FORM NO. 3311-894

TORO®

MODEL NO. 20785-2000001 & UP

PARTS CATALOG

21" S.P. REAR BAGGER

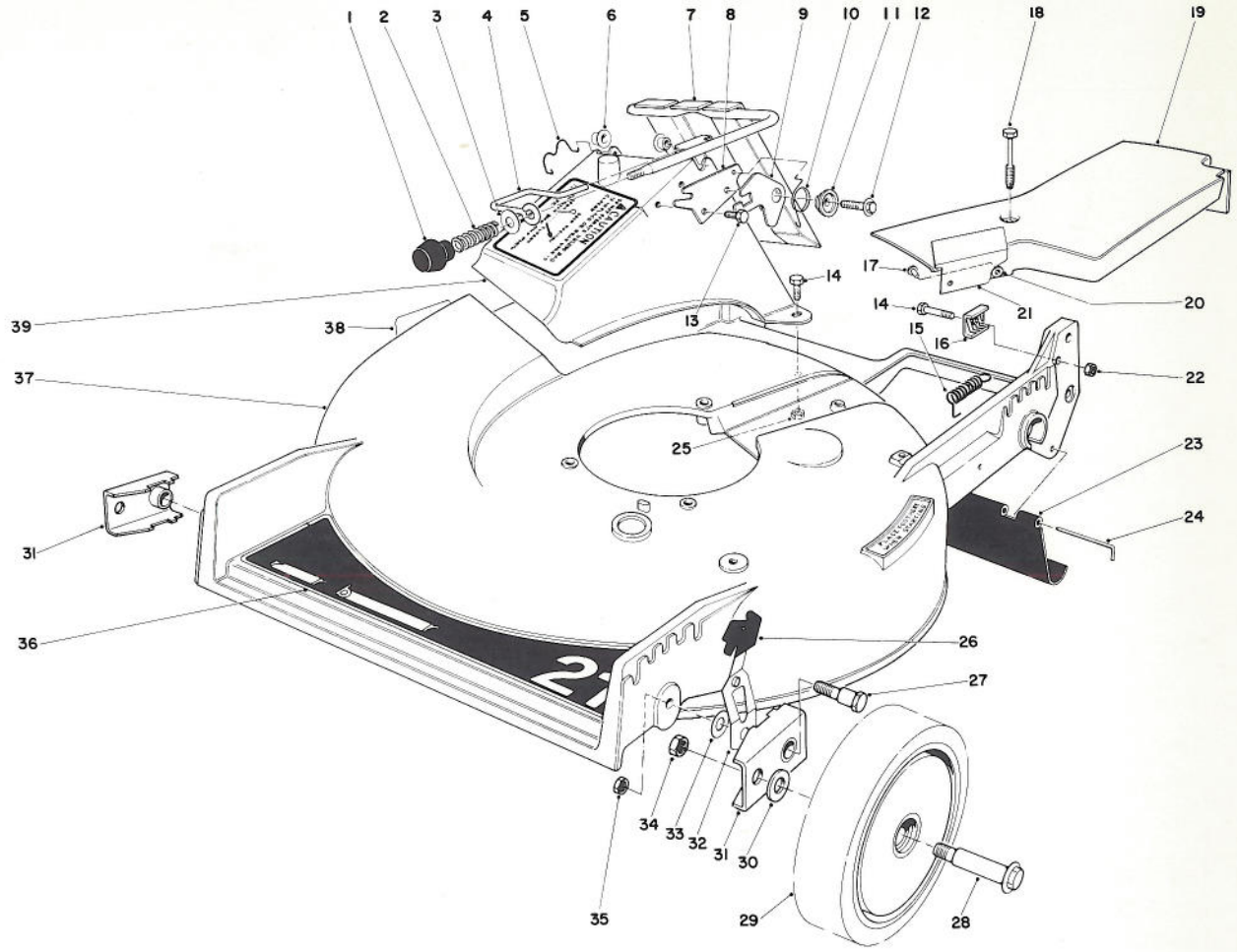

HOUSING ASSEMBLY

Ref. No.	Part No.	Description	No. Used
1	233-37	Knob	1
2	23-0920	Spring – Compression	1
3	3256-25	Washer	1
4	23-0940	Door Latch	1
5	33-4830	Door Retainer	1
6	23-0880	Bushing	2
7	33-5660	Door	1
8	23-1040	Latch Plate	1
9	42-4010	Safety Latch	1
10	33-4860	Spring – Torsion	1
11	43-4840	Spacer Latch	1
12	11-9760	Thread Forming Screw	1
13	32104-17	Screw Hex. Hd. Self Tapping	1
14	321-7	Capscrew	3
15	38-0040	Spring – Tension	1

Ref. No.	Part No.	Description	No. Used
16	29-9550	Cable Clamp	1
17	3295-35	Rivet	2
18	37-7260	Screw	2
19	38-8741	Belt Cover (Incl. Ref. #17 & 20-21)	1
20	3256-14	Washer	2
21	38-8730	Heat Shield	1
22	3218-1	Jam Nut	1
23	44-0580	Rear Shield	1
24	33-3208	Rod – Shield	1
25	3296-42	Locknut	2
26	25-7740	Knob Arm	2
27	44-5270	Pivot Screw	2
28	27-6230	Wheel Bolt	2
29	44-0560	Wheel & Tire Assembly	2

COPYRIGHT © ALL RIGHTS RESERVED

The Toro Company – 1982
MINNEAPOLIS, MN 55420 – U.S.A.

PRICE $1.00

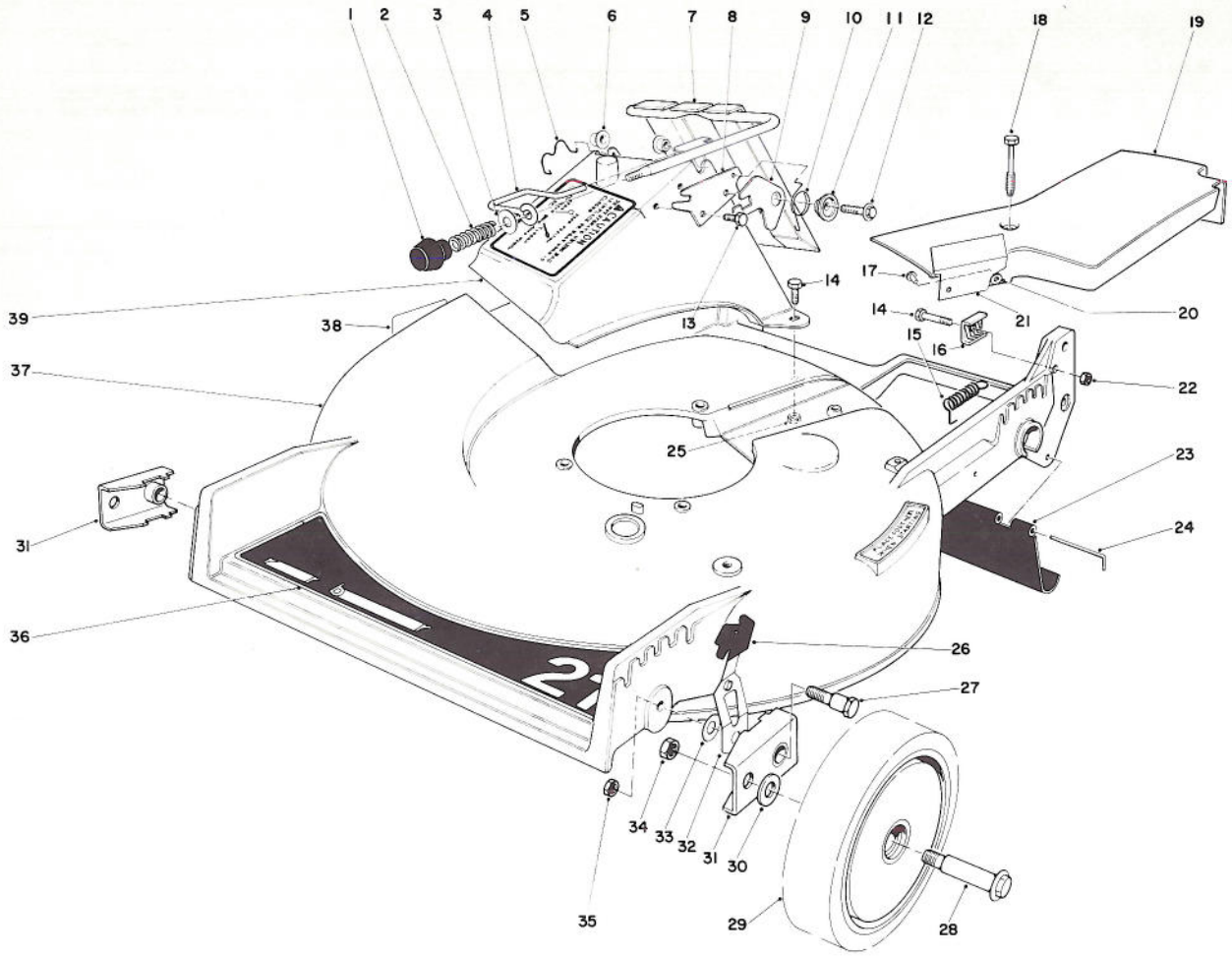

HOUSING ASSEMBLY (Continued)

Ref. No.	Part No.	Description	No. Used
30	40-1940	Washer – Wheel Bolt	2
31	42-2430	Pivot Arm	2
32	44-0990	Spring Arm	2
33	5-4460	Pivot Washer	2
34	32146-6	Nut	2

Ref. No.	Part No.	Description	No. Used
35	32146-5	Nut	2
36	44-0450	Decal – Rear Bagger	1
37	11-0199	Housing (Incl. Ref. #38)	1
38	39-5770	Decal – Danger	1
39	36-1350	Discharge Chute	1

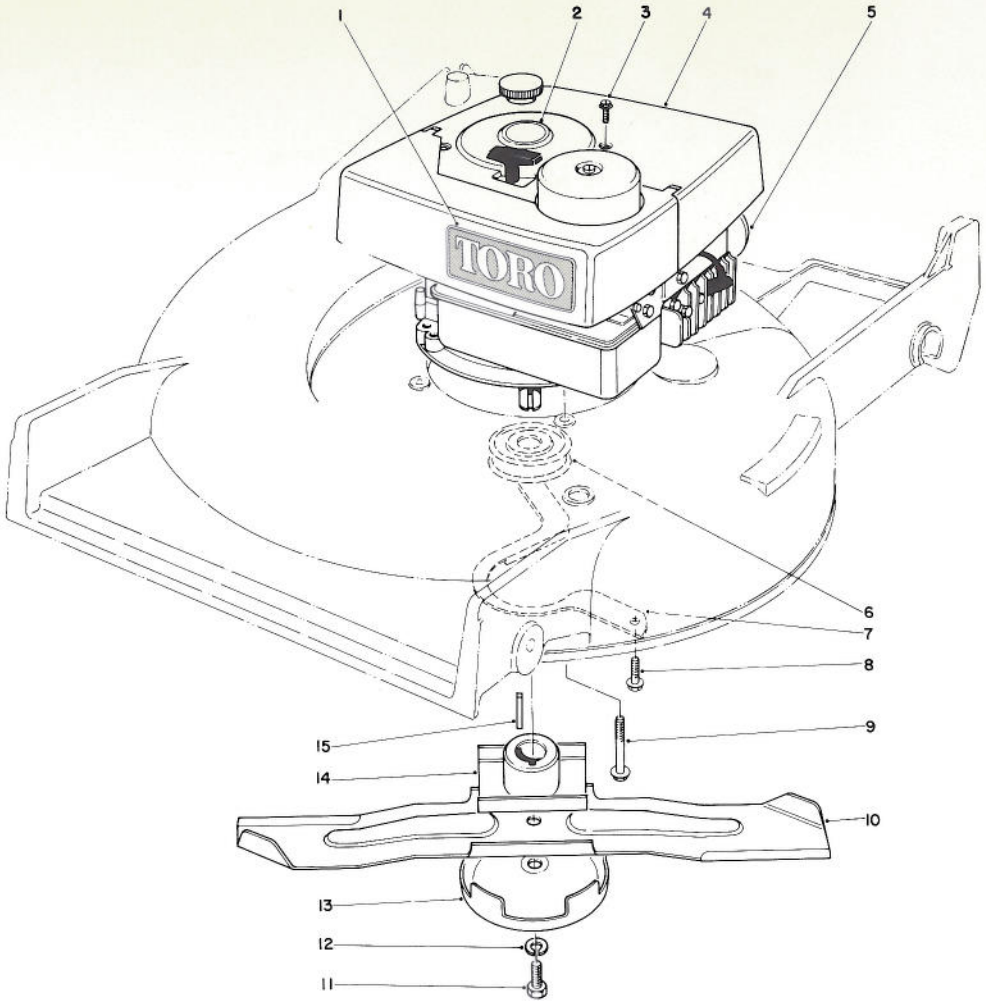

ENGINE ASSEMBLY

Ref. No.	Part No.	Description	No. Used
1	44-0510	Decal Toro	1
2	38-0790	Decal 4 Cycle	1
3	32144-60	Screw Self Tapping	4
4	37-9831	Shroud	1
5	221-603	Engine	1
6	21-5580	Pulley	1
7	39-1840	Belt Guide	1
8	11-9760	Thread Forming Screw	2

Ref. No.	Part No.	Description	No. Used
9	11-0590	Screw	3
10	26-0880	Blade	1
11	26-0670	Blade Screw	1
12	3253-22	Lockwasher	1
13	8-4240	Anti Scalp Cup	1
14	26-0770	Blade Retainer	1
15	27-6300	Square Key	1

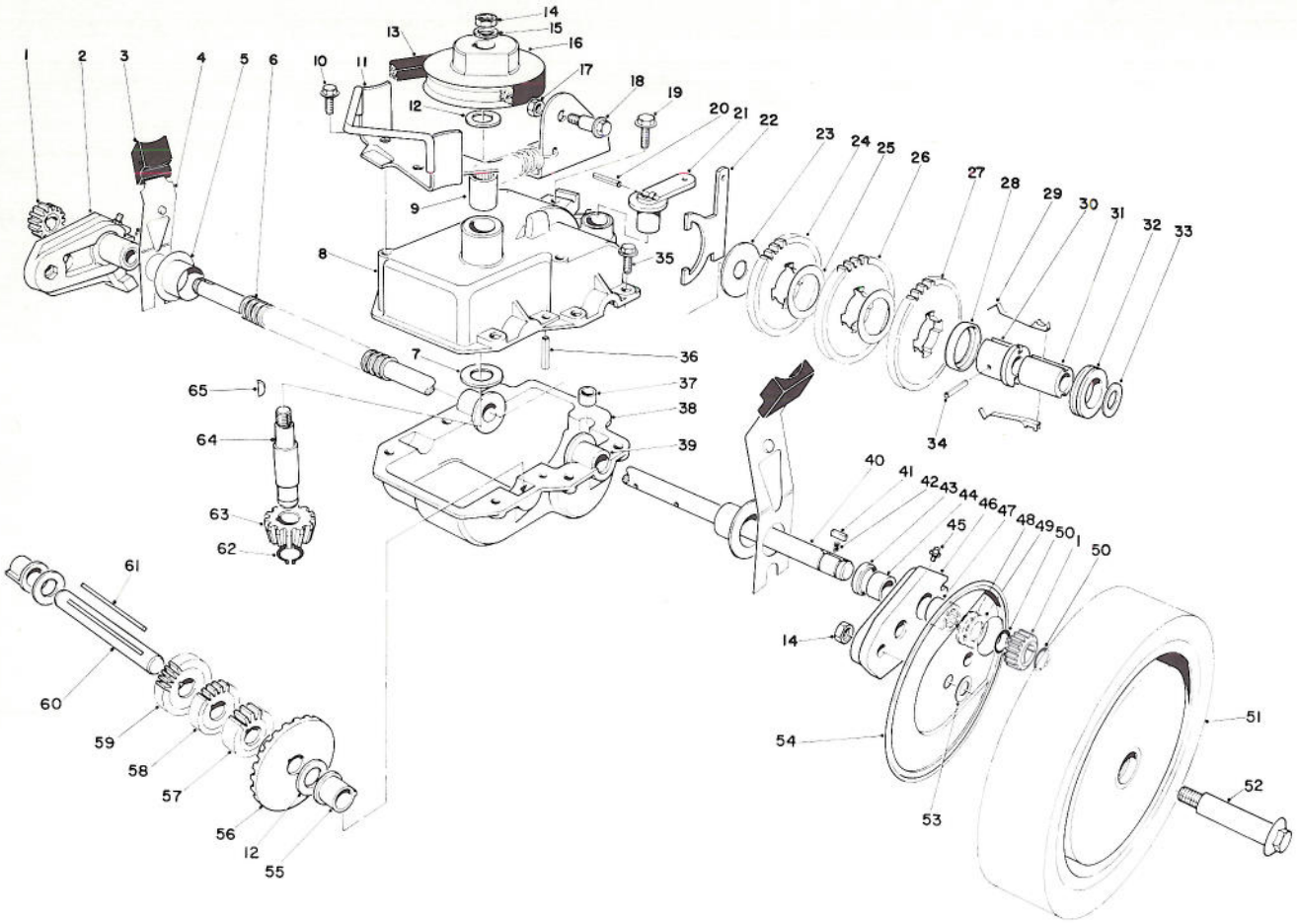

GEAR CASE ASSEMBLY

Ref. No.	Part No.	Description	No. Used
1	39-9160	Pinion	2
2	29-9590	Pivot Arm Assy. R.H. (Incl. Ref. #43-45 & 47)	1
3	25-7740	Knob – Arm	2
4	44-1010	Spring Arm	2
5	42-3520	End Cap	2
6	24-7922	Drive Shaft Cover	1
7	256-196	Washer – Thrust	1
8	39-7282	Upper Gear Case	1
9	252-99	Bearing	1
10	12-3270	Hex Head Screw	2
11	40-9730	Belt Guide Bracket	1
12	36-4790	Washer	3
13	36-8070	Belt	1
14	32146-6	Locknut	3
15	3256-45	Washer	1
16	39-6740	Pulley	1
17	32152-4	Nut	1
18	43-7260	Shoulder Bolt	1
19	32144-11	Screw – Thread Forming	1
20	32121-99	Slotted Roll Pin	1
21	29-9560	Shift Lever	1
22	29-9520	Shift Yoke	1
23	29-9690	Washer	1
24	42-4740	Gear – 38 Tooth	1

Ref. No.	Part No.	Description	No. Used
25	36-4770	Spacer – Gear	2
26	42-4730	Gear – 40 Tooth	1
27	29-9271	Gear – 42 Tooth	1
28	39-7830	Key Retainer	1
29	39-6470	Key	2
30	39-6730	Sleeve Body	1
31	39-6720	Sleeve	1
32	29-9340	Shift Collar	1
33	36-4780	Washer	1
34	32121-106	Coil Pin	1
35	32144-44	Screw Hex Head	6
36	32121-100	Roll Pin	1
37	29-9570	Yoke Bushing	1
38	29-9410	Lower Case	1
39	29-9310	Bushing – Output Shaft	2
40	39-9750	Shaft – Output (used on units with serial no. 2000101 thru 2009103)	1
40	44-0850	Shaft – Output (used on units with serial no. 2009104 & up)	1
41	39-9680	Key	2
42	39-9650	Spring – Compression	2
43	253-140	Seal	2
44	256-110	Bushing	2

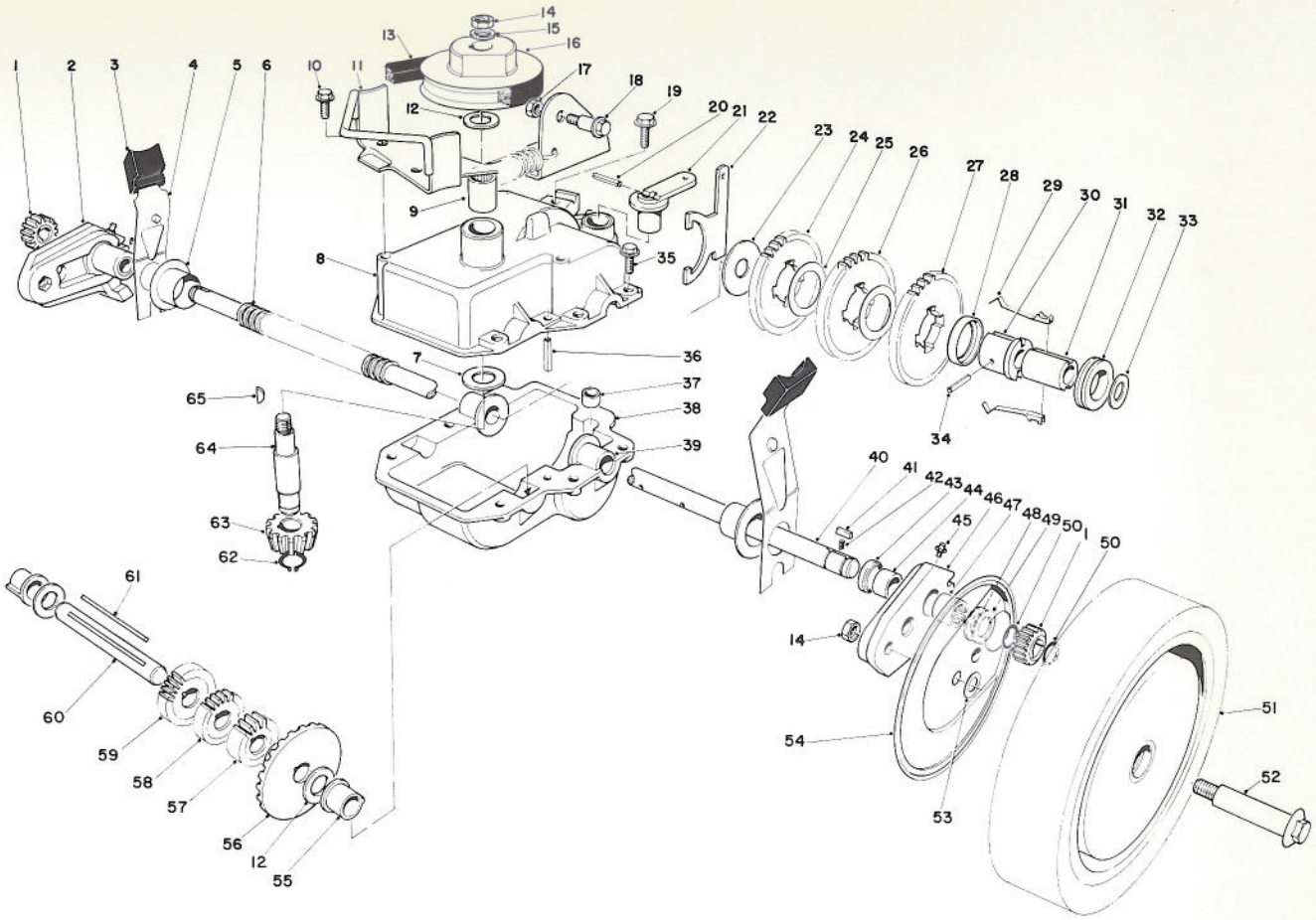

GEAR CASE ASSEMBLY (Continued)

Ref. No.	Part No.	Description	No. Used
45	302-18	Grease Fitting	2
46	29-9640	Pivot Arm Assy. L.H. (Incl. Ref. #43-45 & 47)	1
47	252-96	Needle Bearing	2
48†	252-73	Thrust Washer – INNER	2
49	46-2840	Washer – Thrust – OUTER	2
50	32151-61	Retaining Ring (used on units with serial no. 2000101 thru 2009103)	4
50	32151-68	Retaining Ring (used on units with serial no. 2009104 & up)	4
51	44-0570	Wheel & Tire Assy.	2
52	27-6230	Wheel Bolt	2
53	40-1940	Washer – Wheel Bolt	2
54	44-0600	Wheel Cover	2
55	29-9350	Bushing – Intermediate	2
56	39-6670	Gear – Bevel	1
57	39-6630	Gear – 14 Tooth	1
58	39-6640	Gear – 16 Tooth	1
59	39-6650	Gear – 18 Tooth	1
60	39-6680	Shaft – Intermediate	1
61	39-7840	Key – Square	1
62	32151-57	Retaining Ring	1
63	39-6660	Pinion – Bevel	1
64	39-6690	Shaft – Input	1
65	3257-1	Key – Woodruff	2
*	39-5802	Gear Case Assy. – Complete (used on units with serial No. 2000101 thru 2009103)	1
*	39-5805	Gear Case Assy. – Complete (used on units with serial no. 2009104 & up)	1

*Not Illustrated

†Note: Qty. 4 used on units with serial no. 2000101 thru 2009103.
Qty. 2 used on units with serial no. 2009104 & up.

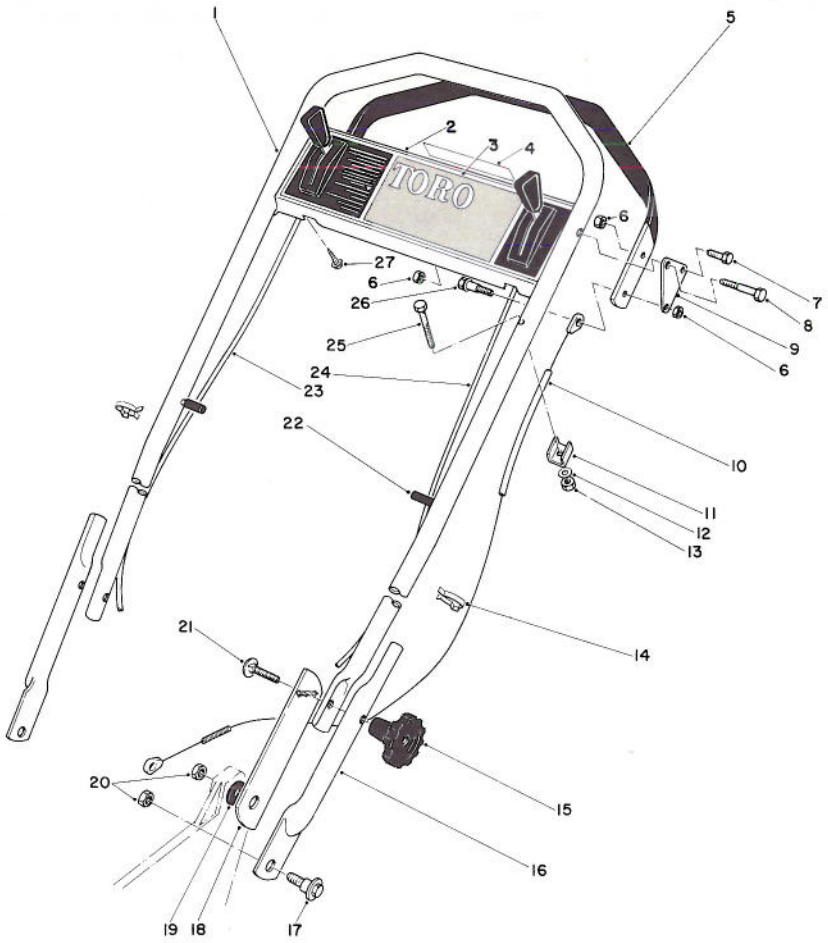

HANDLE ASSEMBLY

Ref. No.	Part No.	Description	No. Used
1	40-4860	Upper Handle	1
2	11-1959	Control Plate (Incl. Ref. #3)	1
3	42-3670	Decal – Control Panel	1
4	41-8060	Decal – Select-A-Pace	1
5	40-4840	Demand Handle	1
6	32152-4	Nut – Lock	6
7	321-3	Capscrew	3
8	36-2250	Bolt – Shoulder	2
9	40-4850	Bracket – Demand	2
10	29-9502	Demand Handle Cable	1
11	29-9550	Cable Clamp	1
12	3256-1	Washer	1
13	3296-42	Nut – Lock	1
14	218-465	Clip	2

Ref. No.	Part No.	Description	No. Used
15	19-4050	Handle Knob	2
16	29-9160	Lower Handle	2
17	27-7211	Bolt – Shoulder	4
18	44-0590	Handle Latch	2
19	27-6510	Spacer – Handle Latch	2
20	32146-5	Nut	4
21	3230-5	Bolt – Carriage	2
22	2410-49	Cap – Vinyl	2
23	42-3922	Ground Speed Control	1
24	42-3910	Throttle Control	1
25	321-9	Capscrew	1
26	43-7260	Bolt – Shoulder	1
27	32104-76	Screw Self Tapping	2
*	11-2109	Loose Parts	1

*Not Illustrated

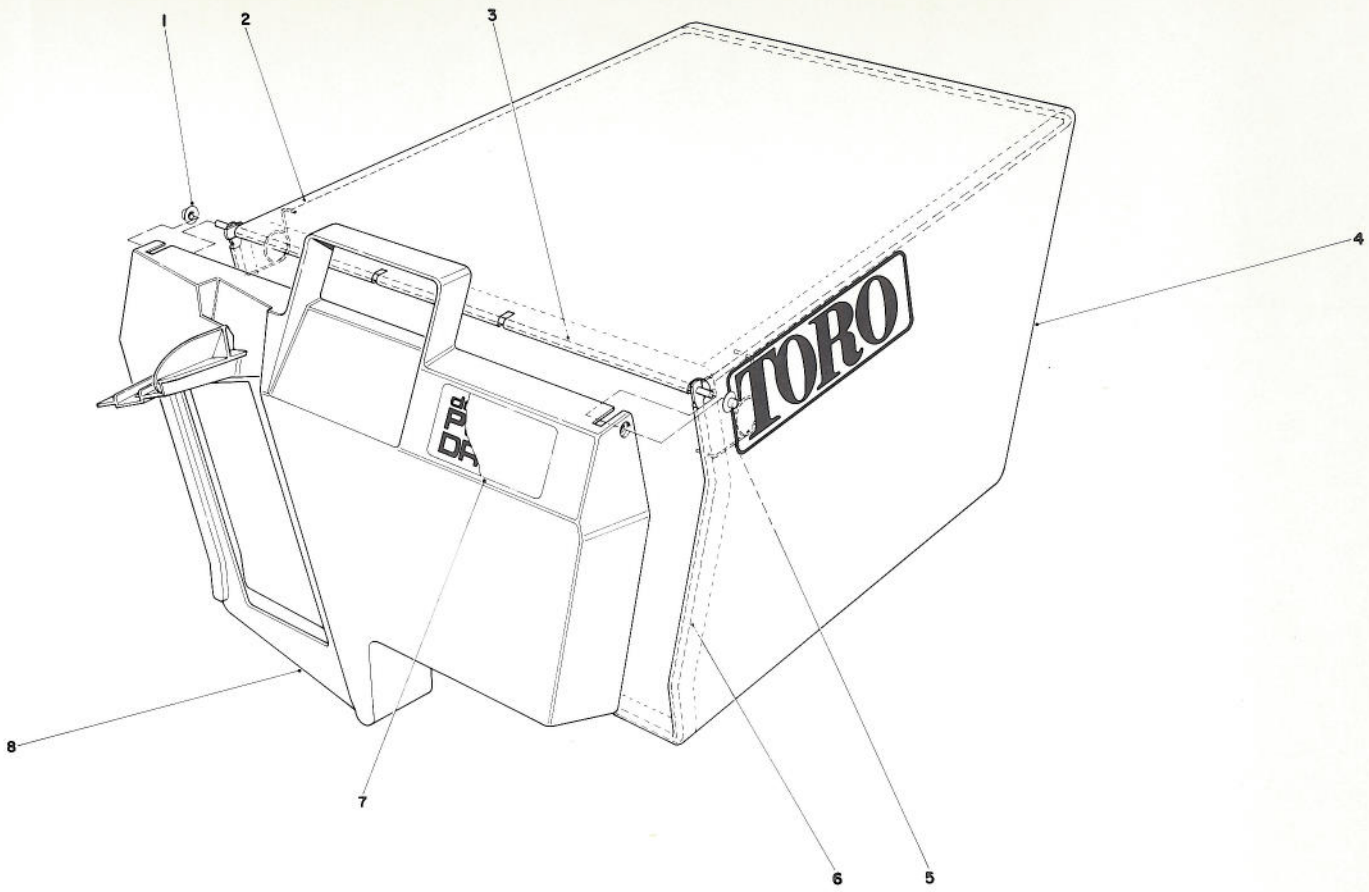

GRASS BAG ASSEMBLY NO. 11-0189

Ref. No.	Part No.	Description	No. Used
1	3290-422	Push Nut	2
2	42-4030	Bag Frame Upper	1
3	33-4820	Hinge Bag Door	1
4	8-2759	Grass Bag	1

Ref. No.	Part No.	Description	No. Used
5	36-6910	Spring	2
6	42-4020	Frame Bag	1
7	40-2240	Decal Bag Door	1
8	37-1390	Door Grass Bag	1

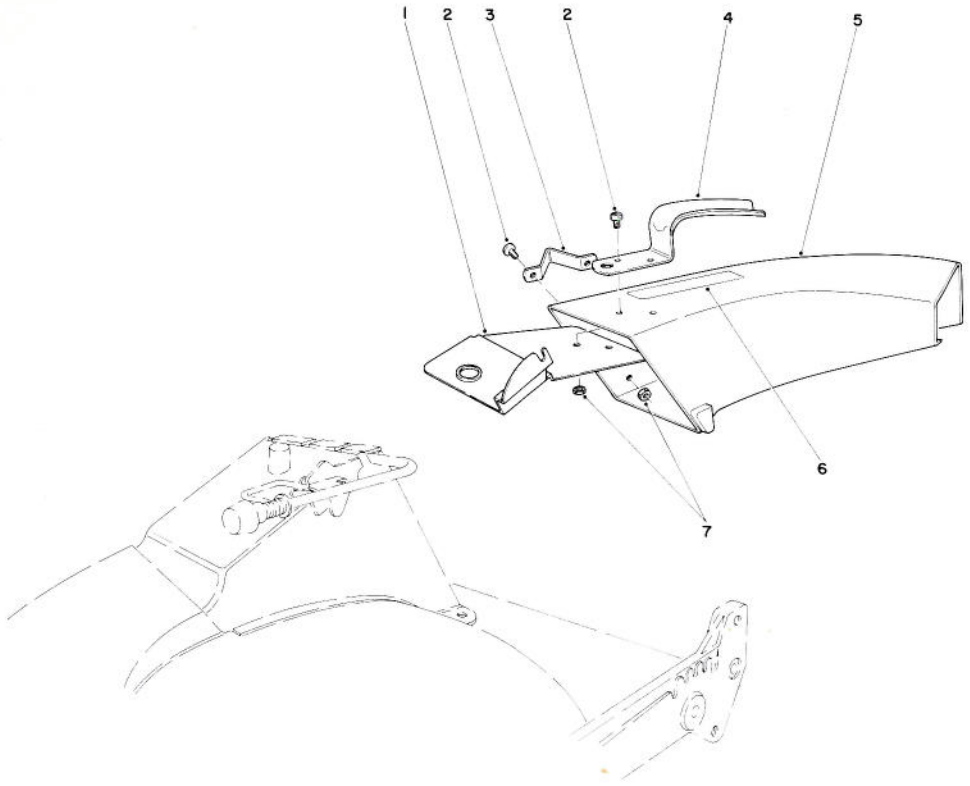

SIDE DISCHARGE CHUTE MODEL NO. 59108 (Optional)

Ref. No.	Part No.	Description	No. Used
1	44-2330	Plate – Discharge Chute	1
2	3251-3	Screw	4
3	46-6580	Bracket	1
4	42-1340	Handle – Grass Chute	1

Ref. No.	Part No.	Description	No. Used
5	44-7720	Chute Assembly (Incl. Ref.#1-6)	1
6	39-9120	Decal – Caution	1
7	3296-12	Locknut	4

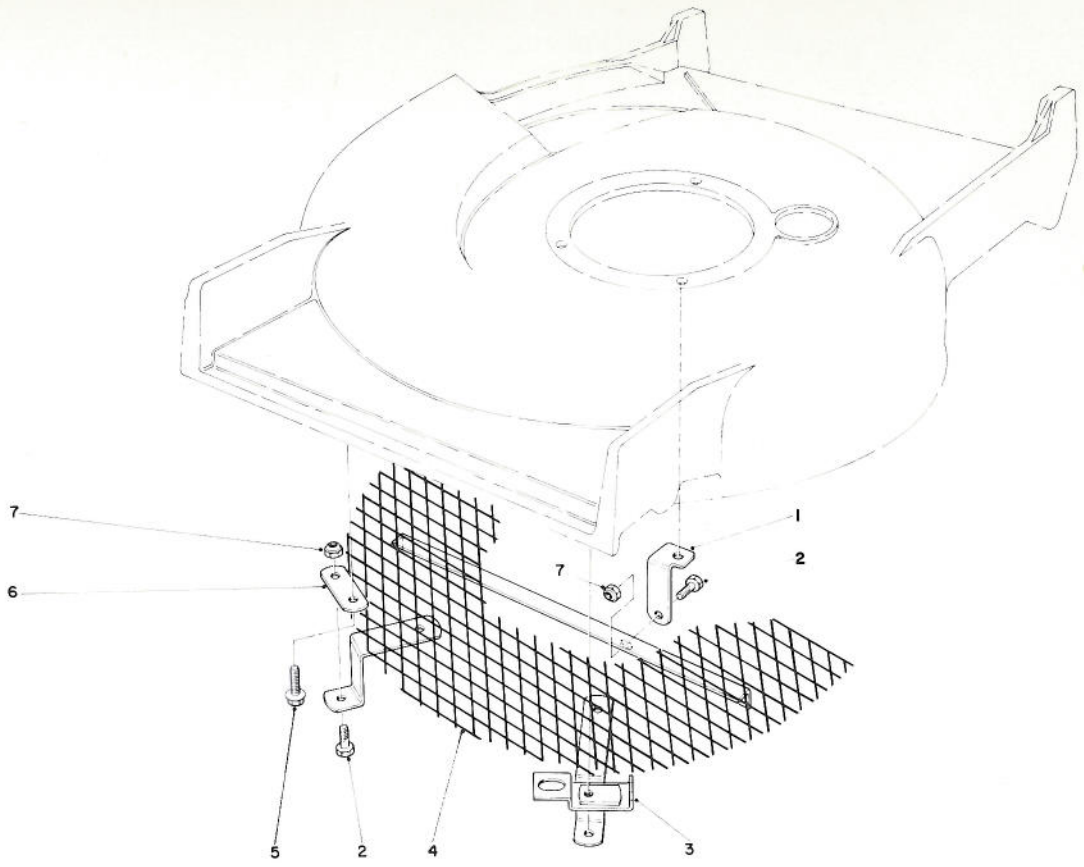

LEAF SHREDDER KIT MODEL NO. 59105 (Optional)

Ref. No.	Part No.	Description	No. Used
1	40-5040	Support Bracket	1
2	321-3	Hex Head Capscrew	3
3‡	46-4880	Mounting Bracket	2
4	39-1290	Screen	1

Ref. No.	Part No.	Description	No. Used
5	32144-11	Screw – Self Tapping	2
6†	39-9690	Anchor	2
7	3296-42	Locknut	3

†Note: Used on units without 1/2" cut out on front of housing.
‡Note: Used on units with 1/2" cut out on front of housing.

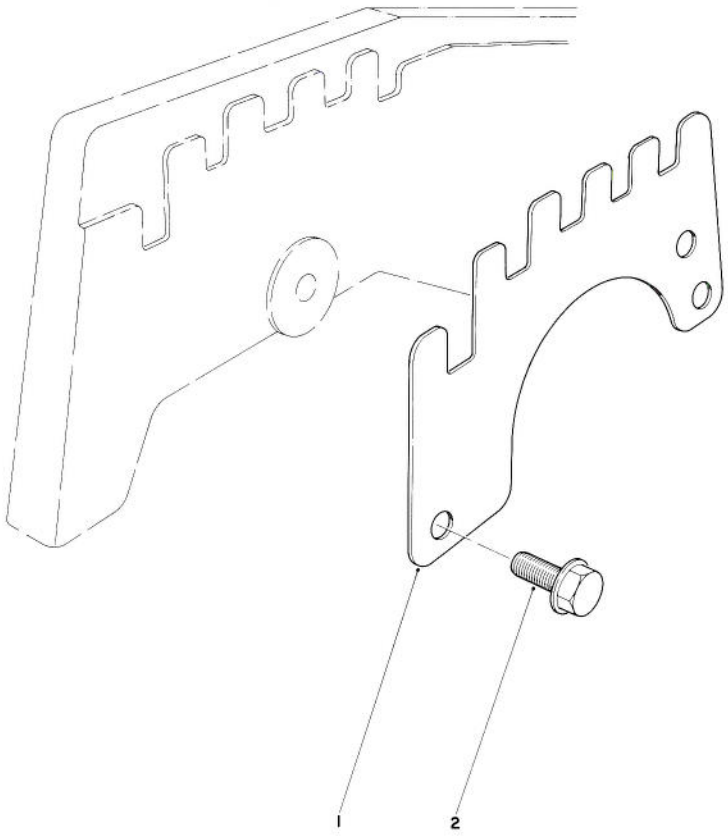

WEAR PLATE KIT NO. 44-5530 (Optional)

Ref. No.	Part No.	Description	No. Used
1	43-5050	Wear Plate	4

Ref. No.	Part No.	Description	No. Used
2	12-3270	Screw – Thread Forming	8

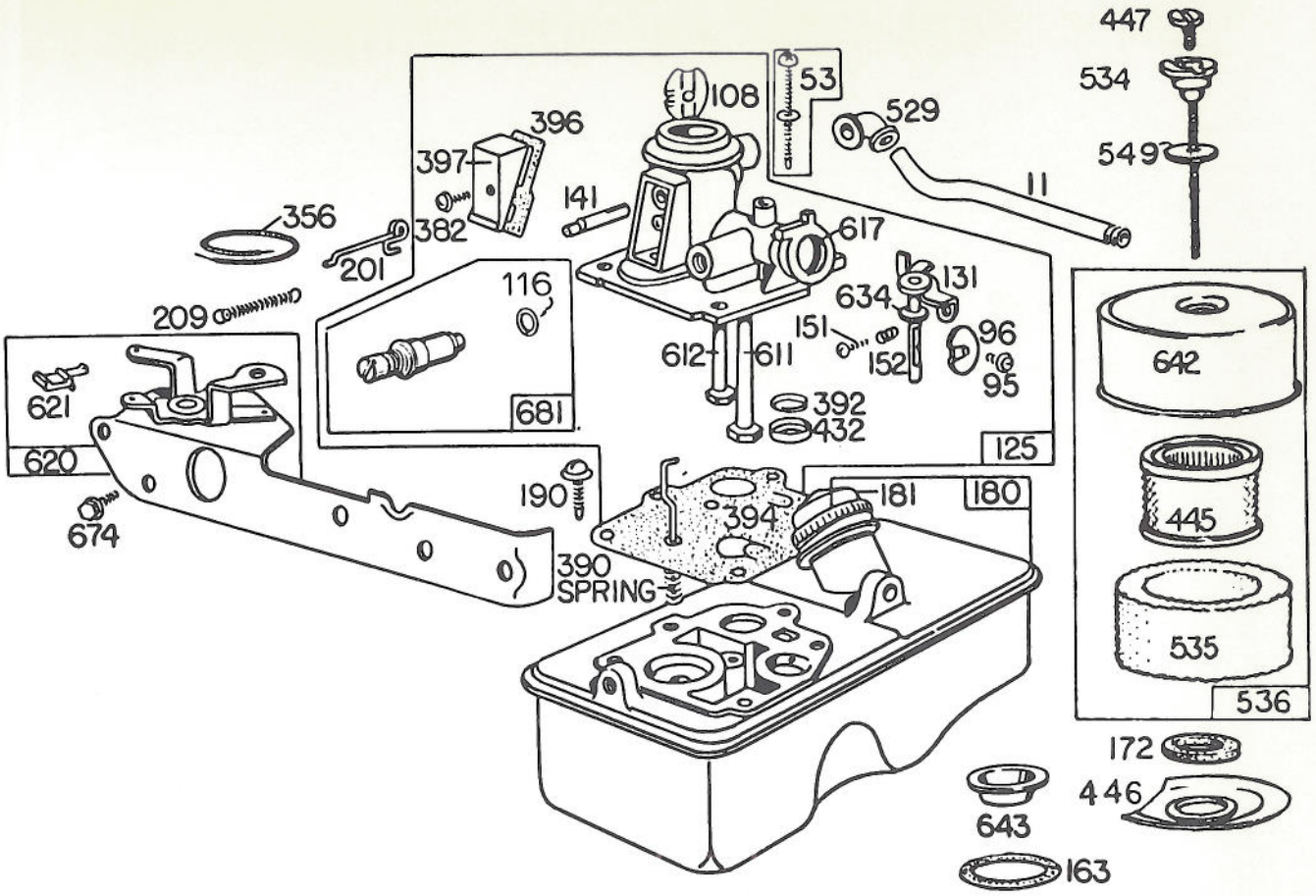

CARBURETOR ASSEMBLY MODEL NO. 110908-0380-02

Ref. No.	Part No.	Description	No. Used
11	231043	Tube – Breather	1
53	391982	Screw – Tank To Carburetor	1
95	93499	Screw – Throttle Valve Mounting	1
96	211237	Valve – Throttle	1
108	280178	Valve – Choke	1
116	280203	O-Ring	1
125	394065	Carburetor Assembly	1
131	299977	Shaft & Lever – Throttle	1
141	68908	Shaft – Choke	1
151	93524	Screw – Rd. Hd.	1
152	260746	Spring – Throttle Adj.	1
163	271139	Gasket – Air Cleaner Mtg.	1
172	271077	Gasket – Air Cleaner	1
180	391694	Tank Assembly – Fuel	1
181	391494	Cap – Fuel Tank	1
190	93440	Screw – Fuel Tank Mtg.	1
201	261027	Link – Governor	1
209	261419	Spring – Governor	1
356	298479	Wire – Ground	1
382	93545	Screw – Choke Link Cover	1
390	261249	Spring – Diaphragm	1
392	260455	Spring – Fuel Pump Diaphragm	1

Ref. No.	Part No.	Description	No. Used
394	391643	Diaphragm – Carburetor	1
396	270571	Gasket – Choke Link Cover	1
397	211678	Cover – Choke Link	1
432	221377	Cap – Spring	1
445	392308	Cartridge – Air Cleaner	1
446	222593	Base – Air Cleaner	1
447	93817	Screw – Cover Mtg.	1
529	67838	Grommet – Breather	1
534	93818	Screw – Air Cleaner (Internal)	1
535	270979	Element – Air Cleaner	1
536	392368	Cleaner Assembly – Air	1
549	270978	Washer (Below Internal Screw Head)	1
611	297219	Pipe – Fuel (Long)	1
612	296811	Pipe – Fuel (Short)	1
617	270344	Seal – Fuel Intake Tube	1
620	391442	Plate – Carburetor Control	1
621	297472	Switch – Stop	1
634	270167	Washer – Throttle Shaft (Felt)	1
642	222626	Cover – Air Cleaner	1
643	222594	Cup – Air Cleaner	1
674	93559	Screw – Tank To Bracket	1
681	395508	Needle – Valve Kit	1

ENGINE BRIGGS & STRATTON MODEL NO. 110908-0380-02

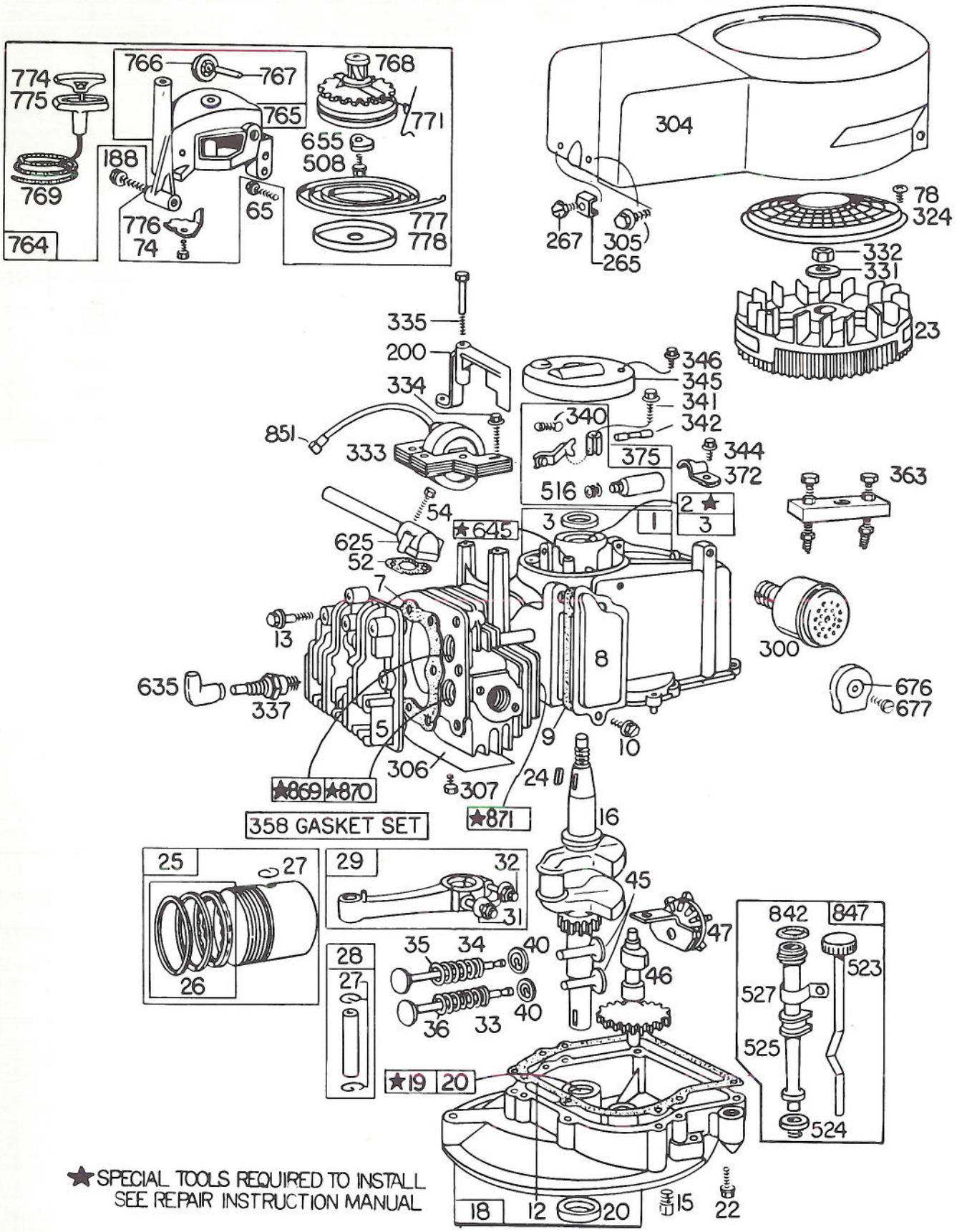

ENGINE BRIGGS & STRATTON MODEL NO. 110908-0380-02

Ref. No.	Part No.	Description	No. Used
1	391639	Cylinder Assembly	1
2	293708	Bushing – Cylinder	1
		Note: Requires Special Tools For Installation.	
3	299819	Seal – Oil	1
5	211851	Head – Cylinder	1
7	*270836	Gasket – Cylinder Hd.	1
8	298383	Breather – Valve Chamber	1
9	*270239	Gasket – Valve Cover	1
10	93394	Screw – Breather	1
12	*270833	Gasket – Crankcase – .015" Thick (Standard)	1
	*270895	Gasket–Crankcase–.005" Thick	1
	*270896	Gasket–Crankcase–.009"Thick	1
13	93111	Screw – Cylinder Hd. (1-15/16" Long)	1
15	91084	Plug – Oil Drain	1
16	261353	Crankshaft	1
18	392381	Sump – Oil	1
19	293709	Bushing – Oil Sump	1
		Note: Requires Special Tools For Installation.	
20	391483	Seal – Oil	1
22	93032	Screw – Sump Mtg.	1
23	391488	Flywheel – Magneto	1
24	61760	Key – Flywheel	1
25	391650	Piston Assy. – Standard	1
	391651	Piston Assy. – .010" O.S.	1
	391652	Piston Assy. – .020" O.S.	1
	391653	Piston Assy. – .030" O.S.	1
		PISTON RING SETS:	
26	391654	Ring Set – Standard Piston	1
	391656	Ring Set – .010" O.S. Piston	1
	391658	Ring Set – .020" O.S. Piston	1
	391660	Ring Set – .030" O.S. Piston	1
27	26026	Lock – Piston Pin	1
28	391649	Pin Assembly – Piston – Std.	1
29	391640	Rod Assembly – Connecting	1
31	222390	Lock – Connecting Rod Screw	1
32	93670	Screw – Connecting Rod	1
33	212004	Valve – Exhaust	1
34	261233	Valve – Intake	1
35	260552	Spring – Intake Valve	1
36	26478	Spring – Exhaust Valve	1
40	93312	Retainer – Valve Spring Used W/Valves W/Groove In Stem.	1
45	261250	Tappet – Valve	1
46	212021	Gear – Cam	1
47	294652	Oil Slinger Gear & Bracket	1
52	*270844	Gasket – Intake Elbow	1
54	93485	Screw – Intake Elbow Mtg.	1
65	93587	Screw – Vertical Pull Starter Mounting	1
74	93490	Screw	1
78	93758	Screw – Screen Mtg.	4
188	93585	Screw – Fuel Tank & Starter Mounting	1
200	68388	Blade – Governor	1
265	22372	Clamp – Casing	1
267	93469	Screw – Clamp Mtg.	1
300	394569	Muffler – Exhaust	1
304	391636	Housing – Blower	1
305	93559	Screw – Blower Housing Mounting	1
306	222394	Shield – Cylinder	1
307	93490	Screw – Cylinder Shield Mounting	1
324	280140	Screen – Rotating	1

*Included in Gasket Set Part No. 391662.

Ref. No.	Part No.	Description	No. Used
331	220865	Washer – Flywheel	1
332	92284	Nut – Flywheel	1
333	298502	Armature – Magneto	1
334	93381	Screw – Armature Mtg.	1
335	93435	Screw – Armature & Governor Blade	1
337	293918	Plug – Spark (With Gasket) 1-1/2" High – (Resistor Type) Note: Spark Plugs Use Ignition Cable Terminal No. 221798	1
340	26018	Spring – Breaker Arm	1
341	93381	Screw – Breaker Arm Mounting	1
342	65704	Plunger – Breaker Point	1
344	93042	Screw – Condenser Clamp Mounting	1
345	220366	Cover – Breaker Point & Condenser	1
346	93705	Screw – Dust Cover Mounting	1
358	391662	Gasket Set	1
363	19069	Puller – Flywheel (Optional Accessory)	1
372	220477	Clamp – Condenser	1
375	294628	Breaker Points & Condenser Set Note: 299061 Ignition Kit Includes: 294628 Point Set 65704 Plunger 61760 Key – Flywheel	1
508	93158	Screw	1
516	260374	Spring – Connector	1
523	391838	Cap With Dipstick – Oil Filler Note: For Complete Oil Fill Cap With Dipstick And Oil Filler Tube Assembly – Order Part 392056.	1
524	68838	Seal – Filler Tube	1
525	280131	Tube – Oil Filler	1
527	222549	Clamp – Oil Filler Tube	1
625	391377	Tube – Fuel Intake	1
635	66538	Elbow – Spark Plug	1
645	23513	Bushing – Plunger	1
655	222057	Anchor – Spring	1
676	222522	Deflector – Muffler	1
677	93705	Screw – Muffler Deflector	1
764	391486	Starter Assy. – Vertical Pull	1
765	299947	Housing – Vertical Pull Starter	1
766	280022	Pulley – Rope (Small)	1
767	231048	Pin – Small Rope Pulley	1
768	299948	Pulley & Gear Assembly – Starter (50" Rope)	1
769	66734	Rope – Vert. Pull Starter (50")	1
771	299961	Clip – Vertical Pull	1
774	280121	Insert – Starter Handle	1
775	280036	Grip – Starter Rope	1
776	222049	Guide – Rope	1
777	390066	Spring – Vertical Pull Starter	1
778	280021	Cover – Vertical Pull Starter Pulley	1
842	270920	Seal – Filler Cap	1
847	392056	Filler Group – Oil	1
851	221798	Terminal – Ignition Cable	1
869	210879	Seat – Intake Valve (Std.)	1
870	211291	Seat – Exhaust Valve (Std.)	1
871	63709	Guide – Exhaust Valve	1

PRODUCT CHANGES

In an effort to make improvements available to TORO owners as quickly as possible, minor changes are incorporated into Toro's products from time to time that do not become immediately shown in the Parts Catalog. If such a change apparently has been made in your unit, which is not reflected in your manual, see your TORO Distributor or his Authorized TORO Service Dealer for information and part numbers.

IDENTIFICATION AND ORDERING

MODEL AND SERIAL NUMBERS

The Mower has two identification numbers: a model number and a serial number. The two numbers are stamped on a decal which is located on the mower housing between the rear wheels. In any correspondence concerning the mower, supply model and serial numbers to assure that correct information and replacement parts are obtained.

To order replacement parts from an Authorized TORO Service Dealer, supply the following information:

1. Model and serial numbers of the mower.
2. Part number, description, and quantity of part(s) desired.

Note: Do not order by reference number if a parts catalog is being used; use the PART NUMBER.

The Toro Promise

A ONE YEAR LIMITED WARRANTY

The Toro Company promises to repair your TORO Product if defective in materials or workmanship. The following time periods from the date of purchase apply:

Residential Product . . . . . 1 Year
Residential Products Used Commercially . . . 45 Days

The costs of parts and labor are included, but the customer pays the transportation costs. Just return any residential product to an Authorized TORO Service Dealer or TORO Distributor.

Should you feel your TORO Product is defective and wish to rely on The Toro Promise, the following procedure is recommended:

1. Contact any Authorized TORO Service Dealer, TORO Master Service Dealer, or TORO Distributor (the Yellow Pages of your telephone directory is a good reference source).
2. He will either instruct you to return the product to him or recommend another Authorized TORO Service outlet which might be more convenient.
3. Bring the product along with your original sales slip, or other evidence of purchase date, to the service dealer.
4. The servicing dealer will inspect the unit, advise you whether the product is defective and, if so, make all repairs necessary to correct the defect without extra charge to you.

If for any reason you are dissatisfied with the dealer's analysis of the defect or the service performed, you may contact us.

Write:

TORO Consumer Service Department
8111 Lyndale Avenue South
Minneapolis, Minnesota 55420

The above remedy of product defects through repair by an Authorized TORO Service Dealer is the purchaser's sole remedy for any defect.

THERE IS NO OTHER EXPRESS WARRANTY. ALL IMPLIED WARRANTIES OF MERCHANTABILITY AND FITNESS FOR USE ARE LIMITED TO THE DURATION OF THE EXPRESS WARRANTY.

Some states do not allow limitations on how long an implied warranty lasts, so the above limitation may not apply to you.

This warranty applies only to parts or components which are defective and does not cover repairs necessary due to normal wear, misuse, accidents, or lack of proper maintenance. Regular, routine maintenance of the unit to keep it in proper operating condition is the responsibility of the owner.

All warranty repairs reimbursable under The Toro Promise must be performed by an Authorized TORO Service Dealer using Toro approved replacement parts.

Repairs or attemped repairs by anyone other than an Authorized TORO Service Account are not reimbursable under The Toro Promise. In addition, these unauthorized repair attempts may result in additional malfunctions, the correction of which is not covered by warranty.

THE TORO COMPANY IS NOT LIABLE FOR INDIRECT, INCIDENTAL OR CONSEQUENTIAL DAMAGES IN CONNECTION WITH THE USE OF THE PRODUCT INCLUDING ANY COST OR EXPENSE OF PROVIDING SUBSTITUTE EQUIPMENT OR SERVICE DURING PERIODS OF MALFUNCTION OR NON-USE.

Some states do not allow the exclusion or limitation of incidental or consequential damages, so the above limitation or exclusion may not apply to you.

This warranty gives you specific legal rights, and you may also have other rights which vary from state to state.

COUNTRIES OTHER THAN THE UNITED STATES OR CANADA

Customers who have purchased TORO products exported from the United States or Canada should contact their TORO Distributor (Dealer) to obtain guarantee policies for your country, province or state. If for any reason you are dissatisfied with your Distributor's service or have difficulty obtaining guarantee information, contact the TORO importer. If all other remedies fail, you may contact us at The Toro Company.

Compliance with Radio Interference Regulations Certified.
Certifie Conforme au Reglement sur le Brouillage Radioelectrique.

MAINTENANCE RECORD

Date	Hours Used	Oil Change	Air Cleaner Service	Lubrication	Winter Storage	Spring Service	Spark Plug Gap

MAINTENANCE RECORD

Date	Hours Used	Oil Change	Air Cleaner Service	Lubrication	Winter Storage	Spring Service	Spark Plug Gap

Litho in U.S.A.