FORM NO. 3311-896

TORO®

MODEL NO. 20755 — 2000001 & UP

PARTS CATALOG

21" S.P. REAR BAGGER

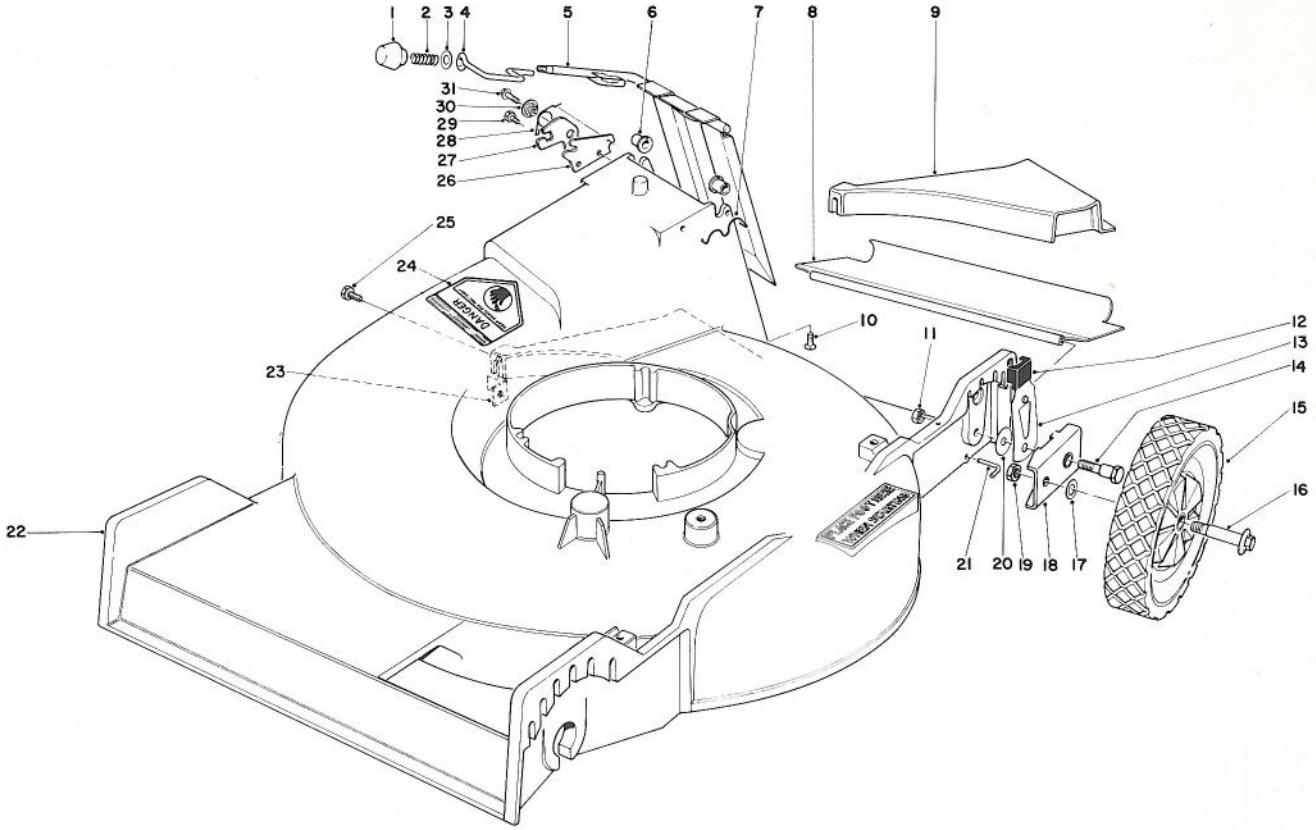

HOUSING ASSEMBLY

Ref. No.	Part No.	Description	No. Used
1	233-37	Knob	1
2	23-0920	Spring Compression	1
3	3256-25	Washer	1
4	23-0940	Latch Door	1
5	43-7900	Door Handle	1
6	23-0880	Bushing	2
7	33-4830	Door Retainer	1
8	23-0560	Rear Shield	1
9	23-0360	Rear Insert	1
10	32144-17	Flat Hd. Screw	2
11	32146-5	Locknut	2
12	25-7740	Knob Arm	2
13	44-1020	Spring Arm	2
14	44-5270	Pivot Screw	2
15	27-6200	Wheel & Tire Assembly	2
16	27-6230	Wheel Bolt	2
17	40-1940	Washer Wheel	2
18	42-2430	Pivot Arm	2
19	32146-6	Locknut	2
20	33-0390	Washer	2
21	33-3202	Rod Shield	1
22	8-9589	Housing (Incl. Ref. #24)	1
23	26-0660	Special Nut	1
24	39-5770	Decal — Danger	1
25	32104-114	Screw Self Tapping	1
26	23-1040	Latch Plate	1
27	42-4010	Safety Latch	1
28	23-1200	Spring Torsion	1
29	32104-17	Screw	1
30	43-4840	Latch Spacer	1
31	11-9760	Screw Thread Forming	1
*	11-2129	Loose Parts	1
*	26-9510	Replacement Stud Kit	1

*Not Illustrated

COPYRIGHT © ALL RIGHTS RESERVED
The Toro Company — 1982
MINNEAPOLIS, MN 55420 — U.S.A.

PRICE $1.00

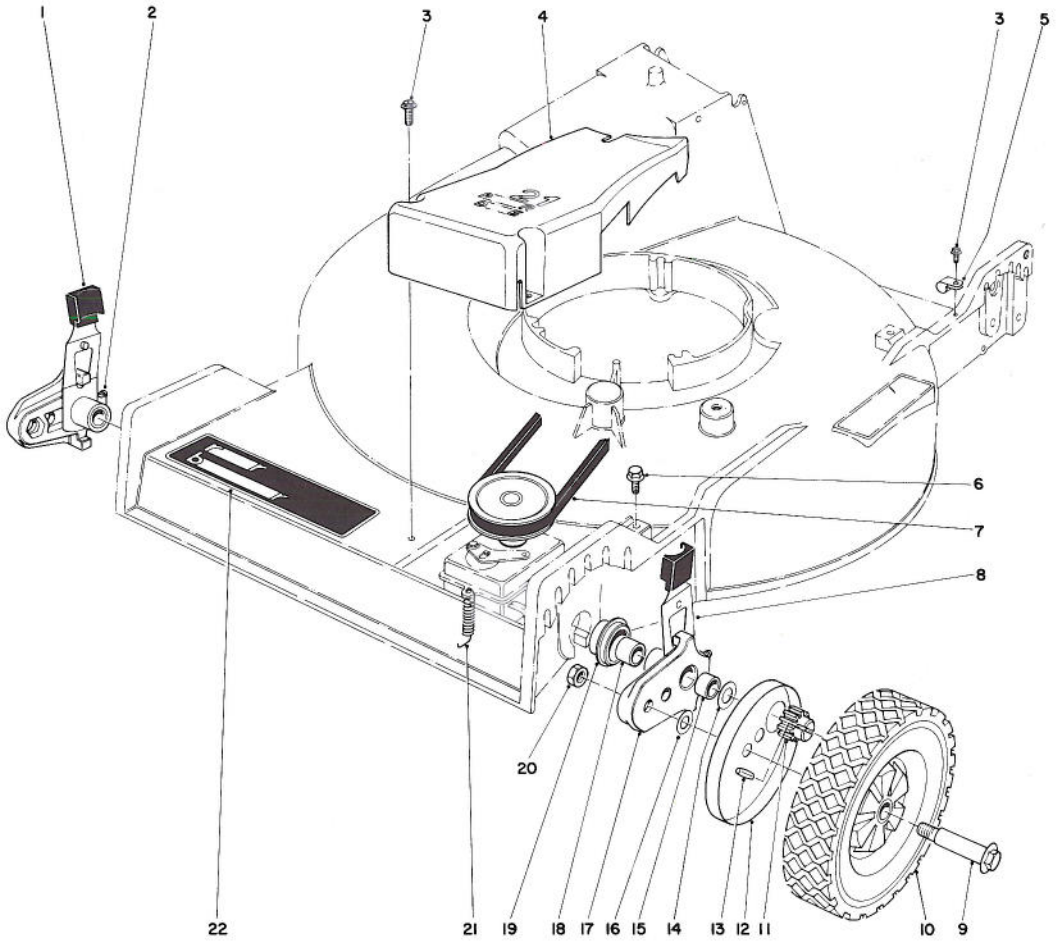

FRONT WHEEL & PIVOT ARM ASSEMBLY

Ref. No.	Part No.	Description	No. Used
1	25-7740	Knob Arm	2
2	302-18	Grease Fitting	2
3	12-5450	Screw Special	3
4	44-0670	Belt Cover	1
5	2412-52	Cable Clamp	1
6	32144-11	Hex Head Screw	1
7	5-4505	V-Belt	1
8	44-1030	Spring Arm	2
9	27-6230	Wheel Bolt	2
10	36-7790	Wheel and Tire Assembly	2
11	42-2400	Pinion Gear	2
12	36-5630	Wheel Cover	2

Ref. No.	Part No.	Description	No. Used
13	32121-98	Coil Pin	2
14	18-9810	Thrust Washer	2
15	256-110	Bushing	2
16	40-1940	Washer Wheel	2
17	42-3510	Pivot Arm Assembly (Incl. Ref. #2, 15 & 18)	2
18	256-263	Bushing	2
19	36-9040	End Cap	2
20	32146-6	Locknut	2
21	17-4490	Spring – Tension	1
22	44-0460	Decal – Rear Bagger	1

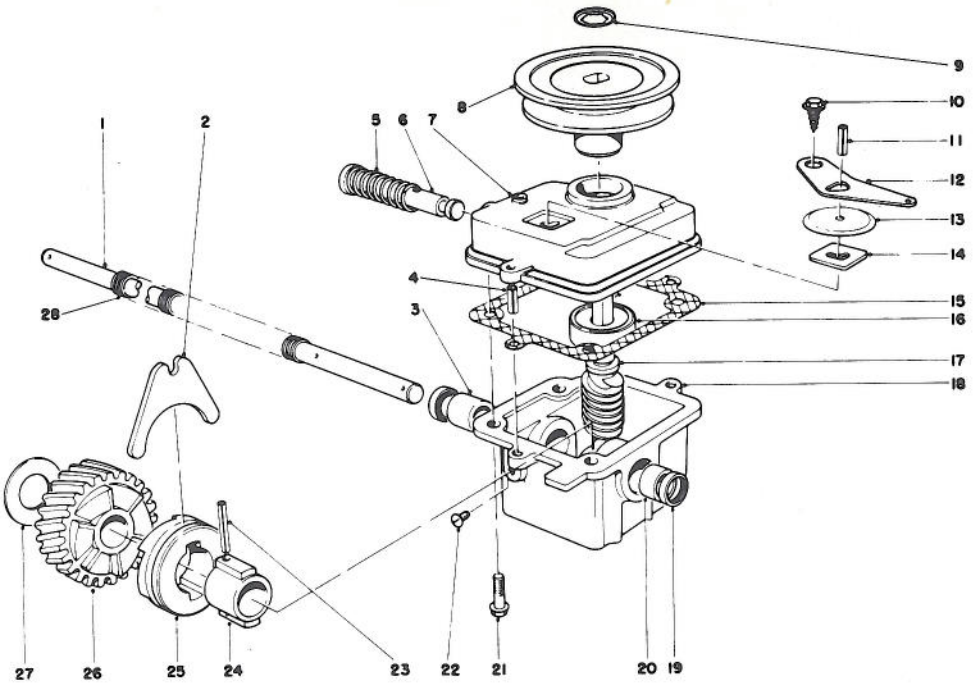

GEAR CASE ASSEMBLY

Ref. No.	Part No.	Description	No. Used
1	37-9440	Drive Shaft	1
2	5-3247	Shifter Fork	1
3	256-263	Bushing	1
4	32121-1	Roll Pin	2
5	3-0731	Spring	1
6	5-3248	Shifter Rod	1
7	39-1100	Cover Gear Case (Used on units with serial no. 2000101 thru 2001333 & 2003097 & up)	1
*	33-2080	Cover Gear Case (used on units with serial no. 2001334 thru 2003096)	1
8	20-2780	Pulley	1
9	3290-346	Push On Retainer	1
10	32140-64	Self Tapping Screw	1
11	32121-23	Roll Pin	1
12	5-3252	Shifter Arm	1
13	3-2615	Transmission Dust Cover	1
14	3-0681	Latch Plate	1
15	36-1000	Gasket – Gear Case	1
16	251-284	Ball Bearing (Used on units with serial no. 2000101 thru 2001333 & 2003097 & up)	1

Ref. No.	Part No.	Description	No. Used
*	251-144	Ball Bearing (Used on units with serial no. 2001334 thru 2003096)	1
17	8-5679	Worm Shaft (Incl. Ref. #26) (Used on units with serial no. 2000101 thru 2001333 & 2003097 & up)	1
*	6-9949	Worm Shaft (Incl. Ref. #26) (Used on units with serial no. 2001334 thru 2003096)	1
18	8-0479	Gear Case (Incl. Ref. #3, 19-20)	1
19	253-140	Oil Seal	2
20	256-110	Bushing	1
21	11-9760	Screw	4
22	28-1550	Screw Nylon	1
23	32121-88	Coil Pin	1
24	3-0721	Sleeve	1
25	19-5660	Clutch Jaw	1
26		Helical Gear	1
27	3-0724	Thrust Washer	1
28	24-8690	Drive Shaft Cover	1
*	8-6879	Gear Case Assembly Complete	1

*Not Illustrated

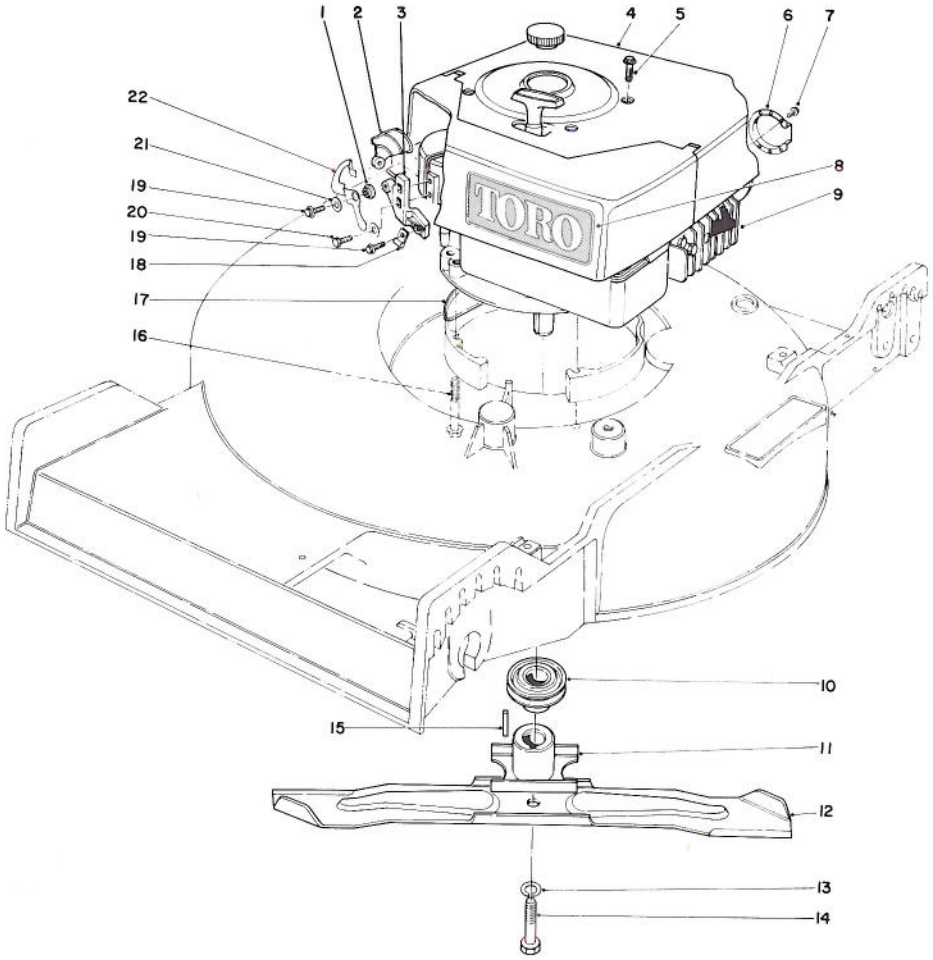

ENGINE ASSEMBLY

Ref. No.	Part No.	Description	No. Used
1	25-0520	Bushing Cam Interlock	1
2	25-0350	Interlock Lever	1
3	27-9280	Cable & Pivot Block	1
4	37-9830	Shroud	1
5	32144-60	Screw	4
6	2210-184	Muffler Deflector	1
7	2210-173	Screws	2
8	44-0510	Decal – Toro	1
9	221-549	Engine	1
10	23-0130	Pulley Driver	1
11	23-0110	Blade Retainer	1

Ref. No.	Part No.	Description	No. Used
12	26-0880	Blade	1
13	3253-22	Lockwasher	1
14	23-0080	Blade Screw	1
15	27-8590	Square Key	1
16	11-0581	Screw	3
17	27-7470	Housing Cap	1
18	2412-63	Clamp	1
19	32104-76	Self Tapping Screw	2
20	32144-19	Hex Hd. Screw	2
21	3256-14	Washer	3
22	25-8150	Cam Interlock	1

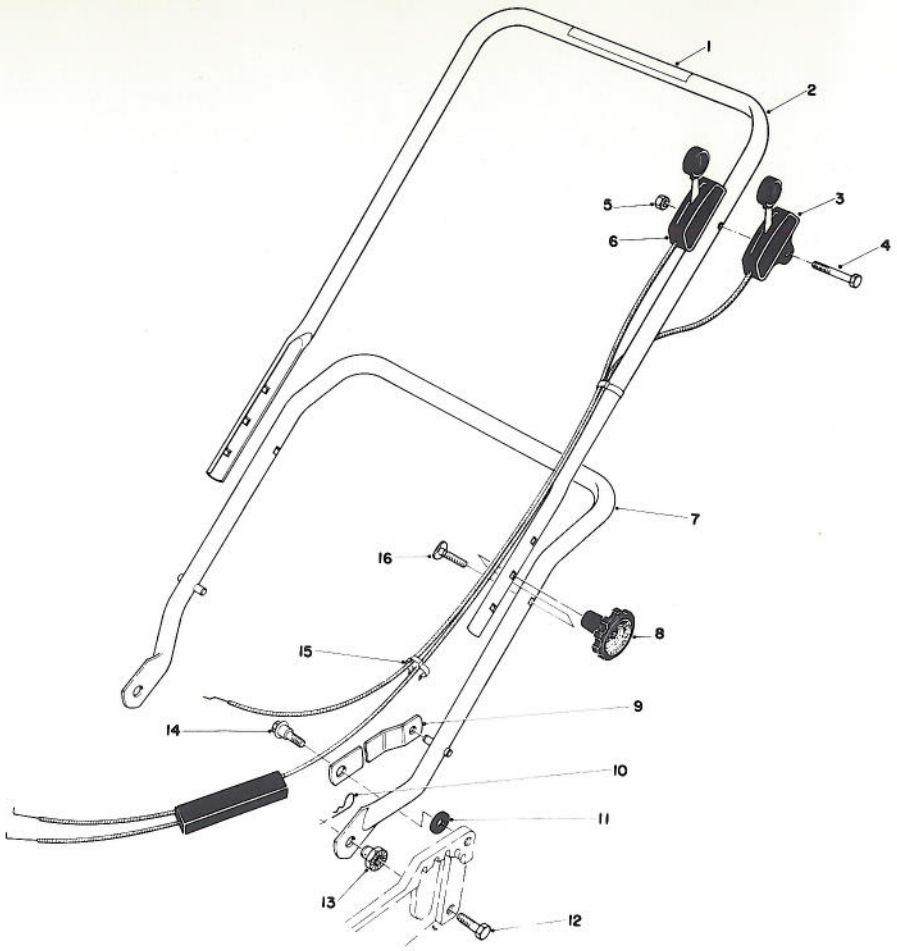

HANDLE ASSEMBLY

Ref. No.	Part No.	Description	No. Used
1	29-6290	Decal — Danger	1
2	11-3029	Upper Handle (Incl. Ref. #1)	1
3	33-2525	Traction Control	1
4	321-15	Capscrew	1
5	32146-17	Locknut	1
6	33-2534	Throttle Control	1
7	33-4340	Lower Handle	1
8	19-4050	Handle Release Knob	2

Ref. No.	Part No.	Description	No. Used
9	26-0760	Handle Latch	2
10	3290-255	Hair Pin Cotter	2
11	27-6510	Spacer Latch	2
12	322-5	Capscrew	2
13	12-2080	Handle Pivot Nut	2
14	5-2490	Shoulder Screw	2
15	218-465	Conduit Clip	2
16	17-9420	Handle Screw	2

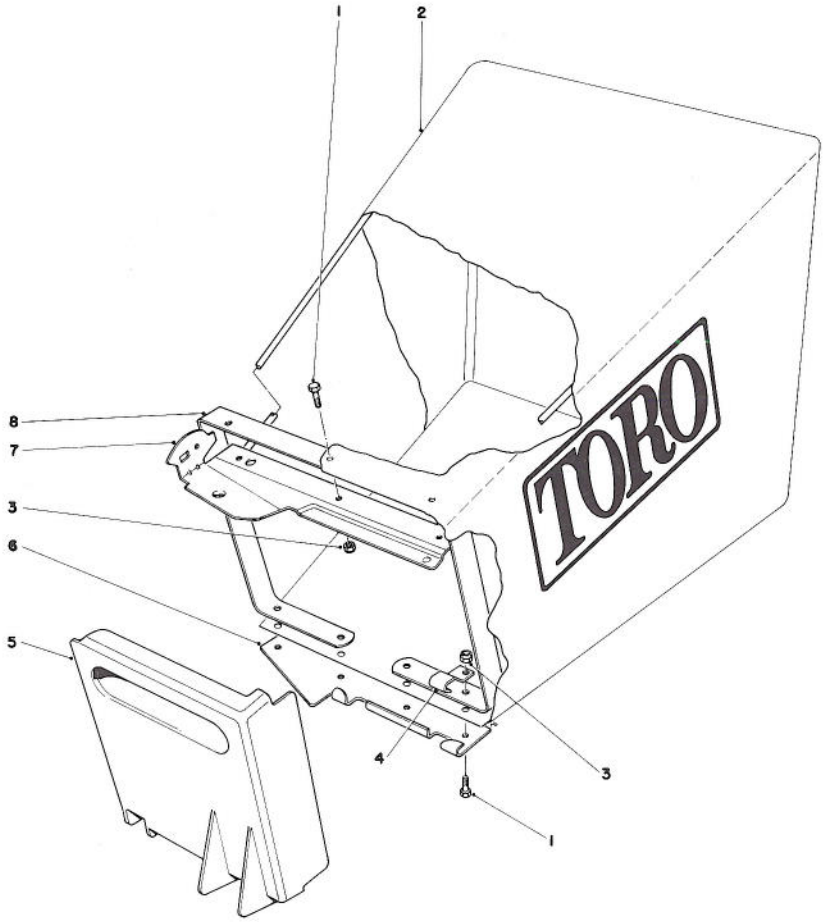

GRASS BAG ASSEMBLY

Ref. No.	Part No.	Description	No. Used
1	3290-321	Hex Hd. Machine Screw	7
2	6-1389	Grass Bag	1
3	3290-419	Locknut	7
4	23-5100	Support Bracket	1
5	23-1140	Bag Door	1
6	23-1150	Door Bracket	1
7	27-8170	Bag Frame	1
8	23-1110	Bag Support	1
*	6-7859	Grass Bagging Kit (Incl. Ref. #1 thru 8)	1

*Not Illustrated

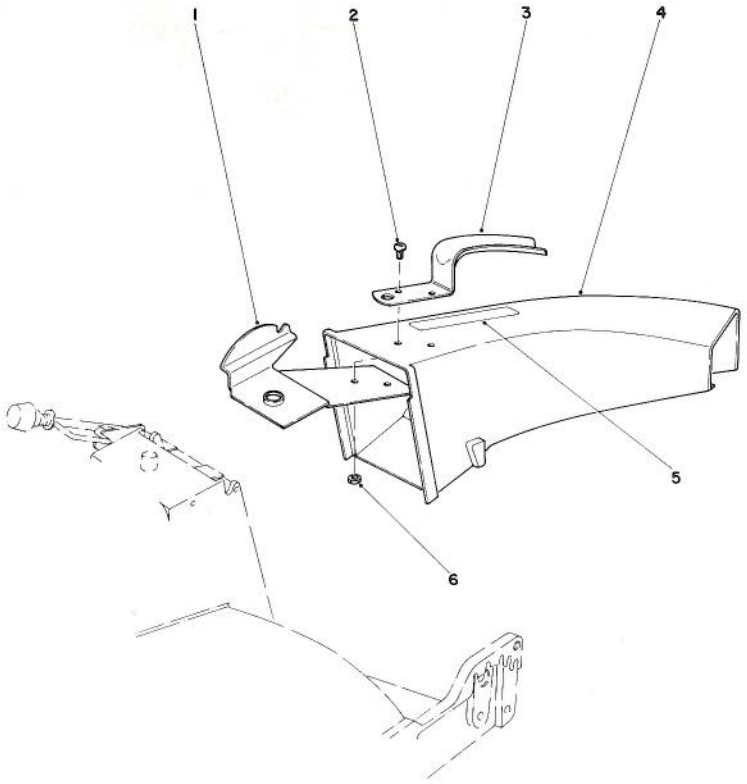

SIDE DISCHARGE CHUTE KIT NO. 59109 (Optional)

Ref. No.	Part No.	Description	No. Used
1	44-2320	Plate Discharge Chute	1
2	3251-3	Screw	2
3	42-1340	Handle – Grass Chute	1

Ref. No.	Part No.	Description	No. Used
4	11-2909	Chute Discharge (Incl. Ref. #5)	1
5	39-9120	Decal – Caution	1
6	3296-12	Locknut	2

ENGINE BRIGGS & STRATTON MODEL 93508-0192-01
ENGINE BRIGGS & STRATTON MODEL 92908-1956-01

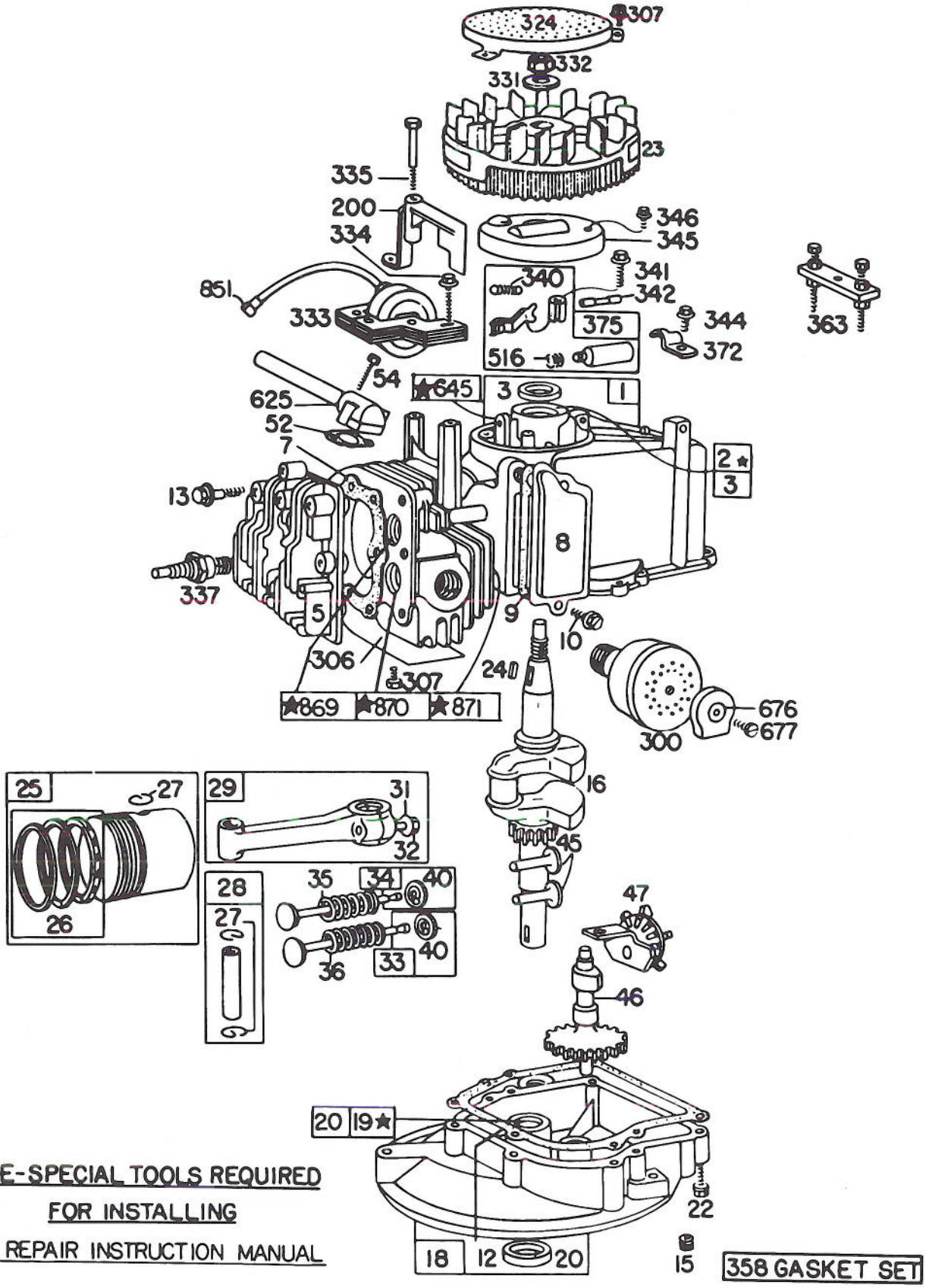

★NOTE-SPECIAL TOOLS REQUIRED
FOR INSTALLING
SEE REPAIR INSTRUCTION MANUAL

ENGINE BRIGGS & STRATTON MODEL 93508-0192-01
ENGINE BRIGGS & STRATTON MODEL 92908-1956-01

Ref. No.	Part No.	Description	No. Used
1	298988	Cylinder	1
2	293708	Bushing – Cylinder **Note:** Requires special tools for installation.	1
3	89660	Seal – Oil	1
5	211479	Head – Cylinder	1
7	*270341	Gasket – Cylinder Head	1
8	298383	Breather – Valve Chamber	1
9	*270239	Gasket – Valve Cover	1
10	93394	Screw – Breather Mtg.	1
12	*270833	Gasket – Crankcase – .015" thick (Standard)	1
	*270895	Gasket – Crankcase – .005" thick	1
	*270896	Gasket – Crankcase – .009" thick	1
13	93111	Screw – Cylinder Head (1-15/16" long)	1
15	93418	Plug – Oil Drain (Socket Head)	1
16	261417	Crankshaft	1
18	390810	Sump – Oil	1
19	293709	Bushing – Oil Sump **Note:** Requires Special Tools for Installation	1
20	291841	Seal – Oil	1
22	93032	Screw – Sump Mtg.	1
23	299982	Flywheel – Magneto	1
24	61760	Key – Flywheel	1
25	298904	Piston Assy. – Standard	1
	298905	Piston Assy. – .010" O.S.	1
	298906	Piston Assy. – .020" O.S.	1
	298907	Piston Assy. – .030" O.S. **MODEL 92900 SERIES PISTON RING SETS: Note:** For Chrome Piston Ring Set – standard size – order Part No. 299742	1
26	298982	Ring Set – Standard Piston	1
	298983	Ring Set – .010" O.S. Piston	1
	298984	Ring Set – .020" O.S. Piston	1
	298985	Ring Set – .030" O.S. Piston	1
27	26026	Lock – Piston Pin	1
28	298909	Pin Assembly – Piston – Standard	1
	298908	Pin Assembly – Piston – .005" O.S.	1
29	294201	Rod Assy. – Connecting **Note:** For Connecting Rod with .020" undersize Crankpin Bore – order No. 296079	1
31	220756	Lock – Conn. Rod Screw	1
32	92296	Screw – Connecting Rod	1
33	296676	Valve – Exhaust	1
34	296677	Valve – Intake	1
35	260552	Spring – Intake Valve	1

Ref. No.	Part No.	Description	No. Used
36	26478	Spring – Exhaust Valve	1
40	93312	Retainer – Valve Spring	1
45	230173	Tappet – Valve	1
46	210453	Gear – Cam	1
47	294652	Oil Slinger Gear and Bracket	1
52	*270345	Gasket – Intake Elbow	1
54	93485	Screw – Intake Elbow Mtg.	1
200	68388	Blade – Governor	1
300	391435	Muffler – Exhaust	1
306	221805	Shield – Cylinder	1
307	93490	Screw – Cylinder Shield and Rotating Screen Mtg	1
324	222063	Screen – Rotating	1
331	220865	Washer – Flywheel	1
332	92284	Nut – Flywheel	1
333	298502	Armature – Magneto	1
334	93381	Screw – Armature Mtg.	1
335	93435	Screw – Armature and Governor Blade Mtg.	1
337	293918	Plug – Spark (with gasket) (Resistor Type) 1-1/2" high – (37-42 mm.) **Note:** Use Ignition Cable Terminal No. 221798	1
340	26018	Spring Breaker Arm	1
341	93381	Screw – Breaker Arm Mtg	1
342	65704	Plunger – Breaker Point	1
344	93042	Screw – Condenser Clamp Mounting	1
345	220366	Cover – Breaker Point and Condenser	1
346	93014	Screw – Dust Cover Mounting	1
358	298989	Gasket Set	1
363	19069	Puller – Flywheel (Optional Accessory)	1
372	220477	Clamp – Condenser	1
375	294628	Breaker Points and Condenser Set **Note: 299061** Ignition Kit Includes: **294628** Point Set **65704** Plunger **61760** Key – Flywheel	1
516	260374	Spring – Connector	1
625	298775	Tube – Fuel Intake	1
645	23513	Bushing – Plunger	1
676	222522	Deflector – Muffler	1
677	93705	Screw – Muffler Deflector	2
851	221798	Terminal – Ignition Cable	1
869	210879	Seat – Intake Valve (Standard)	1
870	211291	Seat – Exhaust Valve (Standard)	1
871	63709	Guide – Exhaust Valve	1

*Included in Gasket Set – Part No. 298989.

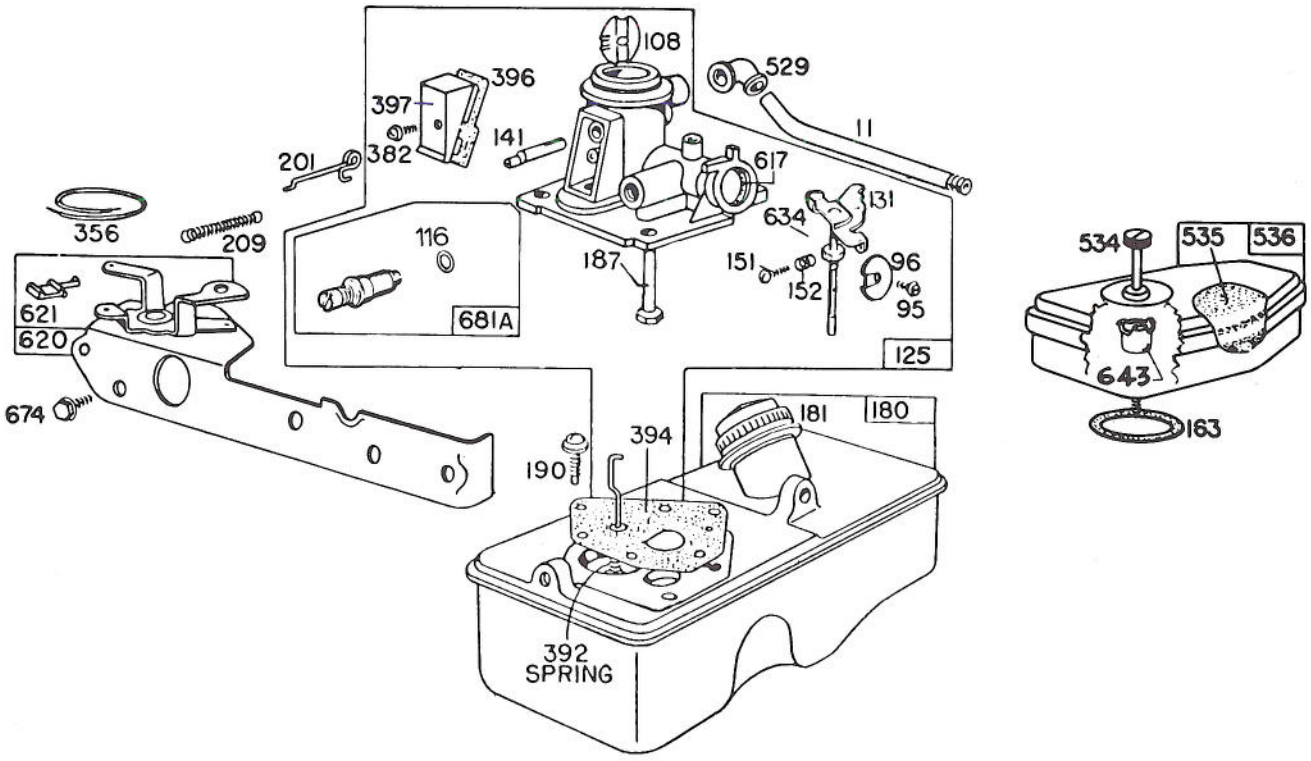

CARBURETOR ASSEMBLY MODEL 93508-0192-01

Ref. No.	Part No.	Description	No. Used
11	230802	Tube – Breather	1
95	93499	Screw – Throttle Valve Mounting	1
96	211203	Valve – Throttle	1
108	280178	Valve – Choke	1
116	280203	Seal – O-Ring	1
125	394591	Carburetor Assembly	1
131	394588	Shaft and Lever Throttle	1
141	68908	Shaft – Choke	1
151	93524	Screw – Machine Rd. Hd.	1
152	260746	Spring – Throttle Adj.	1
163	270816	Gasket – Air Cleaner Mtg.	1
180	393113	Tank Assembly – Fuel	1
181	298425	Cap – Fuel Tank	1
187	393001	Pipe – Fuel	1
190	93440	Screw – Fuel Tank Mounting	1
201	260878	Link – Governor	1
209	260875	Spring – Governor For 3400 to 3600 RPM Top Speed Set-No Load	1

Ref. No.	Part No.	Description	No. Used
356	298479	Wire – Ground	1
382	93864	Screw – Choke Link Cover	1
392	261016	Spring – Diaphragm	1
394	299637	Diaphragm – Carburetor	1
396	270571	Gasket – Choke Link Cover	1
397	211678	Cover – Choke Link	1
529	67838	Grommet – Breather	1
534	93374	Screw – Air Cleaner	1
535	270579	Element – Air Cleaner	1
536	390055	Cleaner Assembly – Air	1
617	270344	Seal – Intake Tube	1
620	299974	Plate – Carburetor Control	1
621	297472	Switch – Stop	1
634	270167	Washer – Throttle Shaft (Felt)	1
643	221321	Cup – Air Cleaner	1
674	93158	Screw – Tank to Bracket	1
681A	393451	Needle Valve Kit	1

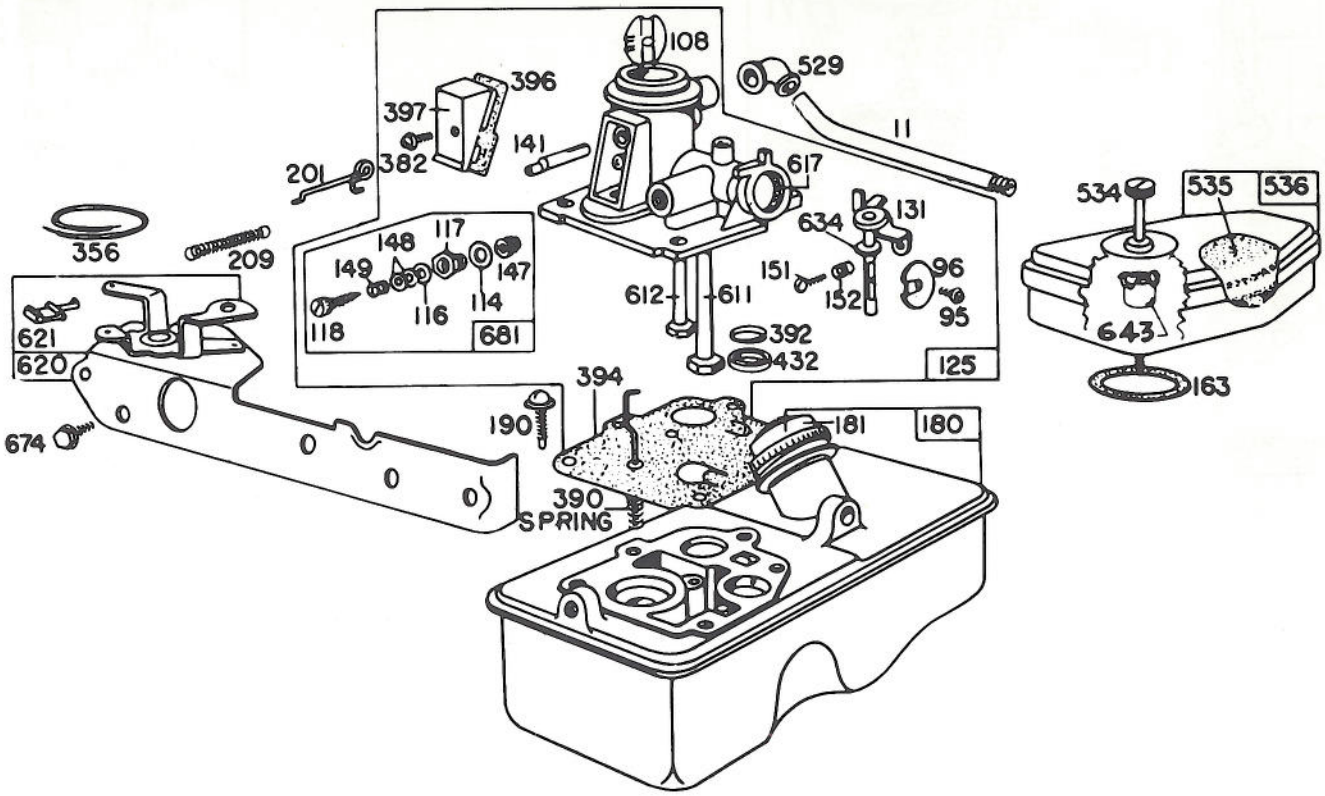

CARBURETOR ASSEMBLY MODEL 92908-1956-01

Ref. No.	Part No.	Description	No. Used
11	230802	Tube – Breather	1
95	93499	Screw – Throttle Valve Mounting	1
96	211237	Valve – Throttle	1
108	298819	Valve – Choke	1
114	66594	Gasket – Needle Valve Nut	1
116	65978	Packing – Needle Valve	1
117	230590	Nut – Needle Valve	1
118	23433	Valve – Needle	1
125	390065	Carburetor Assembly	1
131	299977	Shaft and Lever – Throttle	1
141	68908	Shaft – Choke	1
147	230591	Seat – Needle Valve	1
148	22235	Washer – Needle Valve	2
149	26336	Spring – Needle Valve	1
151	93524	Screw – Rd. Hd.	1
152	260746	Spring – Throttle Adj.	1
163	270816	Gasket – Air Cleaner Mounting	1
180	391694	Tank Assembly – Fuel Used on type Nos. 0500 and up.	1
181	298425	Cap – Fuel Tank	1
190	93440	Screw – Fuel Tank Mtg.	1
201	261027	Link – Governor	1

Ref. No.	Part No.	Description	No. Used
209	261417	Spring – Governor	1
356	298479	Wire – Ground	1
382	93545	Screw – Choke Link Cover	1
390	261015	Spring – Diaphragm	1
392	260455	Spring – Fuel Pump Diaphragm	1
394	391681	Diaphragm – Carburetor	1
396	270571	Gasket – Choke Link Cover	1
397	211678	Cover – Choke Link	1
432	221377	Cap – Spring	1
529	67838	Grommet – Breather	1
534	93374	Screw – Air Cleaner	1
535	270579	Element – Air Cleaner	1
536	390055	Cleaner Assembly – Air	1
611	297219	Pipe – Fuel (long)	1
612	296811	Pipe – Fuel (short)	1
617	270344	Seal – Fuel Intake Tube	1
620	299974	Plate – Carburetor Control	1
621	297472	Switch – Stop	1
634	270167	Washer – Throttle Shaft (Felt)	1
643	221321	Cup – Air Cleaner	1
674	93447	Screw – Tank to Bracket	1
681	299060	Needle Valve Kit	1

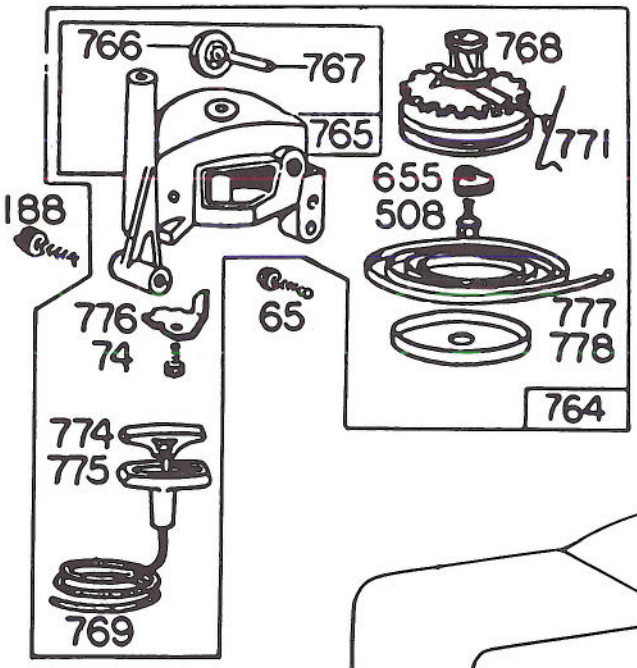

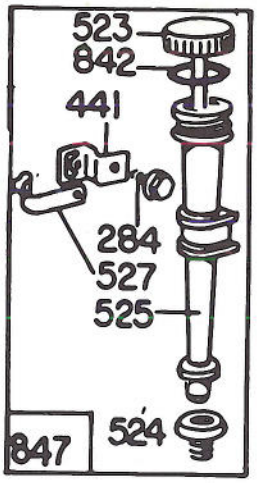

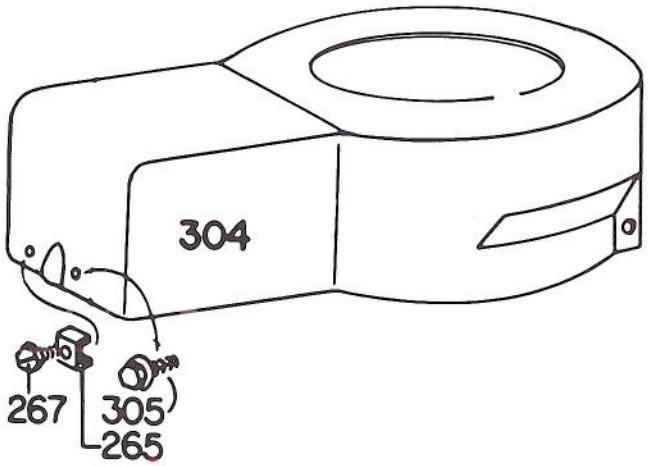

STARTER & SHROUD ASSEMBLY MODEL 93508-0192-01
STARTER & SHROUD ASSEMBLY MODEL 92908-1956-01

Ref. No.	Part No.	Description	No. Used
65	93587	Screw – Vertical Pull Starter Mounting	1
74	93490	Screw	1
188	93585	Screw – Fuel Tank and Starter Mounting	1
265	22372	Clamp – Casing	1
267	93469	Screw – Clamp Mtg.	1
284	93572	Screw – Clamp Mtg.	1
304	299983	Housing – Blower	1
305	93559	Screw – Blower Housing Mounting	1
441	222530	Bracket – Oil Fill Tube	1
508	93158	Screw	1
523	391838	Cap with Dipstick – Oil Filler **Note:** For complete Oil Fill Cap with Dipstick and Oil Filler Tube Assy. – order Part 392055.	1
524	68838	Seal – Filler Tube	1
525	280131	Tube – Oil Filler	1

Ref. No.	Part No.	Description	No. Used
527	222548	Clamp – Oil Filler Tube	1
655	222057	Anchor – Spring Oil Minder	1
764	392064	Starter Assy. – Vertical Pull	1
765	392138	Housing – Vertical Pull Starter	1
766	280022	Pulley – Rope (Small)	1
767	231048	Pin – Small Rope Pulley (7/16" Long)	1
768	392063	Pulley and Gear Assembly – Starter	1
769	66734	Rope – Vertical Pull Starter	1
771	299961	Clip – Vertical Pull Starter	1
774	280121	Insert – Starter Handle	1
775	280036	Grip – Starter Rope	1
776	222049	Guide – Rope	1
777	390066	Spring – Vertical Pull Starter	1
778	280021	Cover – Vertical Pull Starter Pulley	1
842	270920	Seal – Oil Filler Cap	1
847	392055	Group – Oil Fill	1

Litho In U.S.A.