Form No. 3461-709 Rev B

TORO®

Count on it.

Operator's Manual

eTimeMaster™ eTM76 76cm 60V Lawn Mower

Model No. 21876—Serial No. 400000000 and Up
Model No. 21876T—Serial No. 400000000 and Up

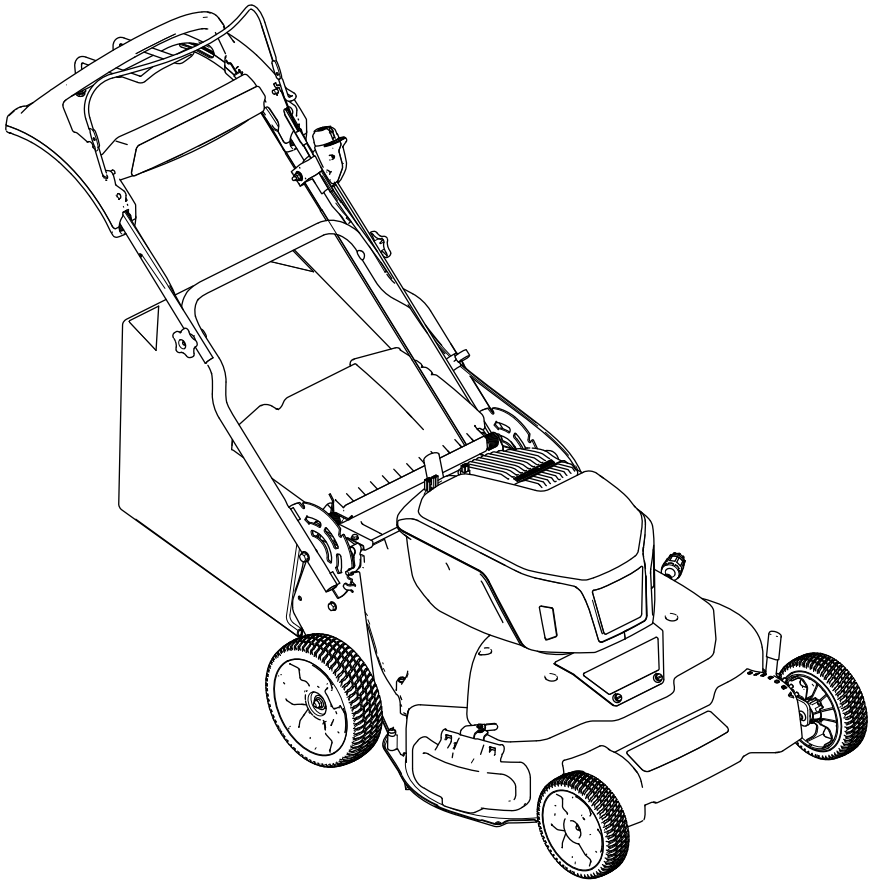

Register at www.Toro.com.
Original Instructions (EN)

CE UK CA

3461-709

This product complies with all relevant European directives; for details, please see the separate product specific Declaration of Conformity (DOC) sheet.



For assistance, please see www.Toro.com/support for instructional videos or contact your Authorized Service Dealer before returning this product.

Do not tamper with or disable safety devices on the machine, and check their proper operation regularly. Do not attempt to adjust or tamper with the engine speed control; doing so may create an unsafe operating condition, resulting in personal injury.

Introduction

This rotary-blade, walk-behind lawn mower is intended to be used by residential homeowners. It is designed primarily for cutting grass on well-maintained lawns on residential properties. It is not designed for cutting brush or for agricultural uses. It is designed to use Toro 60V lithium-ion battery packs. These battery packs are designed to be charged only by Toro 60V lithium-ion battery chargers. Using these products for purposes other than their intended use could prove dangerous to you and bystanders.

Model 21876T does not include a battery or a charger.

Read this information carefully to learn how to operate and maintain your product properly and to avoid injury and product damage. You are responsible for operating the product properly and safely.

Visit www.Toro.com for more information, including safety tips, training materials, accessory information, help finding a dealer, or to register your product.

Whenever you need service, genuine Toro parts, or additional information, contact an Authorized Service Dealer or Toro Customer Service and have the model and serial numbers of your product ready. Figure 1 identifies the location of the model and serial numbers on the product. Write the numbers in the space provided.

Important: **With your mobile device, you can scan the QR code on the serial number decal (if equipped) to access warranty, parts, and other product information.**

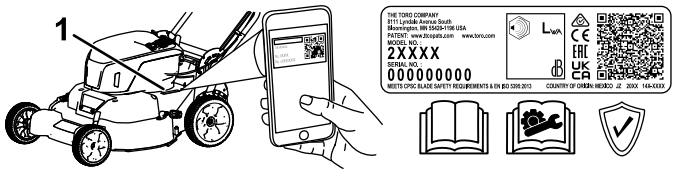

g428069

Figure 1

1. Model and serial number location

Model No. _____

Serial No. _____

Safety-Alert Symbol

The safety-alert symbol (Figure 2) shown in this manual and on the machine identifies important safety messages that you must follow to prevent accidents.



g000502

Figure 2

Safety-alert symbol

The safety-alert symbol appears above information that alerts you to unsafe actions or situations and is followed by the word **DANGER**, **WARNING**, or **CAUTION**.

DANGER indicates an imminently hazardous situation which, if not avoided, **will** result in death or serious injury.

WARNING indicates a potentially hazardous situation which, if not avoided, **could** result in death or serious injury.

CAUTION indicates a potentially hazardous situation which, if not avoided, **may** result in minor or moderate injury.

This manual uses two other words to highlight information. **Important** calls attention to special mechanical information and **Note** emphasizes general information worthy of special attention.

Contents

Safety-Alert Symbol 2
Safety 3
..... 3
Safety and Instructional Decals 6
Setup 8

© 2024—The Toro® Company

All Rights Reserved

1 Assembling and Unfolding the Handle 8
2 Installing the Blade-Control Bar 9
3 Assembling the Grass Bag 9
4 Mounting the Battery Charger (Optional) 9
Product Overview 10
Specifications 10
Attachments/Accessories 11
Before Operation 11
Installing the Battery Pack 11
Adjusting the Handle Height 12
Adjusting the Cutting Height 12
During Operation 13
Starting the Machine 13
Adjusting the Blade Speed 13
Using the Self-Propel Drive 13
Shutting Off the Machine 14
Recycling the Clippings 14
Bagging the Clippings 14
Side-Discharging the Clippings 15
Operating Tips 16
After Operation 17
Removing the Battery Pack from the Machine 17
Charging the Battery Pack 17
Cleaning Under the Machine 17
Folding the Handle 19
Maintenance 20
Recommended Maintenance Schedule(s) 20
Lubricating the Machine 20
Adjusting the Self-Propel Drive 20
Servicing the Blade-Drive System 20
Servicing the Blades 21
Checking for Bent Blades 22
Removing the Blades 22
Installing the Blades 23
Preparing the Battery Pack for Recycling 24
Storage 24
Troubleshooting 25

Safety

IMPORTANT SAFETY INSTRUCTIONS

⚠ WARNING

When using electric lawn mowers, basic safety precautions should always be followed to reduce the risk of fire, electric shock, and personal injury, including the following:

Read All Instructions

I. Training

1. The operator of the machine is responsible for any accidents or hazards occurring to others or their property.
2. Do not allow children to use or play with the machine, battery pack, or the battery charger; local regulations may restrict the age of the operator.
3. Do not allow children or untrained people to operate or service this device. Allow only people who are responsible, trained, familiar with the instructions, and physically capable to operate or service the device.
4. Before using the machine, battery pack, and battery charger, read all the instructions and cautionary markings on these products.
5. Become familiar with the controls and proper use of the machine, battery pack, and battery charger.

II. Preparation

1. Keep bystanders, especially children and pets, out of the operating area.
2. Do not operate the machine without all guards and safety devices, such as deflectors and grass catchers, in place and functioning properly on the machine.
3. Inspect the area where you will use the machine and remove all objects that could interfere with the operation of the machine or that the machine could throw.
4. Before using the machine, ensure that the blade, blade bolt, and blade assembly are not worn or damaged. Replace any damaged or unreadable labels.
5. Use only the battery pack specified by Toro. Using other accessories and attachments may increase the risk of injury and fire.
6. Plugging the battery charger into an outlet that is not 100 to 240V can cause a fire or electric

shock. Do not plug the battery charger into an outlet other than 100 to 240V. For a different style of connection, use an attachment plug adapter of the proper configuration for the power outlet if needed.

7. Do not use a damaged or modified battery pack or battery charger, which may exhibit unpredictable behavior that results in fire, explosion, or risk of injury.
8. If the supply cord to the battery charger is damaged, contact an Authorized Service Dealer to replace it.
9. Charge the battery pack with only the battery charger specified by Toro. A charger suitable for 1 type of battery pack may create a risk of fire when used with another battery pack.
10. Charge the battery pack in a well-ventilated area only.
11. Follow all charging instructions and do not charge the battery pack outside of the temperature range specified in the instructions. Otherwise, you may damage the battery pack and increase the risk of fire.
12. Dress properly—Wear appropriate clothing, including eye protection; long pants; substantial, slip-resistant footwear (not barefoot or wearing sandals); and hearing protection. Tie back long hair and do not wear loose clothing or loose jewelry that can get caught in moving parts. Wear a dust mask in dusty operating conditions.

III. Operation

1. Contact with the moving blade will cause serious injury. Keep your hands and feet away from the cutting area and all moving parts of the machine. Keep clear of any discharge opening.
2. Using this machine for purposes other than its intended use could prove dangerous to you and bystanders.
3. Disengage the self-propel drive (if equipped) before starting the machine.
4. Do not tilt the machine when starting the motor.
5. Prevent unintentional starting—Ensure that the electric-start button is removed from the electric-start switch before connecting the battery pack and handling the machine.
6. Use your full attention while operating the machine. Do not engage in any activity that causes distractions; otherwise, injury or property damage may occur.
7. Stop the machine, remove the electric-start button, remove the battery pack from the machine, and wait for all movement to stop before adjusting, servicing, cleaning, or storing the machine.
8. Remove the battery pack and electric-start button from the machine whenever you leave it unattended or before changing accessories.
9. Do not force the machine—Allow the machine to do the job better and safer at the rate for which it was designed.
10. Stay alert—Watch what you are doing and use common sense when operating the machine. Do not use the machine while ill, tired, or under the influence of alcohol or drugs.
11. Do not use a battery-operated lawn mower in rain.
12. Operate the machine only in good visibility and appropriate weather conditions. Do not operate the machine when there is the risk of lightning.
13. Use extreme caution when reversing or pulling the machine toward you.
14. Keep proper footing and balance at all times, especially on slopes. Mow across the face of slopes, never up and down. Use extreme caution when changing directions on slopes. Do not mow exceedingly steep slopes. Walk, never run with the machine.
15. Do not direct the discharge material toward anyone. Avoid discharging material against a wall or obstruction; material may ricochet toward you. Stop the blade(s) when crossing surfaces other than grass.
16. Watch for holes, ruts, bumps, rocks, or other hidden objects. Uneven terrain could cause you to lose your balance or footing.
17. Wet grass or leaves can cause serious injury if you slip and contact the blade. Do not mow in wet conditions. Do not mow when it is raining.
18. If the machine strikes an object or starts to vibrate, immediately shut off the machine, remove the electric-start button, remove the battery pack, and wait for all movement to stop before examining the machine for damage. Make all necessary repairs before resuming operation.
19. Stop the machine and remove the electric-start button before loading the machine for hauling.
20. Under abusive conditions, the battery pack may eject liquid; avoid contact. If you accidently come into contact with the liquid, flush with water. If the liquid contacts your eyes, seek medical help. Liquid ejected from the battery pack may cause irritation or burns.

IV. Maintenance and Storage

1. Stop the machine, remove the electric-start button, remove the battery pack from the machine, and wait for all movement to stop before adjusting, servicing, cleaning, or storing the machine.
2. Do not attempt to repair the machine except as indicated in the instructions. Have an Authorized Service Dealer perform service on the machine using identical replacement parts.
3. Wear gloves and eye protection when servicing the machine.
4. Sharpen a dull blade on both edges to maintain balance. Clean the blade and ensure that it is balanced.
5. Replace the blade if it is bent, worn, or cracked. An unbalanced blade causes vibration, which could damage the motor or cause personal injury.
6. When servicing the blade, be aware that the blade can still move even though the power source is off.
7. Check the grass collection bag frequently for deterioration or wear, and replace a worn bag with a Toro [replacement] bag.
8. For best performance, use only genuine Toro replacement parts and accessories. Other replacement parts and accessories could be dangerous, and such use could void the product warranty.
9. Maintain the machine—Keep cutting edges sharp and clean for the best and safest performance. Keep handles dry, clean, and free from oil and grease. Keep guards in place and in working order. Keep blades sharp. Use identical replacement blades only.
10. Check the machine for damaged parts—If there are damaged guards or other parts, determine whether the machine will operate properly. Check for misaligned and binding moving parts, broken parts, mounting, and any other condition that may affect its operation. Unless indicated in the instructions, have an Authorized Service Dealer repair or replace a damaged guard or part.
11. When the battery pack is not in use, keep it away from metal objects such as paper clips, coins, keys, nails, and screws that can make a connection from 1 terminal to another. Shorting the battery terminals may cause burns or a fire.
12. Check the blade and motor mounting bolts frequently for tightness.
13. When you are not using the machine, store it indoors in a dry, secure place out of the reach of children.
14. Do not expose a battery pack or machine to fire or excessive temperature. Exposure to fire or temperature above 130°C (265°F) may cause explosion.
15. CAUTION—A mistreated battery pack may present a risk of fire, explosion, or chemical burn.
    - Do not disassemble the battery pack.
    - Replace the battery pack with a genuine Toro battery pack only; using another type of battery pack may cause a fire or risk of injury.
    - Keep battery packs out of the reach of children and in the original packaging until you are ready to use them.

SAVE THESE INSTRUCTIONS

Safety and Instructional Decals

Safety decals and instructions are easily visible to the operator and are located near any area of potential danger. Replace any decal that is damaged or missing.

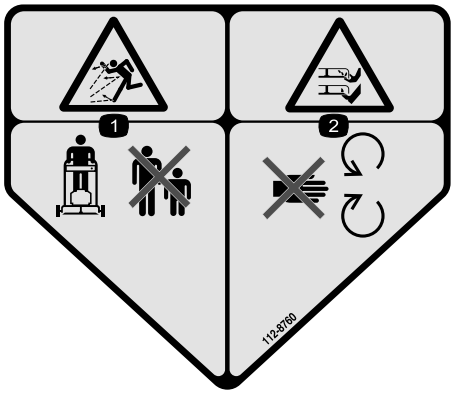

decal112-8760

112-8760

1. Thrown object hazard—keep bystanders away.
2. Cutting/dismemberment hazard of hand or foot, mower blade—stay away from moving parts.



decal120-9570

120-9570

1. Warning—stay away from moving parts, keep all guards and shields in place.

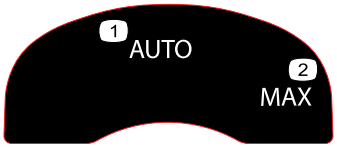

decal134-4691

134-4691

1. Auto speed
2. Max speed

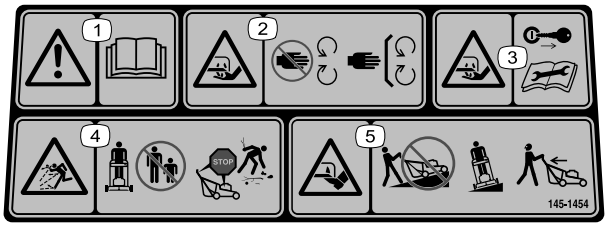

decal145-1454

145-1454

1. Warning—read the *Operator's Manual*.
2. Cutting/dismemberment hazard of the hand, mower blade—stay away from moving parts; keep all guards and shields in place.
3. Cutting/dismemberment hazard of the hand, mower blade—remove the key and read the *Operator's Manual* before performing maintenance.
4. Thrown object hazard—keep bystanders away; shut off the machine and wait for all moving parts to stop before leaving the machine; pick up debris before mowing.
5. Cutting/dismemberment hazard of the foot, mower blade—do not mow up or down slopes; only mow across slopes; look behind you when mowing in reverse.

Model 81805

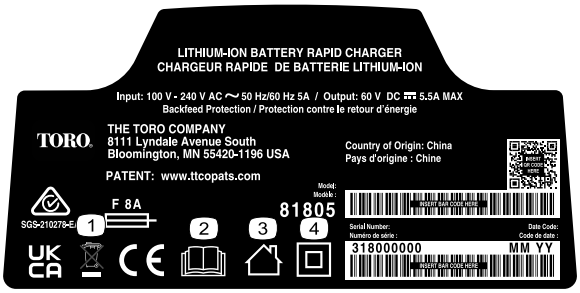

decal144-6035

144-6035

1. Do not dispose improperly
2. Read the *Operator's Manual*.
3. For indoor use
4. Double insulated

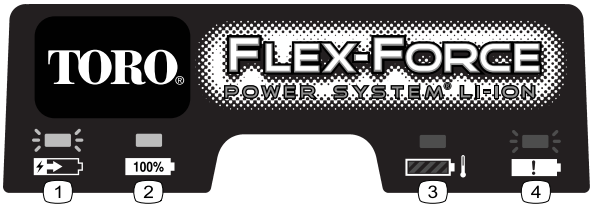

decal145-3129

145-3129

1. The battery pack is charging.
2. The battery pack is fully charged.
3. The battery pack is over or under the appropriate temperature range.
4. Battery pack charging fault

Model 68810



decal145-8263

145-8263

1. Read the *Operator's Manual*.
2. Recycle the battery
3. Do not dispose improperly
4. Keep away from open fire or flames
5. Do not expose to rain

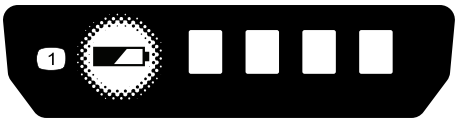

decal145-8265

145-8265

1. Battery charge status

Setup

Important: **The battery pack is not fully charged when it is purchased. Before using the machine for the first time, refer to Charging the Battery Pack (page 17).**

Important: **Remove and discard the protective plastic sheet that covers the motor and any other plastic or wrapping on the machine.**

1

Assembling and Unfolding the Handle

No Parts Required

Procedure

⚠ WARNING

Folding or unfolding the handle improperly can damage the cables, causing an unsafe operating condition.

- **Do not damage the cable(s) when folding or unfolding the handle.**
- **Ensure that the cable(s) are routed to the outside of the handle.**
- **If a cable is damaged, contact an Authorized Service Dealer.**

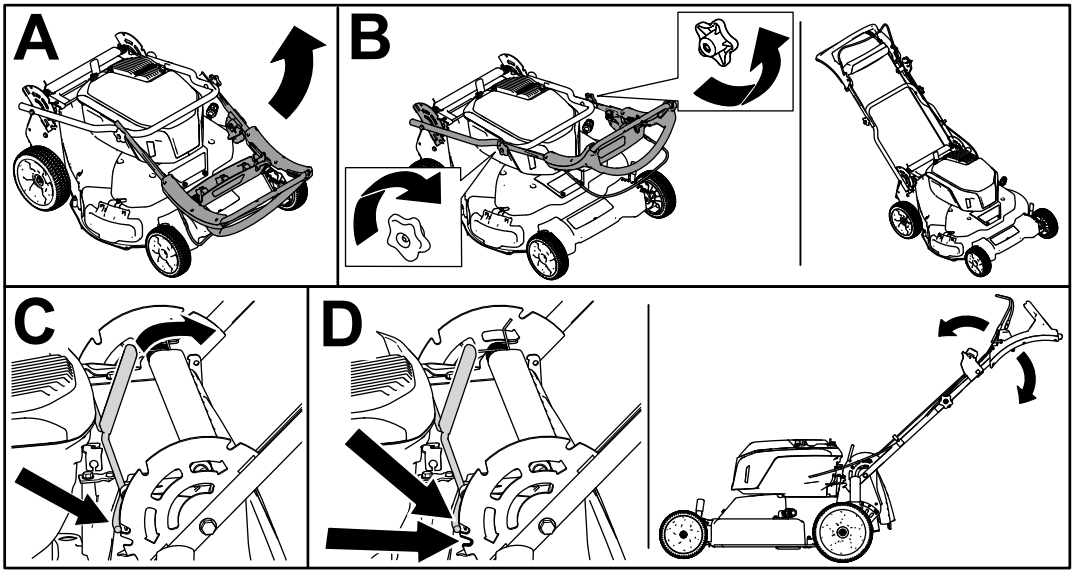

g426198

Figure 3

2

Installing the Blade-Control Bar

No Parts Required

Procedure

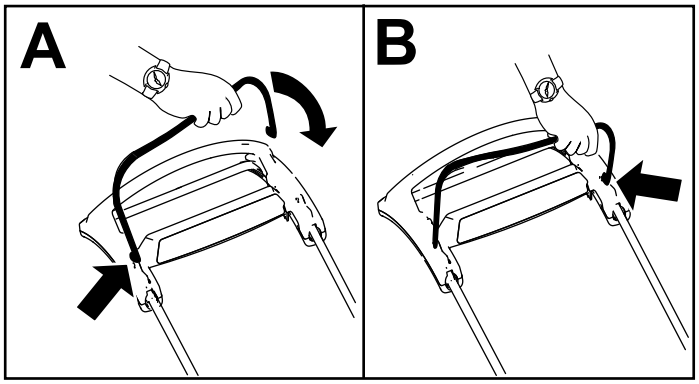

g344378

Figure 4

3

Assembling the Grass Bag

No Parts Required

Procedure

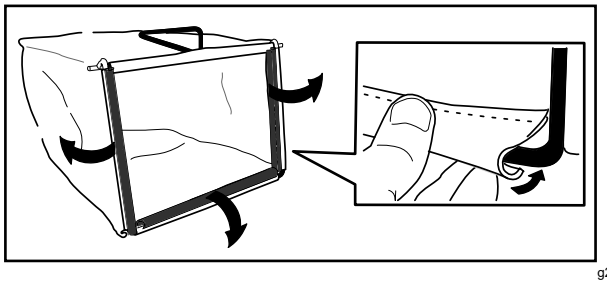

g230447

Figure 5

4

Mounting the Battery Charger (Optional)

Parts needed for this procedure:

2	Mounting hardware (not included)

Procedure

If desired, mount the battery charger securely on a wall using the wall-mount key holes on the back of the charger.

Mount it indoors (such as a garage or other dry place), near a power outlet, and out of the reach of children.

Refer to Figure 6 for assistance in mounting the charger.

Slide the charger over the appropriately positioned hardware to secure the charger in place (hardware not included).

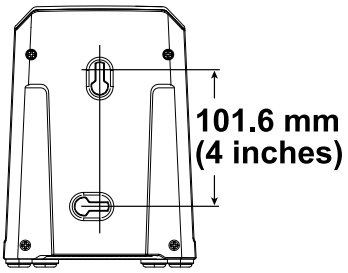

g290534

Figure 6

Product Overview

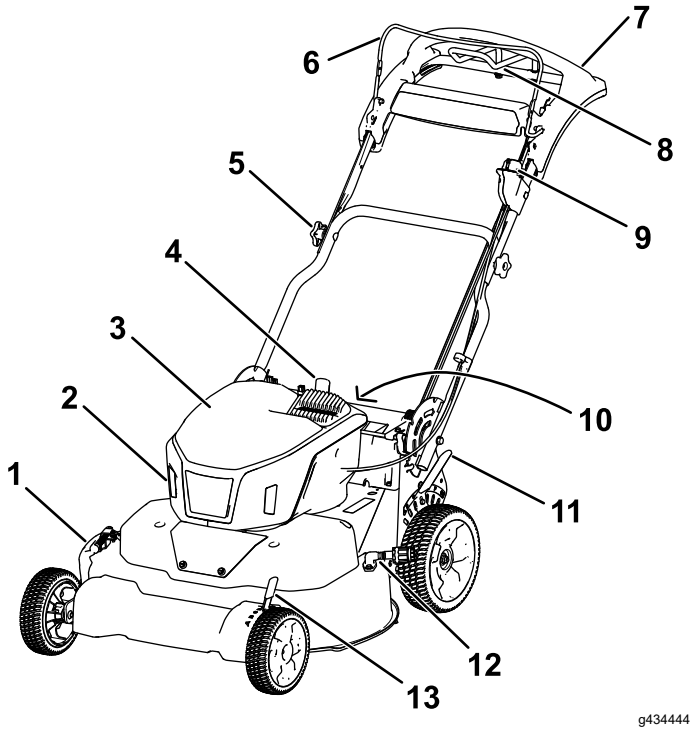

g434444

Figure 7

1. Side-discharge deflector
2. Headlight
3. Battery compartment
4. Handle-lock lever
5. Handle knob (2)
6. Blade-control bar
7. Personal pace handle
8. Traction-assist handle
9. Electric-start button
10. Rear deflector
11. Rear cutting-height lever
12. Washout port
13. Front cutting-height lever

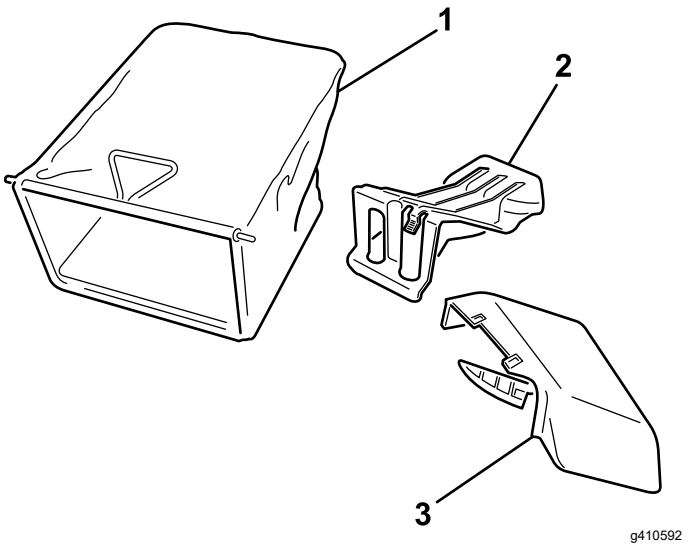

g410592

Figure 8

1. Grass bag
2. Rear-discharge plug (installed)
3. Side-discharge chute

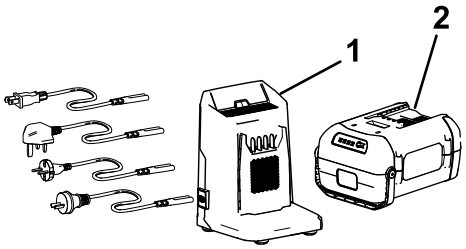

g426502

Figure 9

1. Battery charger Model 81805 (included with Model 21876)
2. Battery pack Model 68810 (2 included with Model 21876)

Specifications

Model

Model	Weight	Length	Width	Height
21876 and 21876T	59.4 kg (131 lb)	165 cm (65 inches)	81 cm (32 inches)	114 cm (45 inches)

Battery Pack

Model	**68810**
Battery pack capacity	10.0 Ah 540 Wh
Battery manufacturer rating = 60V maximum and 54V nominal. Actual voltage varies with load.	

Battery Charger

Model	**81805**
Type	60V MAX Lithium-Ion Battery Rapid Charger
Input	100 to 240V AC ~5.0A, 50/60Hz
Output	60V DC ⎓ 5.5A MAX

Appropriate Temperature Ranges

Charge battery pack at	5°C (41°F) to 40°C (104°F)*
Use battery pack at	-30°C (-22°F) to 49°C (120°F)
Store battery pack/charger at	5°C (41°F) to 40°C (104°F)*

*Charging time will increase if you do not charge the battery within this range.

Store the tool, battery pack, and battery charger in an enclosed clean, dry area.

Attachments/Accessories

A selection of Toro approved attachments and accessories is available for use with the machine to enhance and expand its capabilities. Contact your Authorized Service Dealer or authorized Toro distributor or go to www.Toro.com for a list of all approved attachments and accessories.

To ensure optimum performance and continued safety certification of the machine, use only genuine Toro replacement parts and accessories. Replacement parts and accessories made by other manufacturers could be dangerous, and such use could void the product warranty.

Operation

Note: Determine the left and right sides of the machine from the normal operating position.

Before Operation

Installing the Battery Pack

Important: **Use the battery pack only in temperatures that are within the appropriate range; refer to Specifications (page 10).**

1. Make sure that the vents on the battery are clear of any dust and debris.
2. Lift up the battery-compartment lid (A of Figure 10).
3. Line up the cavity in the battery pack with the tongue on the machine and slide the battery pack into the compartment until it locks into place (B of Figure 10).
4. Close the battery-compartment lid (C of Figure 10).

   Note: If the battery-compartment lid does not close completely, the battery is not fully installed.

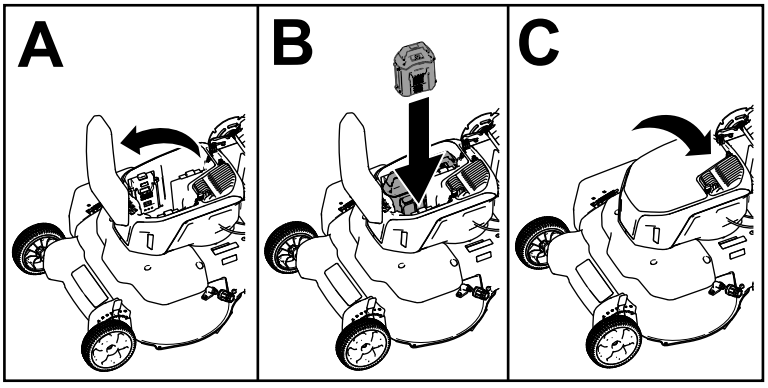

g410618

Figure 10

Adjusting the Handle Height

You may raise or lower the handle to a position comfortable for you.

Pull the handle-lock lever rearward to disengage the handle-lock pins, move the handle to 1 of 4 positions, and release the handle-lock lever to secure the handle in place (Figure 11).

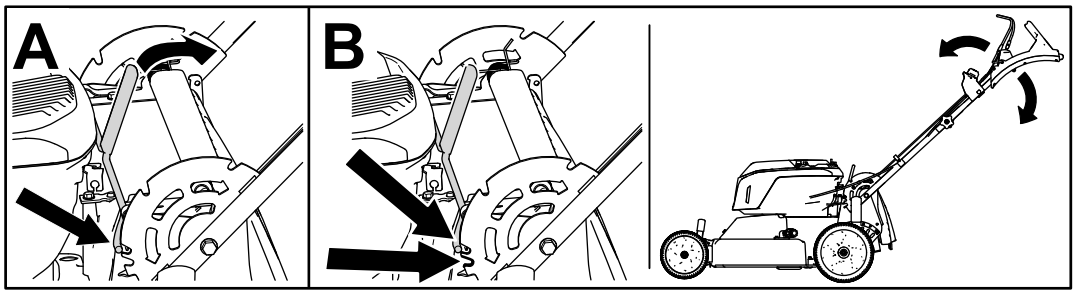

g426209

Figure 11

Adjusting the Cutting Height

⚠ DANGER

Adjusting the height of cut could bring your hands into contact with a moving blade and result in serious injury.

- **Shut off the motor, remove the battery, and wait for all moving parts to stop before adjusting the cutting height.**
- **Do not put your fingers under the housing when adjusting the cutting height.**

Note: To raise the machine, move the front and rear cutting-height levers forward; to lower the machine, move the cutting-height levers rearward. Set all the wheels to the same height unless special circumstances require otherwise.

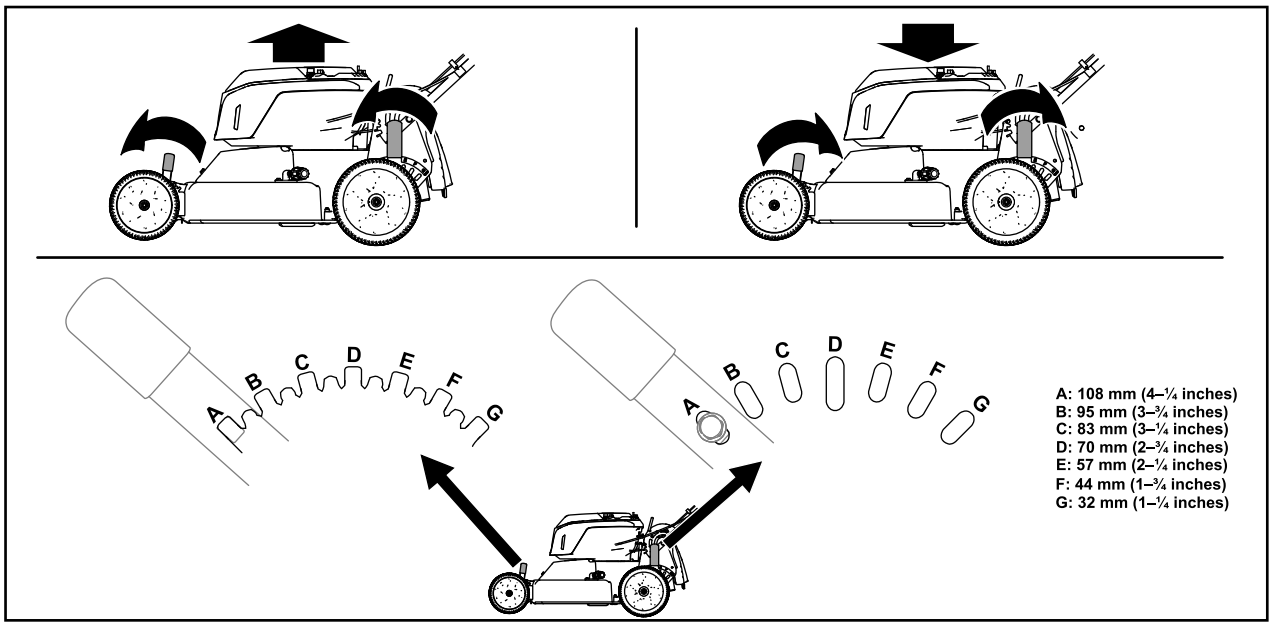

g426213

Figure 12

During Operation

Starting the Machine

1. Ensure that the battery pack(s) are installed in the machine; refer to Installing the Battery Pack (page 11).
2. Insert the electric-start button into the electric-start switch (A of Figure 13).
3. Squeeze the blade-control bar and hold it to the handle for 2 seconds (B of Figure 13).
4. Press the electric-start button and keep it pressed until the motor starts (C of Figure 13).

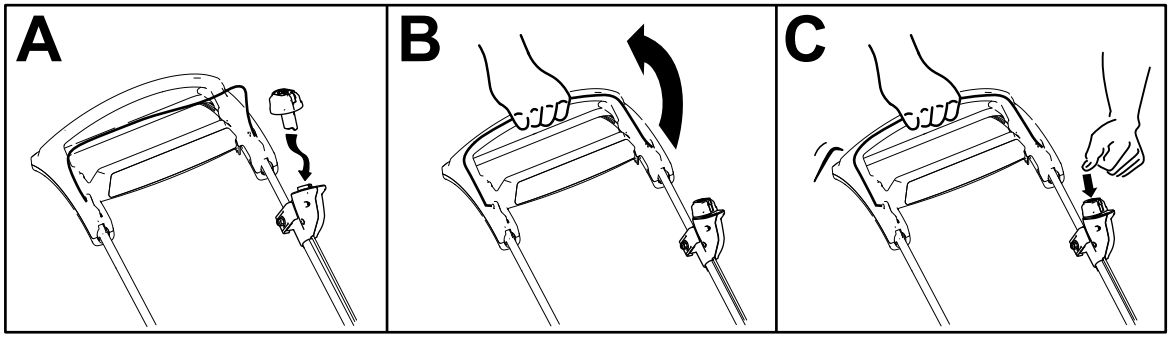

g426674

Figure 13

Adjusting the Blade Speed

This machine has 2 blade-speed settings: AUTO and MAX.

- When set to the AUTO position, the blade speed is adjusted automatically for greater efficiency; changes in cutting conditions are detected and the blade speed increases when necessary to maintain quality of cut.
- When set to the MAX position, the blade speed remains at the highest speed at all times. The traction speed of the machine also increases.

Turn the electric-start button in the electric-start switch to either position to adjust the blade speed setting (Figure 14).

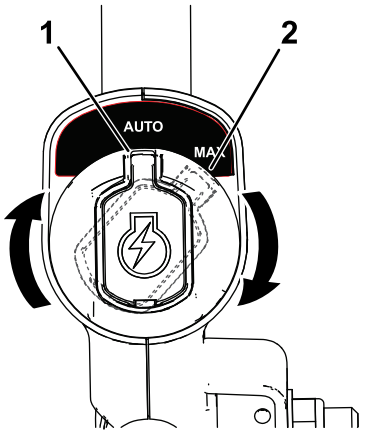

g337279

Figure 14

1. AUTO position
2. MAX position

Using the Self-Propel Drive

To operate the self-propel drive, simply walk with your hands on the upper handle and your elbows at your sides, and the machine will automatically keep pace with you (Figure 15).

Note: Use the traction-assist handle in situations when you need more control than you have with the self-propel drive alone.

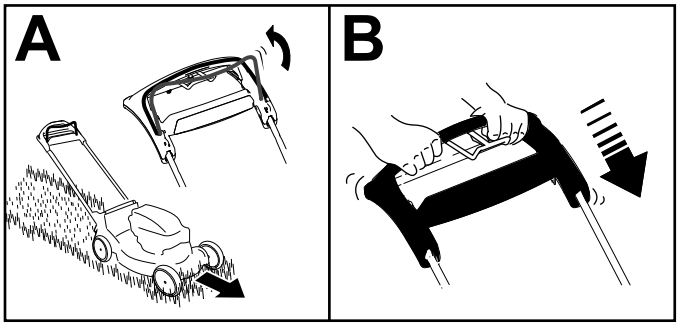

g434445

Figure 15

Note: If the machine does not freely roll backward after self-propelling, stop walking, hold your hands in place, and allow the machine to roll a couple of centimeters (inches) forward to disengage the wheel drive. You can also try reaching just under the upper handle to the metal handle and pushing the machine forward a couple of centimeters (inches). If the machine still does not roll backward easily, contact an Authorized Service Dealer.

Shutting Off the Machine

1. Release the blade-control bar (A of Figure 16).
2. Remove the electric-start button from the electric-start switch (B of Figure 16).
3. Remove the battery pack; refer to Removing the Battery Pack from the Machine (page 17).

   Note: Whenever you are not using the machine, remove the battery pack.

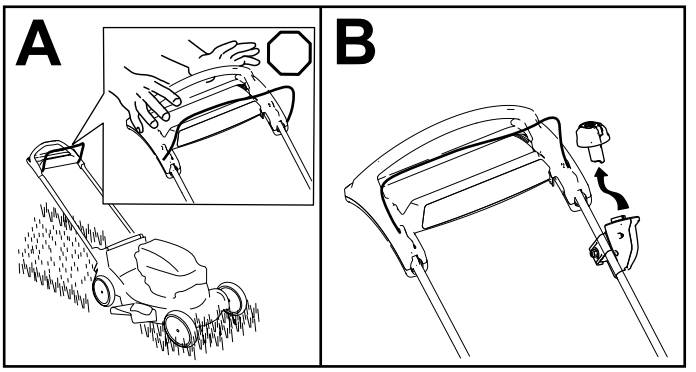

g335480

Figure 16

Recycling the Clippings

This machine comes from the factory ready to recycle grass and leaf clippings back into the lawn. To prepare the machine to recycle, do the following:

- If the side-discharge chute is on the machine, remove it and lower the side-discharge deflector; refer to Removing the Side-Discharge Chute (page 15).
- If the grass bag is on the machine, remove it; refer to Removing the Grass Bag (page 15).
- If the rear-discharge plug is not installed, grip it by the handle, raise the rear deflector, and insert it into the rear-discharge chute until the latch locks into place; refer to Figure 17.

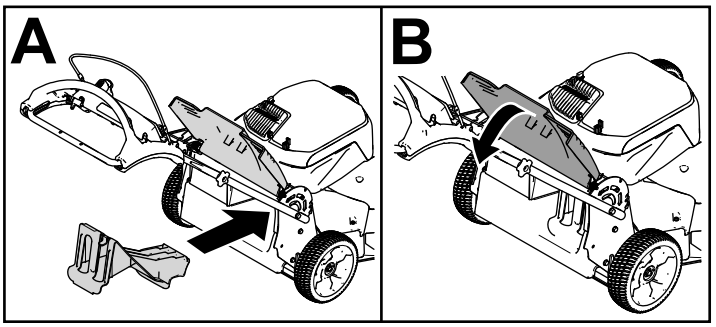

g426214

Figure 17

Bagging the Clippings

Use the grass bag when you want to collect grass and leaf clippings from the lawn.

If the side-discharge chute is on the mower, remove it before bagging the clippings; refer to Removing the Side-Discharge Chute (page 15).

Installing the Grass Bag

1. Raise and hold up the rear deflector (A of Figure 18).
2. Remove the rear-discharge plug by pulling down on the latch with your thumb and pulling the plug out from the machine (B of Figure 18).
3. Install the bag rod into the notches at the base of the handle and rock the bag back and forth to ensure that the rod is seated at the bottom of both notches (C of Figure 18).
4. Lower the rear deflector until it rests on the grass bag.

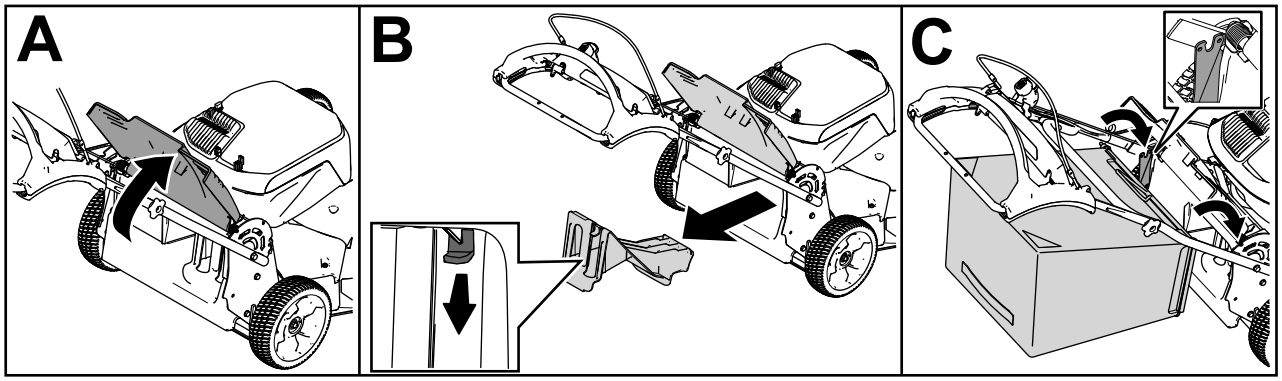

g426289

Figure 18

Removing the Grass Bag

⚠ DANGER

The machine can throw grass clippings and other objects through an opening in the machine housing. Objects thrown with enough force could cause serious personal injury or death to you or to bystanders.

- **Never remove the grass bag and then start the machine without the discharge plug installed on the machine.**
- **Never open the rear deflector on the machine when the machine is running.**

To remove the bag, reverse the steps in Installing the Grass Bag (page 14).

Side-Discharging the Clippings

Use the side discharge for cutting very tall grass.

If the bag is on the machine, remove it and insert the rear-discharge plug; refer to Removing the Grass Bag (page 15) before side-discharging the clippings.

Important: **Ensure that the rear-discharge plug is in place before you recycle the clippings (Figure 17).**

Installing the Side-Discharge Chute

1. Remove the side-discharge deflector bracket and fasteners (A of Figure 19).
2. Unlatch and lift up the side deflector and install the side-discharge chute (B, C, and D of Figure 19).

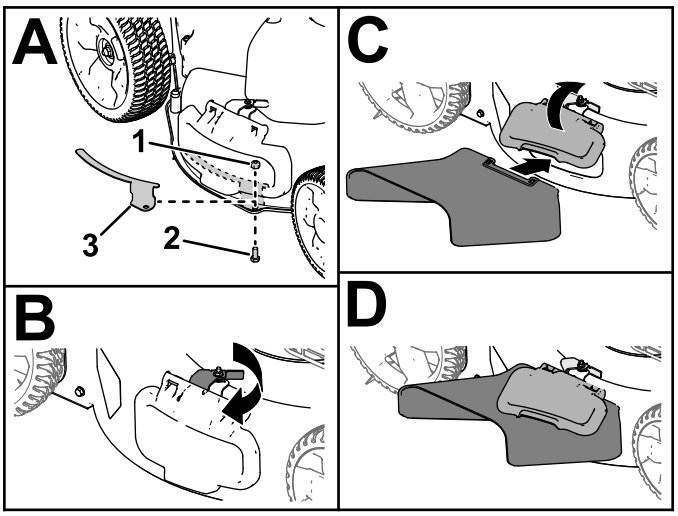

g456257

Figure 19

1. Locknut
2. Bolt
3. Deflector bracket

Removing the Side-Discharge Chute

To remove the side-discharge chute, lift up the side deflector, remove the side-discharge chute, and lower the side-discharge deflector until it latches securely.

Important: **Install the deflector bracket when not using the side-discharge chute (A of Figure 19).**

Operating Tips

General Mowing Tips

- Inspect the area where you will use the machine and remove all objects that the machine could throw.
- Avoid striking solid objects with the blades. Never deliberately mow over any object.
- If the machine strikes an object or starts to vibrate, immediately shut off the machine, wait for all moving parts to stop, remove the battery pack from the machine, and examine the machine for damage.
- For best performance, install new Toro blades before the cutting season begins or when necessary.

Cutting Grass

- Cut only about a third of the grass blade at a time. For improved quality of cut, runtime, and bagging, cut grass at a higher height of cut.
- Do not cut below 51 mm (2 inches) unless the grass is sparse or it is late fall when grass growth begins to slow down.
- When cutting grass over 15 cm (6 inches) tall, mow at the highest cutting height setting and walk slower; then mow again at a lower setting for the best lawn appearance. If the grass is too long, the machine may plug and cause the motor to stall.
- Wet grass and leaves tend to clump on the yard and can cause the machine to plug or the motor to stall. Avoid mowing in wet conditions.
- Be aware of a potential fire hazard in very dry conditions, follow all local fire warnings, and keep the machine free of dry grass and leaf debris.
- Alternate the mowing direction. This helps disperse the clippings over the lawn for even fertilization.
- If the finished lawn appearance is unsatisfactory, try 1 or more of the following:
  - Replace the blades or have them sharpened.
  - Walk at a slower pace while mowing.
  - Raise the cutting height on your machine.
  - Cut the grass more frequently.
  - Overlap cutting swaths instead of cutting a full swath with each pass.

Cutting Leaves

- After cutting the lawn, ensure that half of the lawn shows through the cut leaf cover. You may need to make more than a single pass over the leaves.
- If there are more than 13 cm (5 inches) of leaves on the lawn, mow at a higher cutting height and then again at the desired cutting height.
- Slow down your mowing speed if the machine does not cut the leaves finely enough.

After Operation

Removing the Battery Pack from the Machine

1. Lift up the battery-compartment lid.
2. Press the battery-pack latch to release the battery pack and remove the battery pack.
3. Close the battery-compartment lid.

Charging the Battery Pack

Important: **The battery pack is not fully charged when you purchase it. Before using the tool for the first time, place the battery pack in the charger and charge it until the LED display indicates the battery pack is fully charged. Read all safety precautions.**

Important: **Charge the battery pack only in temperatures that are within the appropriate range; refer to Specifications (page 10).**

Note: At any time, press the battery-charge-indicator button on the battery pack to display the current charge (LED indicators).

1. Ensure that the vents on the battery and charger are clear of any dust and debris.

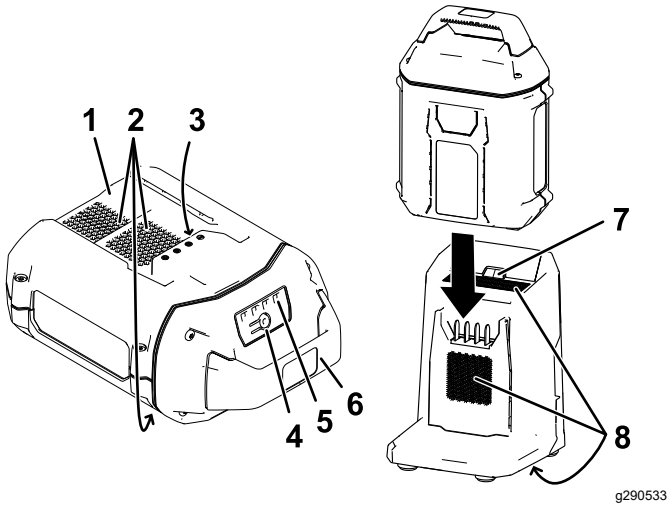

Figure 20

1. Battery pack cavity
2. Battery pack venting areas
3. Battery pack terminals
4. Battery-charge-indicator button
5. LED indicators (current charge)
6. Handle
7. Charger LED indicator light
8. Charger venting areas

2. Line up the cavity in the battery pack (Figure 20) with the tongue on the charger.
3. Slide the battery pack into the charger until it is fully seated (Figure 20).
4. To remove the battery pack, slide the battery backward out of the charger.
5. Refer to the following table to interpret the LED indicator light on the battery charger.

Indicator light	Indicates
Off	No battery pack inserted
Green blinking	Battery pack is charging
Green	Battery pack is charged
Red	Battery pack and/or battery charger is over or under the appropriate temperature range
Red blinking	Battery pack charging fault*

*Refer to Troubleshooting (page 25) for more information.

Important: **The battery can be left on the charger for short periods between uses.**

If the battery will not be used for longer periods, remove the battery from the charger; refer to Storage (page 24).

Cleaning Under the Machine

Service Interval: After each use

⚠ WARNING

A broken or missing washout fitting could expose you and others to thrown objects or blade contact. Contact with a blade or thrown debris can cause injury or death.

- **Replace a broken or missing washout fitting immediately, before using the machine again.**
- **Never put your hands or feet under the machine or through openings in the machine.**

1. Move the machine to a level surface.
2. Shut off the machine and wait for all moving parts to stop before leaving the operating position.
3. Lower the machine to its lowest cutting-height setting. Refer to Adjusting the Cutting Height (page 12).

4. Attach a hose to the washout fitting, and turn the water on high (Figure 21).

   Note: Spread petroleum jelly on the washout fitting O-ring to make the coupling slide on easier and protect the O-ring.

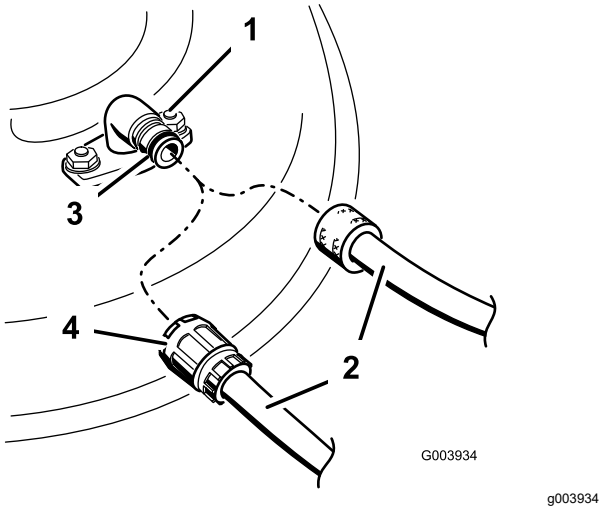

g003934

Figure 21

1. Washout fitting
2. Hose
3. O-ring
4. Coupling

5. Start the machine, engage the blade-control lever, and let the machine run for 1 to 3 minutes with the blades turning.
6. Disengage the blade-control lever, shut off the machine, and wait for all moving parts to stop.
7. Shut off the water and remove the coupling from the washout fitting.

   Note: If the machine is not clean after a single washing, soak it and let it stand for 30 minutes. Then repeat the process.
8. Run the machine again and engage the blades for 1 to 3 minutes to remove the excess water.

Folding the Handle

⚠ WARNING

Folding or unfolding the handle improperly can damage the cables, causing an unsafe operating condition.

- **Do not damage the cable(s) when folding or unfolding the handle.**
- **Ensure that the cable(s) are routed to the outside of the handle.**
- **If a cable is damaged, contact an Authorized Service Dealer.**

1. Remove the electric-start button (A of Figure 22).
2. Push the handle-lock lever rearward to disengage the handle-lock pins (B of Figure 22).
3. Lower the handle towards the front of the machine (C of Figure 22).
4. Loosen the handle knobs securing the upper handle (D of Figure 22).
5. Lower the upper handle (E of Figure 22).

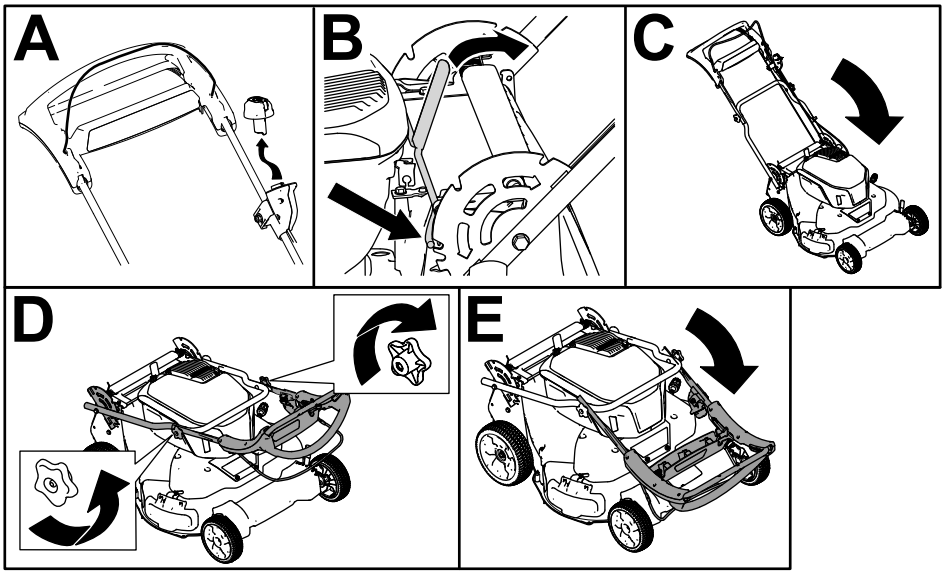

g426676

Figure 22

Maintenance

Recommended Maintenance Schedule(s)

Maintenance Service Interval	Maintenance Procedure
Before each use or daily	• Check the cutting blades.
After each use	• Clean grass clippings and dirt from under the machine.
Every 50 hours	• Service the blade-drive system.
Yearly	• Service the blades.

Lubricating the Machine

You do not need to lubricate the machine; all the bearings have been lubricated at the factory for the life of the machine.

Adjusting the Self-Propel Drive

Whenever you install a new self-propel cable or if the self-propel drive is out of adjustment, adjust the self-propel drive.

1. Turn the adjustment nut counterclockwise to loosen the cable adjustment (Figure 23).

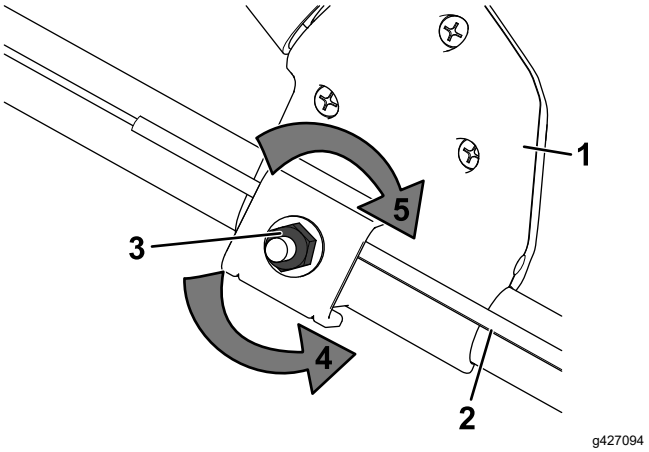

Figure 23

1. Electric-start switch
2. Self-propel-drive cable
3. Adjustment nut
4. Turn the nut counterclockwise to loosen the adjustment.
5. Turn the nut clockwise to tighten the adjustment.

2. Adjust the tension on the cable (Figure 23) by pulling it back or pushing it forward and holding that position.

   Note: Push the cable toward the motor to increase the traction; pull the cable away from the motor to decrease the traction.

3. Turn the adjustment nut clockwise to tighten the cable adjustment.

   Note: Tighten the nut firmly with a socket or wrench.

Servicing the Blade-Drive System

Service Interval: Every 50 hours

1. Remove the blade-drive system cover (Figure 24).

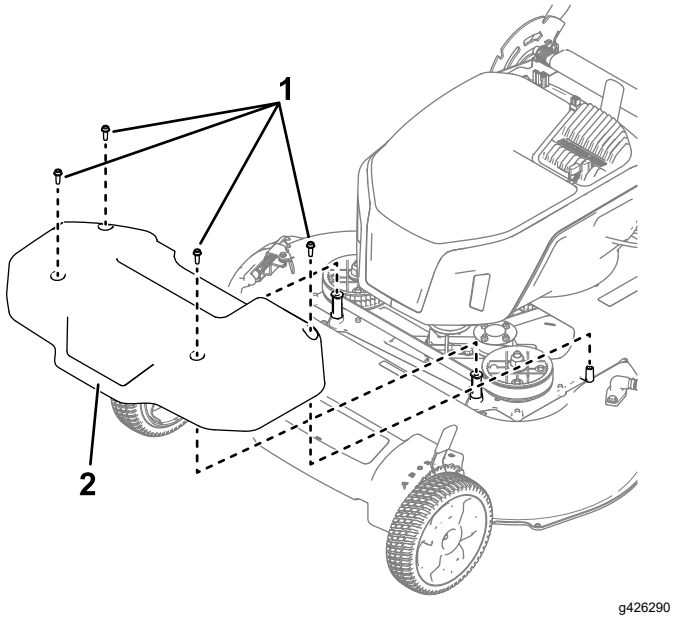

Figure 24

1. Bolts
2. Cover

2. Brush or blow out debris from the inside of the shield and around all the parts.

3. Hold a 0.25 mm (0.010 inch) feeler gauge, a piece of paper, or a note card against the wall and slide it down behind the belt tension spring.

   Note: If there is a visible gap between the gauge and the spring, tighten the adjusting bolt and the nut until the paper barely slides freely in and out of the gap (Figure 25).

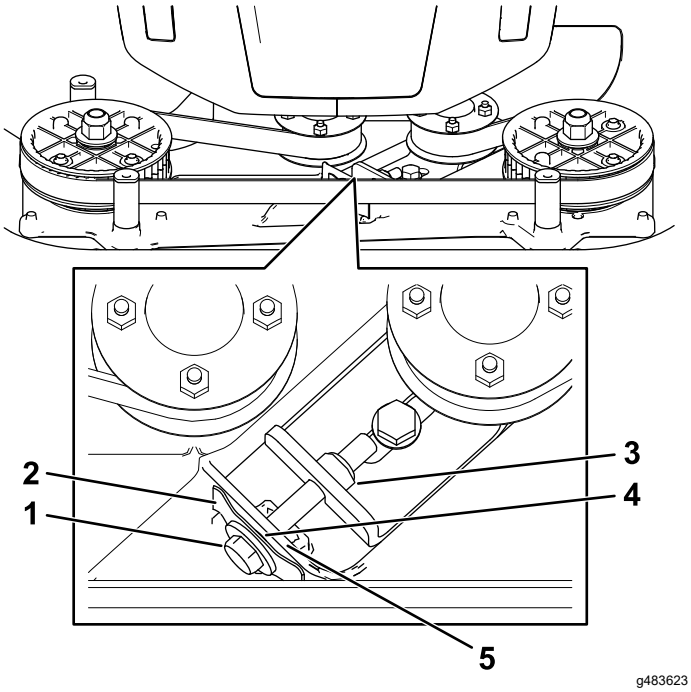

Figure 25

1. Adjusting bolt
2. Belt-tension spring
3. Adjusting nut
4. Gap
5. Wall

Important: **Do not overtighten the adjusting bolt. This could damage the blade-drive belt.**

4. Install the blade-drive system cover that you previously removed.

Servicing the Blades

Service Interval: Yearly

Important: ***You will need a torque wrench to install the blades properly.*** **If you do not have a torque wrench or are uncomfortable performing this procedure, contact an Authorized Service Dealer.**

Examine the blades whenever you run out of fuel. If the blades are damaged or cracked, replace them immediately. If the blade edges are dull or nicked, have them sharpened and balanced, or replace them.

⚠ WARNING

When servicing the blade, the blade can still move even though the power source is off. The blade is sharp; contacting the blade can result in serious personal injury.

- **Keep your hands and feet away from a moving blade.**
- **Wear gloves when servicing the blade.**

Note: Maintain sharp blades throughout the cutting season, because sharp blades cut cleanly without tearing or shredding the grass blades.

Preparing to Service the Cutting Blades

1. Lock the handle in the vertical position (Figure 26); refer to Adjusting the Handle Height (page 12).

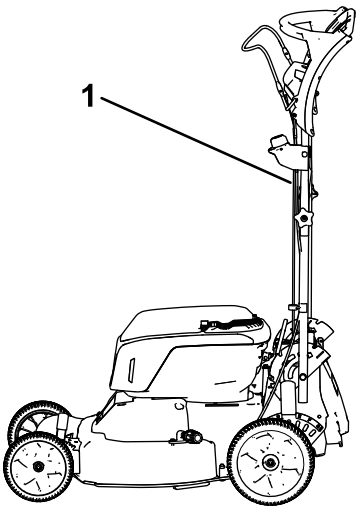

Figure 26

1. Handle locked in the vertical position

2. Tip the machine onto its side, with the washout fitting of the machine up in the air, until the upper handle rests on the ground.

Inspecting the Blades

Service Interval: Before each use or daily

1. Inspect the cutting edges (Figure 27). If the edges are not sharp or have nicks, remove the blades and have them sharpened or replace them.

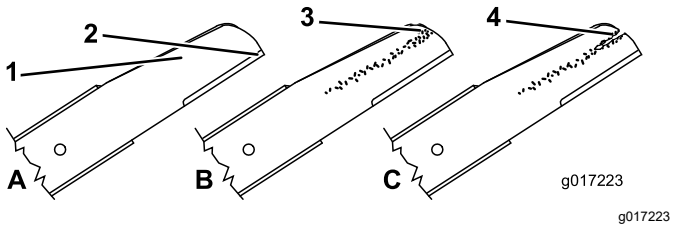

Figure 27

1. Cutting edge
2. Curved area
3. Wear/slot forming
4. Crack

2. Inspect the blades themselves, especially the curved area (Figure 27). If you notice any damage, wear, or a slot forming in this area, immediately replace it with a new blade.

⚠ WARNING

If you allow a blade to wear, a slot will form between the sail and flat part of the blade. Eventually a piece of the blade may break off and be thrown from under the housing, possibly resulting in serious injury to you or bystanders.

- **Inspect the blade periodically for wear or damage.**
- **Never try to straighten a blade that is bent or weld a broken or cracked blade.**
- **Replace a worn or damaged blade.**

3. Check for bent blades; refer to Checking for Bent Blades (page 22).

Checking for Bent Blades

1. Rotate the blades to the position shown in Figure 28.

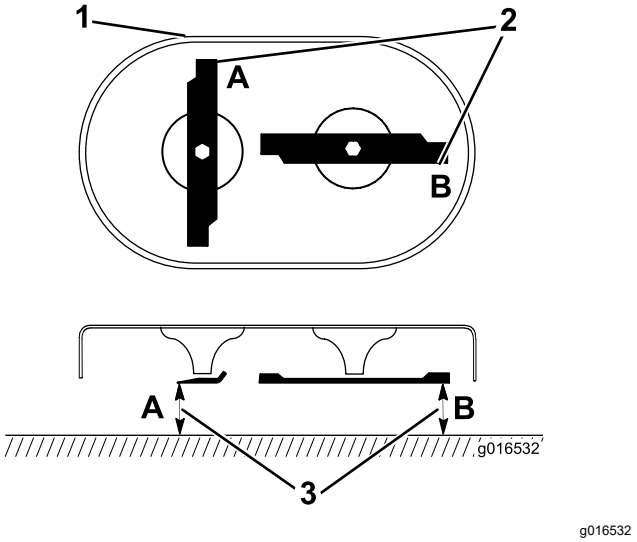

Figure 28

1. Front of cutting deck
2. Measure at locations A and B
3. Measure from the cutting edge to a smooth, level surface

2. Measure from a level surface to the cutting edges at locations **A** and **B** (Figure 28), and record both dimensions.
3. Rotate the blades so that their opposite ends are at locations **A** and **B** (Figure 28).
4. Repeat the measurements in step 2 and record them.

   Note: If the difference between the dimensions **A** and **B** obtained in steps 2 and 4 exceeds 3 mm (1/8 inch), the blade is bent and you will need to replace it. Refer to Removing the Blades (page 22) and Installing the Blades (page 23).

⚠ WARNING

A blade that is bent or damaged could break apart and could seriously injure or kill you or bystanders.

- **Always replace a bent or damaged blade with a new blade.**
- **Never file or create sharp notches in the edges or surfaces of a blade.**

Removing the Blades

Replace the blades when the machine hits a solid object or when a blade is out of balance or bent. Use only genuine Toro replacement blades.

1. Use a block of wood to hold each blade steady and turn the blade bolt counterclockwise as shown in Figure 29.

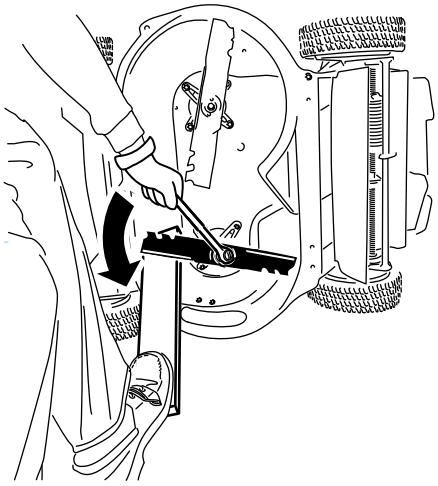

g232790

Figure 29

2. Remove each blade as shown in Figure 30.

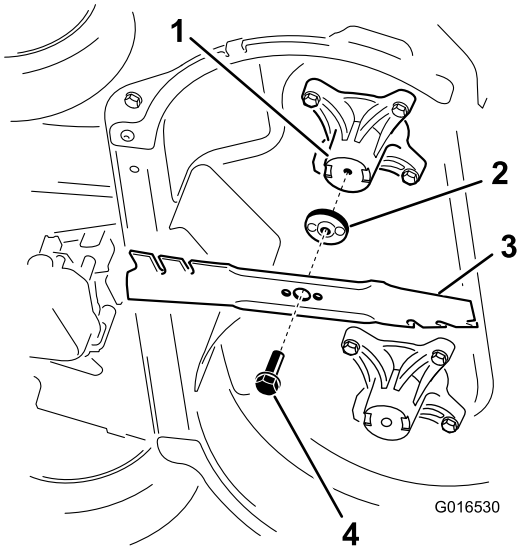

g016530

Figure 30

1. Spindle (2)
2. Blade driver (2)
3. Blade (2)
4. Blade bolt (2)

3. Inspect the pins on the blade drivers for wear and damage.

Installing the Blades

1. Install the first blade so that it is horizontal, along with all mounting hardware as shown in Figure 30.

   Note: Tighten the bolt with your fingers.

   Important: **Position the curved ends of the blades to point toward the machine housing. Be sure to nest the raised areas on each blade driver with the recesses in the head of its corresponding spindle, and the pins on the other side of each blade driver with the holes in its corresponding blade.**

2. Steady each blade with a board and turn the blade bolt clockwise with a torque wrench as shown in Figure 31; torque the blade bolt to **82 N·m (60 ft-lb).**

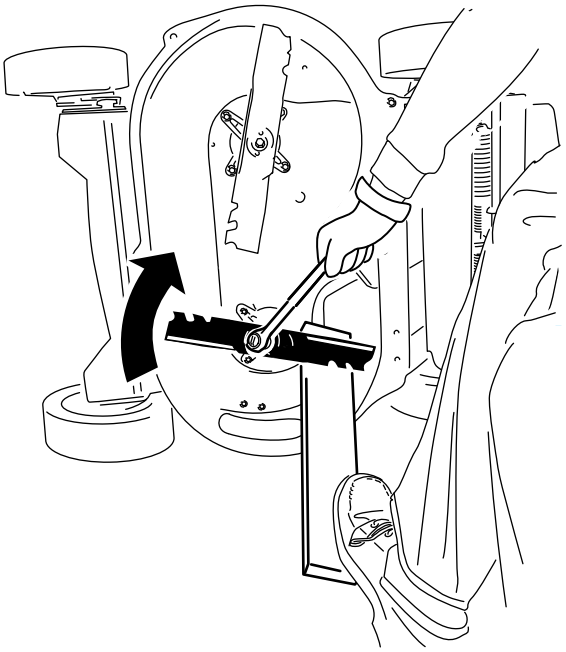

g232801

Figure 31

3. Rotate the installed blade 1/4 turn until it is vertical, and install the other blade in the same manner as the first (refer to step 1).

   Note: The blades should be perpendicular, forming an inverted “T” as shown in Figure 32.

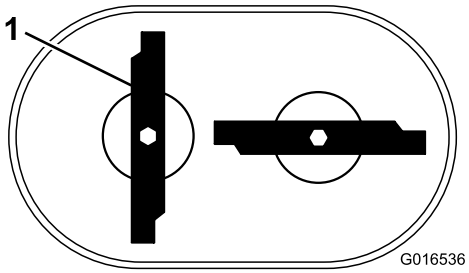

g016536

Figure 32

1. Blade (2)

4. Tighten the second blade; refer to step 2.
5. Rotate the blades by hand a full 360° turn to ensure that they do not touch.

   Note: If the blades touch each other, they are not mounted correctly. Repeat steps 1 through 3, until the blades no longer touch each other.

⚠ WARNING

Incorrectly installing the blades could damage the machine or cause an injury to you or bystanders.

Use care when installing the blades.

Preparing the Battery Pack for Recycling

Important: **Upon removal, cover the terminals of the battery pack with heavy-duty adhesive tape. Do not attempt to destroy or disassemble the battery pack or remove any of its components.**

Contact your local municipality or your Authorized Service Dealer for more information on how to responsibly recycle the battery.

Storage

Important: **Store the machine, battery pack, and charger only in temperatures that are within the appropriate range; refer to** **Specifications (page 10)****.**

Important: **If you are storing the battery pack for the off-season, charge it until 2 or 3 LED indicators turn green on the battery. Do not store a fully charged or fully depleted battery. When you are ready to use the machine again, charge the battery pack until the left indicator light turns green on the charger or all 4 LED indicators turn green on the battery.**

- Disconnect the product from the power supply (i.e., remove the battery pack and electric-start button) and check for damage after use.
- Do not store the machine or charger with the battery pack installed.
- Clean all foreign material from the product.
- When not in use, store the machine, electric-start button, battery pack, and battery charger out of the reach of children.
- Keep the machine, battery pack, and battery charger away from corrosive agents, such as garden chemicals and de-icing salts.
- To reduce the risk of serious personal injury, do not store the battery pack outside or in vehicles.
- Store the machine, battery pack, and battery charger in an enclosed clean, dry area.

Troubleshooting

Perform only the steps described in these instructions. All further inspection, maintenance, and repair work must be performed by an authorized service center or a similarly qualified specialist if you cannot solve the problem yourself.

Problem	Possible Cause	Corrective Action
The machine does not start.	1. The battery is not fully installed in the machine. 2. The battery pack is not charged. 3. The battery pack is damaged. 4. There is another electrical problem with the machine.	1. Remove and then replace the battery into the machine, making sure that it is fully installed and latched. 2. Remove the battery pack from the machine and charge it. 3. Replace the battery pack. 4. Contact an Authorized Service Dealer.
The machine does not run or does not run continuously.	1. There is moisture on the leads of the battery pack. 2. The battery is not fully installed into the tool.	1. Allow the battery pack to dry or wipe it dry. 2. Remove and then replace the battery into the tool making sure that it is fully installed and latched.
The machine does not reach full power.	1. The battery pack charge capacity is too low. 2. The battery air vents are blocked.	1. Remove the battery pack from the machine and fully charge the battery pack. 2. Clean the air vents.
The battery pack loses charge quickly.	1. The battery pack is over or under the appropriate temperature range. 2. The machine is overloaded	1. Move the battery pack to a place where it is dry and the temperature is between 5°C (41°F) and 40°C (104°F). 2. Cut the grass at a higher height of cut or walk at a slower pace while mowing.
The battery charger is not working.	1. The battery charger is over or under the appropriate temperature range. 2. The outlet that the battery charger is plugged into does not have power.	1. Unplug the battery charger and move it to a place where it is dry and the temperature is between 5°C (41°F) and 40°C (104°F). 2. Contact your licensed electrician to repair the outlet.
The machine does not self-propel.	1. The self-propel drive cable is out of adjustment or is damaged.	1. Adjust the self-propel drive cable. Replace the cable if necessary.
The LED indicator light on the battery charger is red.	1. The battery charger and/or battery pack is over or under the appropriate temperature range.	1. Unplug the battery charger and move the battery charger and battery pack to a place where it is dry and the temperature is between 5°C (41°F) and 40°C (104°F).

Problem	Possible Cause	Corrective Action
The LED indicator light on the battery charger is blinking red.	1. There is an error in the communication between the battery pack and the charger.	1. Remove the battery pack from the battery charger, unplug the battery charger from the outlet, and wait 10 seconds. Plug the battery charger into the outlet again and place the battery pack on the battery charger. If the LED indicator light on the battery charger is still blinking red, repeat this procedure again. If the LED indicator light on the battery charger is still blinking red after 2 attempts, properly dispose of the battery pack at a battery recycling facility.
	2. The battery pack is weak.	2. Contact your Authorized Service Dealer if the battery is in warranty, or properly dispose of the battery pack at a battery recycling facility.
The machine is producing a beeping sound.	1. The battery pack is not charged.	1. Remove the battery pack from the machine and charge it.
	2. The machine is in an unsafe position for operation.	2. Ensure that the machine is not at an extreme angle while operating.
	3. The machine is overloaded.	3. Cut the grass at a higher height of cut or walk at a slower pace while mowing.
	4. There is another electrical problem with the machine.	4. Attempt the other troubleshooting actions, if the alarm still sounds, contact an Authorized Service Dealer.
The quality of cut is decreased or unsatisfactory.	1. The blade is dull.	1. Have the blade sharpened or replaced.
	2. The cutting deck has debris buildup.	2. Clean under the machine.
The bagging is decreased or unsatisfactory.	1. The machine is overloaded.	1. Cut the grass at a higher height of cut.
	2. The bag has debris buildup.	2. Clean the inside of the bag of any dust or debris.
The machine is cutting unevenly.	1. The blade is dull.	1. Have the blade sharpened or replaced.
	2. The cutting deck is damaged.	2. Contact an Authorized Service Dealer.
The machine is vibrating.	1. The blade is bent or damaged.	1. Inspect the blade and replace if necessary.

Notes:



Count on it.