Form No. 3455-784 Rev B

TORO®

Count on it.

Parts Catalog

Vista™ 6 Passenger EFI

Shuttle Vehicle

Model No. 08916—Serial No. 400000000 and Up

Register at www.Toro.com.
Original Instructions (EN)

CE

3455-784 B

Ordering Replacement Parts

To order replacement parts, please supply the part number, the quantity, and the description of each part desired.

Understanding Reference Numbers

Each identified part in an illustration has a reference number. The reference number for a part also appears in the parts list, along with other information about the part.

This catalog uses two special reference number formats, one to indicate parts in a service assembly and another to indicate the quantity of a given part in an illustration.

Service Assembly Reference Numbers

Parts in service assemblies have reference numbers in the form a:b. The a represents the reference number of the entire service assembly and the b represents a sequential number unique to each part within the service assembly.

For example, a wheel assembly might be identified by reference number 6, the tire by 6:1, the valve by 6:2, and the wheel by 6:3. When you order the assembly identified by reference number 6, you receive all parts identified by reference numbers 6:1,6:2, and 6:3. However, you may also order any part individually. Reference numbers of this type appear in illustration and in parts lists.

Reference Numbers Indicating Quantity

In an illustration, if a reference number indicates more than one part, the reference number has the form nX y. The n represents the quantity of the part, the X is the multiplication symbol, and the y represents the reference number.

For example, in an illustration, the reference number 2X 37 means that two of the parts identified by reference number 37 are indicated.

Contents

Frame Assembly 4
Front Suspension Assembly 6
Steering Assembly 8
Rear Suspension Assembly 10
Brake and Throttle Pedal Assembly 12
Front and Rear Brake Assembly 14
Master Cylinder Assembly No. 104-6782 16
Brake Caliper Assembly No. 161-1890 17
Hood, Front Fenders and Dash Assembly 18
Main Seat and Rear Fenders Assembly 20
Passenger Seat Assembly 22
Rear Facing Seat Assembly 24
Engine and Transaxle Assembly 26
Primary Clutch Assembly No. 147-4088 28
Transaxle Assembly No. 140-9807 30
Secondary Clutch Assembly No. 119-6011 32
Starter Generator Assembly No. 131-8444 33
Battery Assembly 34
Electrical Assembly 36
Wire Harness Assembly No. 122-2217 38
Fuel System Assembly 40
Fuel Tank Assembly No. 144-5395 42
Attachments and Accessories 44

© 2024—The Toro® Company
8111 Lyndale Avenue South
Bloomington, MN 55420

Contact us at www.Toro.com.
Printed in the USA.
All Rights Reserved

Frame Assembly

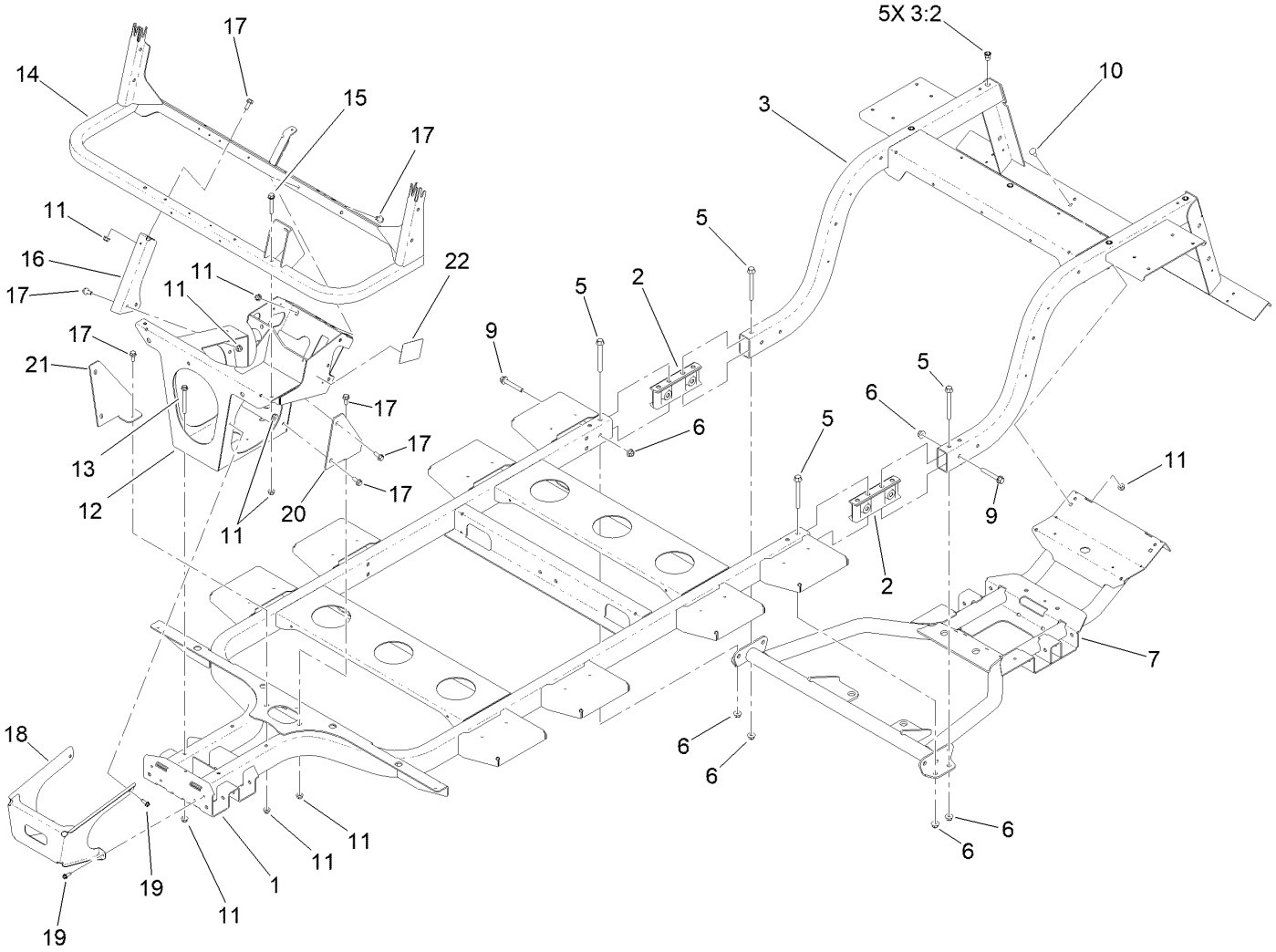

Frame Assembly (continued)

Ref.	Part Number	Qty.	Description
1	140-0798	1	Front Frame ASM
2	144-5479	2	Connector-Frame
3	144-5465	1	Rear Frame ASM
3:2	138-2899	5	Nut-Clinch
5	139-3370	8	Screw-HF
6	139-3380	12	Nut-HF
7	140-9775	1	Subframe ASM
9	144-5559	4	Screw-HHF
10	3230-1	2	Bolt-CARR
11	104-8300	19	Nut-HF, NI
12	140-0777-03	1	Shock Tower ASM
13	126-4687	4	Screw-HHF
14	140-9712-03	1	Canopy Support ASM
15	140-9909	2	Screw-HHF
16	140-0759-03	1	Support, Canopy
17	3234-47	11	Screw-HHF
18	140-0940-03	1	Bracket-Support, Bumper
19	49-2040	4	Screw-HWHTF
20	145-7152-03	1	Gusset-Frame, LH
21	145-7153-03	1	Gusset-Frame, RH
22	144-5579	1	Decal - Vista EFI Service

Front Suspension Assembly

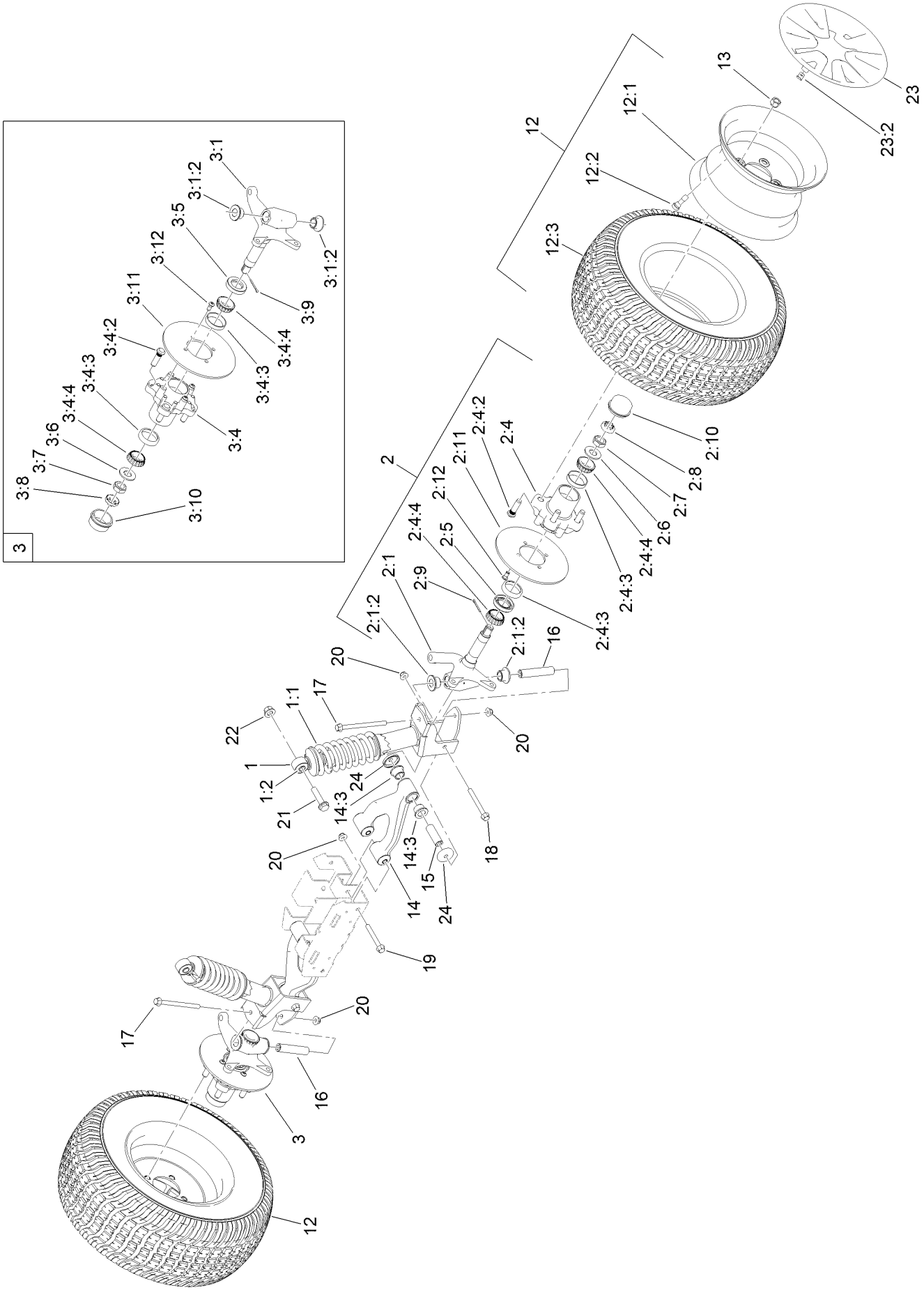

Front Suspension Assembly (continued)

Ref.	Part Number	Qty.	Description
1	144-5428	2	Strut ASM (140 Lb/In, 3.00)
1:1	133-0556	1	Spring-Coil
1:2	131-8574	1	Isolator-Shock
2		1	LH Spindle ASM ●
2:1	144-5468	1	Spindle ASM LH
2:1:2	140-4615	2	Bushing-Flange
2:4	144-5470	1	Front Hub ASM
2:4:2	10-6830	4	Stud-Type, Drive
2:4:3	254-72	2	Bearing-Cup, Tapered
2:4:4	254-94	2	Bearing-Cone, Tapered
2:5	112-1690	1	Seal-Oil
2:6	93-0309	1	Washer-Tab
2:7	3220-7	1	Nut-Jam
2:8	93-0307	1	Nut-Lock, Retainer
2:9	3272-12	1	Pin-Cotter
2:10	241-119	1	Cap-Dust
2:11	139-4474	1	Rotor-Brake
2:12	121-9671	4	Screw-HSBH
3		1	RH Spindle ASM ●
3:1	144-5469	1	Spindle ASM RH
3:1:2	140-4615	2	Bushing-Flange
3:4	144-5470	1	Front Hub ASM
3:4:2	10-6830	4	Stud-Type, Drive
3:4:3	254-72	2	Bearing-Cup, Tapered
3:4:4	254-94	2	Bearing-Cone, Tapered
3:5	112-1690	1	Seal-Oil
3:6	93-0309	1	Washer-Tab
3:7	3220-7	1	Nut-Jam
3:8	93-0307	1	Nut-Lock, Retainer
3:9	3272-12	1	Pin-Cotter
3:10	241-119	1	Cap-Dust
3:11	139-4474	1	Rotor-Brake
3:12	121-9671	4	Screw-HSBH
12	140-9801	2	Tire ASM
12:1	131-8317	1	Wheel
12:2	232-27	1	Stem-Valve
12:3	140-9794	1	Tire
13	242-50	8	Nut-Lug
14	161-1819	2	Control Arm ASM
14:3	147-3983	2	Bushing-Flange
15	144-5634	2	Sleeve-Outer
16	131-8582	2	Sleeve-Kingpin
17	139-3350	2	Screw-HF
18	139-3370	2	Screw-HF
19	140-9853	4	Screw-HF
20	139-3380	8	Nut-HF
21	3234-46	2	Screw-HHF
22	99-5107	2	Nut-Lock
23	140-0933	2	Wheel Cover ASM
23:2	140-0932	3	Clip-Cover, Wheel
24	140-9793	4	Pin Seal

● Not serviced separately

Steering Assembly

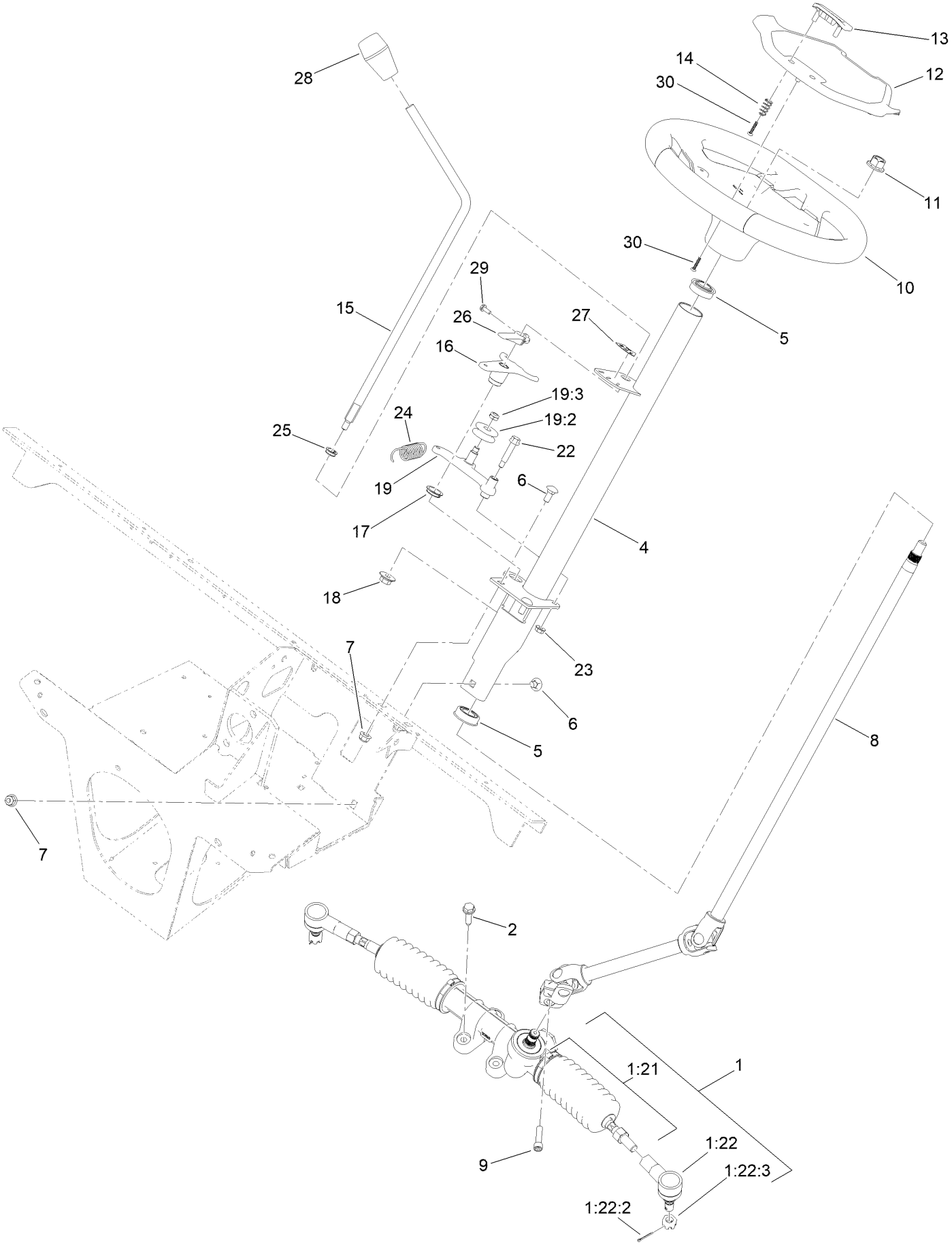

Steering Assembly (continued)

Ref.	Part Number	Qty.	Description
1	140-9830	1	Steering Rack ASM
1:21	140-9829	1	Kit-Tie Rod ASM
1:22	140-4592	1	Kit-Rod End ASM
1:22:2	3272-42	1	Pin-Cotter
1:22:3	140-2493	1	Nut-Hex, Slotted
2	32144-49	4	Screw-HWHTF
4	140-9805	1	Steering Column ASM-Gas
5	112-3262	2	Bearing
6	3230-1	3	Bolt-CARR
7	104-8300	3	Nut-HF, NI
8	140-9704	1	Shaft-Steering
9	145-7145	1	Screw-HSH,Lock
10	144-5570	1	Steering Wheel ASM
11	99-5107	1	Nut-Lock
12	144-5567	1	Cover-Wheel, Steering
13	144-5566	1	Clip-Wheel, Steering
14	144-5537	2	Spring-Compression
15	144-5439	1	Shaft-Shift
16	144-5438	1	Shift Arm
17	114-8893	1	Bushing-Clip
18	32128-30	1	Nut-HF
19	138-6432	1	Detent Arm Assembly
19:2	145-2095	1	Bushing-Detent, Shift
19:3	3296-47	1	Nut-Lock,NI
22	116-6876	1	Screw-Shoulder
23	32128-33	1	Nut-HF
24	131-8419	1	Spring-Extension
25	110-3318	1	Bushing-Snap
26	144-5419	1	Indicator-Gear
27	131-8463	1	Decal-Shift
28	131-8473	1	Knob-Tapered
29	117-5036	1	Screw-Plastic, HWH
30	94-4496	5	Screw-PPH

Rear Suspension Assembly

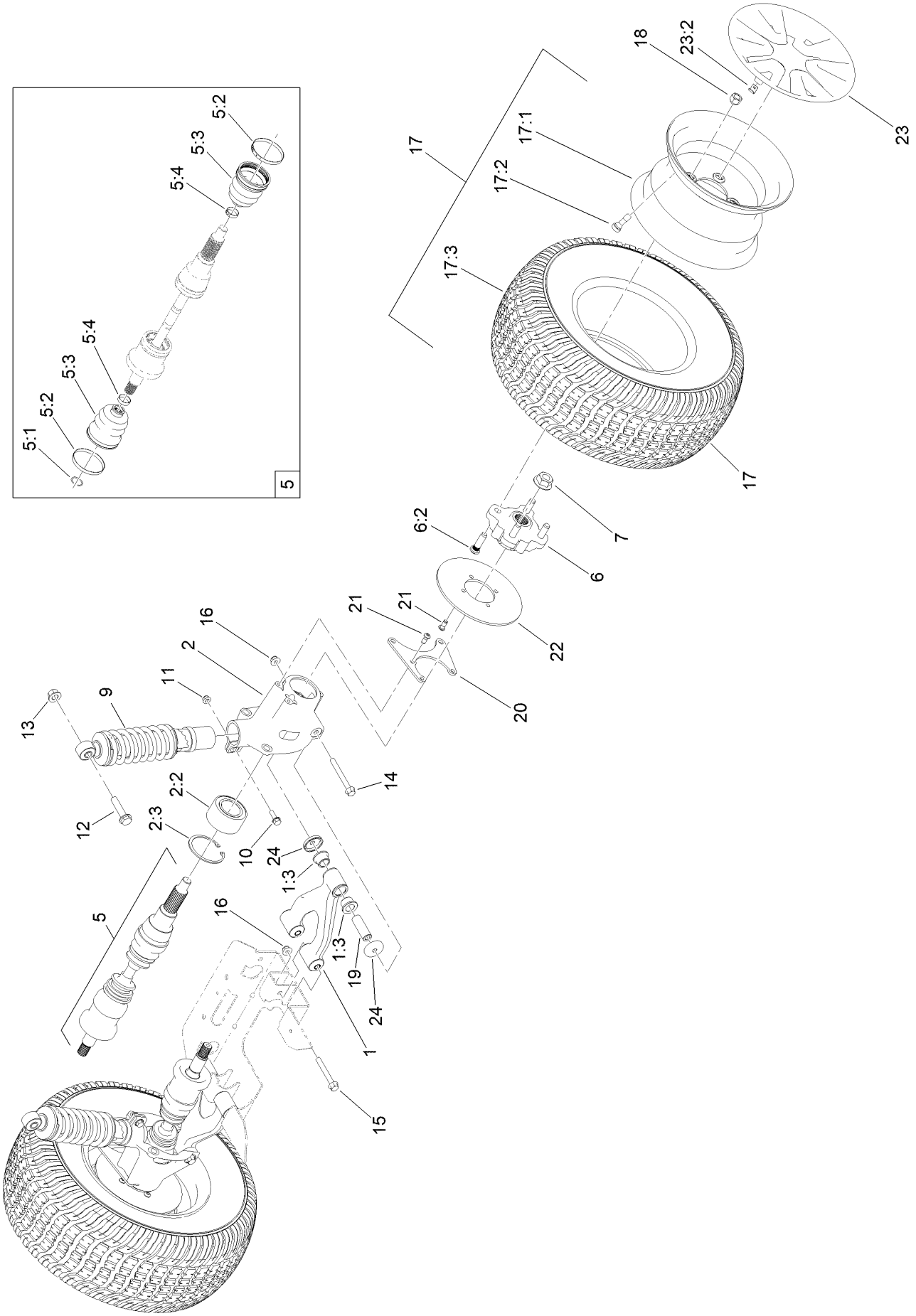

Rear Suspension Assembly (continued)

Ref.	Part Number	Qty.	Description
1	161-1819	2	Control Arm ASM
1:3	147-3983	2	Bushing-Flange
2	144-5555	2	Rear Upright ASM
2:2	133-7272	1	Bearing-Ball
2:3	144-2207	1	Ring-Retaining
5	145-7062	2	Cv Axle
5:1	145-7195	1	Circlip
5:2	145-7196	2	Clamp
5:3	145-7197	2	Boot-Cv
5:4	145-7198	2	Clamp-Cv
6	145-7151	2	Rear Hub ASM
6:2	10-6830	4	Stud-Type, Drive
7	32128-53	2	Nut-HF
9	139-4291	2	Shock ASM
10	3234-29	2	Screw-HHF
11	104-8300	2	Nut-HF, NI
12	3234-46	2	Screw-HHF
13	99-5107	2	Nut-Lock
14	139-3370	2	Screw-HF
15	140-9853	4	Screw-HF
16	139-3380	6	Nut-HF
17	140-9801	2	Tire ASM
17:1	131-8317	1	Wheel
17:2	232-27	1	Stem-Valve
17:3	140-9794	1	Tire
18	242-50	8	Nut-Lug
19	144-5634	2	Sleeve-Outer
20	140-9749	2	Plate-Caliper
21	121-9671	14	Screw-HSBH
22	139-4474	2	Rotor-Brake
23	140-0933	2	Wheel Cover ASM
23:2	140-0932	3	Clip-Cover, Wheel
24	140-9793	4	Pin Seal

Brake and Throttle Pedal Assembly

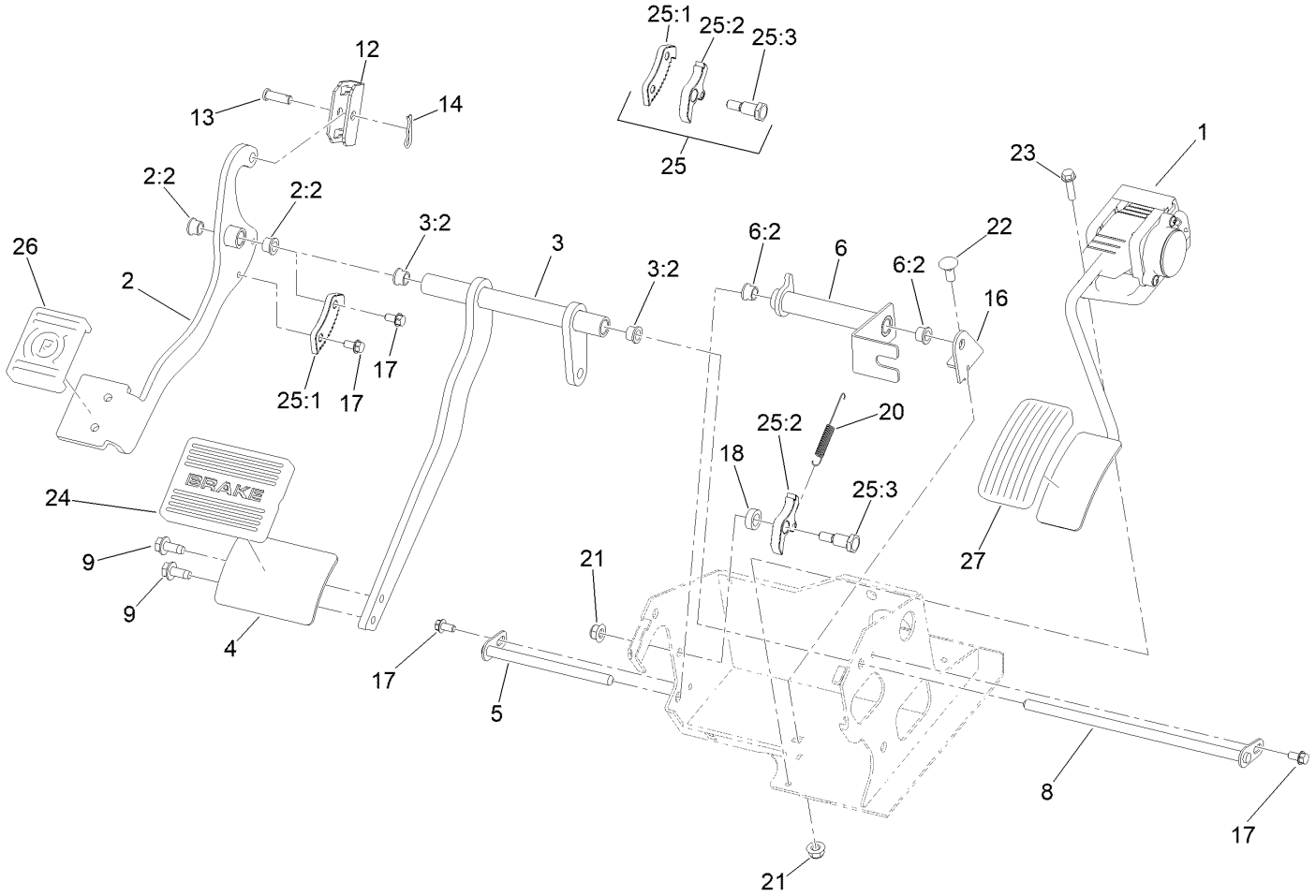

Brake and Throttle Pedal Assembly (continued)

Ref.	Part Number	Qty.	Description
1	140-9859	1	Throttle-Electronic
2	147-4093	1	Parking Brake Pedal ASM
2:2	256-116	2	Bushing-Flange
3	144-5492	1	Brake Pedal ASM
3:2	256-116	2	Bushing-Flange
4	138-5763-03	1	Brake Pedal ASM
5	140-9810	1	Flag Pin ASM
6	144-5491	1	Trip Pivot ASM
6:2	256-116	2	Bushing-Flange
8	140-0772	1	Flag Pin ASM
9	32144-70	2	Screw-HWHTF
12	87-3480	1	Bracket-Equalizer, Cable
13	1-808280	1	Pin-Clevis
14	1-806003	1	Pin-Cotter
16	140-9814	1	Plate-Pivot
17	32144-4	4	Screw-HWH
18	256-276	1	Spacer-Nylon
20	140-9858	1	Spring-Extension
21	104-8300	2	Nut-HF, NI
22	3230-1	1	Bolt-CARR
23	32144-86	3	Screw-HWHTF
24	7-3900	1	Pad-Brake
25	145-7274	1	Kit-Brake Pawl
25:1		1	Plate-Ratcheting ●
25:2		1	Pawl-Parking ●
25:3		1	Screw-Shoulder ●
26	144-5551	1	Pad-Parking Brake
27	140-4572	1	Pedal Pad-Throttle

● Not serviced separately

Front and Rear Brake Assembly

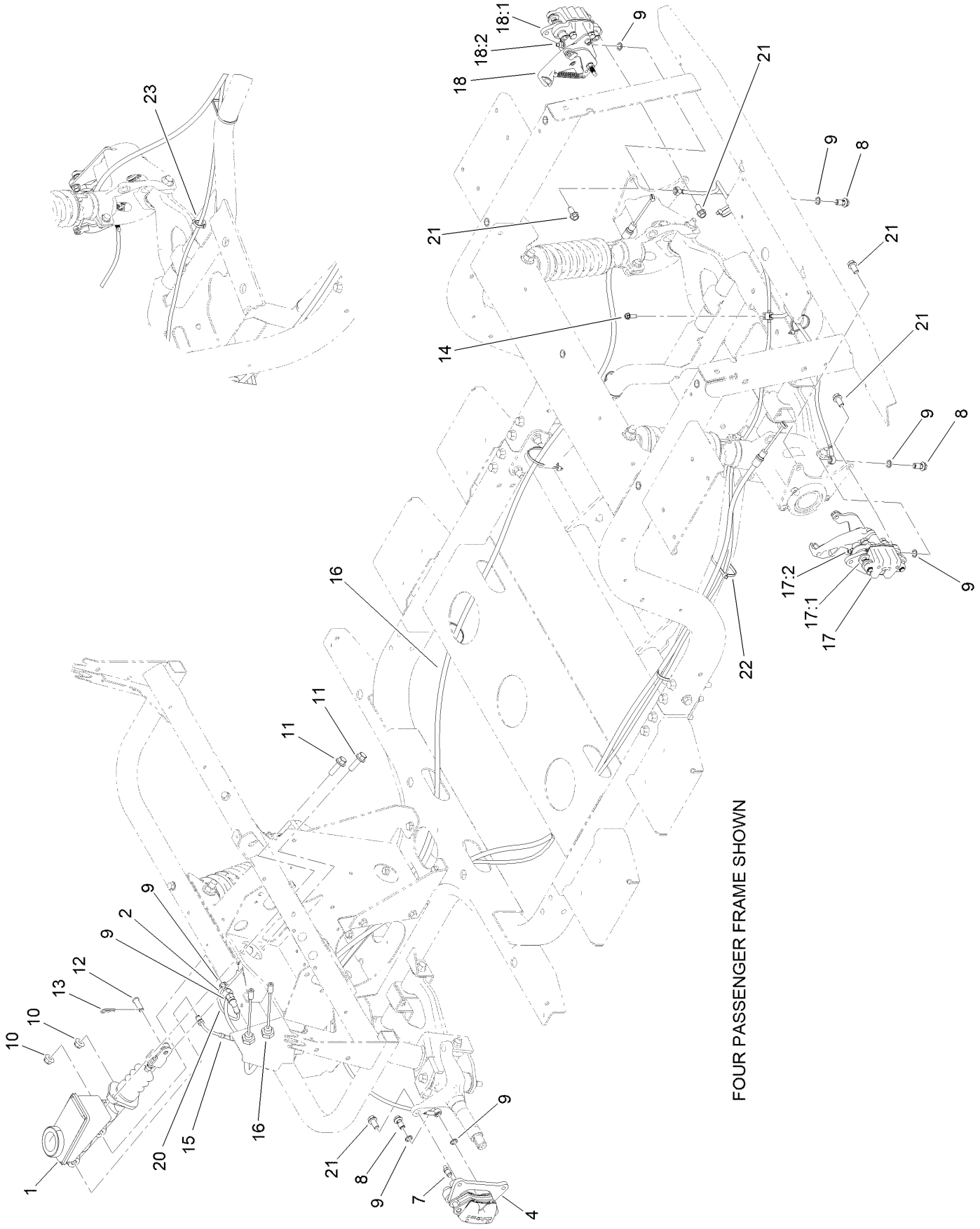

Front and Rear Brake Assembly (continued)

Ref.	Part Number	Qty.	Description
1	104-6782	1	Master Cylinder ASM
2	140-9993	1	Brake Line ASM
4	161-1890	2	Brake Caliper ASM
7	119-9509	2	Screw-Bleed
8	120-4875	4	Bolt-Flange, Banjo
9	115-2341	10	Washer-Banjo
10	104-8301	2	Nut-HF, NI
11	119-4061	2	Screw-HHF
12	283-2	1	Pin-Clevis
13	1-806003	1	Pin-Cotter
14	49-2040	2	Screw-HWHTF
15	140-9996	1	Brake Line ASM
16	144-5357	2	Cable-Parking
17	140-2585	1	Brake Caliper ASM, LH
17:1	140-2595	1	Brake Pad Service Kit (Rear, Qty 4)
17:2	119-9509	1	Screw-Bleed
17:3	136-6328	2	Spring-Rattle, Anti ●
18	140-2590	1	Brake Caliper ASM, RH
18:1	140-2595	1	Brake Pad Service Kit (Rear, Qty 4)
18:2	119-9509	1	Screw-Bleed
18:3	136-6328	2	Spring-Rattle, Anti ●
20	144-2227	1	Switch-Brake, Pressure
21	144-5550	8	Screw-Spl
22	3290-378	10	Tie-Cable
23	32180-030	1	Clip-Tie

● Not illustrated

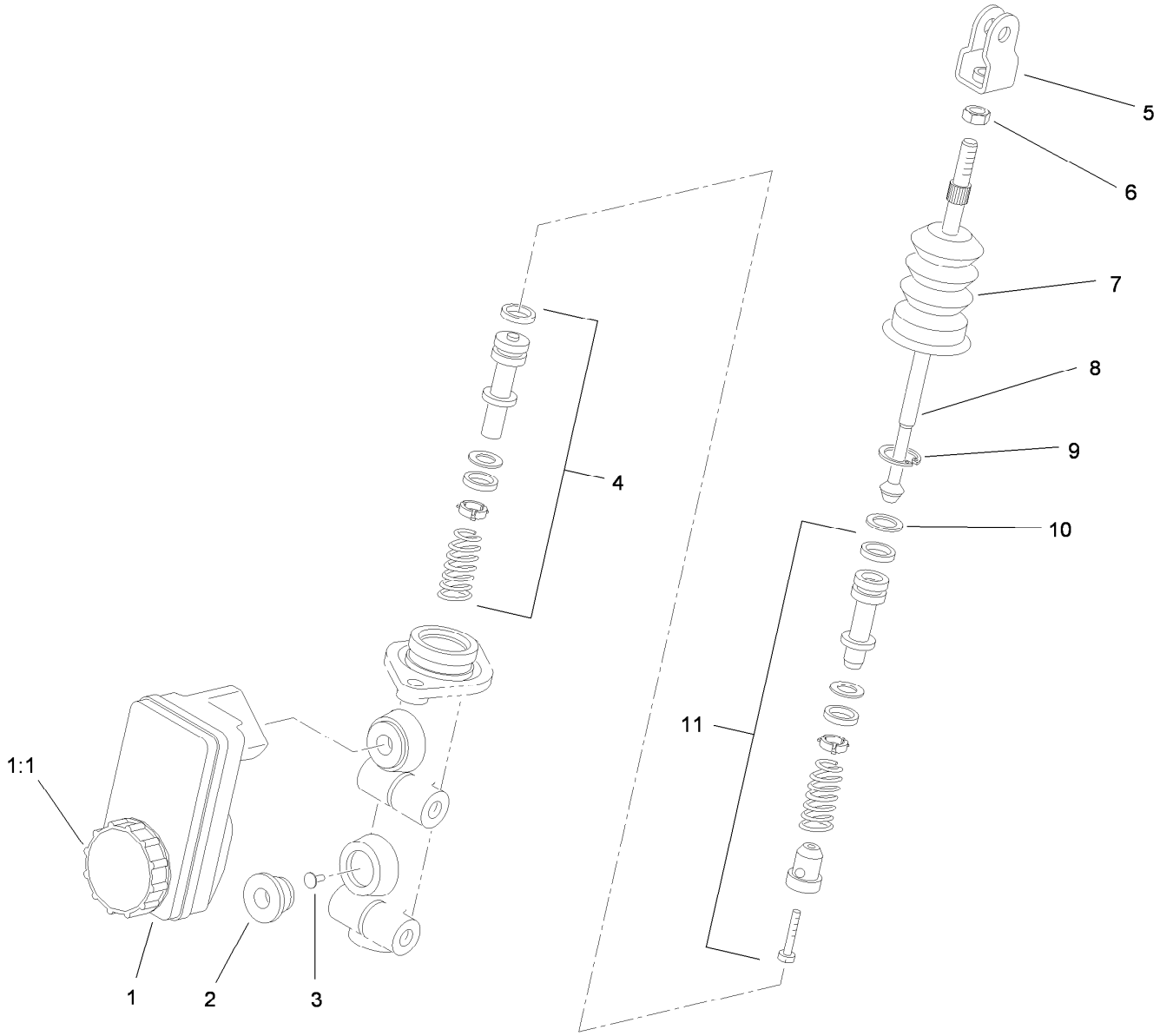

Master Cylinder Assembly No. 104-6782

Ref.	*Part Number*	*Qty.*	*Description*
1	104-6845	1	Reservoir ASM
1:1	92-4112	1	Cap ASM
2	93-8971	2	Seal-Port, Flange
3	92-4103	1	Pin-Stop
4	92-4102	1	Secondary Piston ASM
5	92-4110	1	Clevis
6	21-0360	1	Nut-Hex
7	94-5209	1	Cover-Dust
8	94-5210	1	Rod-Push
9	92-4109	1	Ring-Snap
10	92-4108	1	Retainer-Washer
11	92-4101	1	Primary Piston ASM

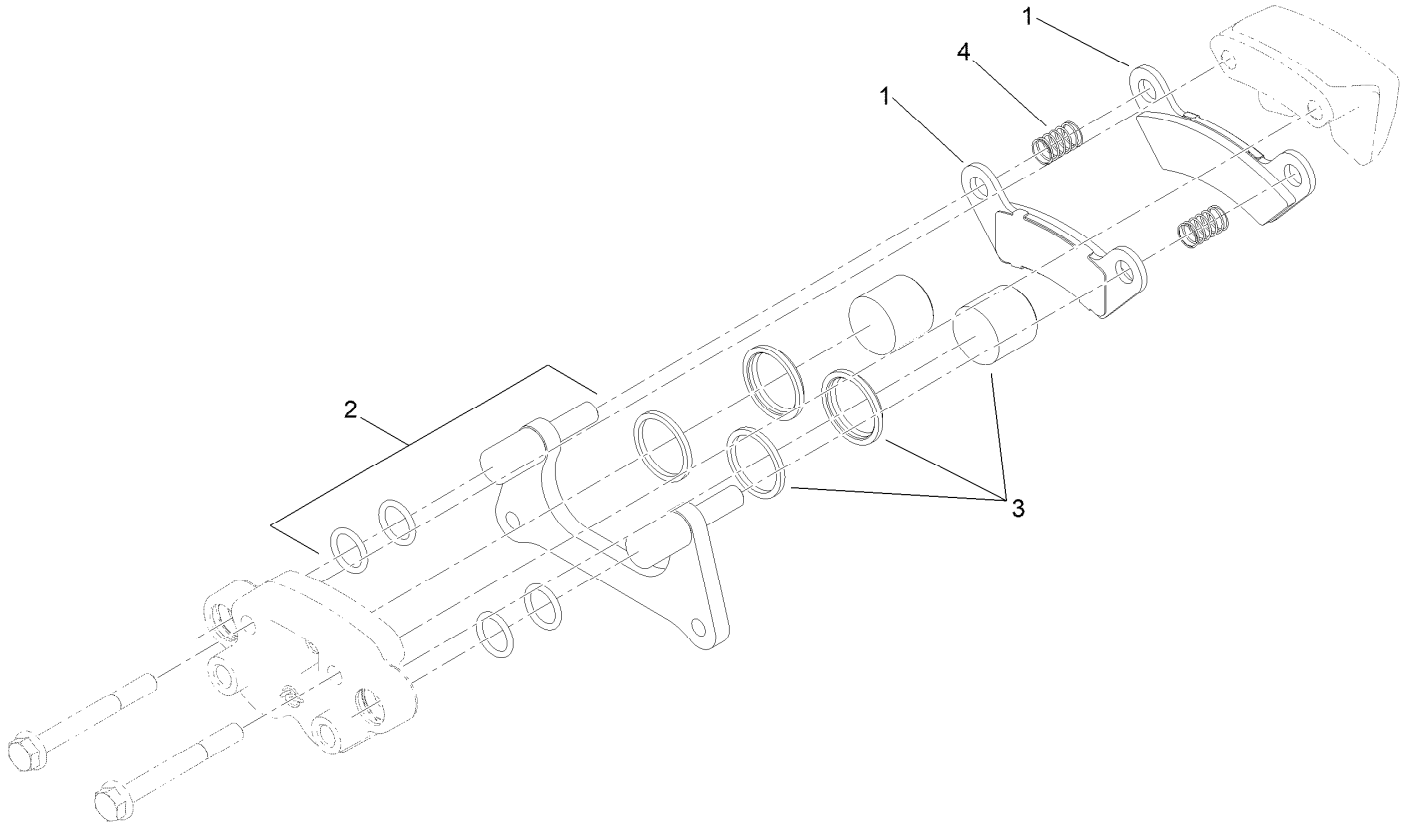

Brake Caliper Assembly No. 161-1890

Ref.	*Part Number*	*Qty.*	*Description*
1	140-2580	1	Brake Pad Service Kit (Front, Qty 4)
2	119-9511	1	Bracket Kit
3	133-0614	1	Piston Kit
4	161-1889	2	Spring-Compression, Service

Hood, Front Fenders and Dash Assembly

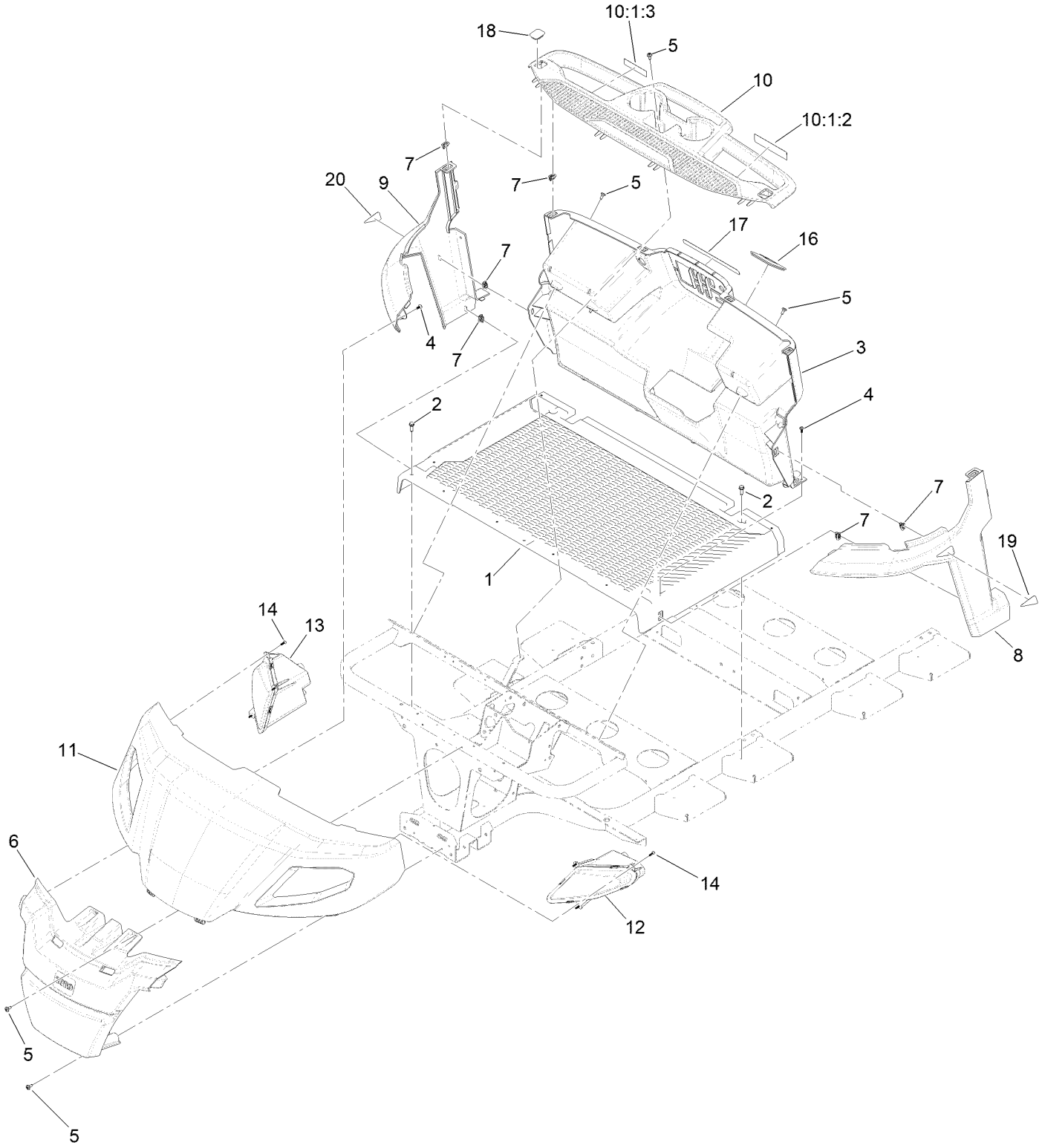

Hood, Front Fenders and Dash Assembly (continued)

Ref.	Part Number	Qty.	Description
1	140-0850SP	1	Floor-Front
2	701243	5	Screw-Thd Roll, HWH
3	140-9901SP	1	Dash
4	138-5775	10	Screw-Delta Point
5	120-7950	8	Screw-Torx
6	140-0845SP	1	Bumper-Front
7	140-9908	10	Clip-Trim
8	140-0842SP	1	Fender-Front, LH
9	140-0843SP	1	Fender-Front, RH
10	145-7051SP	1	Dash-Top 6/8P
10:1:2	144-5571	1	Decal-Vista Safety, Driver
10:1:3	140-0920	1	Decal-Vista Safety, Passenger
11	145-7200SP	1	Hood-Vista, Beige
12	140-0890	1	Headlight-LH
13	140-0891	1	Headlight-RH
14	140-9930	6	Screw-Bhf, Plastic
16	140-9903	1	Grommet-Column, Steering
17	144-5572	1	Decal-Control Panel, Gas
18	145-7122	2	Cap-Plug, Dash
19	140-0941	1	Decal-Reflector, Front, LH
20	140-0942	1	Decal-Reflector, Front, RH

Main Seat and Rear Fenders Assembly

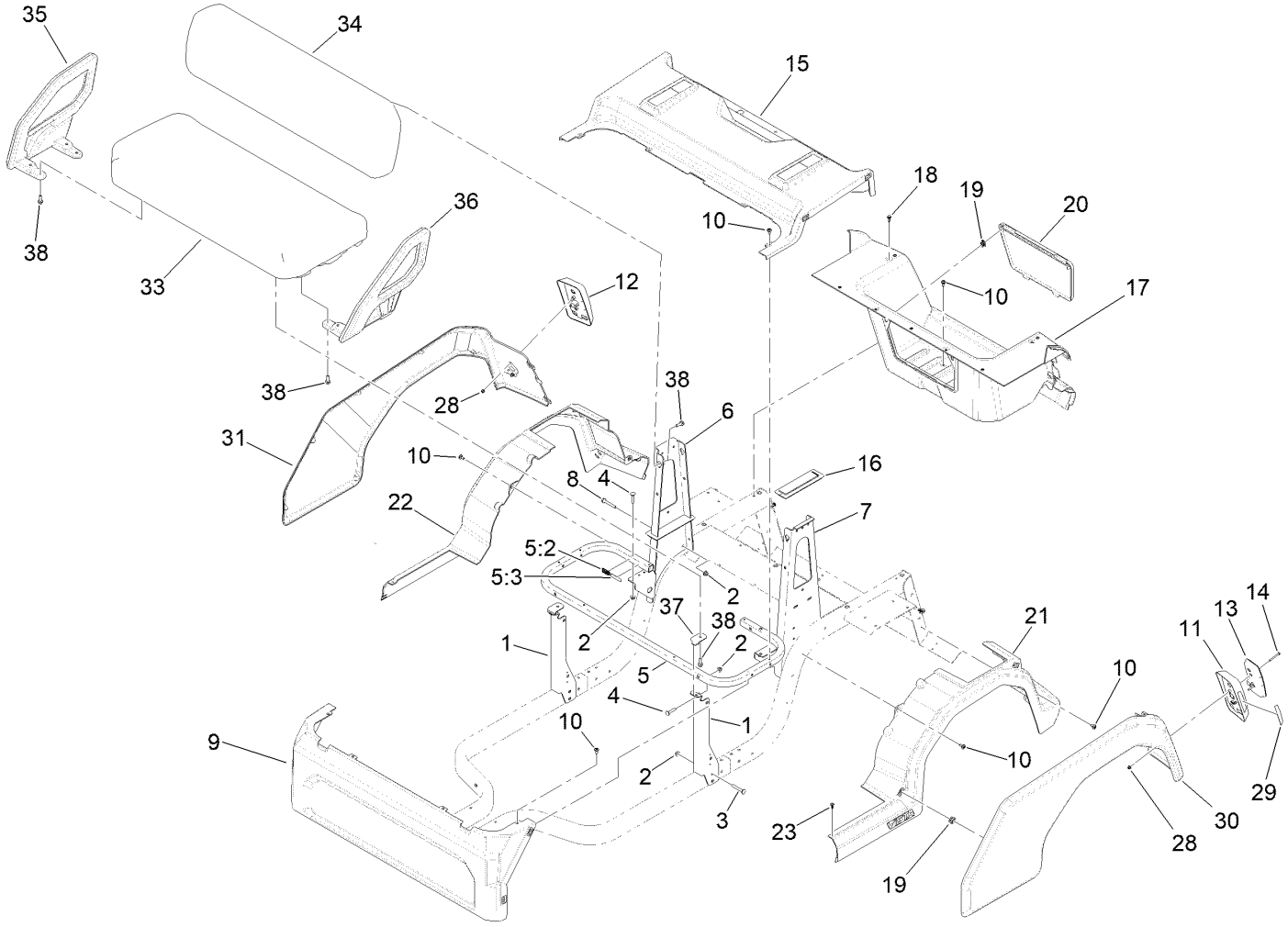

Main Seat and Rear Fenders Assembly (continued)

Ref.	Part Number	Qty.	Description
1	140-0800-03	2	Bracket-Support, Seat Frame
2	104-8300	12	Nut-HF, NI
3	3230-7	4	Bolt-CARR
4	3230-4	4	Bolt-CARR
5	145-7056	1	Gas Seat Tube
5:2	127-3866	1	Decal-Warning, Hot Surface
5:3	120-9570	1	Decal-Warning
6	144-5623-03	1	Bracket-Back, RH
7	144-5622-03	1	Bracket-Back, LH
8	139-4479	4	Screw-HHF
9	140-0849SP	1	Panel-Base, Seat
10	120-7950	14	Screw-Torx
11	140-9910	1	Housing-Tail Light, LH
12	140-9911	1	Housing-Tail Light, RH
13	139-2071	2	Light-Rear Tail/Stop/Turn
14	3250-48	4	Screw-PPH
15	140-0846SP	1	Cover-Rear
16	140-9904	2	Grommet-Bracket, Seat
17	140-0851SP	1	Tub-Rear
18	125-9622	8	Rivet-Blind
19	140-9908	14	Clip-Trim
20	140-0866	1	Door-Access, Rear
21	140-0847SP	1	Fender-Rear, LH
22	140-0848SP	1	Fender-Rear, RH
23	138-5775	2	Screw-Delta Point
28	138-0719	4	Nut-HF
29	140-0943	2	Decal-Reflector, Rear
30	145-7210SP	1	Panel-Rear, LH Beige
31	145-7220SP	1	Panel-Rear, RH Beige
33	140-9941SP	1	Seat Bottom ASM-Beige
34	140-9943SP	1	Seat Backrest ASM-Beige
35	140-0804SP	1	Restraint-Hip, RH
36	140-0802SP	1	Restraint-Hip, LH
37	140-0812	2	Bracket-Hinge, Seat
38	115-5142	14	Screw-HHF

Passenger Seat Assembly

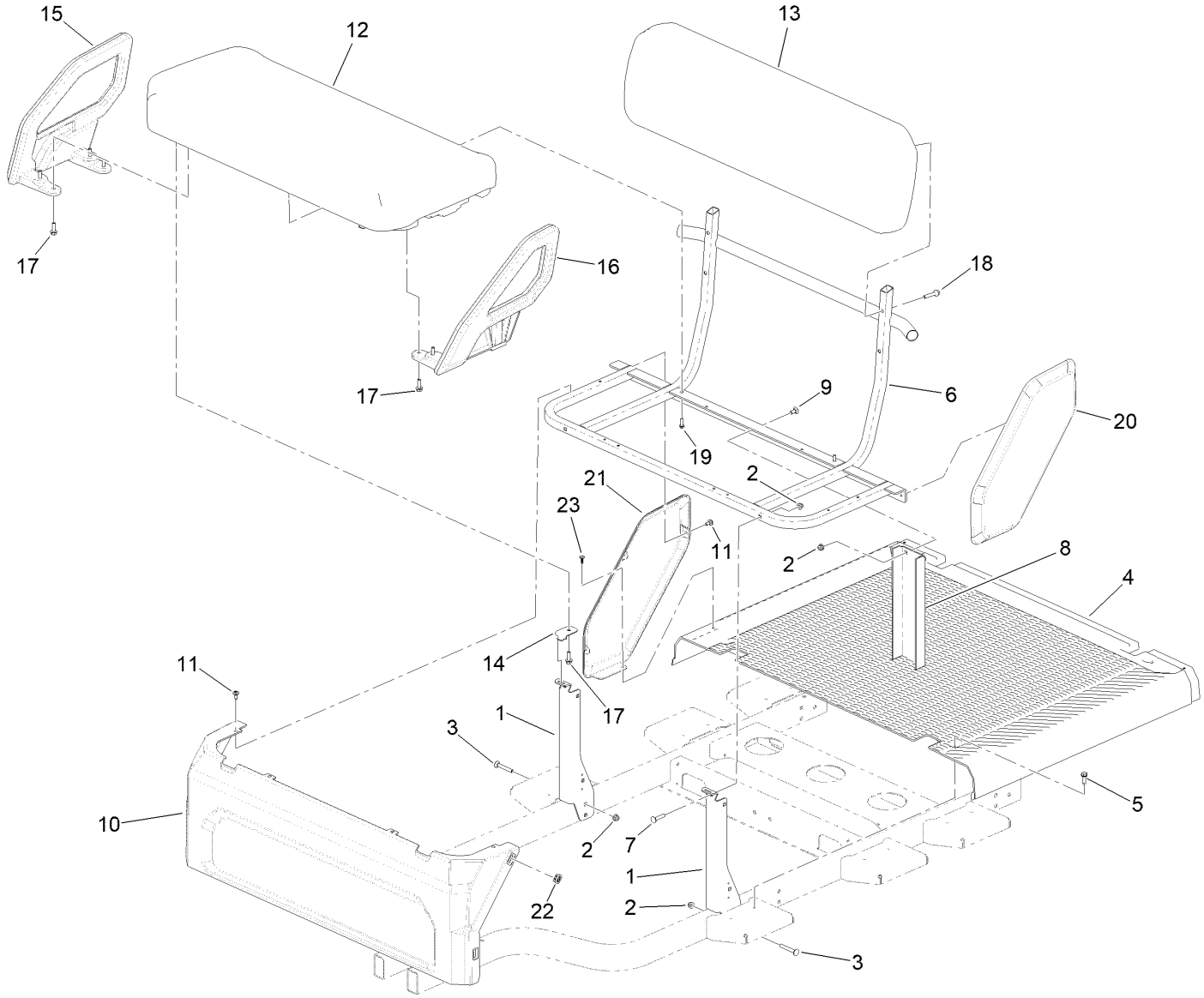

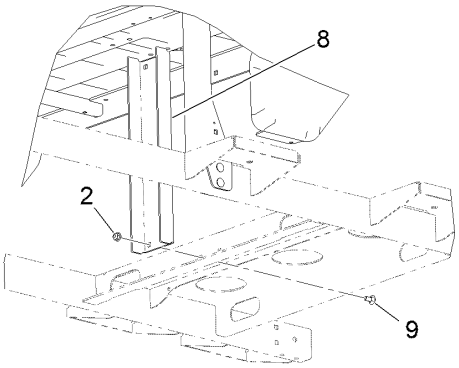

BOTTOM VIEW

Passenger Seat Assembly (continued)

Ref.	Part Number	Qty.	Description
1	140-0800-03	2	Bracket-Support, Seat Frame
2	104-8300	10	Nut-HF, NI
3	3230-7	4	Bolt-CARR
4	140-0870SP	1	Floor-Middle
5	701243	4	Screw-Thd Roll, HWH
6	140-9785SP	1	Seat Support ASM
7	3230-4	2	Bolt-CARR
8	140-9753-05	1	Post-Center
9	3230-1	4	Bolt-CARR
10	140-0849SP	1	Panel-Base, Seat
11	120-7950	6	Screw-Torx
12	140-9941SP	1	Seat Bottom ASM-Beige
13	140-9943SP	1	Seat Backrest ASM-Beige
14	140-0812	2	Bracket-Hinge, Seat
15	140-0804SP	1	Restraint-Hip, RH
16	140-0803SP	1	Restraint-Hip, Driver
17	115-5142	10	Screw-HHF
18	145-7105	4	Screw-HHF
19	46-8091	2	Screw-HWH
20	145-7230	1	Panel-Seat, LH
21	145-7240	1	Panel-Seat, RH
22	140-9908	4	Clip-Trim
23	138-5775	2	Screw-Delta Point

Rear Facing Seat Assembly

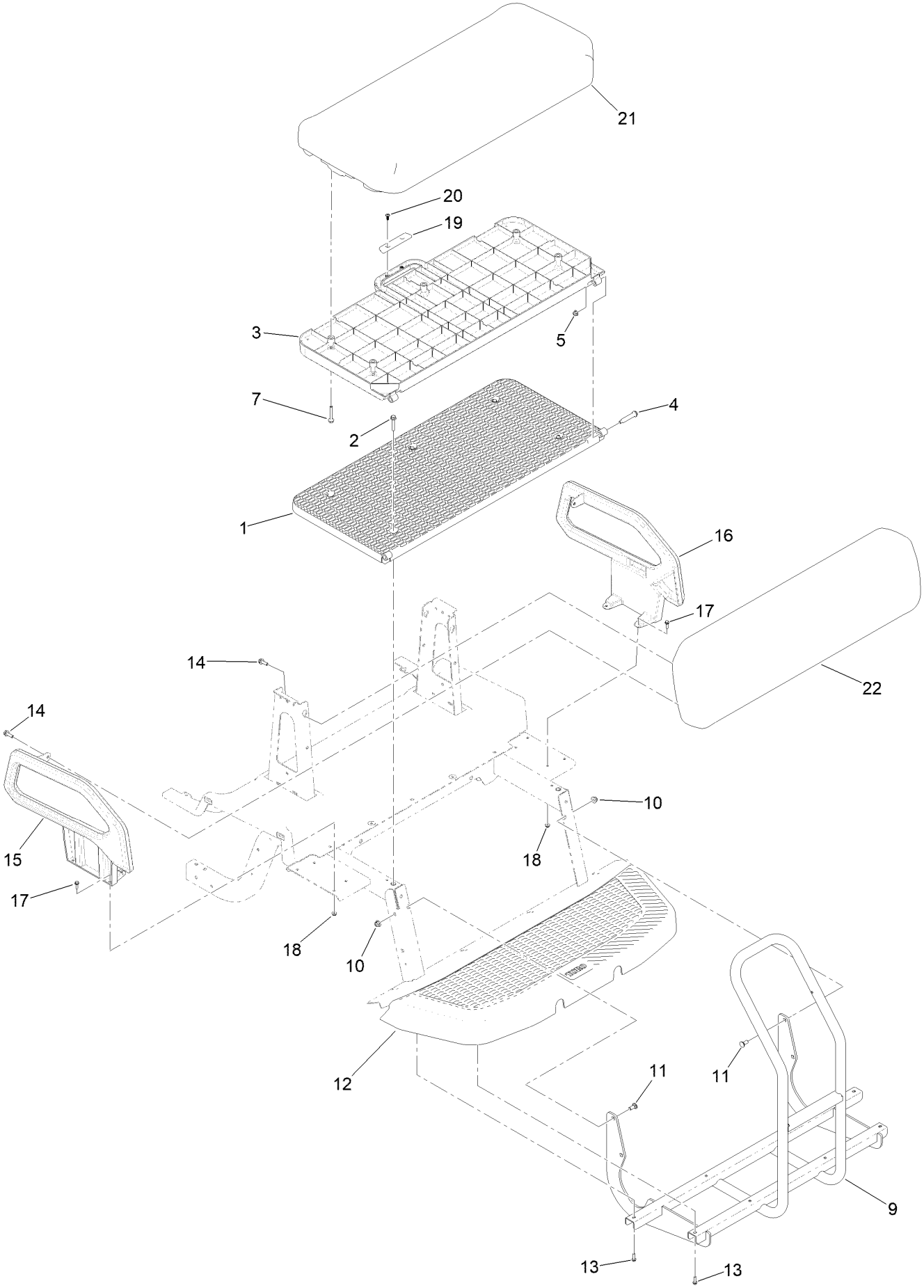

Rear Facing Seat Assembly (continued)

Ref.	Part Number	Qty.	Description
1	140-0821SP	1	Floor-Box, Cargo
2	145-7105	5	Screw-HHF
3	140-0820SP	1	Floor-Flip Seat
4	136-7199	2	Bolt-Shoulder
5	104-8300	2	Nut-HF, NI
7	140-9909	5	Screw-HHF
9	140-0875SP	1	Rear Floor Frame ASM
10	104-8301	4	Nut-HF, NI
11	3231-12	4	Bolt-CARR
12	140-0872	1	Floor-Rear
13	46-8091	8	Screw-HWH
14	115-5142	6	Screw-HHF
15	140-0833	1	Restraint-Hip, LH Rear
16	140-0834	1	Restraint-Hip, RH Rear
17	32105-15	8	Screw-HWH
18	104-7201	8	Nut-HF, NI
19	145-7100	1	Bumper-Rubber, Flip Seat
20	138-5775	2	Screw-Delta Point
21	140-9941SP	1	Seat Bottom ASM-Beige
22	140-9943SP	1	Seat Backrest ASM-Beige

Engine and Transaxle Assembly

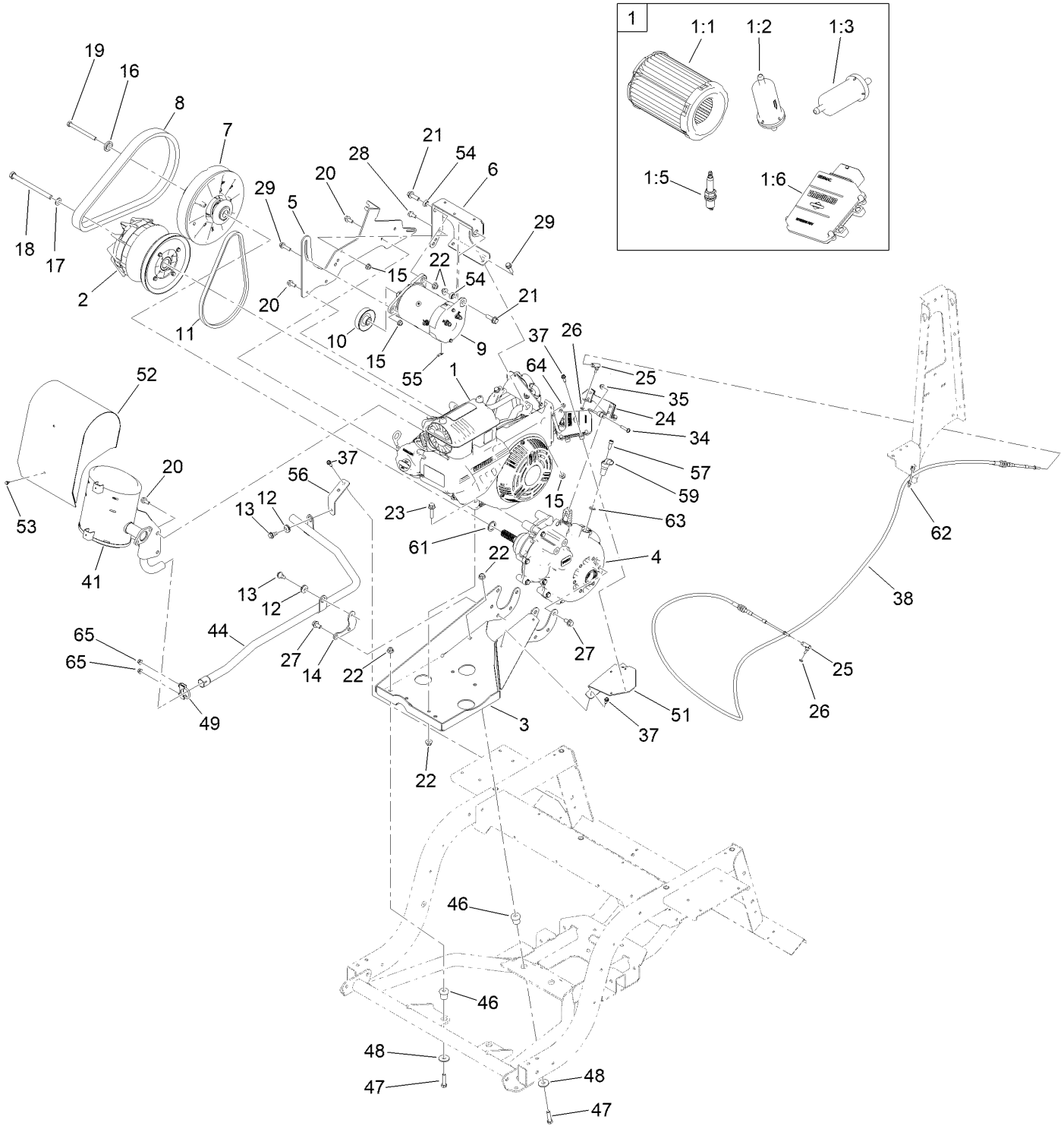

Engine and Transaxle Assembly (continued)

Ref.	Part Number	Qty.	Description
1	161-2035	1	Engine-Briggs
1:1	145-7199	1	Filter-Air, Briggs
1:2	145-7282	1	Filter-Fuel, 10 Micron
1:3	145-7283	1	Filter-Fuel, 30 Micron
1:5	147-3473	1	Spark Plug
1:6	145-7284	1	ECM-Briggs
2	147-4088	1	Primary Clutch ASM
3	140-9783-03	1	Tray-Engine ASM
4	140-9807	1	Transaxle-Gas
5	140-9777-03	1	Plate-Spanner
6	144-5490-03	1	Bracket-Starter
7	119-6011	1	Secondary Clutch ASM
8	131-8567	1	Belt-Variable
9	131-8444	1	Starter/Generator ASM
10	140-9821	1	Pulley-Drive
11	63-2951	1	V-Belt, Traction
12	1-633630	2	Grommet
13	99-5105	2	Screw-Shoulder
14	144-5496	1	Bracket-Exhaust
15	104-8300	5	Nut-HF, NI
16	104-6563	1	Washer-Stepped
17	3256-25	1	Washer-Flat
18	131-8521	1	Screw-HH
19	119-0723	1	Screw-HH, Lock
20	139-3392	9	Screw-Lock
21	119-4061	2	Screw-HHF
22	104-8301	10	Nut-HF, NI
23	114-4681	4	Screw-HHF
24	133-7260-03	1	Arm-Shift
25	2411-38	2	Joint-Ball
26	3296-27	2	Nut-Lock, NI
27	139-6300	10	Screw-Hfl
28	3234-47	2	Screw-HHF
29	3234-36	3	Screw-HHF
34	132-6777	1	Screw-Twh Thd Roll
35	104-7201	1	Nut-HF, NI
37	49-2040	8	Screw-HWHTF
38	140-9998	1	Cable-Shift
41	144-5447	1	Muffler-Briggs
44	144-5435	1	Tailpipe-Long
46	63-9750	4	Mount
47	323-8	4	Screw-HH
48	2844	4	Washer
49	144-5467	1	Clamp-Muffler
51	144-5477-03	1	Bracket-Ecu
52	144-5590	1	Muffler Shield
53	104-2065	4	Screw-HWH
54	107-0758	2	Spacer-Bearing
55	32180-535	1	Terminal-Tab
56	145-7188-03	1	Bracket-Exhaust
57	3274-10	1	Screw-HSH
59	145-7335	1	Sensor, Ground Speed
61	1-303352	1	Washer-Spindle
62	3290-378	2	Tie-Cable
63	237-142	1	Seal-O-Ring
64	33003-00	1	Nut-HF
65	32128-32	2	Nut-HHF

Primary Clutch Assembly No. 147-4088

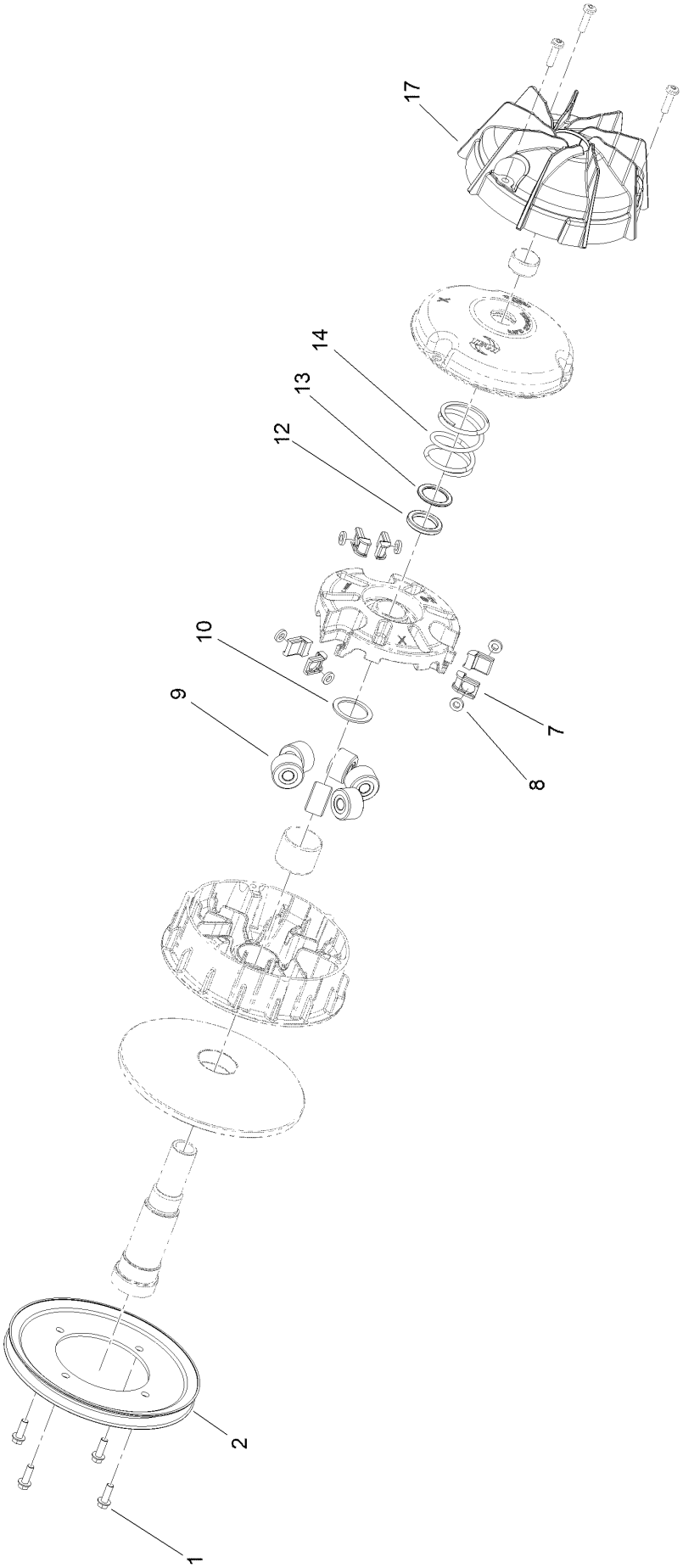

Primary Clutch Assembly No. 147-4088 (continued)

Ref.	Part Number	Qty.	Description
1	49-2040	7	Screw-HWHTF
2	119-0813	1	Pulley-Primary
7	127-8689	6	Button-Primary, Torque
8	127-8690	6	Plug-Button, Torque
9	119-0804	6	Weight-Roller
10	119-0812	1	Shim-Spider
12	119-0807	1	Shim-Limiter
13	147-3963	1	Limiter-Shift
14	119-9532	1	Spring-Red/White
17	145-7339	1	Clutch Fan ASM

Transaxle Assembly No. 140-9807

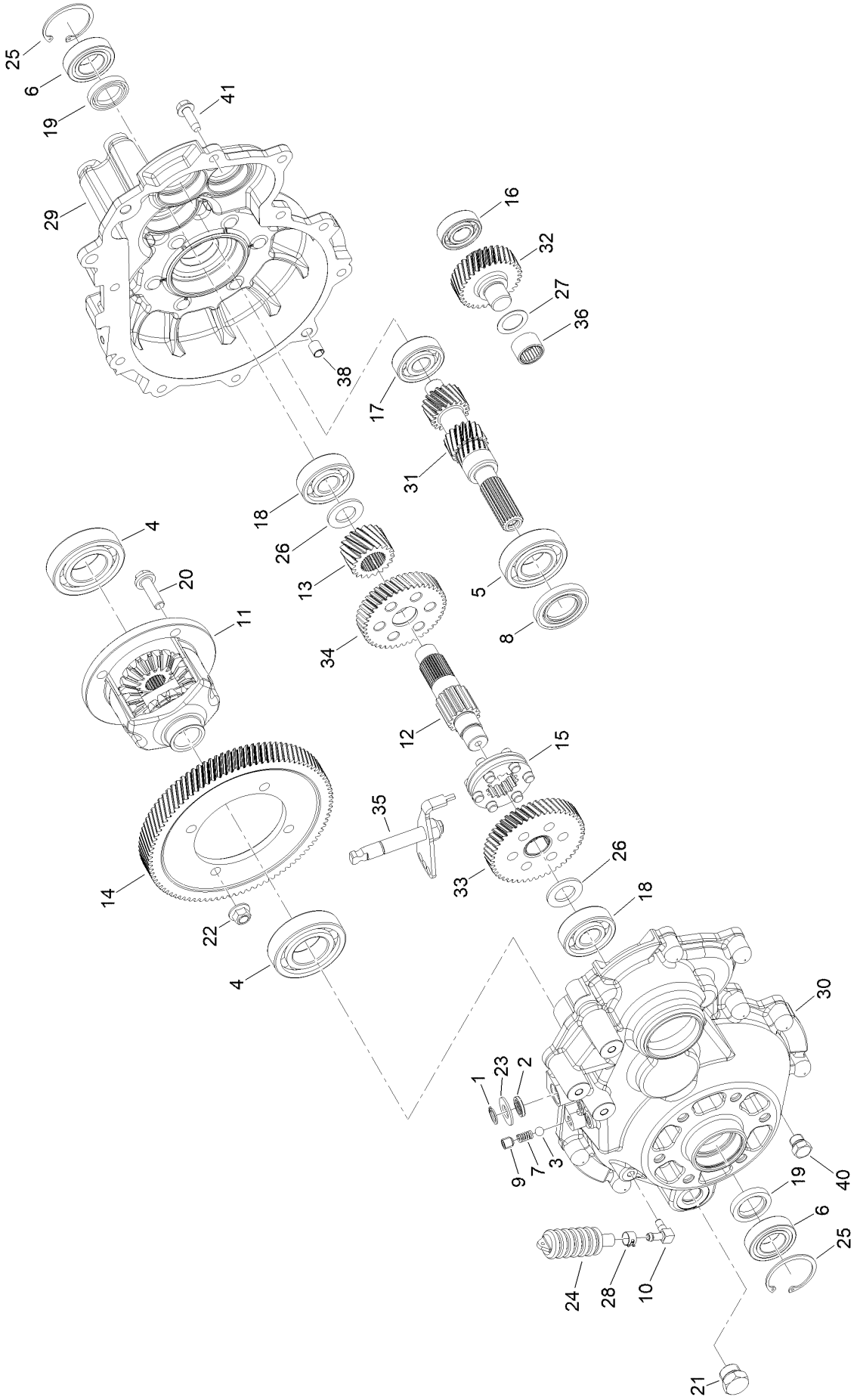

Transaxle Assembly No. 140-9807 (continued)

Ref.	Part Number	Qty.	Description
1	145-7304	1	Ring, Retaining, External, .500 Shaft
2	145-7305	1	Seal, Oil, .500 Shaft, .750 Bore
3	110-3154	1	Ball-Detent
4	145-7287	2	Bearing, Ball, Single Row, 6207
5	145-7307	1	Bearing, Ball, Single Row, 6206
6	145-7288	2	Bearing, Ball, Single Row, 6005-2Rs
7	145-7309	1	Spring, Compression, Detent
8	145-7310	1	Seal, Oil, 30 MM Shaft, 52 MM Bore
9	145-7311	1	Screw, Set, Hex Dr, Cup Pt, 3/8-16 Unc
10	147-4096	1	Tube, Vent
11	145-7290	1	Assembly, Differential Case, Standard
12	145-7313	1	Shaft, Intermediate, Finish
13	145-7314	1	Gear, Helical, Intermediate, 19T, Finish
14	145-7315	1	Gear, Helical, Output, 93T
15	145-7316	1	Clutch, Gear, Finish
16	133-2453	1	Bearing-Ball
17	133-2456	1	Bearing-Ball
18	145-7317	2	Bearing, Ball, Single Row, 6304
19	145-7289	2	Seal, Oil, .945 Shaft, 1.499 Bore
20	133-2462	4	Bolt-HHF
21	133-2466	1	Plug-HH
22	133-2463	4	Nut-Lock
23	145-7320	1	Washer, .510 X 1.061 X .073
24	145-7294	1	Vent, Bellows
25	133-2450	2	Ring-Retaining
26	145-7322	2	Spacer, Flat, .790 X 1.378 X .108
27	145-7323	1	Washer, Thrust, .805 X 1.190 X .031
28	145-7295	1	Clamp, Hose
29	145-7325	1	Housing, Left
30	145-7326	1	Housing, Right
31	145-7327	1	Shaft, Input, 16T/18T
32	145-7328	1	Gear, Helical, Idler, 31T
33	145-7329	1	ASM, Gear, Intermediate, Reverse, 47T
34	145-7330	1	ASM, Gear, Intermediate, Forward, 42T
35	145-7331	1	Assembly, Shift Shaft
36	145-7332	1	Bearing, Needle, Caged, Drawn Cup
38	145-7301	2	Bushing, Dowel, .313 X .500
40	145-7302	1	Drain Plug, Magnetic, O-Ring, 1/2-20
41	147-4095	11	Screw, Hex Head, 5/16-18, Thread Forming

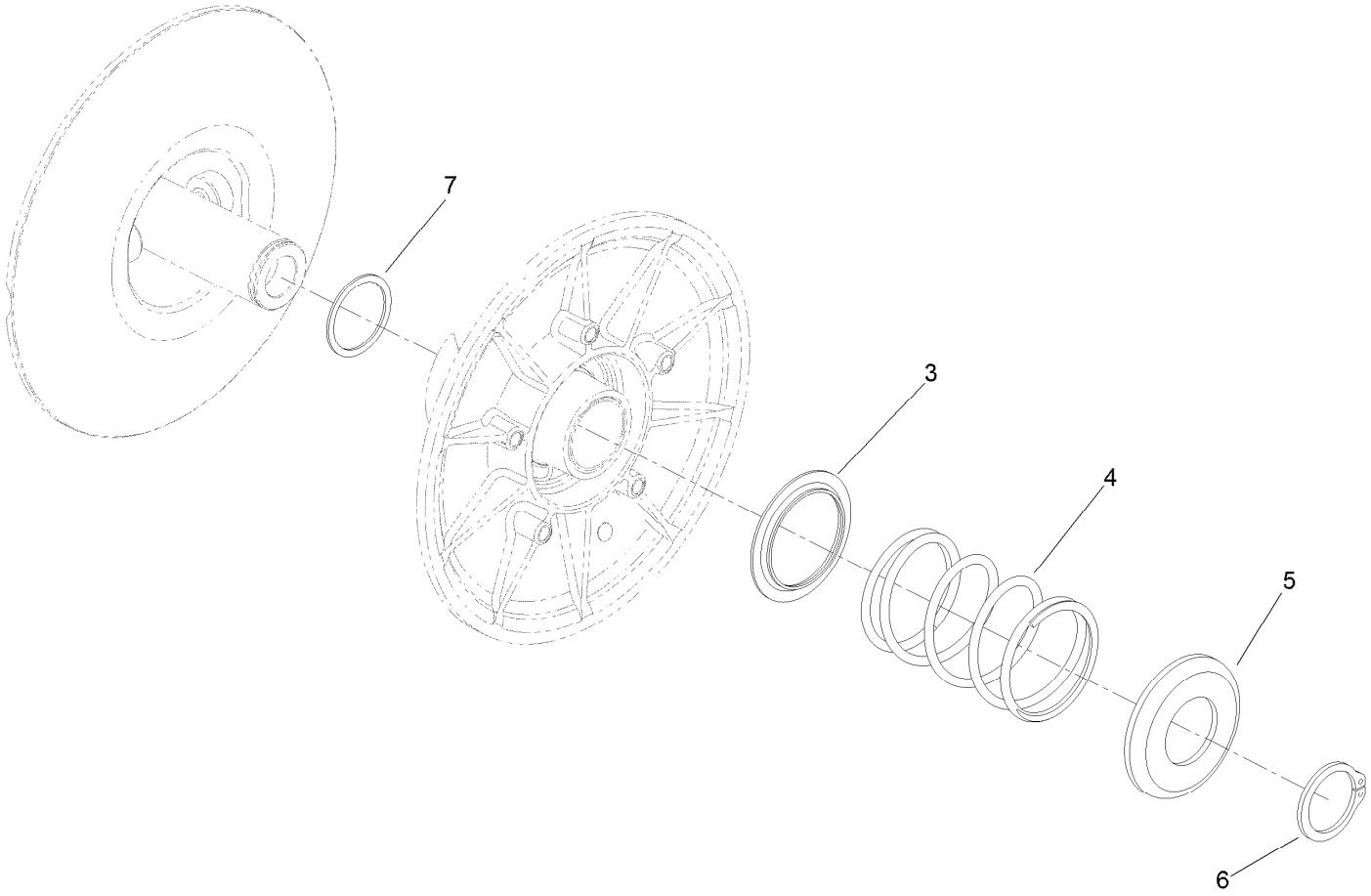

Secondary Clutch Assembly No. 119-6011

Ref.	*Part Number*	*Qty.*	*Description*
3	119-0809	1	Cup-Spring Retainer, Inner
4	119-9360	1	Spring-Compression, Black/Almond
5	119-0810	1	Cup-Spring Retainer, Outer
6	119-0811	1	Ring-Retaining
7	119-6018	1	Shim-Thrust

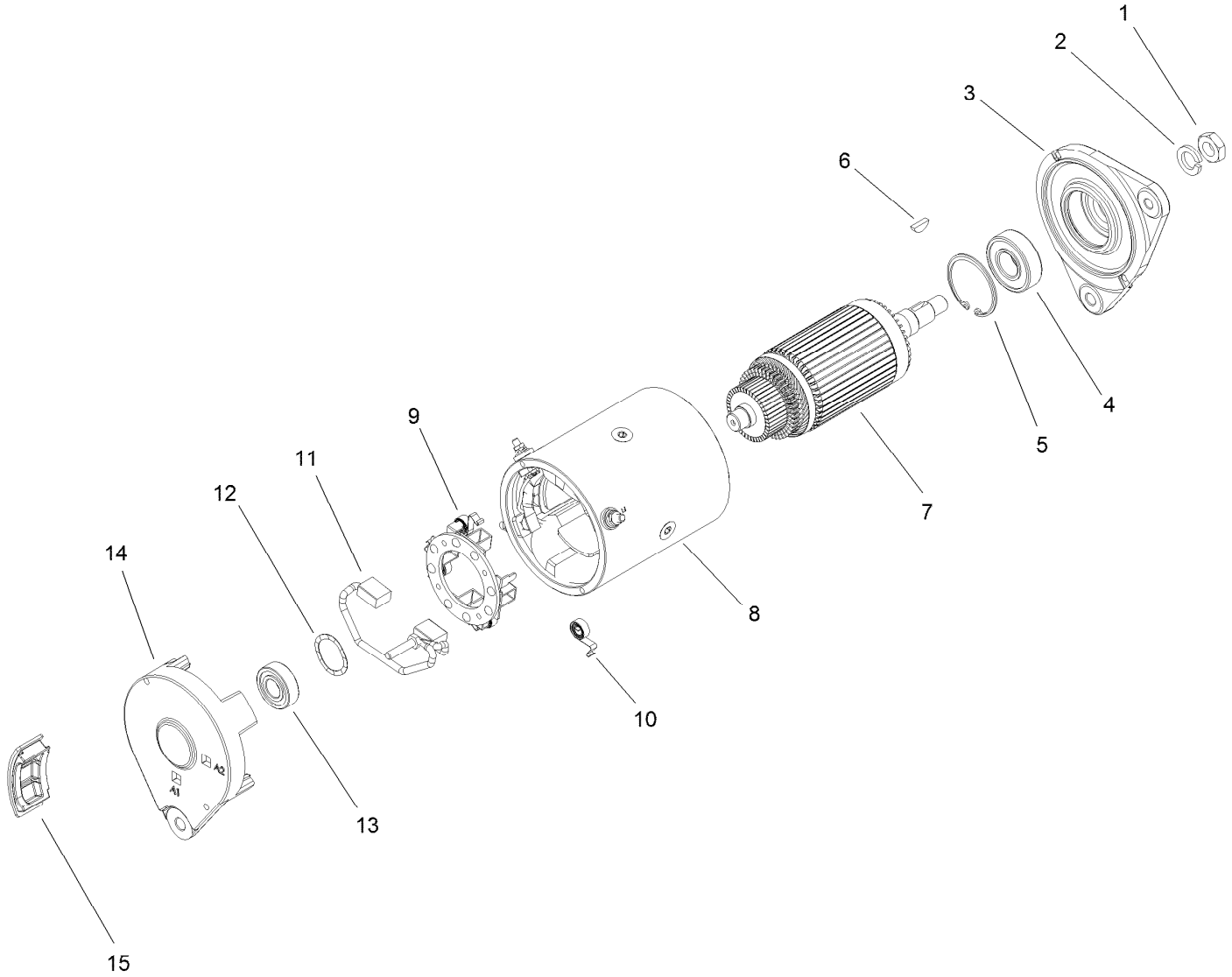

Starter Generator Assembly No. 131-8444

Ref.	Part Number	Qty.	Description
1	119-9651	1	Nut
2	119-9652	1	Washer-Lock
3	133-0599	1	Head-Drive End
4	119-9655	1	Bearing
5	119-9656	1	Ring-Retaining
6	119-9657	1	Key-Woodruff
7	119-9658	1	Armature ASM
8		1	Frame And Field Assembly ●
9	119-9661	1	Brush Box ASM
10	119-9660	4	Spring-Brush
11	119-9659	1	Brush Lead And Terminal Service Kit
12	119-9662	1	Washer-Wave
13	119-9663	1	Bearing
14		1	Head-End, Cummutator ●
15	133-0600	4	Plug-Rubber

● Not serviced separately

Battery Assembly

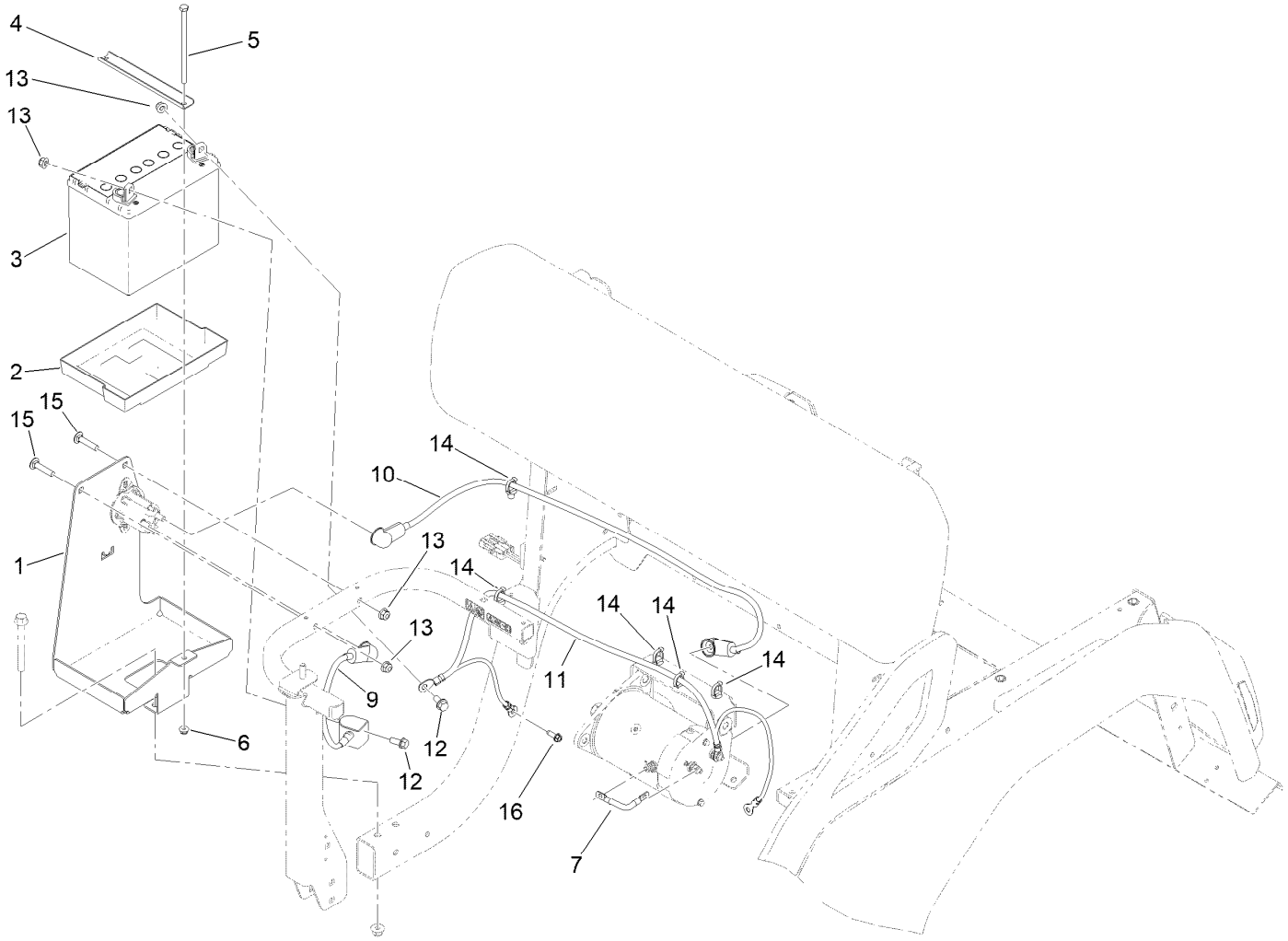

Battery Assembly (continued)

Ref.	Part Number	Qty.	Description
1	140-9869-03	1	Tray-Battery
2	106948	1	Tray-Battery
3	99-7421	1	Battery- Wet, 12V, 300 CCA
4	127-7816-03	1	Channel-Clamp, Battery
5	321-47	1	Screw-HH
6	104-7201	1	Nut-HF, NI
7	122-1176	1	Cable-Battery, Negative
9	140-9888	1	Cable-Battery, Rd ASM
10	140-9889	1	Cable-Battery, Rd ASM
11	140-9890	1	Cable-Battery, Bk ASM
12	3234-5	2	Screw-HHF
13	104-8300	4	Nut-HF, NI
14	32180-030	5	Clip-Tie
15	3230-4	2	Bolt-CARR
16	49-2040	1	Screw-HWHTF

Electrical Assembly

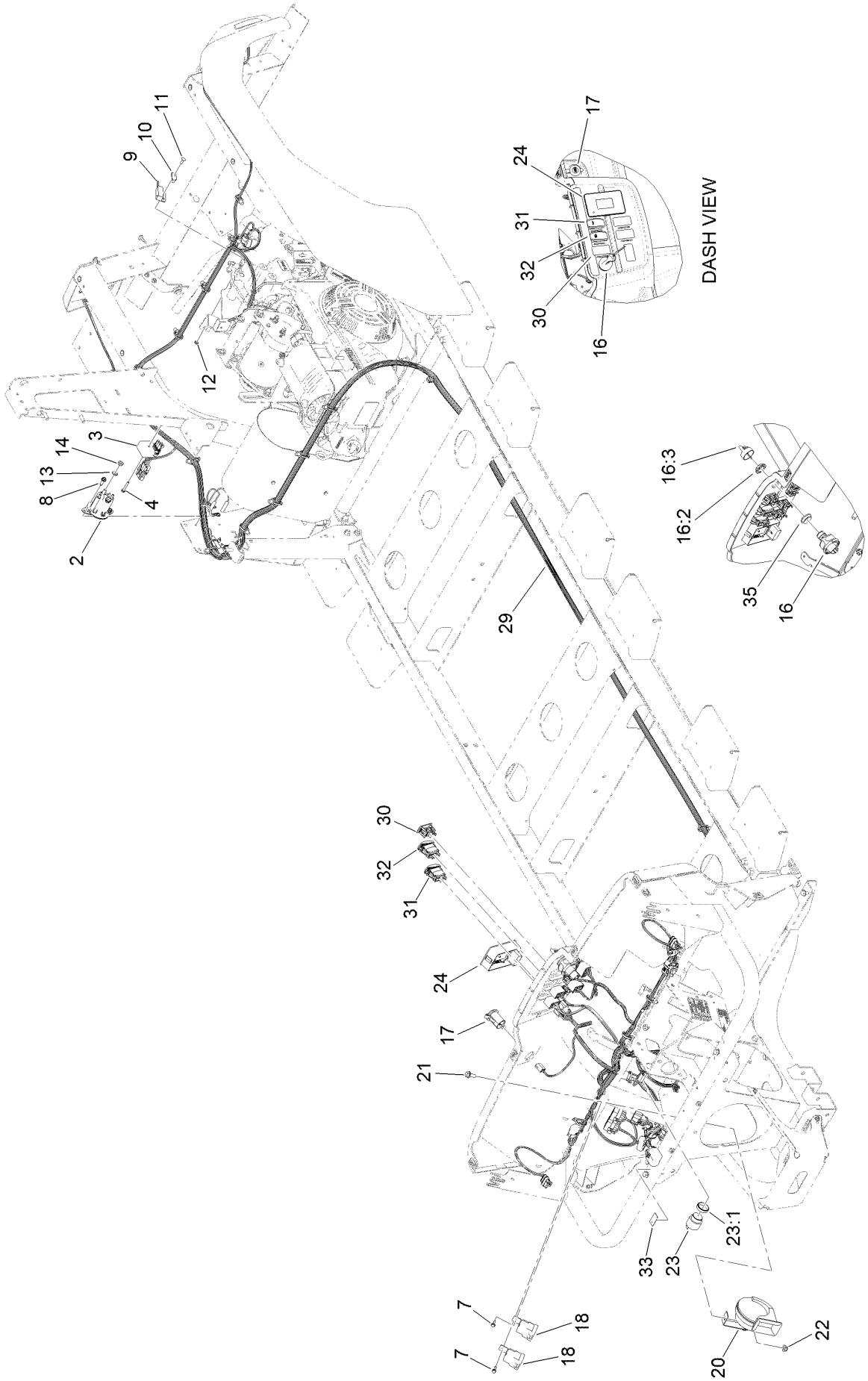

Electrical Assembly (continued)

Ref.	Part Number	Qty.	Description
2	114-3315	1	Solenoid
3	119-9492	1	Regulator-Voltage
4	100-4352	1	Screw-HWH
7	100-4351	2	Screw-HWH
8	49-2040	2	Screw-HWHTF
9	100-1270	1	Switch-Proximity
10	100-4872	1	Plate-Switch, Neutral
11	3229-34	1	Screw-CARR
12	138-0719	1	Nut-HF
13	3255-8	2	Washer-Lock
14	3220-2	2	Nut-Jam
16	122-2513	1	Switch-Ignition, Suns
16:1	121-5160	1	Nut-Hex ●
16:2	122-2704	1	Nut-Face, M22 (Plastic)
16:3	121-5162	1	Set-Key, Ignition
17	140-7955	1	Port-Power, USB

Ref.	Part Number	Qty.	Description
18	99-7430	2	Relay-Mini
20	110-2594	1	Horn
21	3234-5	1	Screw-HHF
22	104-8300	1	Nut-HF, NI
23	80-9330	1	Audio Alarm ASM
23:1	104-5107	1	Nut-Plastic, Knurled
24	122-2152	1	Controller, Tdm-1601
29	122-2217	1	Harness-Wire, Vista, B&s (6&8 Pass)
30	119-7791	4	Plug-Hole
31	144-2415	1	Switch-Rocker, (On)-None-Off
32	144-2405	1	Switch-Rocker, On-None-On
33	144-5575	1	Decal-Fuse Block EFI
35	145-7110	1	Adapter-Switch, Key

● Not illustrated

Wire Harness Assembly No. 122-2217

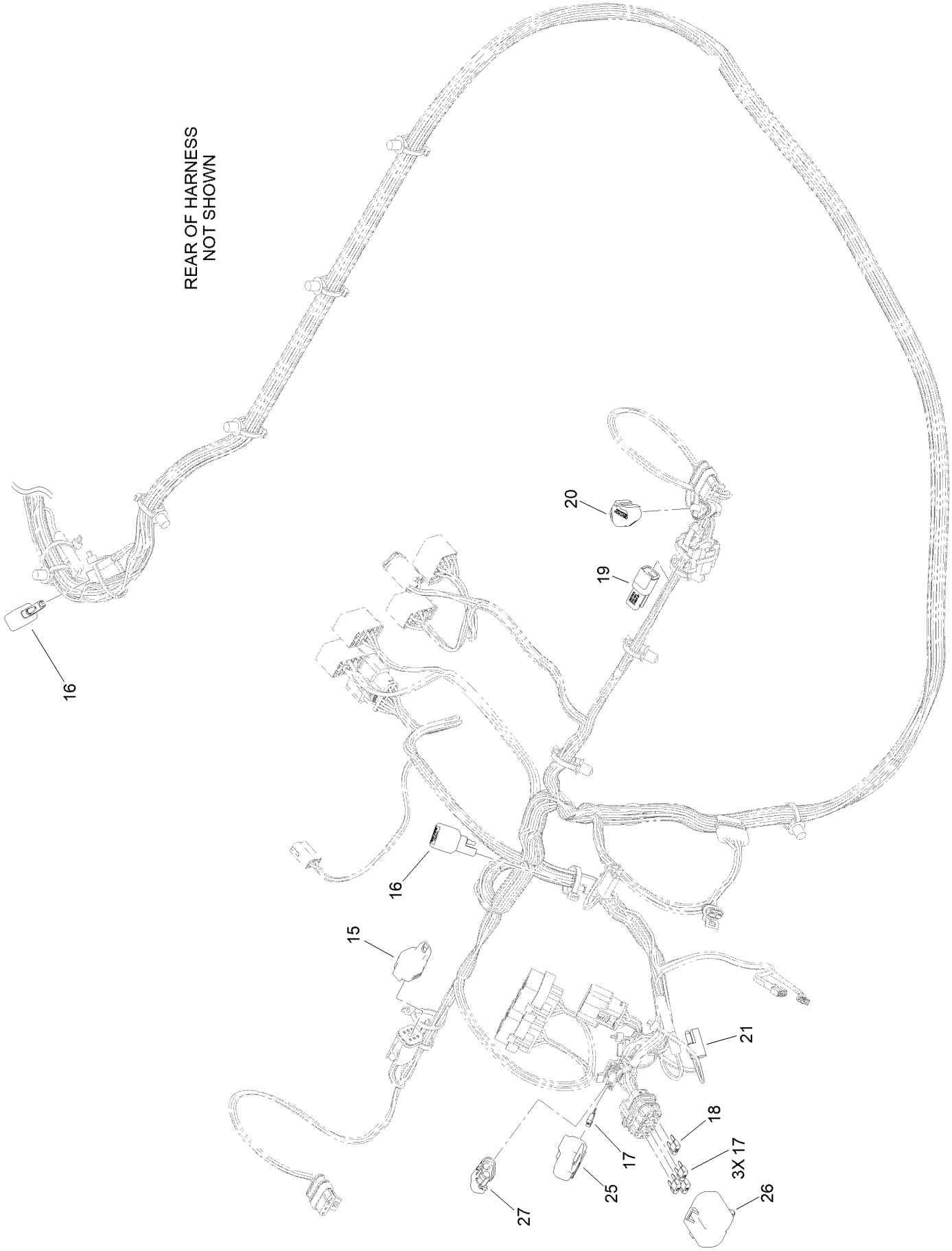

Wire Harness Assembly No. 122-2217 (continued)

Ref.	Part Number	Qty.	Description
15	32180-156	1	Cap-Plug, 6 Way
16	100-4918	2	Diode
17	121-8866	4	Fuse-Mini Blade, 10 Amp
18	121-8868	2	Fuse-Mini Blade, 20 Amp
19	32180-282	1	Resistor-120 Ohm
20	32180-089	1	Cap-Plug, 3 Way
21	32180-416	1	Cap-Tethered
25	32180-101	1	Cover-Fuse, Single
26	32180-181	1	Cover-Cooper-Bussman, Atm ST Pin Brkt
27	32160-072	1	Connector-Wp,2M

Fuel System Assembly

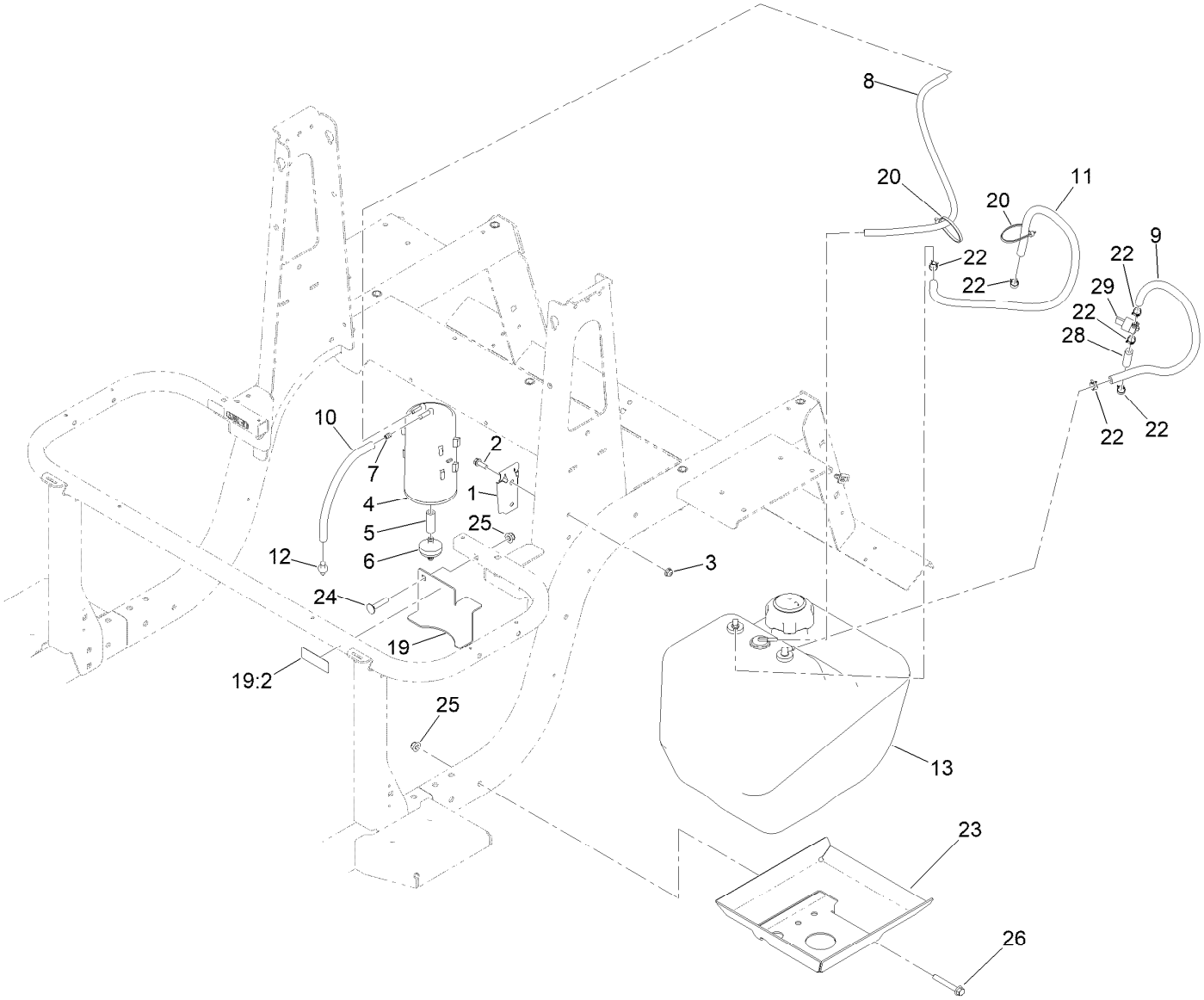

Fuel System Assembly (continued)

Ref.	Part Number	Qty.	Description
1	114-0292	1	Bracket-Canister, Carbon
2	32105-15	2	Screw-HWH
3	104-7201	2	Nut-HF, NI
4	127-8685	1	Canister-Carbon
5	106-5317	1	Hose-Fuel
6	115-7854	1	Filter-Fuel, Inline
7	120-2038	1	Cartridge-Valve, Check
8	119-8149	1	Hose-Fuel
9	110-5701	1	Hose-Fuel
10	109-0282	1	Hose-Fuel
11	109-1395	1	Hose-Fuel
12	117-5399	1	Adaptor-Orifice

Ref.	Part Number	Qty.	Description
13	144-5395	1	Fuel Tank ASM
19	145-7058	1	Tank Bracket ASM
19:2	131-8410	1	Decal-Danger, Fuel
20	3290-378	2	Tie-Cable
22	2412-98	6	Clamp-Hose
23	144-5355-03	1	Tank Support ASM
24	3230-4	1	Bolt-CARR
25	104-8300	2	Nut-HF, NI
26	139-4479	1	Screw-HHF
28	109-0304	1	Hose-Fuel
29	1-603770	1	Valve-Fuel

Fuel Tank Assembly No. 144-5395

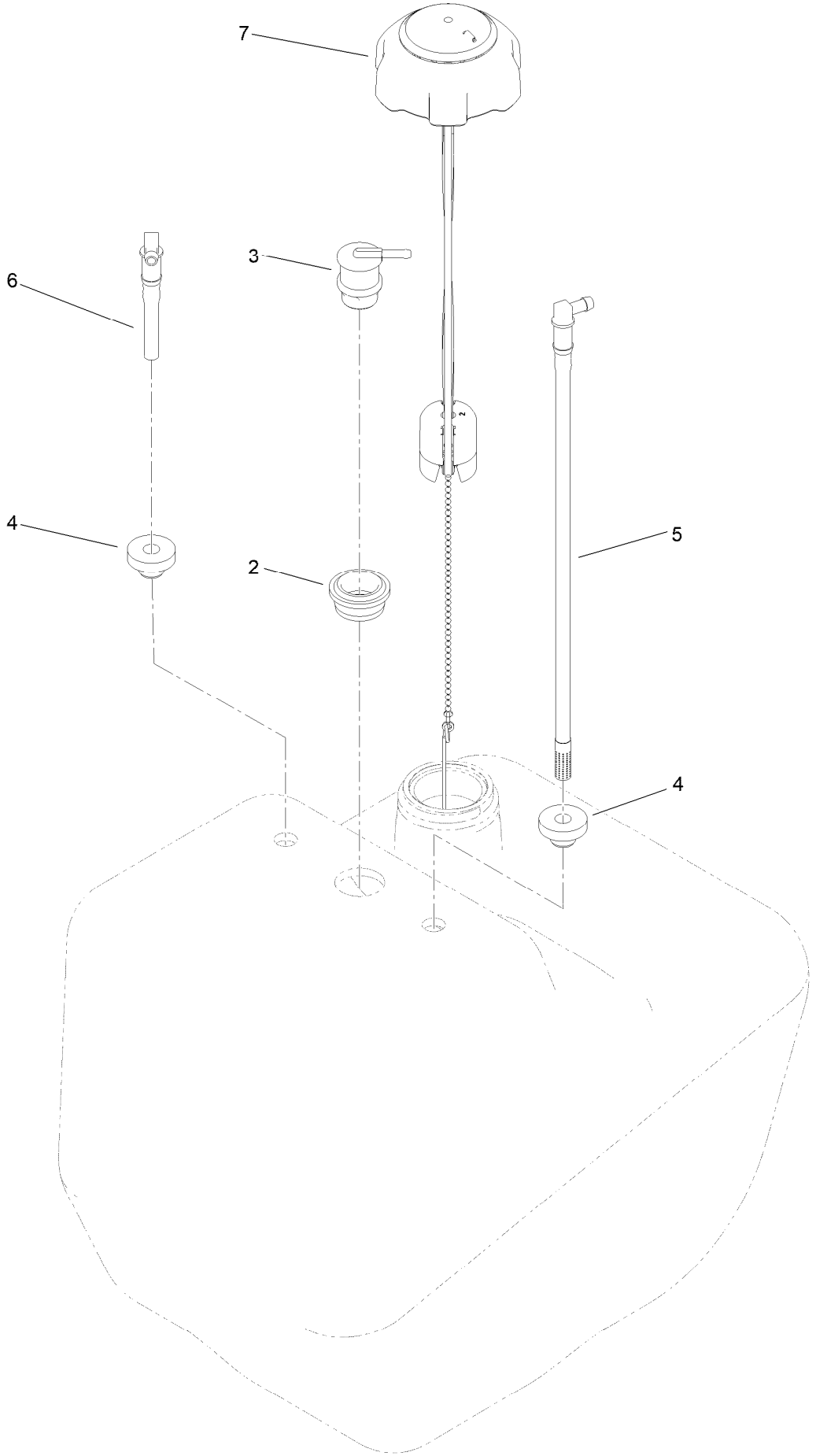

Fuel Tank Assembly No. 144-5395 (continued)

Ref.	Part Number	Qty.	Description
2	114-0284	1	Grommet
3	114-0285	1	Valve-Rollover
4	46-6560	2	Bushing
5	115-9044	1	Pipe-Stand
6	145-7285	1	Fitting-Return, Fuel
7	131-8357	1	Cap-Gauge

Attachments and Accessories

For 08916 Vista 6 Passenger EFI Shuttle Vehicle

Product Name	Model/Part
Rear View Mirror Kit	08141
Folding Windshield Kit	08220
Beige Canopy, Vista 6 Passenger Shuttle Vehicle	08221
Beacon Kit	08225
Shim-Limiter	119-0807
Wide Angle Mirror Kit	133-1009
Wide Angle Mirror Kit	133-1038
Universal Wireless Hourmeter Kit	144-2436
Turn Signal Kit	144-5587
Side Mirrors Kit	145-7140

Notes:

Notes:

Notes:

TORO®

Count on it.