Form No. 3467-885 Rev A

Power Expansion Kit

Workman® GTX Lithium Utility Vehicle

Model No. 147-8220

Installation Instructions

Safety

Refer to the *Operator's Manual* for the machine for battery safety information specific to your machine.

Installation

Loose Parts

Use the chart below to verify that all parts have been shipped.

Procedure	Description	Qty.	Use
1	No parts required	–	Prepare the machine.
2	No parts required	–	Remove the battery compartment panels.
3	No parts required	–	Remove the bus bars and wire harness.
4	Wire harness Bus bar Screw (1/4 inch)	1 2 2	Install the Power Expansion Kit.
5	No parts required	–	Install the battery compartment panels.
6	No parts required	–	Connect the battery.

© 2024—The Toro® Company
8111 Lyndale Avenue South
Bloomington, MN 55420

Register at www.Toro.com.

Original Instructions (EN)
Printed in the USA
All Rights Reserved

3467-885

1

Preparing the Machine

No Parts Required

Procedure

1. Park the machine on a level surface.
2. Engage the parking brake.
3. Shut off the machine and remove the key.
4. Wait for all moving parts to stop.
5. Flip up or remove the seat assembly; refer to the machine *Operator's Manual*.
6. Move the battery-disconnect switch to the OFF position.

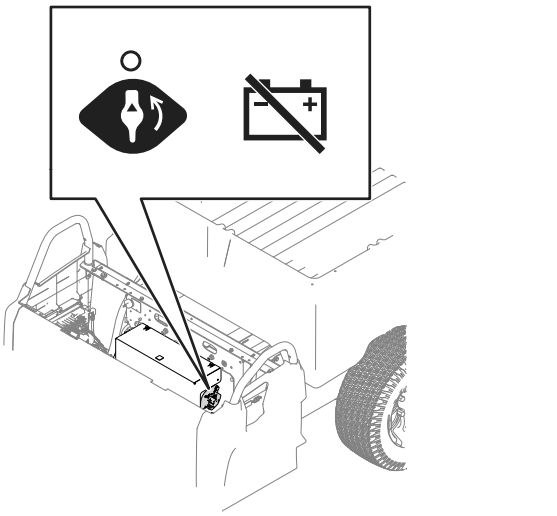

g435639

Figure 1

7. Wear protective clothing and use insulated tools. Disconnect the battery before repairing the machine. Disconnect the negative terminal first and the positive last.
8. Empty the cargo bed.

⚠ WARNING

Raise the cargo bed before performing maintenance. A raised cargo bed can fall and injure persons that are underneath it.

- **Always use the prop rod to hold the cargo bed up before working underneath it.**
- **Remove any load material from the cargo bed before working underneath it.**

9. Raise the cargo bed and secure it with the prop rod; refer to the machine *Operator's Manual*.

2

Removing the Battery Compartment Panels

No Parts Required

Procedure

1. Remove the 2 screws (3/8 inch) securing the top panel to the battery compartment.

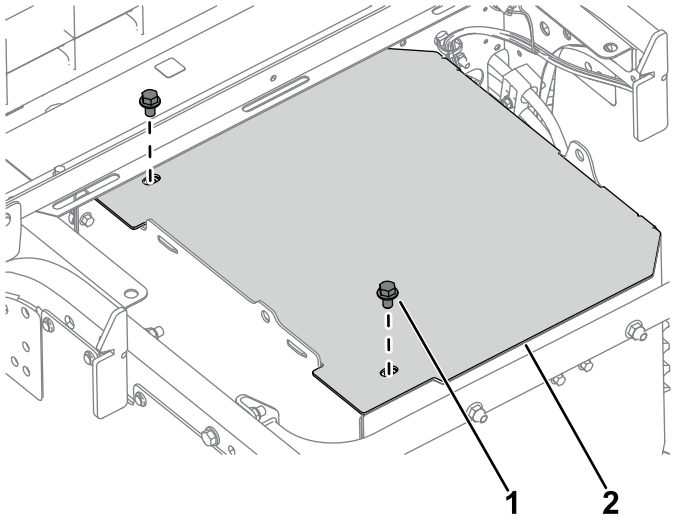

g435852

Figure 2

1. Screw (3/8 inch)
2. Top panel

2. Remove the 6 bolts (1/4 inch) and 6 nuts (1/4 inch) securing the left side panel to the battery compartment.

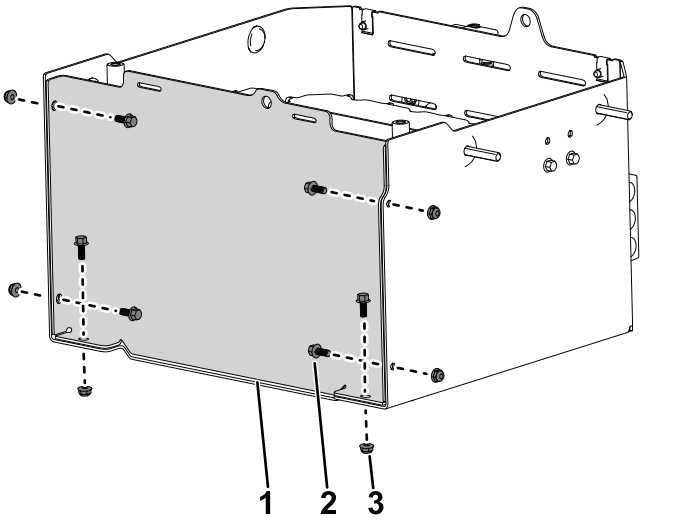

Figure 3

1. Left side panel
2. Bolt (1/4 inch)
3. Nut (1/4 inch)

3. Remove and discard the 2 bolts (1/4 inch) and 2 nuts (1/4 inch) that secure the hold down bracket to the side panel. Discard the bracket.

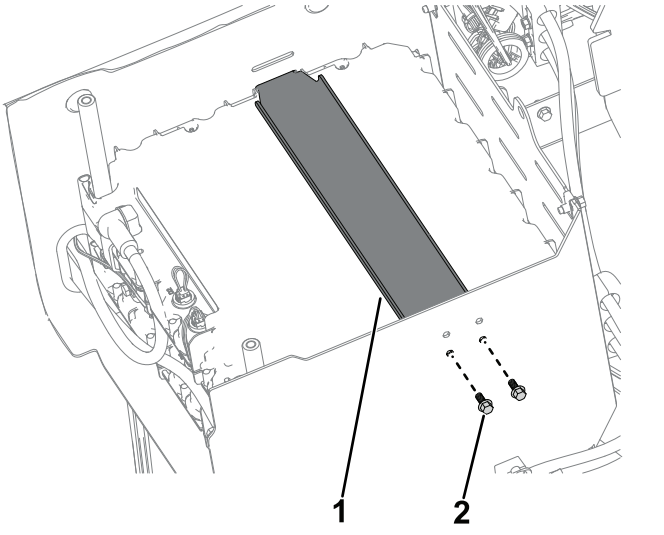

Figure 4

1. Hold down bracket
2. Bolt (1/4 inch)

3

Removing the Bus Bars and Wire Harness

No Parts Required

Procedure

1. Remove the screw (1/4 inch) that secures the negative battery cable and bus bar to the top battery post. Repeat on the positive battery cable.

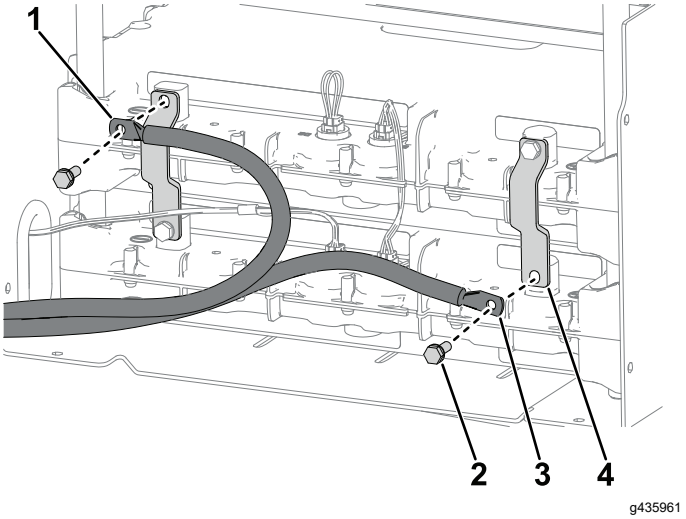

Figure 5

1. Negative battery cable
2. Screw (1/4)
3. Positive battery cable
4. Bus bar

2. Remove the 2 screws (1/4 inch) and 2 bus bars from the batteries.

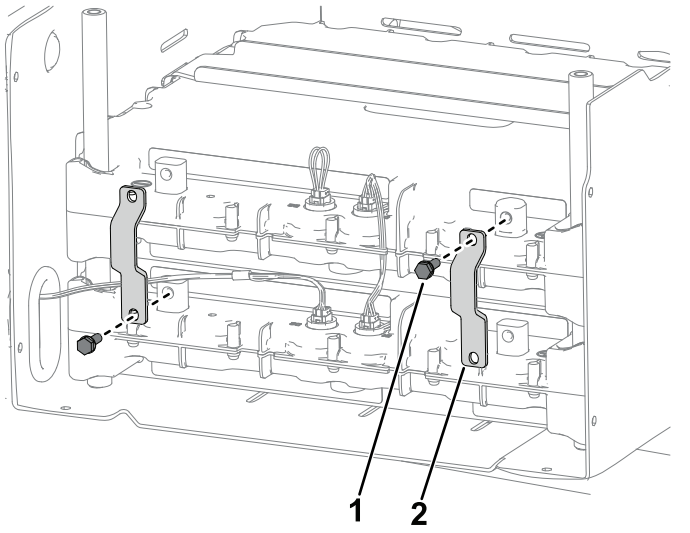

Figure 6

1. Screw (1/4 inch)
2. Bus bar

3. Remove the wire harness from the top battery.

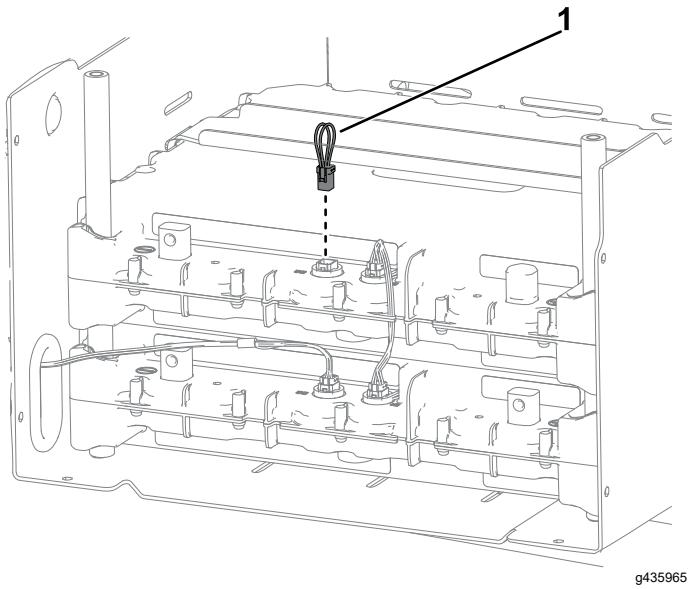

Figure 7

1. Wire harness

4

Installing the Power Expansion Kit

Parts needed for this procedure:

1	Wire harness
2	Bus bar
2	Screw (1/4 inch)

Procedure

1. Place the new battery on top of the existing battery.
2. Using the new wire harness, connect battery 2 to battery 3. Install the previously removed wire harness.

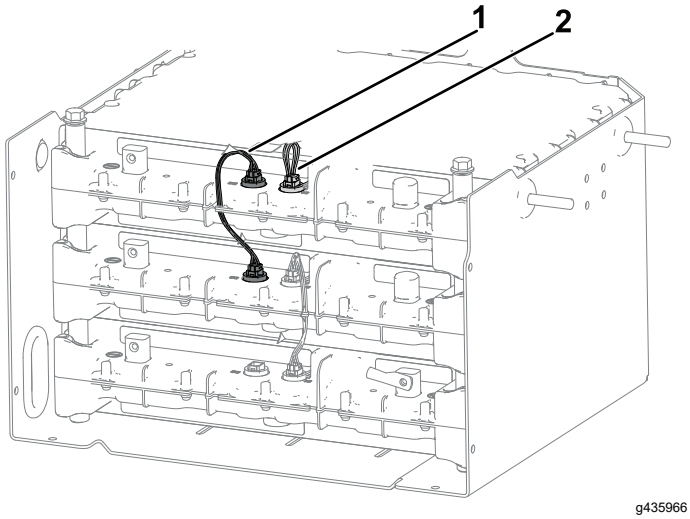

Figure 8

1. Wire harness (new)
2. Wire harness (retained)

3. Loosely install the new screw (1/4 inch) and bus bar to the top right battery post.

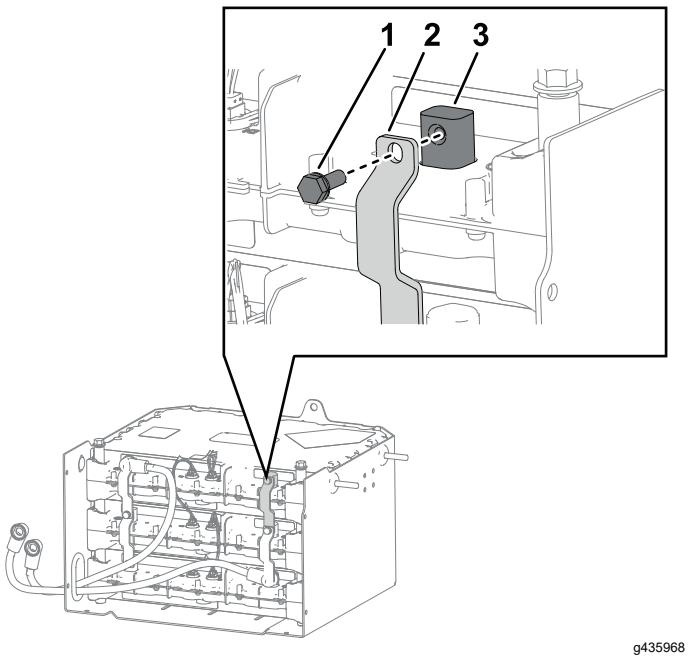

Figure 9

1. Screw (1/4 inch)
2. Bus bar
3. Battery post

4. Loosely install the screw (1/4 inch) that secures the positive battery cable and bus bar to the bottom right battery post.

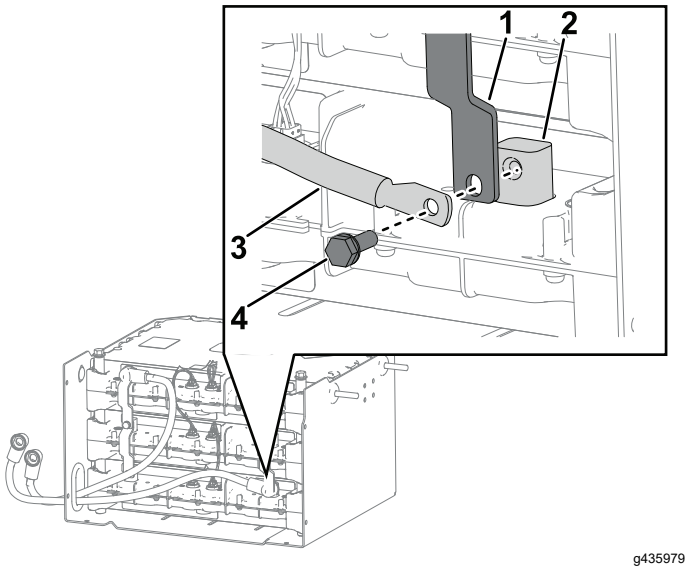

Figure 10

1. Bus bar
2. Battery post
3. Positive battery cable
4. Screw (1/4 inch)

5. Loosely install the screw (1/4 inch) that secures the new and retained bus bars to the middle battery post.

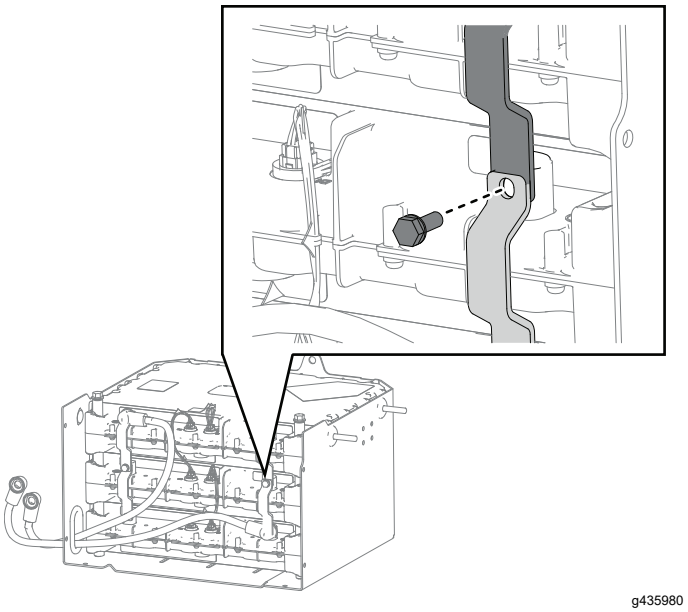

Figure 11

6. Verify the bus bars seated properly and torque the screws (1/4 inch) installed in steps 3 through 5 to 10.7 N·m (95 in-lb).
7. Loosely install the screw (1/4 inch) and bus bar to the bottom left battery post.

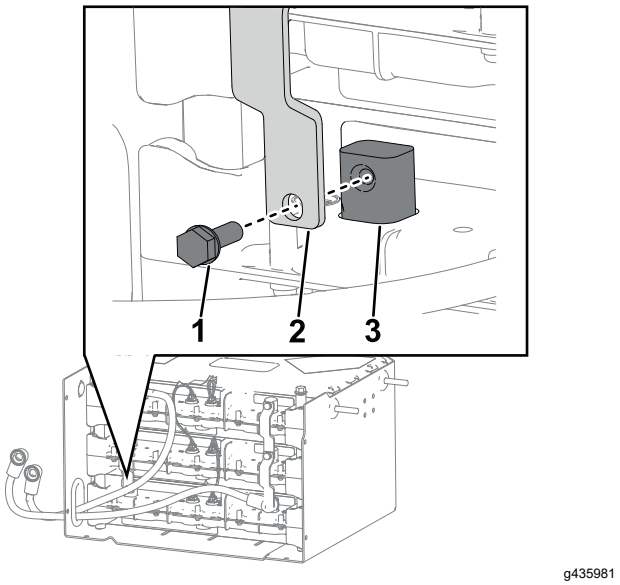

Figure 12

1. Screw (1/4 inch)
2. Bus bar
3. Battery post

8. Loosely install the new screw (1/4 inch) that secures the negative battery cable and new bus bar to the top battery post.

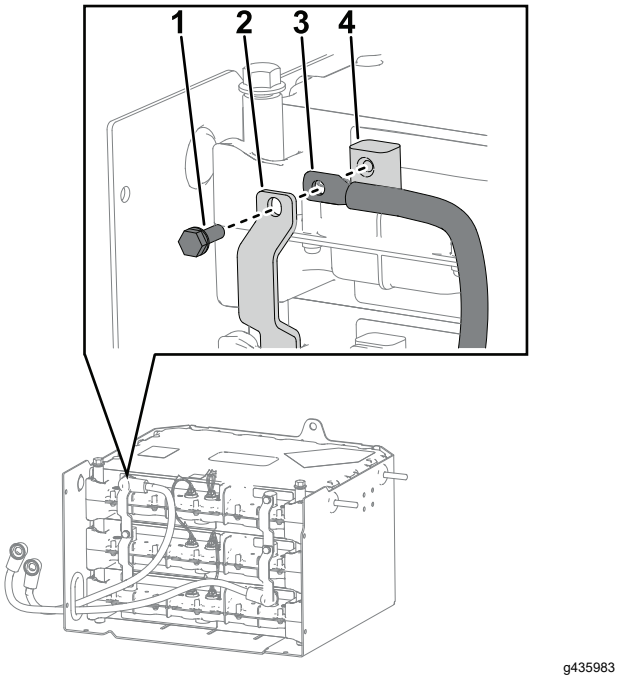

g435983

Figure 13

1. Screw (1/4 inch)
2. Bus bar
3. Negative battery cable
4. Battery post

9. Loosely install the screws that secures the new and retained bus bars to the middle battery post.

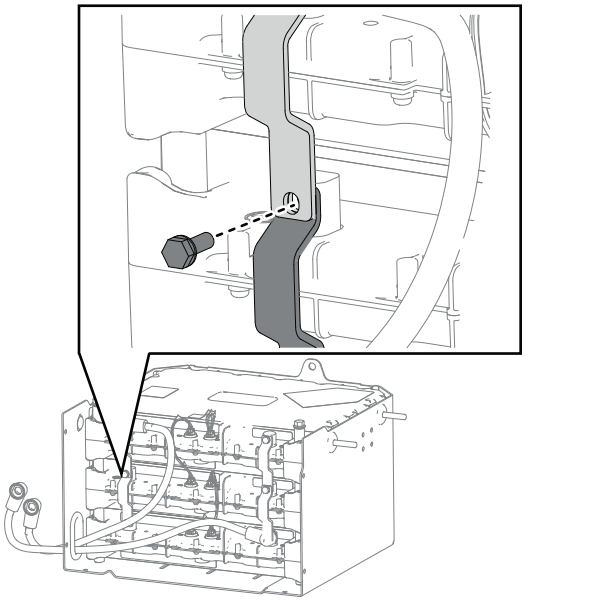

g435984

Figure 14

10. Verify that the bus bars seated properly and torque the screws (1/4 inch) installed in steps 7 through 9 to 10.7 N·m (95 in-lb).

5

Installing the Battery Compartment Panels

No Parts Required

Procedure

1. Install the left side panel to the battery compartment and secure with the 6 bolts (1/4 inch) and 6 nuts (1/4 inch).

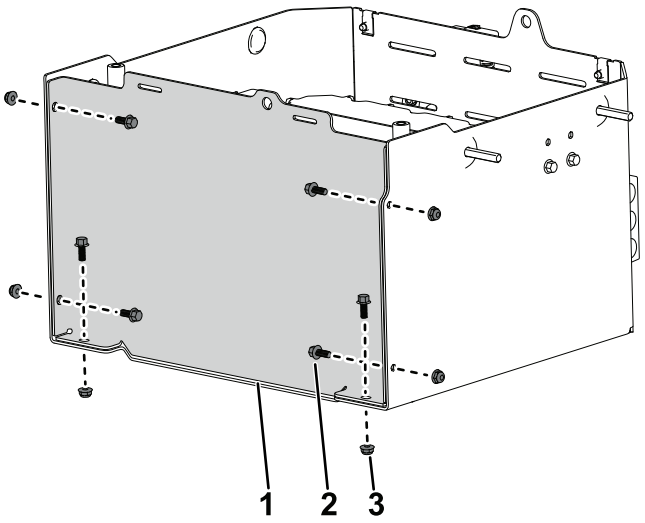

g435936

Figure 15

1. Left side panel
2. Bolt (1/4 inch)
3. Nut (1/4 inch)

2. Install the top panel to the battery compartment and secure with the 2 screws (3/8 inch).

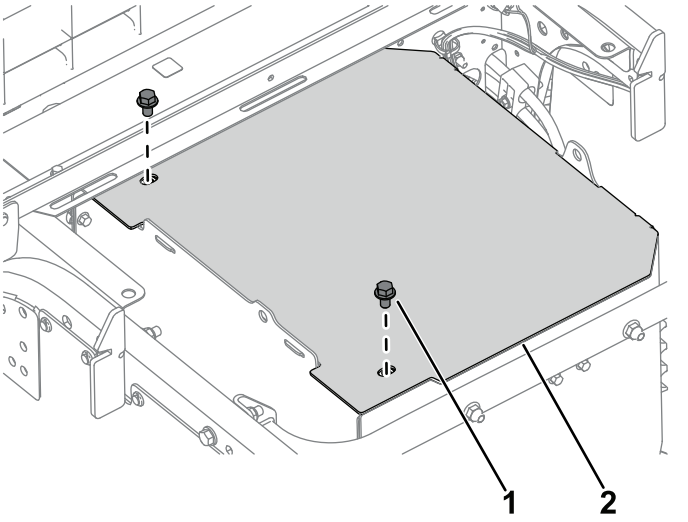

Figure 16

1. Screw (3/8 inch)
2. Top panel

⚠ WARNING

The weight of the bed may be heavy. Hands or other body parts could be crushed.

Keep your hands and other body parts away when lowering the bed.

3. Lower the cargo bed; refer to the machine *Operator's Manual*.
4. Connect the positive battery cable and then the negative battery cable to the battery.
5. Move the battery-disconnect switch to the ON position.

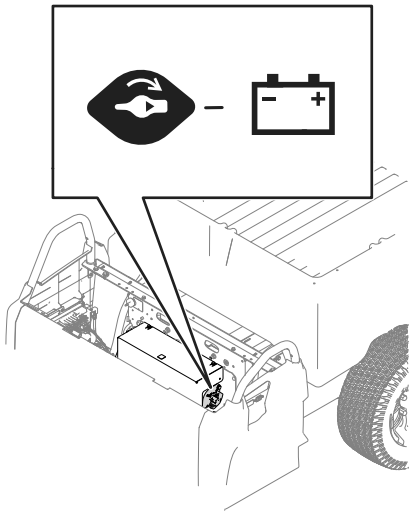

Figure 17

6. Lower or install the seat assembly; refer to the machine *Operator's Manual*.

6

Connecting the Battery

No Parts Required

1. Turn the battery-disconnect switch to the ON position and lower the bench seat; refer to the machine *Operator's Manual*.
2. Rotate the key switch to the ON position; there should be no faults shown on the display.

   Note: If Fault U1311 displays, the battery software version does not match the machine software version. Contact your authorized Toro distributor to get your machine programmed for the newly installed battery.

   If Fault U1151 displays, the battery that was just installed is outside the range of the original 2 packs that are on the machine. The machine must be charged to have them in the same range.

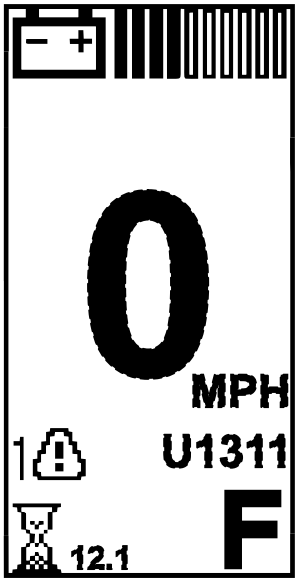

Figure 18

3. Charge the machine.

   Note: The machine must be charged after installing the battery.



Count on it.