Form No. 3465-515 Rev B

TORO®

Count on it.

Parts Catalog

Workman® MDX

Utility Vehicle

Model No. 07235—Serial No. 415300000 and Up

Register at www.Toro.com.
Original Instructions (EN)

3465-515 B

Ordering Replacement Parts

To order replacement parts, please supply the part number, the quantity, and the description of each part desired.

Understanding Reference Numbers

Each identified part in an illustration has a reference number. The reference number for a part also appears in the parts list, along with other information about the part.

This catalog uses two special reference number formats, one to indicate parts in a service assembly and another to indicate the quantity of a given part in an illustration.

Service Assembly Reference Numbers

Parts in service assemblies have reference numbers in the form a:b. The a represents the reference number of the entire service assembly and the b represents a sequential number unique to each part within the service assembly.

For example, a wheel assembly might be identified by reference number 6, the tire by 6:1, the valve by 6:2, and the wheel by 6:3. When you order the assembly identified by reference number 6, you receive all parts identified by reference numbers 6:1,6:2, and 6:3. However, you may also order any part individually. Reference numbers of this type appear in illustration and in parts lists.

Reference Numbers Indicating Quantity

In an illustration, if a reference number indicates more than one part, the reference number has the form nX y. The n represents the quantity of the part, the X is the multiplication symbol, and the y represents the reference number.

For example, in an illustration, the reference number 2X 37 means that two of the parts identified by reference number 37 are indicated.

Contents

Front Frame and Suspension Assembly 4
Rear Frame and Suspension Assembly 6
Front Brake Assembly 7
Master Cylinder Assembly No. 104-6782 8
Brake Caliper Assembly No. 127-7424 9
Rear Brake Assembly 10
RH Rear Brake Assembly No. 114-8331 11
LH Rear Brake Assembly No. 114-8332 12
Steering Assembly 13
Pedal Assembly 14
Shifter Assembly 15
Hood and Fender Assembly 16
Dash Assembly 17
Control Panel Assembly 18
Seatbase Assembly 19
Cargo Bed Assembly 20
Cargo Bed Service Assembly No. 147-4026 22
Engine, Clutch and Air Cleaner Assembly 24
Primary Clutch Assembly No. 138-0094 26
Air Cleaner Assembly No. 99-7120 27
Rear Axle Drive System Assembly 28
Battery Assembly 29
Transaxle Assembly No. 119-0760 30
Secondary Clutch Assembly No. 136-6289 32
Electrical Assembly 33
Starter Generator Assembly No. 131-8444 34
Fuel Tank Assembly 35
Attachments and Accessories 36

© 2024—The Toro® Company
8111 Lyndale Avenue South
Bloomington, MN 55420

Contact us at www.Toro.com.
Printed in the USA.
All Rights Reserved

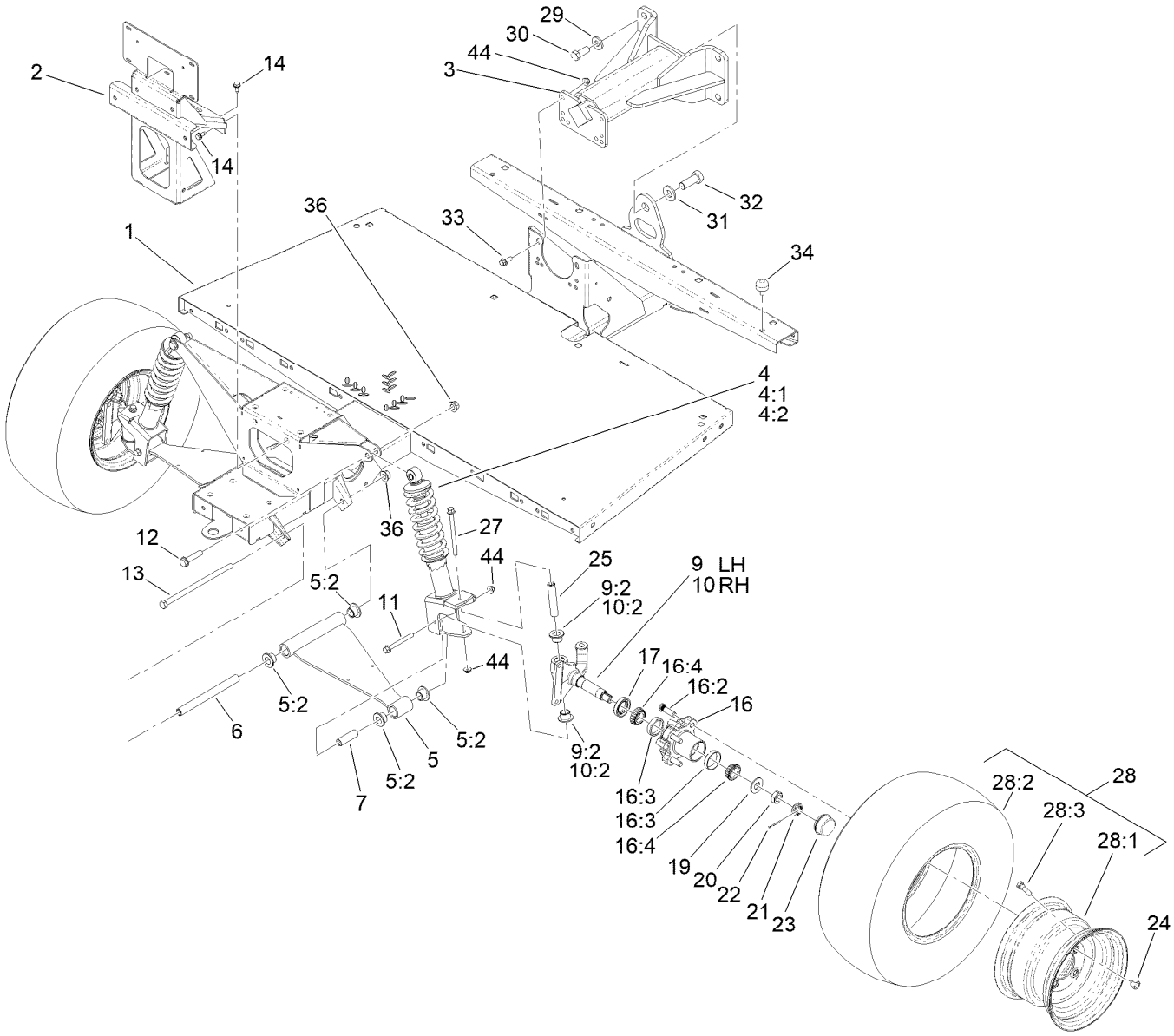

Front Frame and Suspension Assembly

Ref.	Part Number	Qty.	Description
1	147-3841-03	1	Front Frame ASM [black]
2	132-6736-03	1	Support-Bumper
3	99-7700	1	Yoke-Pivot
4	132-6791	2	Strut ASM
4:1	133-0556	1	Spring-Coil
4:2	131-8574	1	Isolator-Shock
5	144-2160	2	Control Arm ASM
5:2	140-4615	4	Bushing-Flange
6	133-0595	2	Sleeve-Control Arm, Inner
7	131-8583	2	Sleeve-Control Arm, Outer
9	144-5468	1	Spindle ASM LH
9:2	140-4615	2	Bushing-Flange
10	144-5469	1	Spindle ASM RH
10:2	140-4615	2	Bushing-Flange
11	139-3370	2	Screw-HF
12	3234-46	2	Screw-HHF
13	325-39	2	Screw-HH
14	32144-70	6	Screw-HWHTF
16	144-5470	2	Front Hub ASM
16:2	10-6830	4	Stud-Type, Drive
16:3	254-72	2	Bearing-Cup, Tapered

Ref.	Part Number	Qty.	Description
16:4	254-94	2	Bearing-Cone, Tapered
17	112-1690	2	Seal-Oil
19	93-0309	2	Washer-Tab
20	3220-7	2	Nut-Jam
21	93-0307	2	Nut-Lock, Retainer
22	3272-12	2	Pin-Cotter
23	241-119	2	Cap-Dust
24	242-50	8	Nut-Lug
25	131-8582	2	Sleeve-Kingpin
27	139-3350	2	Screw-HF
28	147-2765	2	Wheel And Tire ASM
28:1	147-2766	1	Wheel
28:2	127-7435	1	Tire (22 X 9.50-10) 4-Ply
28:3	232-27	1	Stem-Valve
29	99-7667	4	Washer-Flat
30	327-4	4	Screw-HH
31	87-3060	1	Washer-Hardened
32	328-24	1	Screw-HH
33	131-2220	4	Screw-HHF
34	87-2440	1	Bumper-Rubber

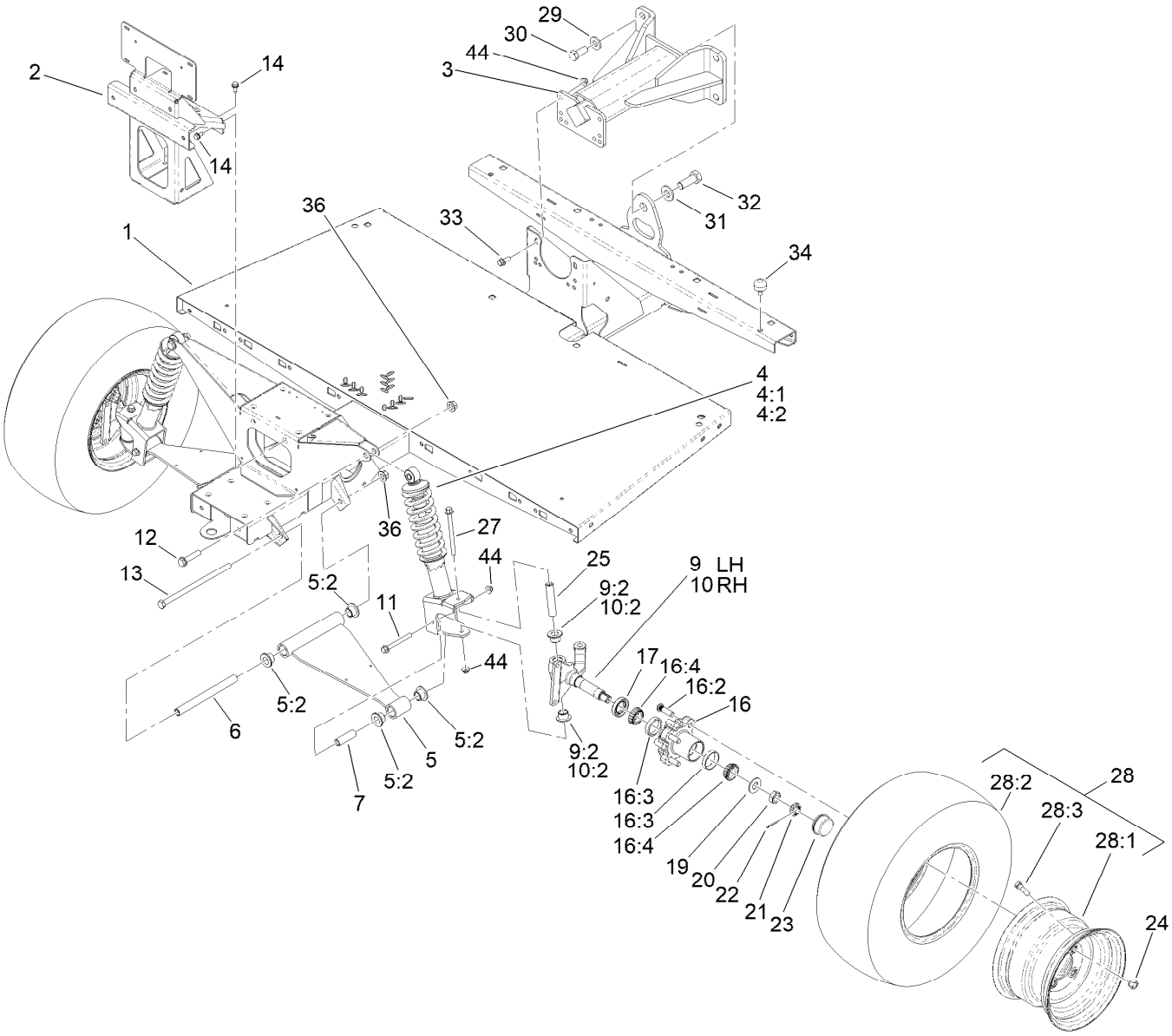

Front Frame and Suspension Assembly (continued)

Ref.	*Part Number*	*Qty.*	*Description*
36	99-5107	4	Nut-Lock
44	139-3380	8	Nut-HF

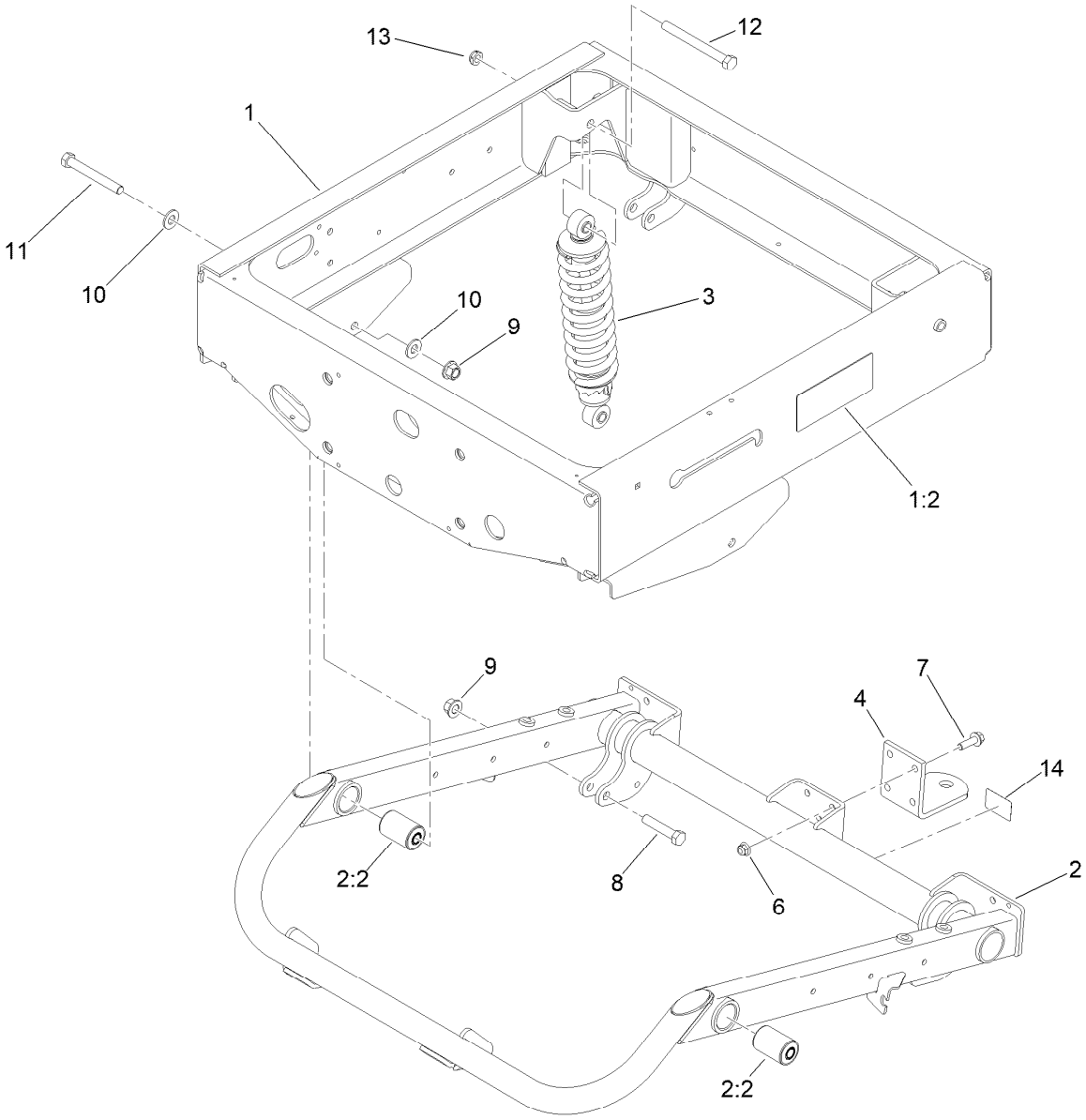

Rear Frame and Suspension Assembly

Ref.	*Part Number*	*Qty.*	*Description*
1	133-0610	1	Frame-Rear
1:2	99-7345	2	Decal-Warning
2	140-2596	1	Swing Arm ASM
2:2	112-3377	2	Bushing-Arm, Control
3	133-0553	2	Shock And Spring ASM
4	99-7654-03	1	Hitch-Duty, Light
6	104-8301	4	Nut-HF, NI
7	3234-24	4	Screw-HHF
8	325-10	2	Screw-HH
9	99-5107	4	Nut-Lock
10	87-7270	4	Washer-Thrust
11	325-17	2	Screw-HH
12	325-19	2	Screw-HH
13	3296-45	2	Nut-Hex
14	136-1164	1	Decal-Load, Towing

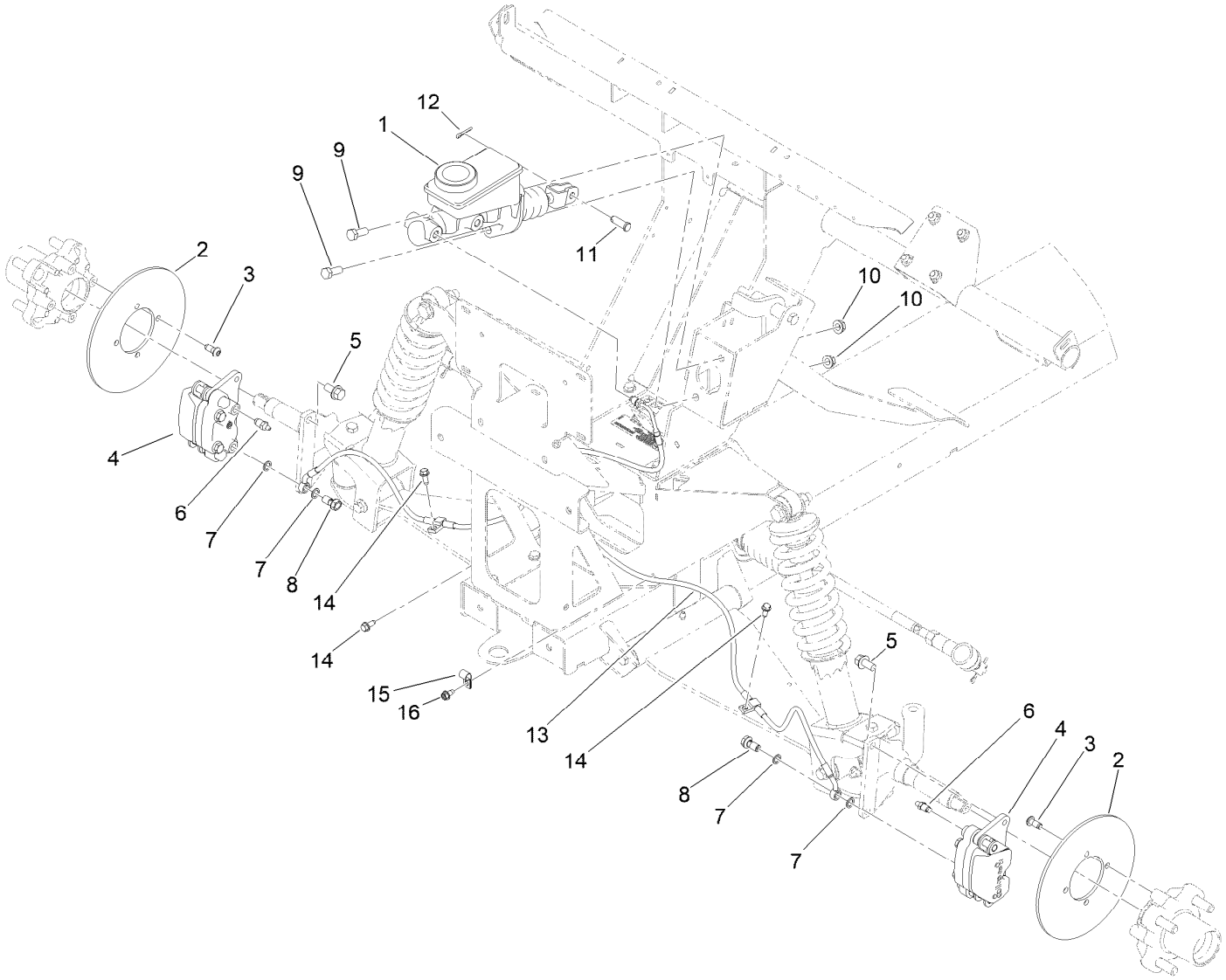

Front Brake Assembly

Ref.	Part Number	Qty.	Description
1	104-6782	1	Master Cylinder ASM
2	136-6295	2	Rotor-Brake
3	121-9671	8	Screw-HSBH
4	127-7424	2	Brake Caliper ASM
5	3234-1	4	Screw-HHF
6	119-9509	2	Screw-Bleed
7	115-2341	4	Washer-Banjo
8	120-4875	2	Bolt-Flange, Banjo

Ref.	Part Number	Qty.	Description
9	323-6	2	Screw-HH
10	104-8301	2	Nut-HF, NI
11	283-2	1	Pin-Clevis
12	3272-10	1	Pin-Cotter
13	132-6793	1	Line-Brake, Front
14	32144-10	3	Screw-HWH
15	2412-89	1	Clamp-R
16	32104-17	1	Screw-HWH

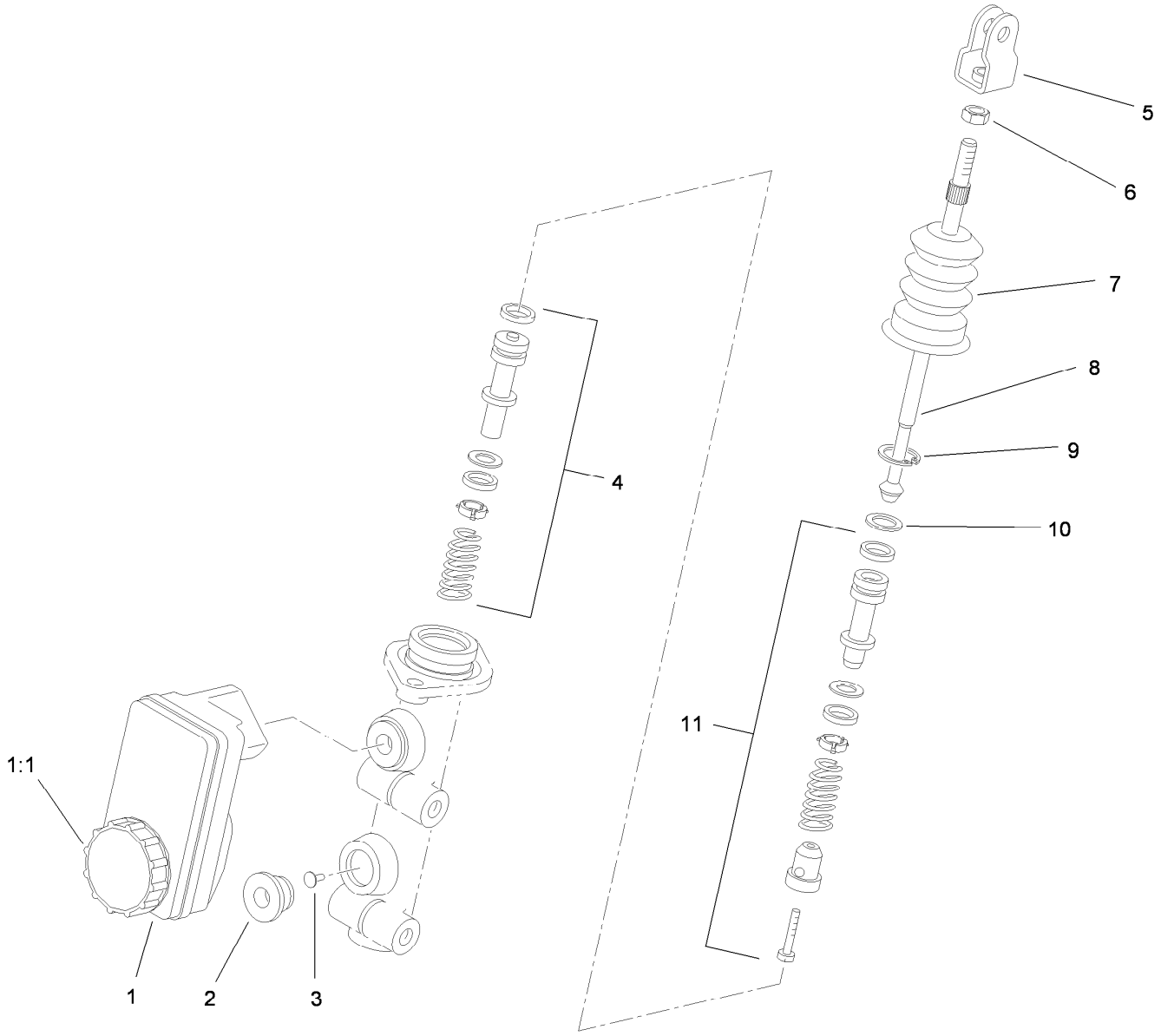

Master Cylinder Assembly No. 104-6782

Ref.	*Part Number*	*Qty.*	*Description*
1	104-6845	1	Reservoir ASM
1:1	92-4112	1	Cap ASM
2	93-8971	2	Seal-Port, Flange
3	92-4103	1	Pin-Stop
4	92-4102	1	Secondary Piston ASM
5	92-4110	1	Clevis
6	21-0360	1	Nut-Hex
7	94-5209	1	Cover-Dust
8	94-5210	1	Rod-Push
9	92-4109	1	Ring-Snap
10	92-4108	1	Retainer-Washer
11	92-4101	1	Primary Piston ASM

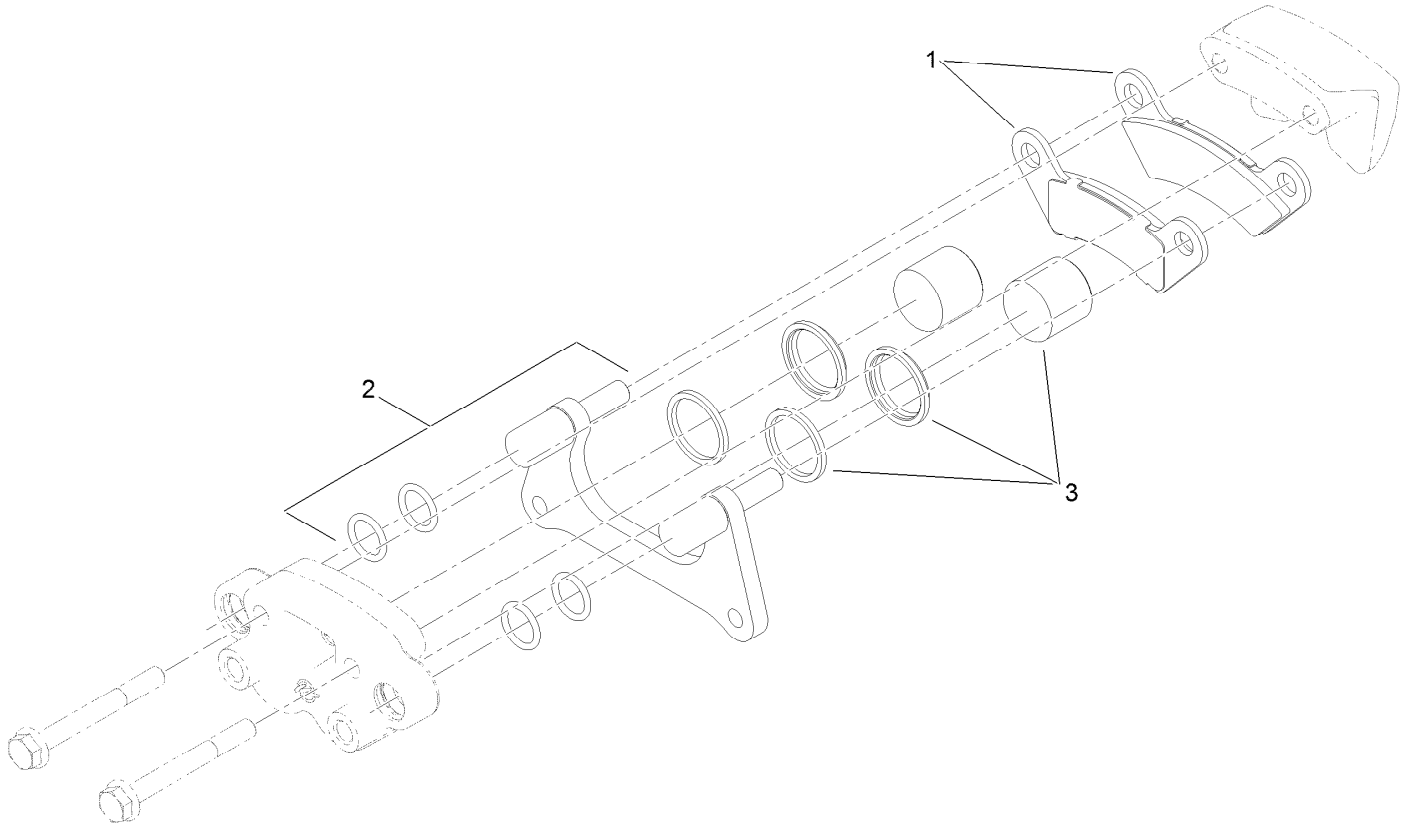

Brake Caliper Assembly No. 127-7424

Ref.	*Part Number*	*Qty.*	*Description*
1	133-0628	1	Brake Pad Kit
2	119-9511	1	Bracket Kit
3	133-0614	1	Piston Kit

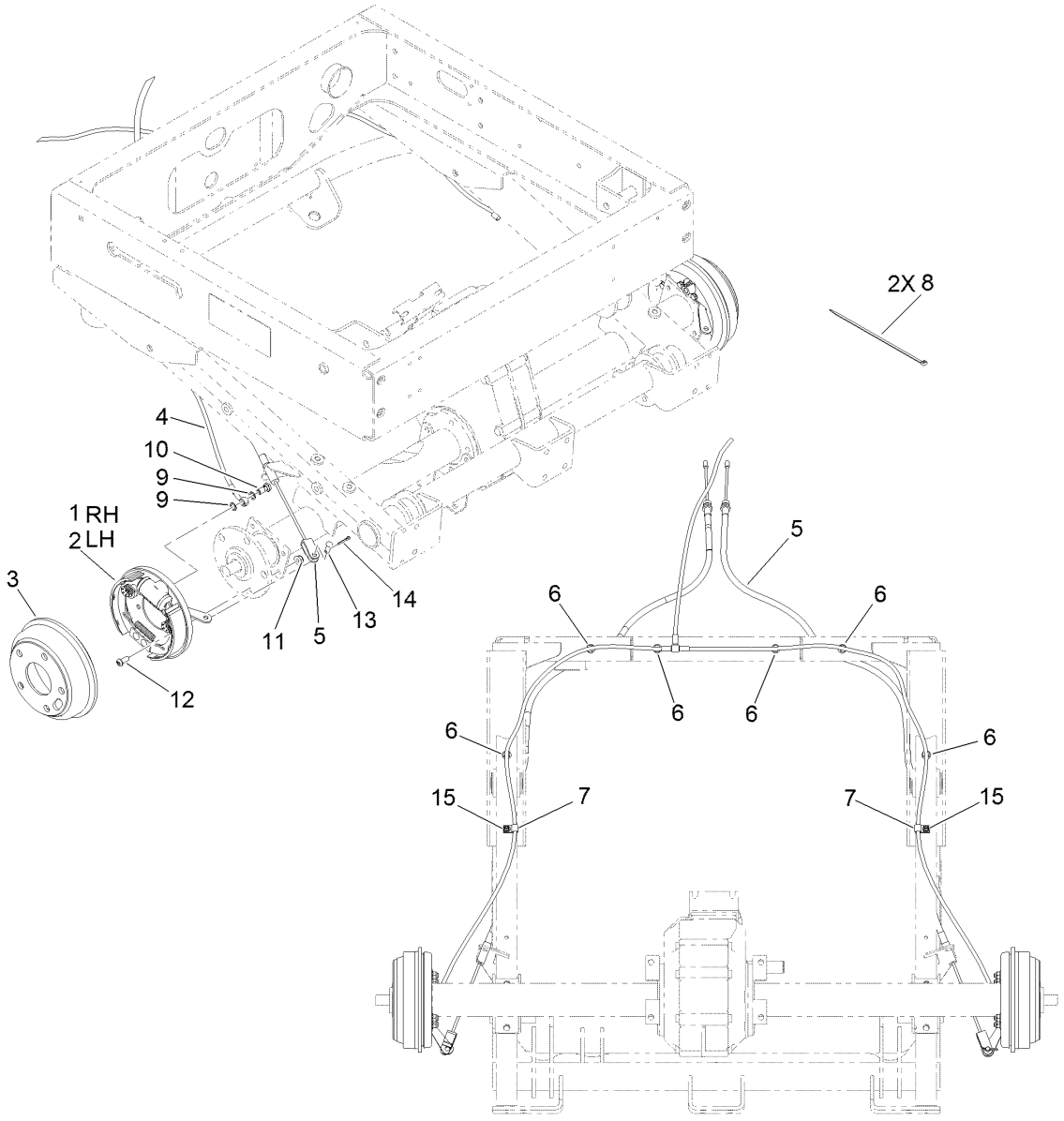

Rear Brake Assembly

Ref.	*Part Number*	*Qty.*	*Description*
1	114-8331	1	RH Brake ASM
2	114-8332	1	LH Brake ASM
3	104-6500	2	Drum-Brake
4	112-2926	1	Rear Brake Line ASM
5	127-8684	2	Cable-Brake, Adjustable
6	32180-030	6	Clip-Tie
7	2412-89	2	Clamp-R
8	3290-378	2	Tie-Cable
9	115-2341	4	Washer-Banjo
10	115-2340	2	Bolt-Banjo
11	104-8300	8	Nut-HF, NI
12	3274-55	8	Screw-HSBH
13	283-62	2	Pin-Clevis
14	3272-10	2	Pin-Cotter
15	32104-17	2	Screw-HWH

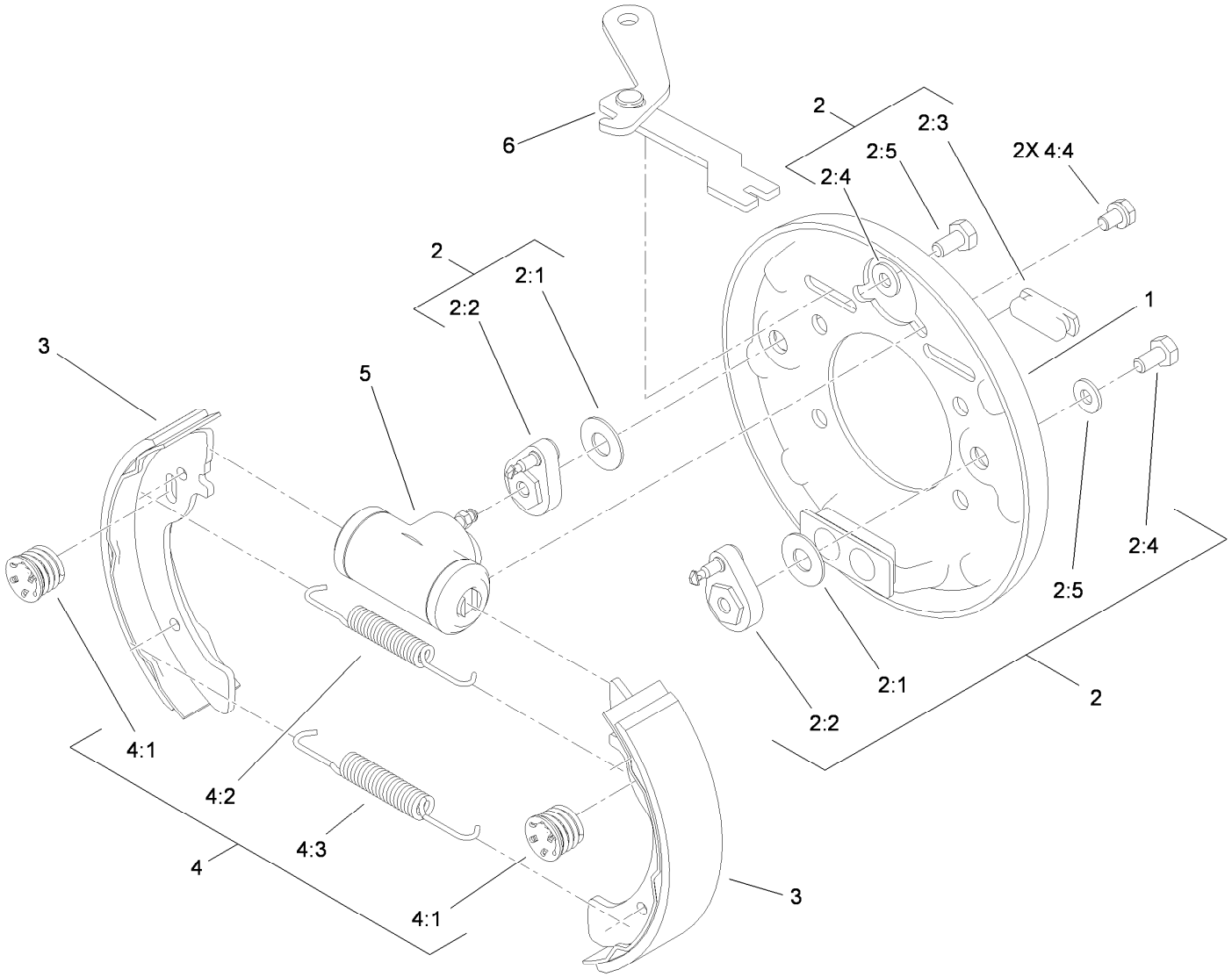

RH Rear Brake Assembly No. 114-8331

Ref.	*Part Number*	*Qty.*	*Description*
1	100-8586	1	Backing Plate ASM
2	104-6820	1	Adjuster Kit
2:1	100-8585	2	Washer-Bellville
2:2	100-8588	2	Adjuster Lever ASM
2:3	100-8584	2	Cover-Dust
2:4		2	Washer ●
2:5		2	Bolt ●
3	104-6818	4	Shoe And Lining Kit
4	104-6819	1	Hardware Kit
4:1	100-8583	4	Shoe Hold Down Spring ASM
4:2	100-8581	2	Spring-Upper
4:3	100-8582	2	Spring-Lower
4:4	139-4494	4	Bolt And Washer ASM
5	114-8333	1	Wheel Cylinder ASM
6	104-6826	1	RH Park Brake Lever ASM

● Not serviced separately

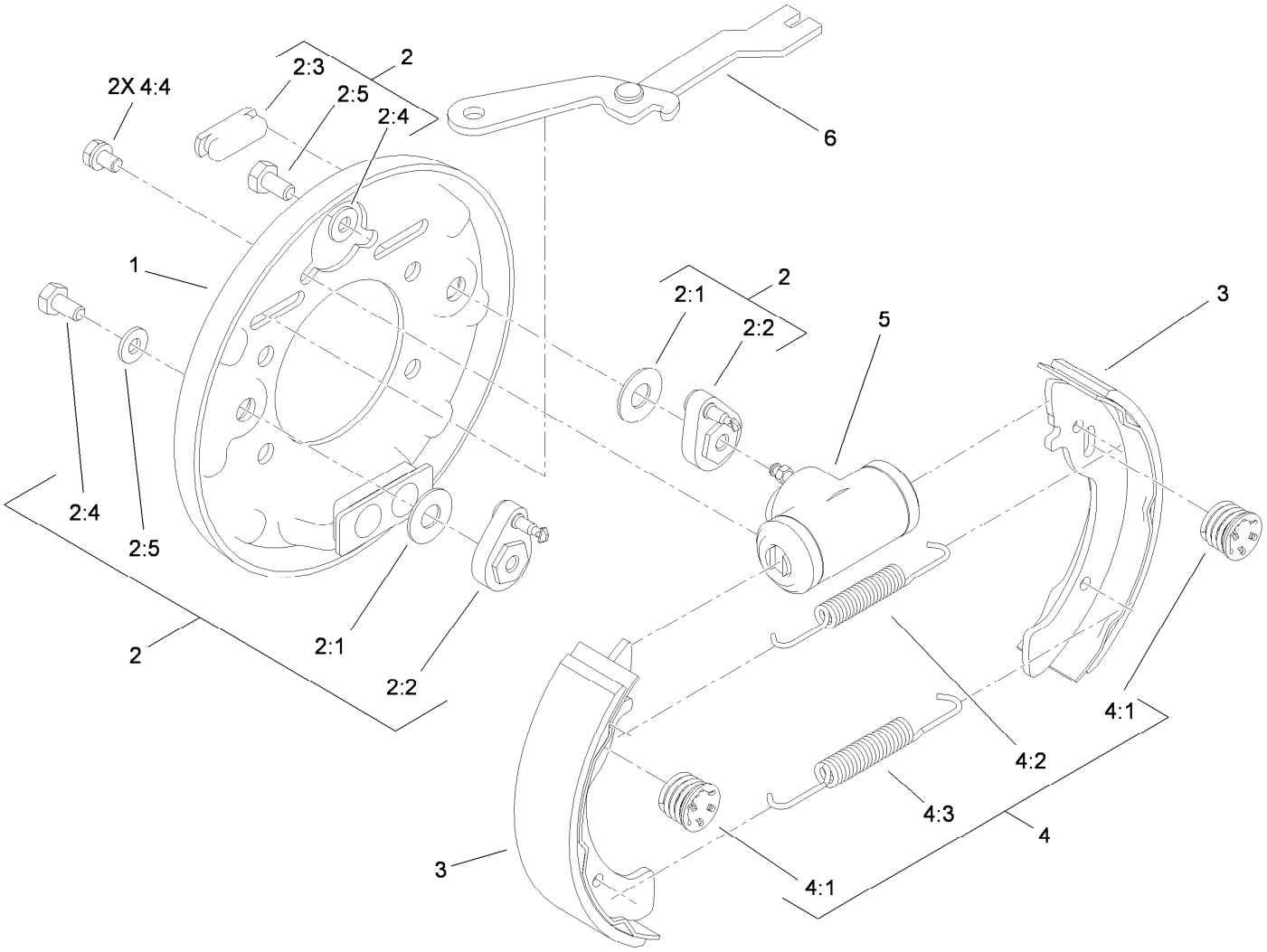

LH Rear Brake Assembly No. 114-8332

Ref.	*Part Number*	*Qty.*	*Description*
1	100-8586	1	Backing Plate ASM
2	104-6820	1	Adjuster Kit
2:1	100-8585	2	Washer-Bellville
2:2	100-8588	2	Adjuster Lever ASM
2:3	100-8584	2	Cover-Dust
2:4		2	Washer ●
2:5		2	Bolt ●
3	104-6818	4	Shoe And Lining Kit
4	104-6819	1	Hardware Kit
4:1	100-8583	4	Shoe Hold Down Spring ASM
4:2	100-8581	2	Spring-Upper
4:3	100-8582	2	Spring-Lower
4:4	139-4494	4	Bolt And Washer ASM
5	114-8333	1	Wheel Cylinder ASM
6	104-6825	1	LH Park Brake Lever ASM

● Not serviced separately

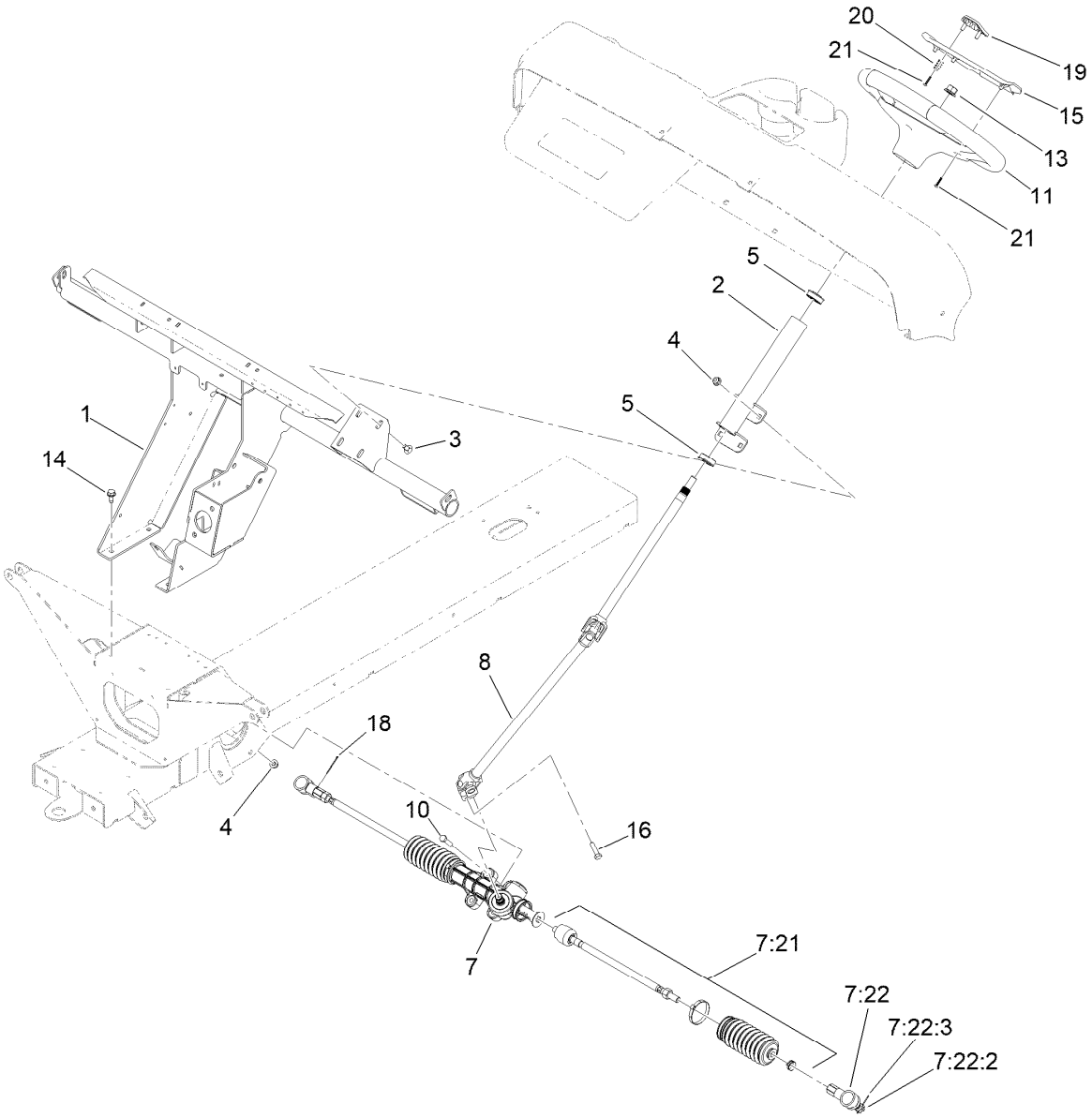

Steering Assembly

Ref.	Part Number	Qty.	Description
1	132-6740-03	1	Support-Dash
2	147-8045	1	Steering Column ASM,MDX
3	3230-1	4	Bolt-CARR
4	104-8300	8	Nut-HF, NI
5	112-3262	2	Bearing
7	140-4560	1	Steering Rack ASM
7:21	140-4594	1	Kit-Tie Rod ASM, MDX
7:22	140-4592	1	Kit-Rod End ASM
7:22:2	3272-42	1	Pin-Cotter
7:22:3	140-2493	1	Nut-Hex, Slotted
8	145-2051	1	Steering Shaft ASM

Ref.	Part Number	Qty.	Description
10	322-6	4	Screw-HH
11	144-5570	1	Steering Wheel ASM
13	99-5107	1	Nut-Lock
14	32144-70	4	Screw-HWHTF
15	144-5567	1	Cover-Wheel, Steering
16	145-7145	1	Screw-HSH,Lock
18	3272-42	2	Pin-Cotter
19	144-5566	1	Clip-Wheel, Steering
20	144-5537	2	Spring-Compression
21	94-4496	5	Screw-PPH

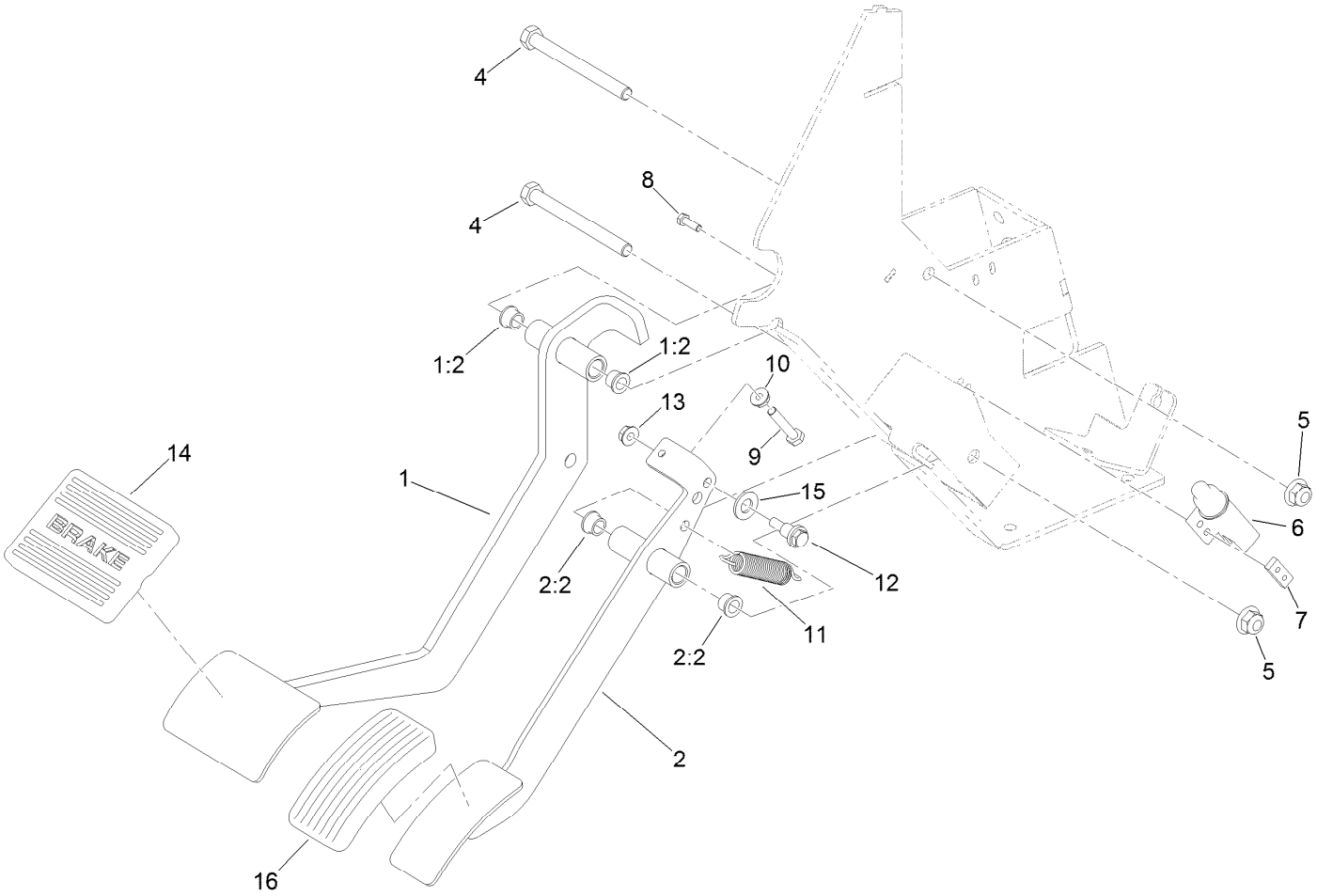

Pedal Assembly

Ref.	Part Number	Qty.	Description
1	138-3581	1	Brake Pedal ASM
1:2	256-116	2	Bushing-Flange
2	138-3582	1	Throttle Pedal ASM, MDX
2:2	256-116	2	Bushing-Flange
4	323-16	2	Screw-HH
5	104-8301	2	Nut-HF, NI
6	99-7407	1	Switch
7	1-633181	1	Plate-Tapped
8	3290-134	2	Screw

Ref.	Part Number	Qty.	Description
9	321-13	1	Screw-HH
10	32149-2	1	Nut-Keps
11	104-6415	1	Spring-Return, Pedal
12	104-0858	1	Bolt-Shoulder
13	32128-33	1	Nut-HF
14	7-3900	1	Pad-Brake
15	3256-24	1	Washer-Plain
16	140-4572	1	Pedal Pad-Throttle

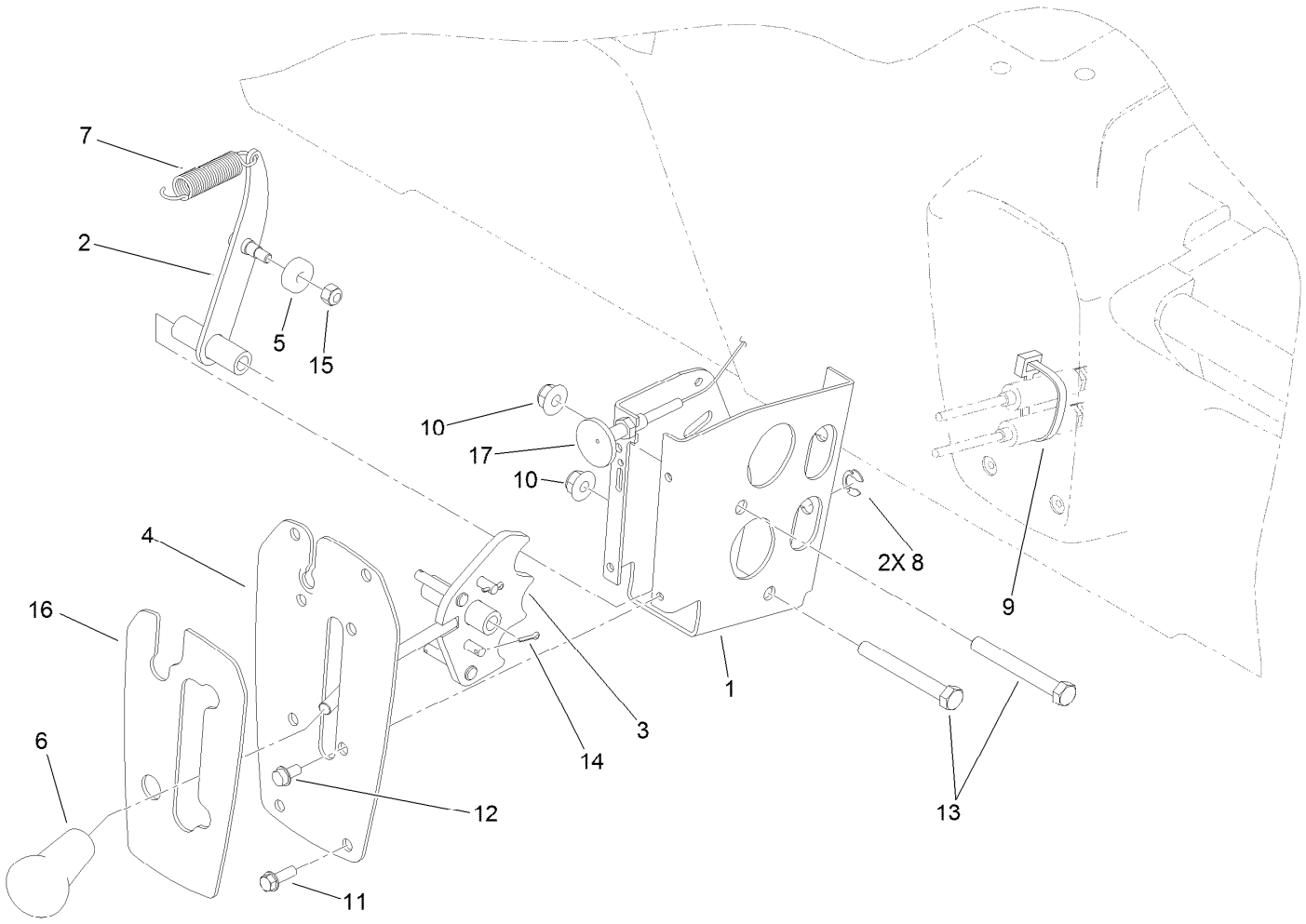

Shifter Assembly

Ref.	Part Number	Qty.	Description
1	108-3141-0P	1	Bracket-Shift
2	108-3138	1	Arm-Detent
3	114-2719	1	Plate-Detent
4	99-7887-03	1	Plate-Shifter
5	251-307	1	Bearing-Ball
6	99-7981	1	Knob-Grip, Soft
7	104-6415	1	Spring-Return, Pedal
8	32151-101	2	E-Ring
9	3290-378	1	Tie-Cable
10	104-8301	2	Nut-HF, NI
11	32105-15	4	Screw-HWH
12	32144-4	4	Screw-HWH
13	323-14	2	Screw-HH
14	3272-5	2	Pin-Cotter
15	3296-42	1	Nut-Lock, NI
16	99-7952	1	Decal-Shifter
17	99-7111	1	Cable-Choke

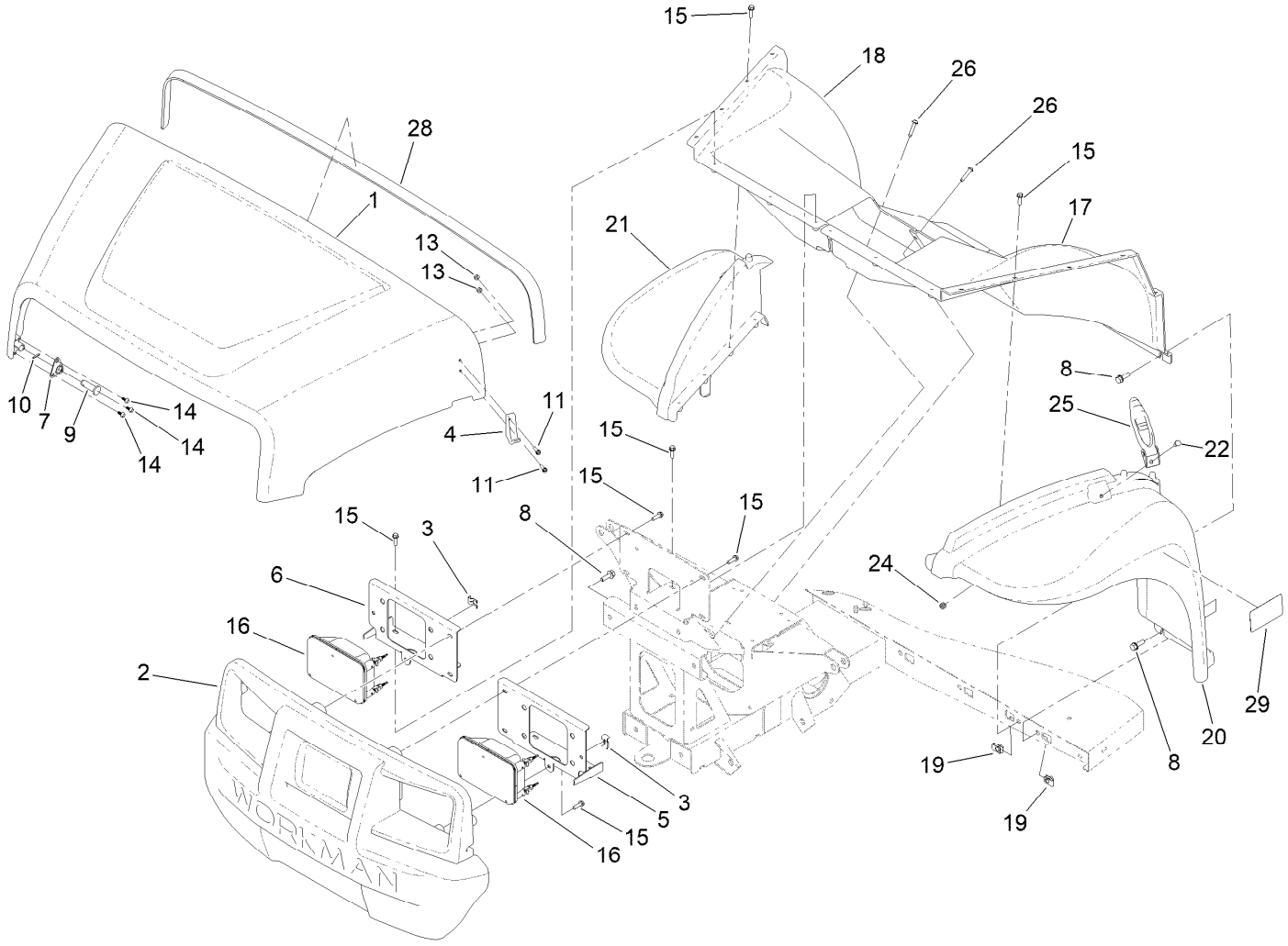

Hood and Fender Assembly

Ref.	Part Number	Qty.	Description
1	136-6281	1	Hood
2	132-8530	1	Bumper
3	115-2408	6	Clip-Speed
4	103-2897	2	Latch-Catch
5	140-4780-03	1	Bracket-Headlight, LH
6	140-4781-03	1	Bracket-Headlight, RH
7	112-3308	2	Retainer-Pin
8	3234-29	12	Screw-HHF
9	117-5094	2	Pin-Clevis
10	32121-50	2	Pin-Spring
11	32105-13	4	Screw-HWH
13	120-4578	4	Nut-HF
14	121-9605	6	Screw-HWH

Ref.	Part Number	Qty.	Description
15	46-8091	24	Screw-HWH
16	138-9260	2	Headlight ASM
17	132-6775	1	Fender-Inner, LH
18	132-6776	1	Fender-Inner, RH
19	112-3306	10	Nut
20	147-3947	1	Fender-Front, LH (MDX)
21	147-3946	1	Fender-Front, RH (MDX)
22	321-39	2	Screw-HH
24	104-7201	2	Nut-HF, NI
25	115-2416	2	Latch-Rubber
26	49-2040	4	Screw-HWHTF
28	115-7635	1	Seal-Foam
29	147-3922	2	Decal-Fender, MDX

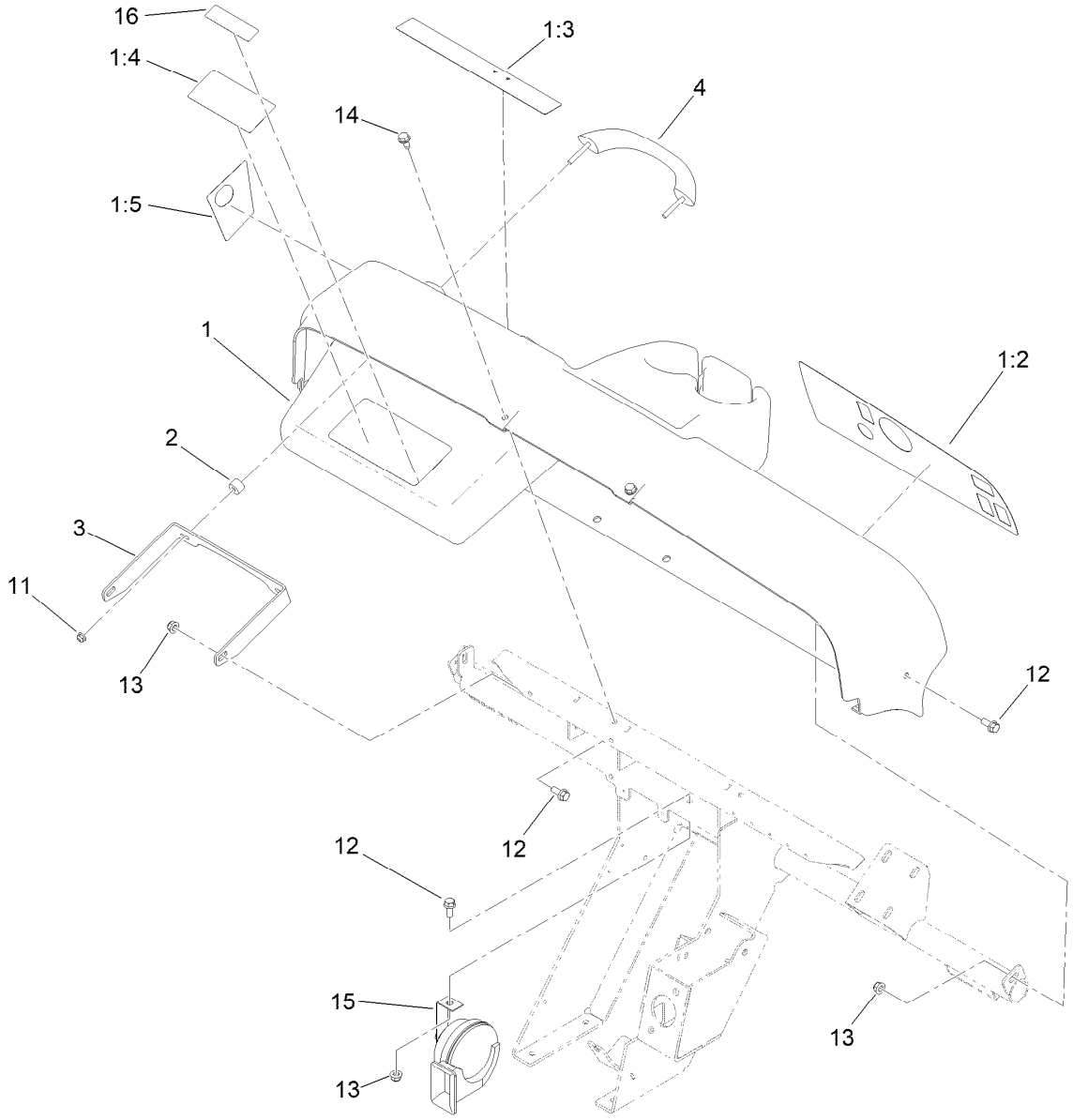

Dash Assembly

Ref.	*Part Number*	*Qty.*	*Description*
1	145-2267	1	Dash ASM-Gas
1:2	145-2269	1	Decal-Control Panel, MDX
1:3	145-2277	1	Decal-Danger
1:4	115-2412	1	Decal-No Storage
1:5	147-8185	1	Decal-USB
2	114-8301	2	Spacer
3	112-3391-03	1	Bracket-Grip, Handle
4	112-3320	1	Handle-Grip
11	104-7201	2	Nut-HF, NI
12	110-5053	4	Screw-HHF
13	104-8300	4	Nut-HF, NI
14	32144-70	6	Screw-HWHTF
15	110-2594	1	Horn
16	145-2278	1	Decal-Fuse Block, Gas

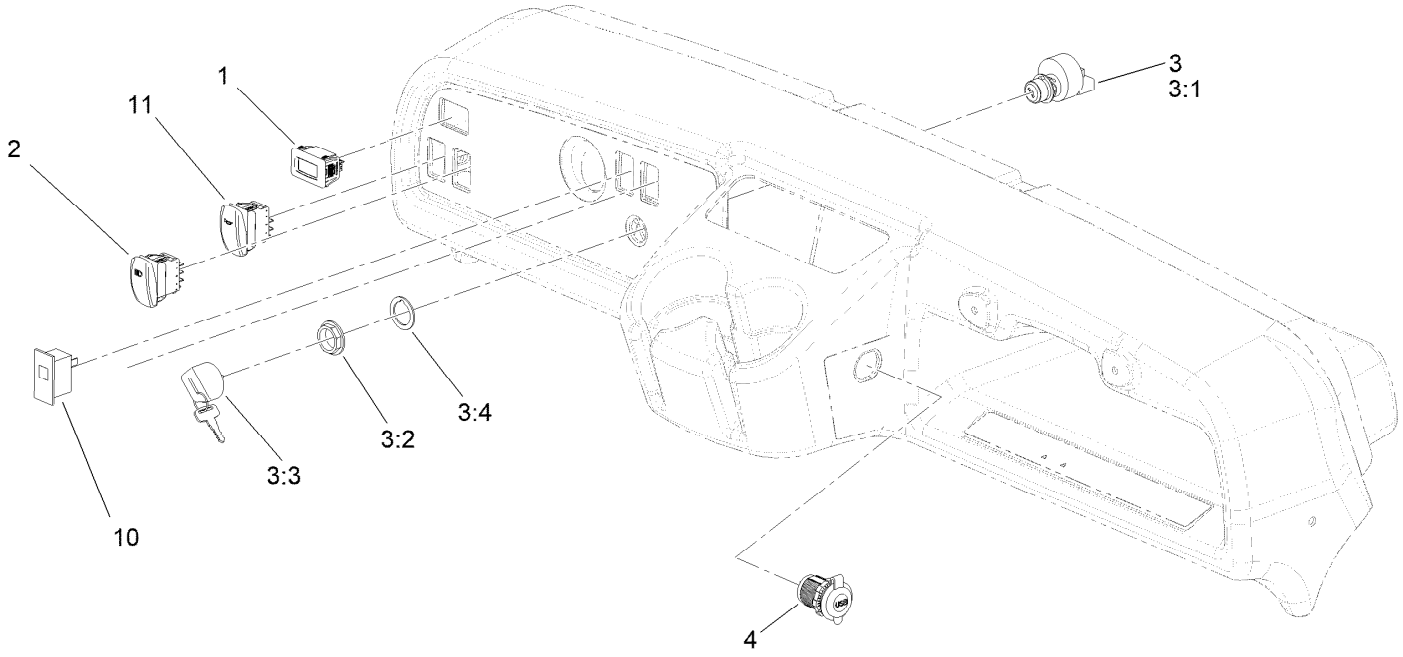

Control Panel Assembly

Ref.	*Part Number*	*Qty.*	*Description*
1	120-2244	1	Hourmeter
2	144-2405	1	Switch-Rocker, On-None-On
3	122-1145	1	Ignition Switch ASM
3:1		1	Switch-Ignition ●
3:2	108-8660	1	Nut-Mounting
3:3	106-5270	1	Ignition Key Set
3:4	108-8659	1	Washer-Backup
4	131-8388	1	Socket-USB
10	99-7410	1	Indicator-Light, Low-Oil Pressure
11	144-2415	1	Switch-Rocker, (On)-None-Off

● Not serviced separately

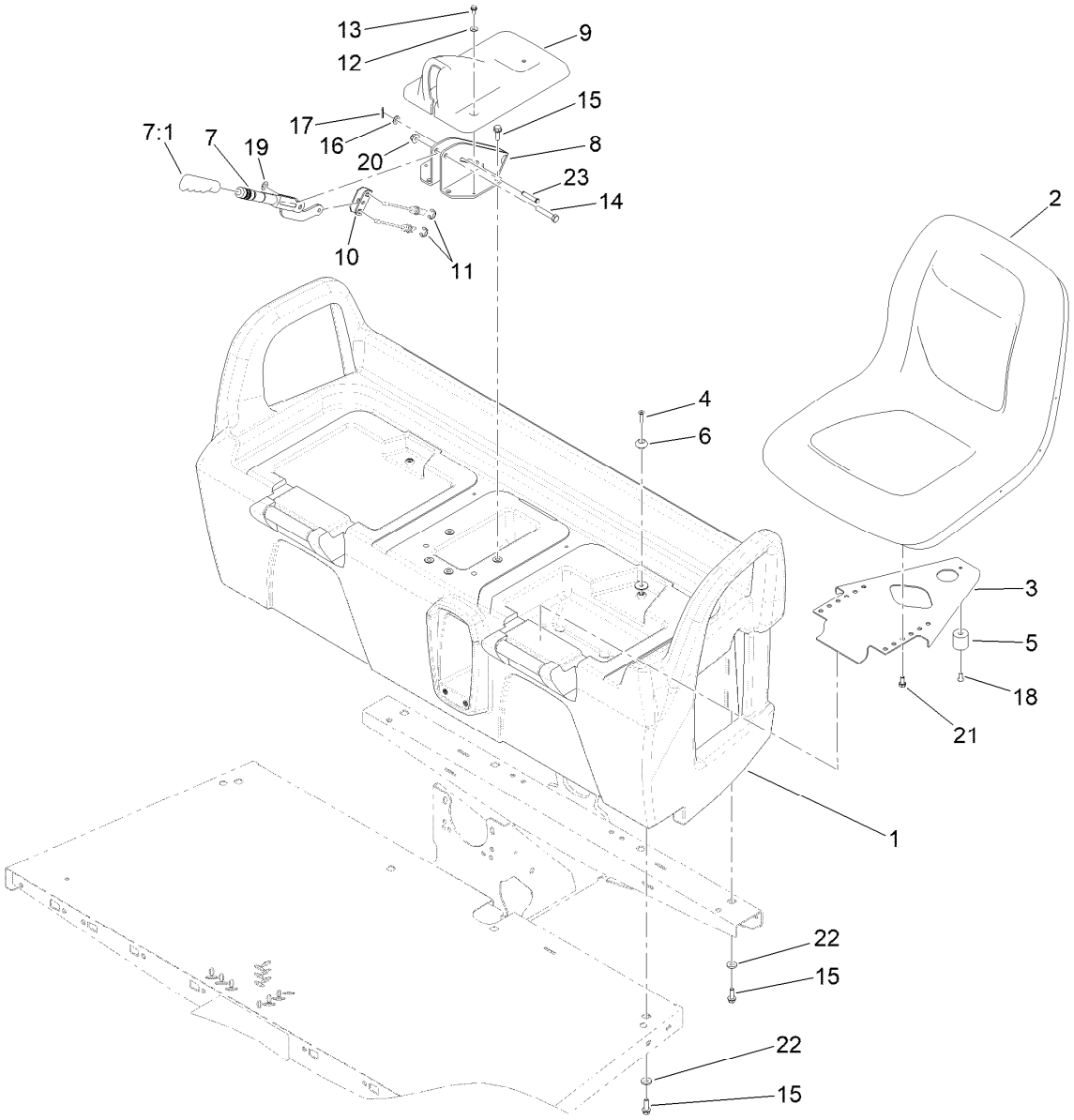

Seatbase Assembly

Ref.	Part Number	Qty.	Description
1	104-6847	1	Base-Seat
2	133-0577	2	Seat ASM
3	99-7829	2	Bracket-Seat
4	32108-5	2	Screw-FH
5	99-7830	2	Receptical-Rubber
6	99-7833	2	Post-Holding
7	127-8863	1	Lever-Brake, Park
7:1	127-8864	1	Grip-Handle
8	104-6844-03	1	Support-Brake, Park
9	104-7014	1	Cover-Brake, Parking
10	87-3480	1	Bracket-Equalizer, Cable
11	32120-47	2	Ring-Retaining, External
12	3256-1	4	Washer-Flat
13	32144-4	2	Screw-HWH
14	323-10	1	Screw-HH
15	3234-17	12	Screw-HHF
16	3256-23	1	Washer-Plain
17	3272-6	1	Pin-Cotter
18	3290-412	2	Rivet-Blind
19	3290-477	1	Washer-Curved
20	104-8301	1	Nut-HF, NI
21	33114-016	8	Screw-HH
22	88-7200	8	Washer-Flat
23	94-3829	1	Pin-Clevis

Cargo Bed Assembly

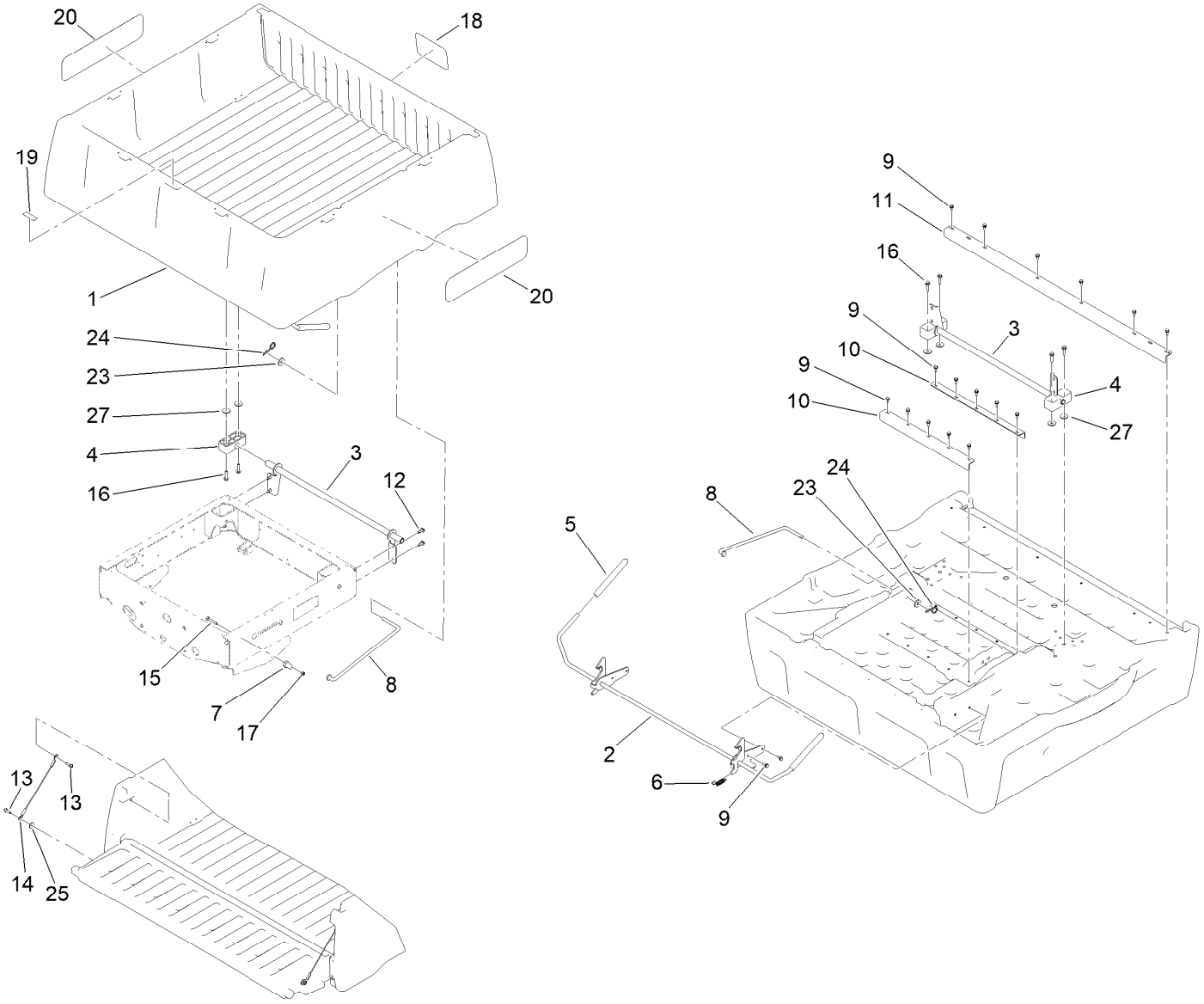

Cargo Bed Assembly (continued)

Ref.	Part Number	Qty.	Description
1	147-4026	1	Cargo Bed/Tailgate ASM [svc]
2	121-6344	1	Latch
3	133-0625-03	1	Bracket-Pivot
4	121-6342	2	Bushing-Pivot
5	119-9627	2	Grip-Handle
6	5-7290	2	Spring-Tension
7	144-2191	2	Pin-Latch
8	121-6316	1	Rod-Prop
9	3234-5	20	Screw-HHF
10	121-6314-03	2	Brace-Bed, Middle
11	121-6315-03	1	Brace-Bed, Rear
12	126-1696	4	Screw-HWHTF
13	119-2267	4	Screw-Shoulder, BHTF
14	121-6343	2	Lanyard-Tailgate
15	3230-7	2	Bolt-CARR
16	3234-18	4	Screw-HHF
17	104-8300	2	Nut-HF, NI
18	104-7213	3	Decal
19	115-7739	1	Decal-No Riders
20	140-4835	2	Decal-Workman, Gray
23	110-6147	1	Washer-Flat
24	107-3155	1	Hairpin
25	115-7109	2	Washer-Flat
27	87-5330	4	Washer

Cargo Bed Service Assembly No. 147-4026

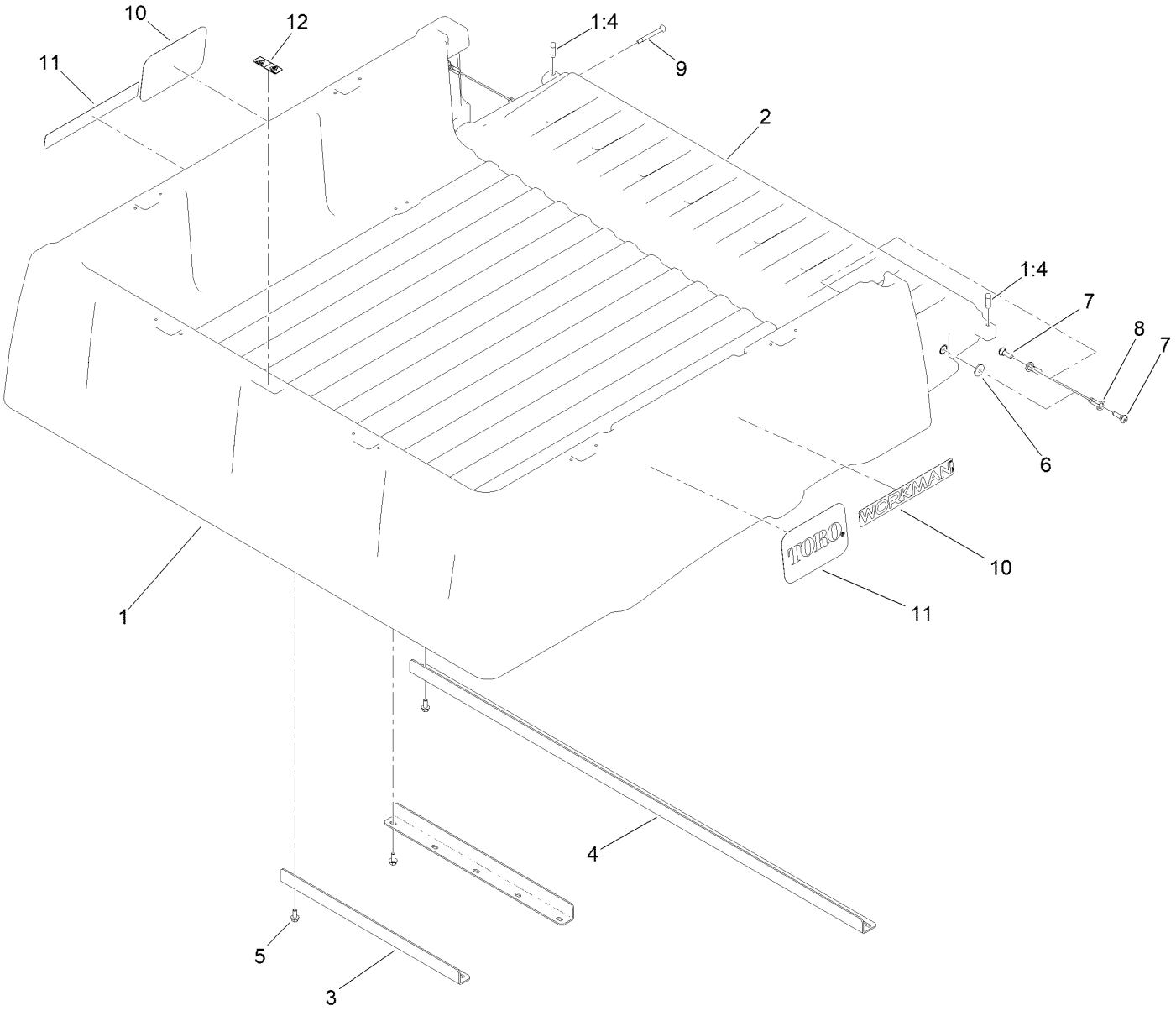

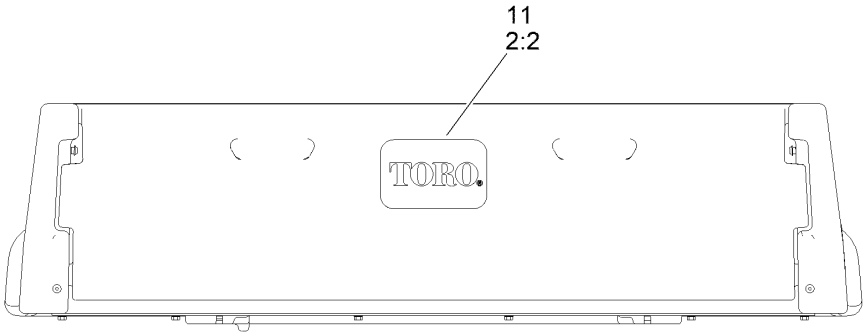

Cargo Bed Service Assembly No. 147-4026 (continued)

Ref.	Part Number	Qty.	Description
1		1	Cargo Bed And Tailgate ASM ●
1:4	133-7146	2	Plug-Tailgate, Anti-Rattle
2	133-0561	1	Tailgate ASM W/Decals
2:2	104-7213	1	Decal
3	121-6314-0P	2	Brace-Middle, Bed
4	121-6315-0P	1	Brace-Rear, Bed
5	3234-5	16	Screw-HHF
6	115-7109	2	Washer-Flat
7	119-2267	4	Screw-Shoulder, BHTF
8	121-6343	2	Lanyard-Tailgate
9	127-7383	2	Screw-Shoulder, Bh (Torx)
10	140-4835	2	Decal-Workman, Gray
11	104-7213	3	Decal
12	115-7739	1	Decal-No Riders

● Not serviced separately

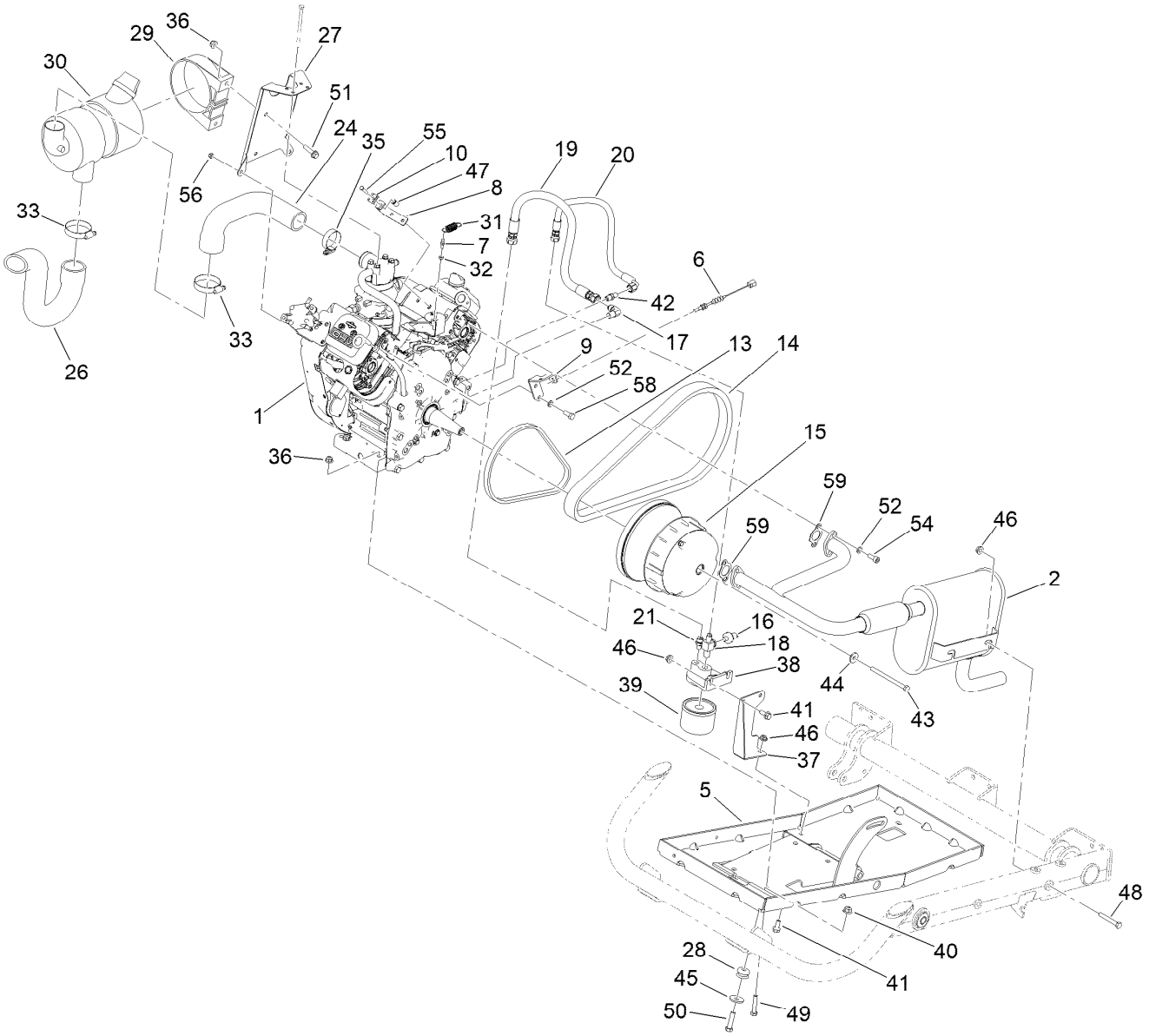

Engine, Clutch and Air Cleaner Assembly

Ref.	Part Number	Qty.	Description
1	140-2599	1	Engine-Briggs And Stratton ●
2	139-3399	1	MDX Exhaust ASM
5	119-0709-03	1	Tray-Engine
6	115-7612	1	Cable-Accelerator
7	99-7847	1	Ball-Stud
8	107-0319	1	Bracket-Cable
9	115-2393	1	Bracket-Cable
10	81-1690	1	Clamp-Cable
13	121-9778	1	Belt-V
14	136-6296	1	Belt-Variable
15	138-0094	1	Clutch-Primary
16	115-2316	1	Switch-Pressure F/W
17	115-2317	1	Fitting-Elbow
18	119-0826	1	Fitting-Tee
19	119-0831	1	Hose-HYD
20	119-0832	1	Hose-HYD
21	119-0833	1	Fitting-Straight

Ref.	Part Number	Qty.	Description
24	131-6696	1	Hose-Air Intake
26	115-7623	1	Hose-Intake
27	132-6796-03	1	Bracket-Cleaner, Air
28	63-9750	2	Mount
29	95-5806	1	Bracket-Mounting, Air Cleaner
30	99-7120	1	Air Cleaner ASM
31	71-5470	1	Spring-Brake
32	110-2619	1	Keeper-Spring
33	2412-130	2	Clamp-Hose
35	2412-3	1	Clamp-Hose
36	104-8300	6	Nut-HF, NI
37	112-3240-03	1	Bracket-Filter, Oil
38	115-2314	1	Adapter-Filter, Oil
39	107-7817	1	Filter-Oil, Engine
40	104-8301	2	Nut-HF, NI
41	110-5053	4	Screw-HHF
42	112-3282	1	Fitting-Straight

● Obtain parts from www.briggsandstratton.com

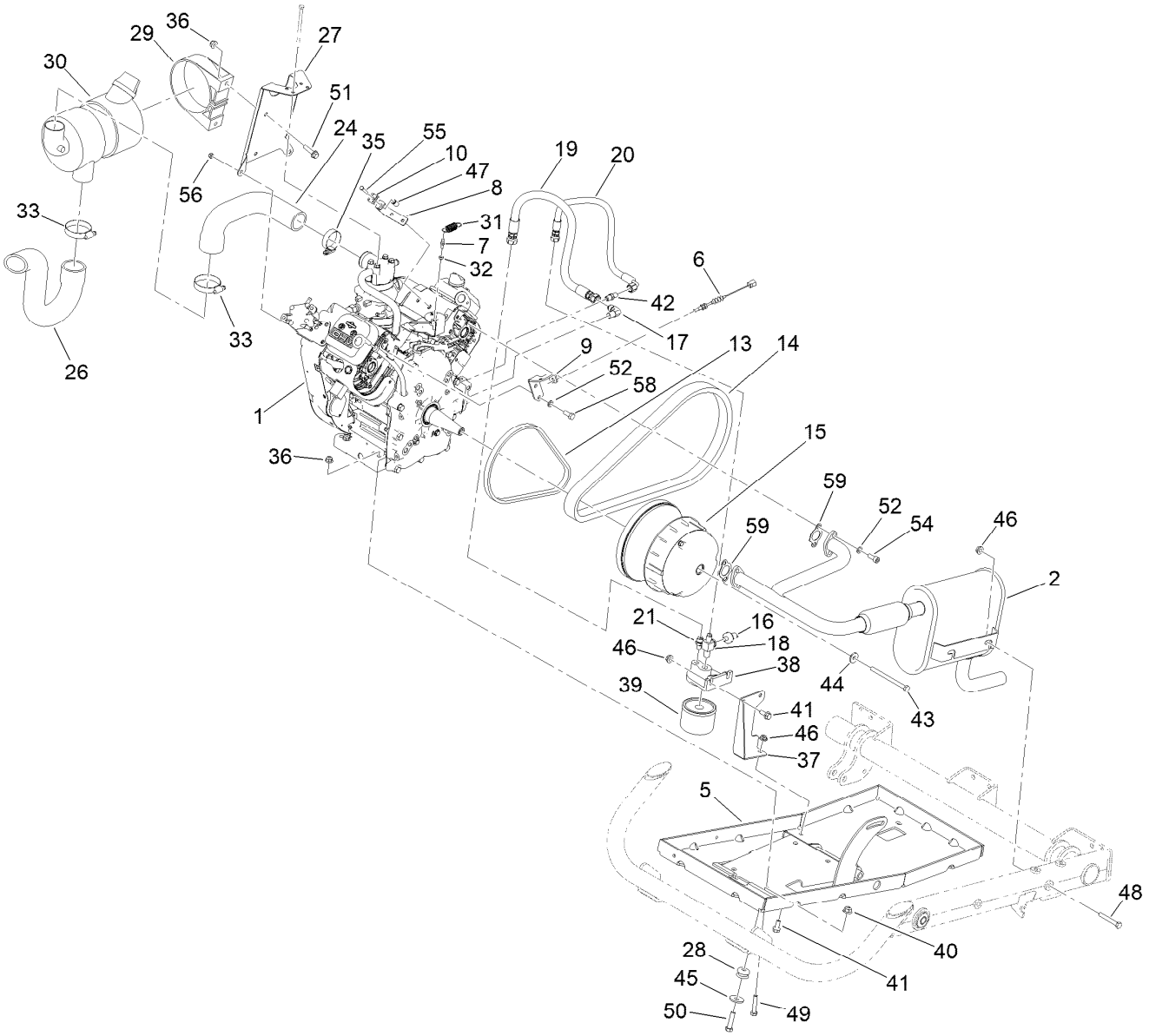

Engine, Clutch and Air Cleaner Assembly (continued)

Ref.	Part Number	Qty.	Description
43	119-0722	1	Screw-HH
44	119-0724	1	Washer-Flange
45	2844	2	Washer
46	32128-20	6	Nut-HF
47	32148-14	1	Nut-Clinch
48	139-4479	2	Screw-HHF
49	322-9	4	Screw-HH
50	323-8	2	Screw-HH

Ref.	Part Number	Qty.	Description
51	3234-36	2	Screw-HHF
52	3253-4	6	Washer-Lock
54	108-6343	4	Screw-HSH,Lock
55	3290-432	1	Screw-HH
56	33023-00	2	Nut-Lock
58	66-3160	2	Screw-Cap
59	94-5844	2	Gasket

● Obtain parts from www.briggsandstratton.com

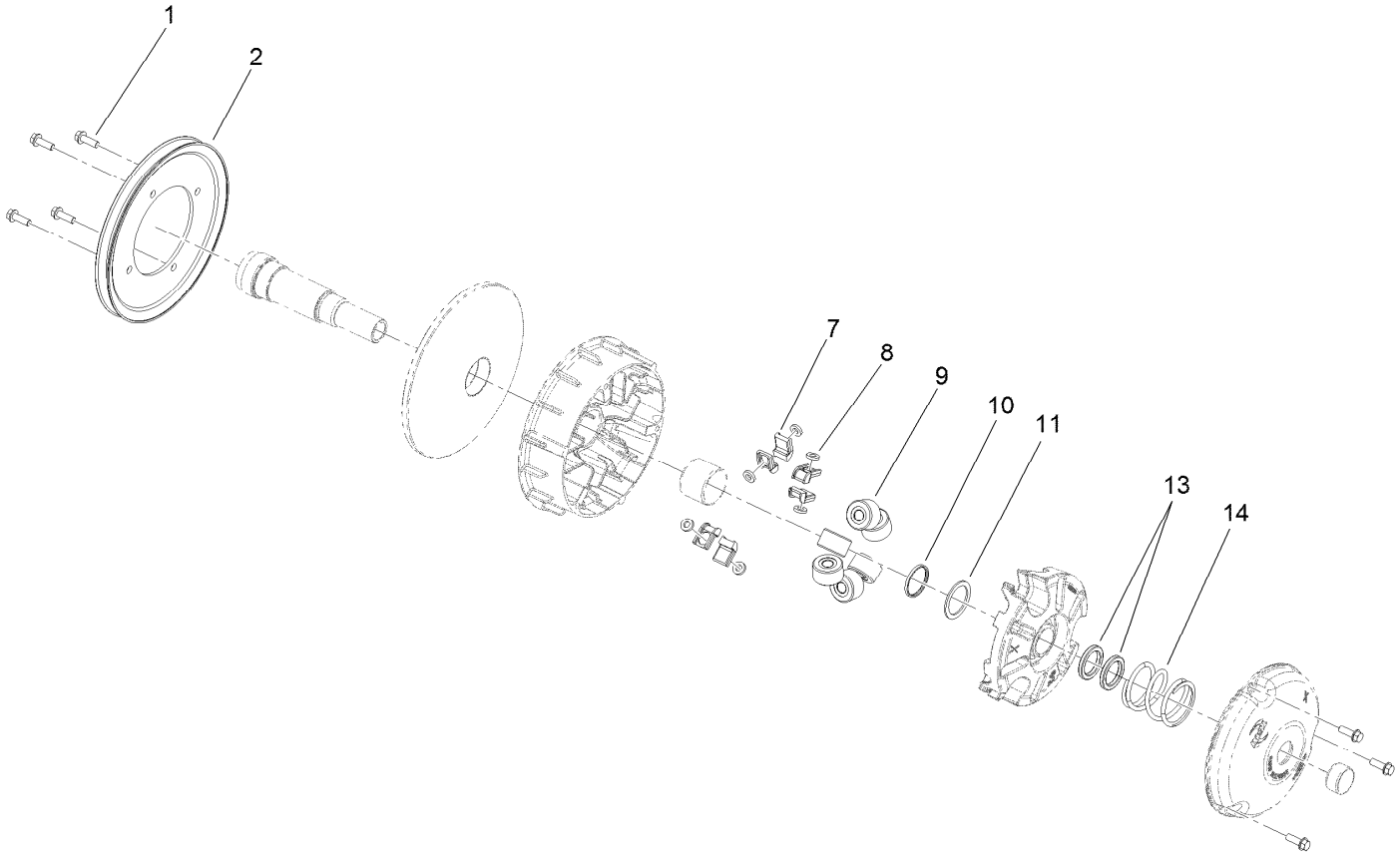

Primary Clutch Assembly No. 138-0094

Ref.	*Part Number*	*Qty.*	*Description*
1	49-2040	7	Screw-HWHTF
2	119-0813	1	Pulley-Primary
7	127-8689	6	Button-Primary, Torque
8	127-8690	6	Plug-Button, Torque
9	119-0804	6	Weight-Roller
10	119-0815	1	Shim-Spider
11	119-0812	1	Shim-Spider
13	119-0807	2	Shim-Limiter
14	119-9532	1	Spring-Red/White

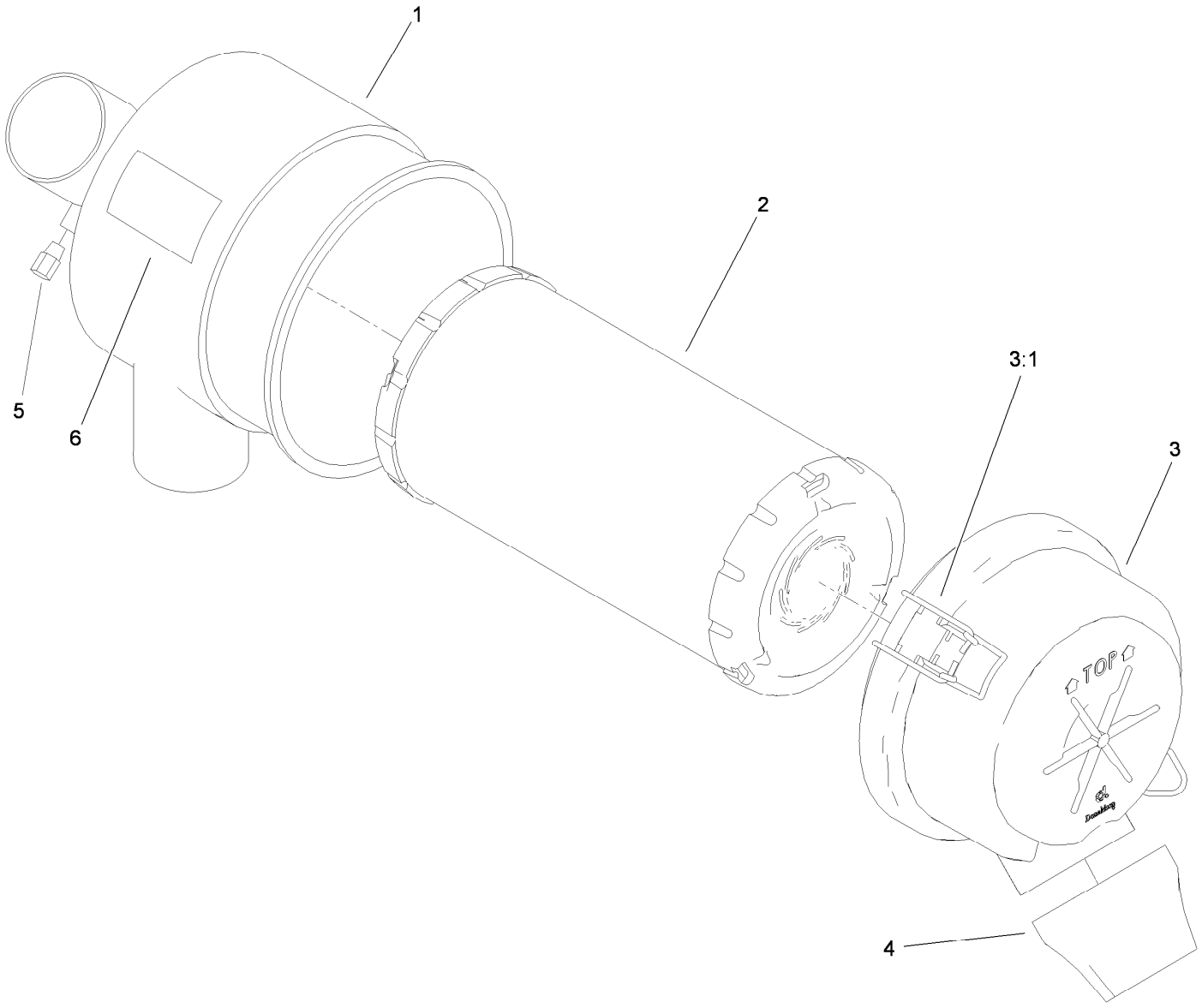

Air Cleaner Assembly No. 99-7120

Ref.	*Part Number*	*Qty.*	*Description*
1		1	Body ●
2	108-3811	1	Filter-Air V-Twin HD
3	94-3652	1	Cover ASM
3:1	1-643283	2	Latch-Cleaner, Air
4	87-9400	1	Valve-Vacuator
5		1	Plug ●
6		1	Marking ●

● Not serviced separately

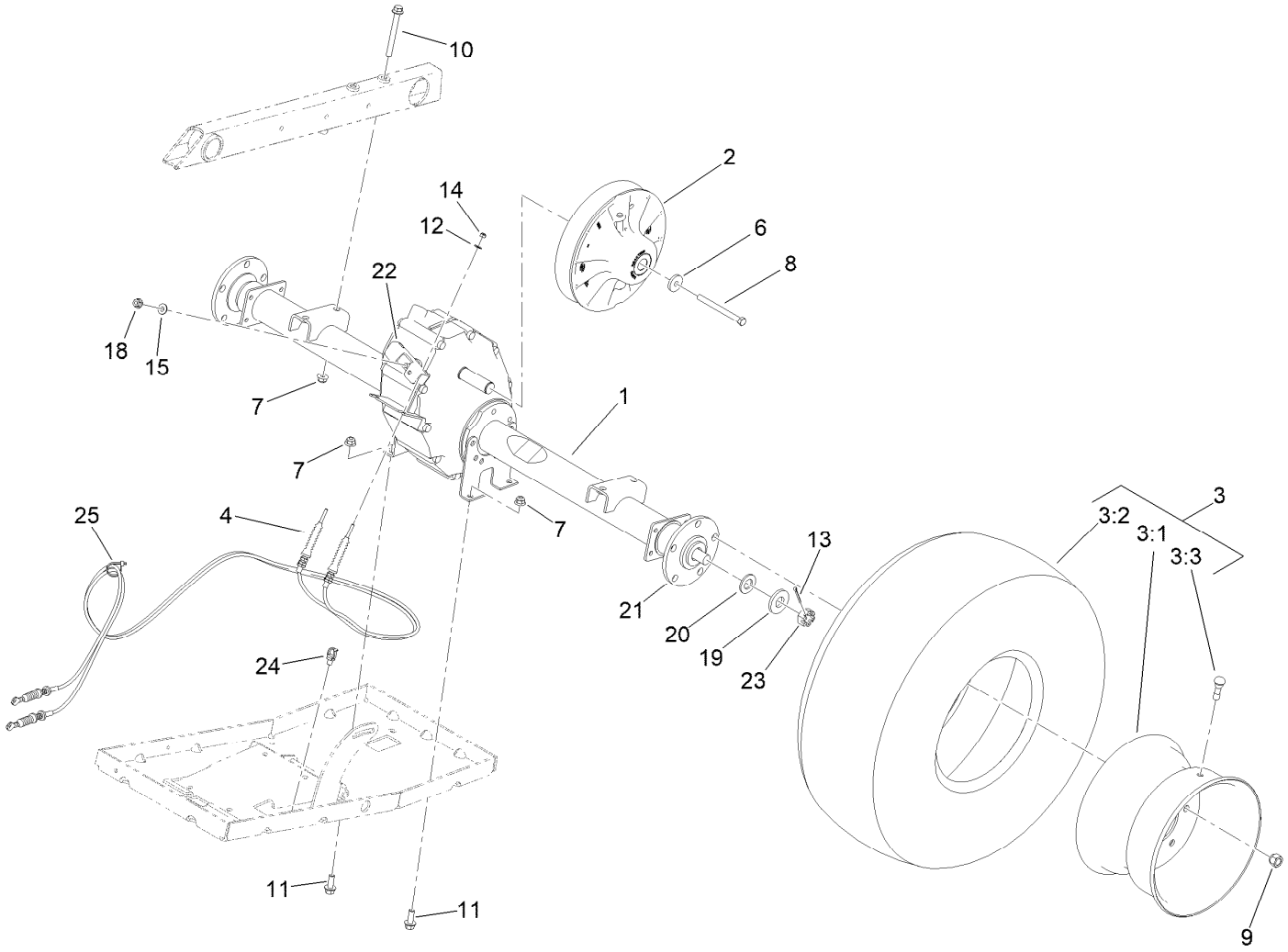

Rear Axle Drive System Assembly

Ref.	Part Number	Qty.	Description
1	119-0760	1	Transaxle ASM
2	136-6289	1	Clutch-Secondary
3	147-2767	2	Wheel And Tire ASM
3:1	147-2768	1	Wheel
3:2	131-6667	1	Tire (24 X 12.00-10) 4P K506
3:3	232-27	1	Stem-Valve
4	115-7679	2	Cable-Control, Tension
6	104-6563	1	Washer-Stepped
7	104-8301	8	Nut-HF, NI
8	119-0723	1	Screw-HH, Lock
9	242-50	10	Nut-Lug
10	116-4701	4	Screw-HHF
11	3234-11	4	Screw-HHF
12	3256-49	2	Washer-Plain
13	3272-12	2	Pin-Cotter
14	3296-2	2	Nut-Lock, NI
15	87-8640	1	Washer-Flat
18	104-1672	1	Nut-Lock
19	133-0632	2	Spacer
20	104-1674	2	Washer
21	104-1675	2	Hub
22	104-6860	1	Lever-Select
23	104-1656	2	Nut-Castle
24	32180-030	1	Clip-Tie
25	3290-378	1	Tie-Cable

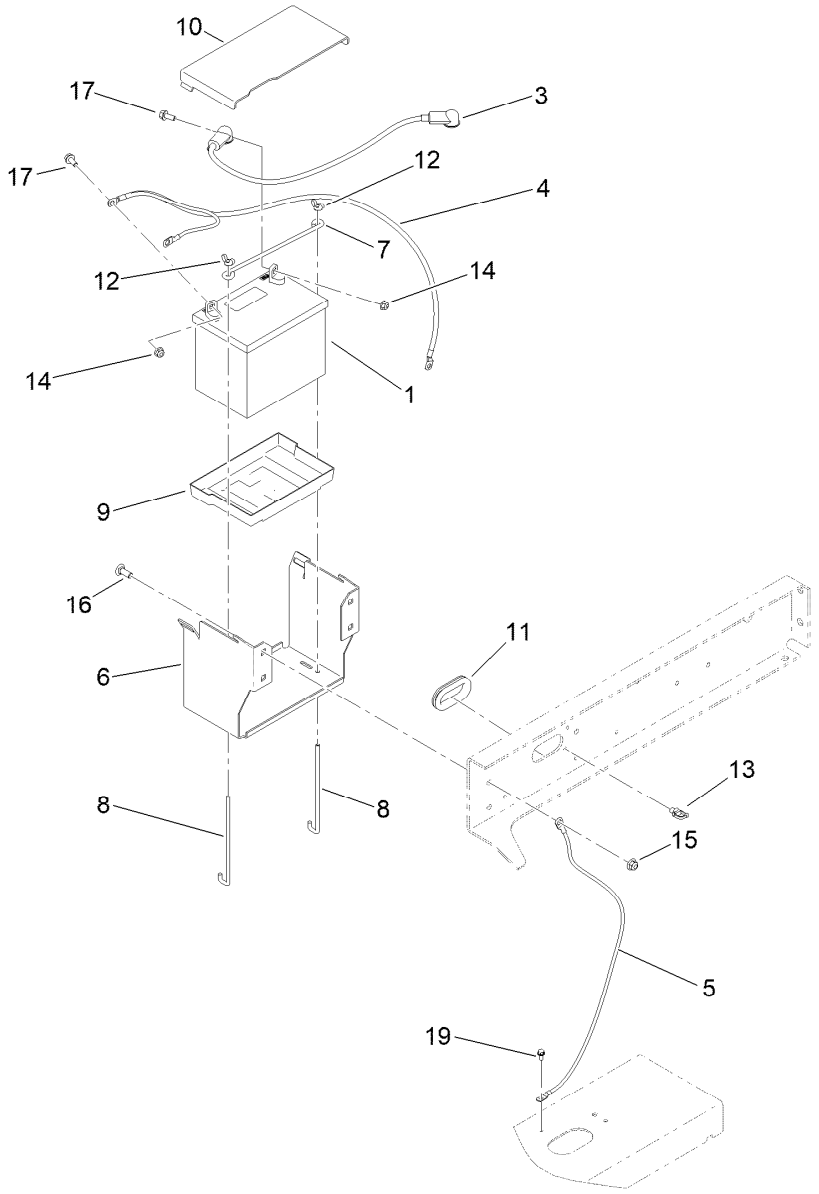

Battery Assembly

Ref.	Part Number	Qty.	Description
1	104-8162	1	Battery
3	114-9404	1	Cable-Battery, Positive
4	115-8107	1	Cable-Battery, Negative
5	115-8108	1	Cable-Battery, Negative
6	115-2302-03	1	Base-Battery
7	100-6434	1	Rod-Hold Down, Battery
8	100-6435	2	Post-Battery
9	106948	1	Tray-Battery
10	115-2394	1	Cover-Battery

Ref.	Part Number	Qty.	Description
11	240-12	1	Grommet-Rubber
12	32103-22	2	Nut-Wing
13	32180-030	2	Clip-Tie
14	104-8300	2	Nut-HF, NI
15	104-8301	4	Nut-HF, NI
16	3231-22	4	Screw-CARR
17	3234-5	2	Screw-HHF
19	32144-4	1	Screw-HWH

Transaxle Assembly No. 119-0760

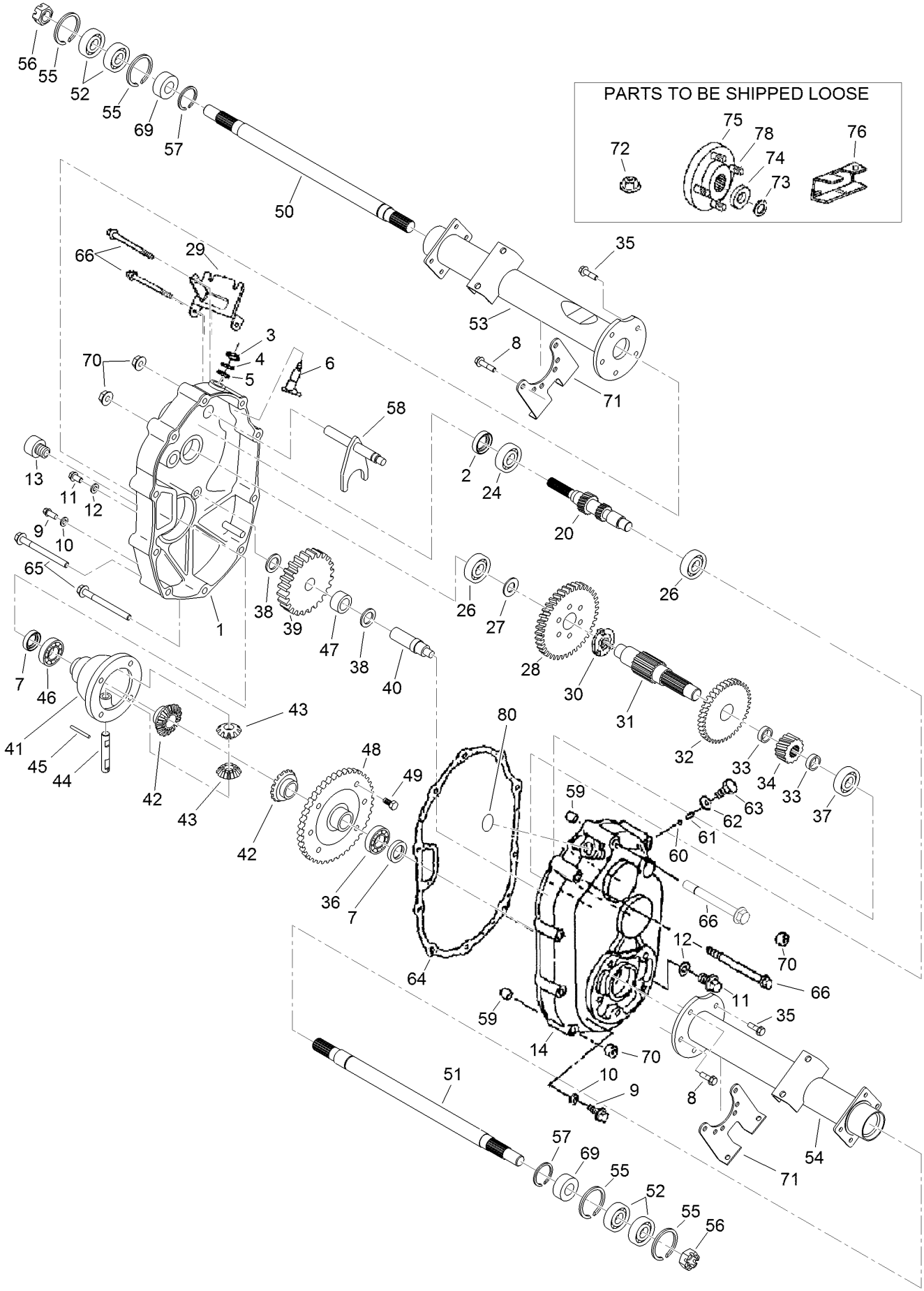

Transaxle Assembly No. 119-0760 (continued)

Ref.	Part Number	Qty.	Description
1	104-1601	1	Case-LH, Complete
2	104-1602	1	Seal-Oil
3	104-1603	1	Seal-Oil
4	104-1604	1	Ring-Snap
5	104-1605	1	Spacer
6	104-1606	1	Shaft-Selector
7	104-1607	2	Seal-Oil
8	104-1608	4	Bolt-Flange
9	104-1609	2	Plug-Check, Oil
10	104-1610	2	Gasket
11	104-1611	2	Plug-Drain, Oil
12	104-1612	2	Gasket
13	104-1613	1	Plug-Filler, Oil
14	104-1614	1	Case-Complete, RH
20	104-7002	1	Shaft-Input, Complete
24	104-1624	1	Bearing-Ball
26	104-1626	2	Bearing-Ball
27	104-1627	1	Spacer
28	104-1628	1	Gear
29	104-1629	1	Bracket-Wire, Change
30	104-1630	1	Clutch-Pin
31	104-1631	1	Shaft-Center
32	104-1632	1	Gear
33	104-1633	2	Collar
34	104-1634	1	Gear
35	104-1635	6	Bolt-Flange
36	104-1636	1	Bearing-Ball
37	104-1637	1	Bearing-Ball
38	104-1638	2	Spacer
39	104-1639	1	Gear
40	104-1640	1	Shaft-Counter
41	104-1641	1	Case-Differential
42	104-1642	2	Gear-Side, Differential
43	104-1643	2	Pinion-Differential
44	104-1644	1	Shaft-Differential
45	104-1645	1	Pin
46	104-1646	1	Bearing-Ball
47	104-1647	1	Bearing-Needle
48	104-1648	1	Gear
49	104-1649	6	Bolt
50	104-1650	1	Shaft-Axle, LH
51	104-1651	1	Shaft-Axle, RH
52	104-1652	4	Bearing-Ball
53	104-1653	1	Case-Axle, LH
54	104-1654	1	Case-Axle, RH
55	104-1655	4	Ring-Snap
56	104-1656	2	Nut-Castle
57	104-1657	2	Ring-Snap
58	104-6870	1	Shaft-Shift, Complete
59	104-1659	2	Knock-Pipe
60	104-1660	1	Ball-Steel
61	104-1661	1	Spring
62	104-1662	1	Gasket
63	104-1663	1	Bolt
64	104-1664	1	Gasket
65	104-1665	6	Bolt-Flange
66	104-1666	4	Bolt-Flange
69	104-6867	2	Collar
70	33004-00	10	Nut-HF
71	104-1671	2	Bracket-Axle
72	104-1672	1	Nut-Lock
73	104-1673	2	Washer-Spring
74	104-1674	2	Washer
75	104-1675	2	Hub
76	104-6860	1	Lever-Select
78	104-8649	10	Stud
80	121-9718	1	Cap-Seal

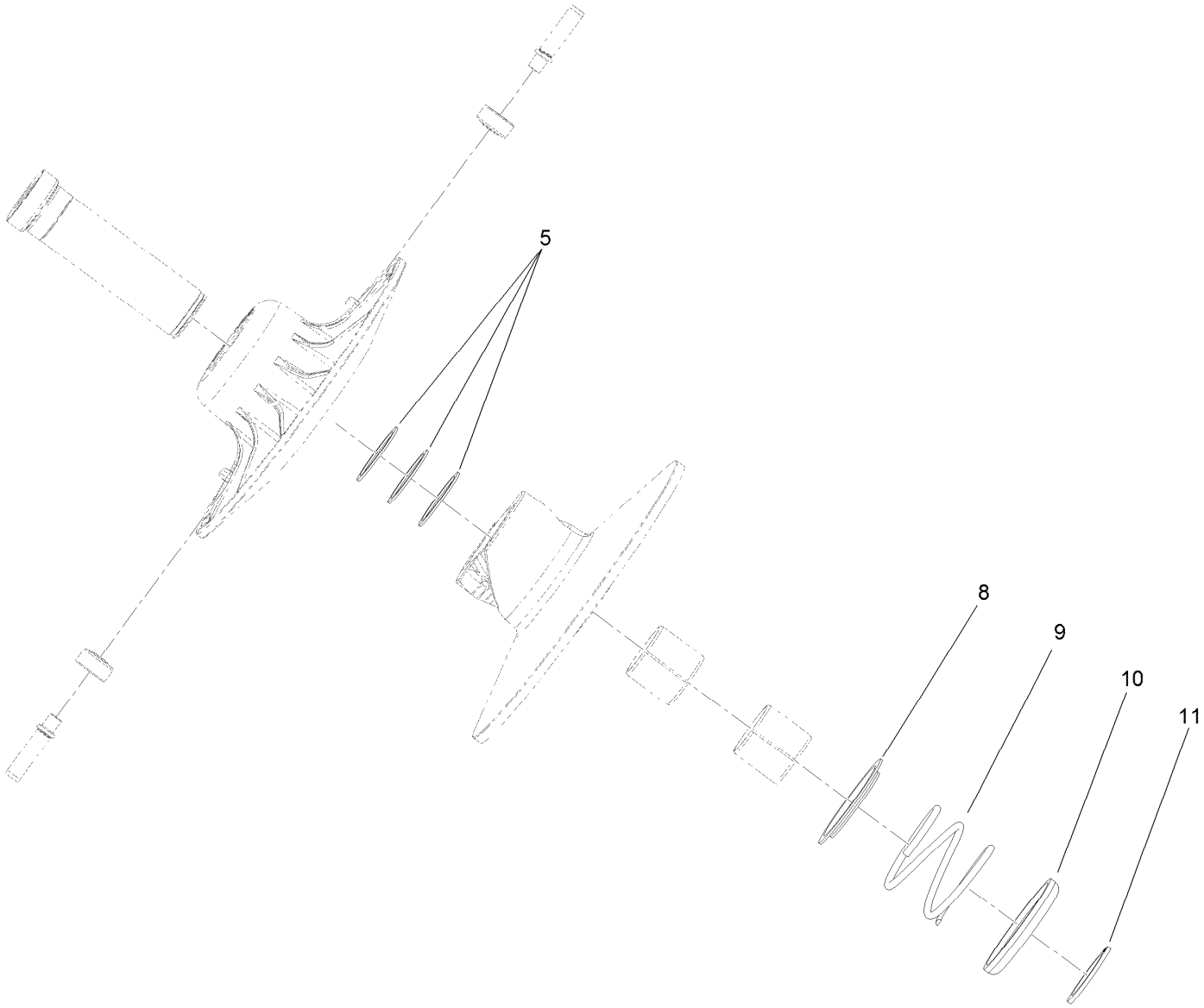

Secondary Clutch Assembly No. 136-6289

Ref.	*Part Number*	*Qty.*	*Description*
5	119-6018	3	Shim-Thrust
8	119-0809	1	Cup-Spring Retainer, Inner
9	119-9360	1	Spring-Compression, Black/Almond
10	119-0810	1	Cup-Spring Retainer, Outer
11	119-0811	1	Ring-Retaining

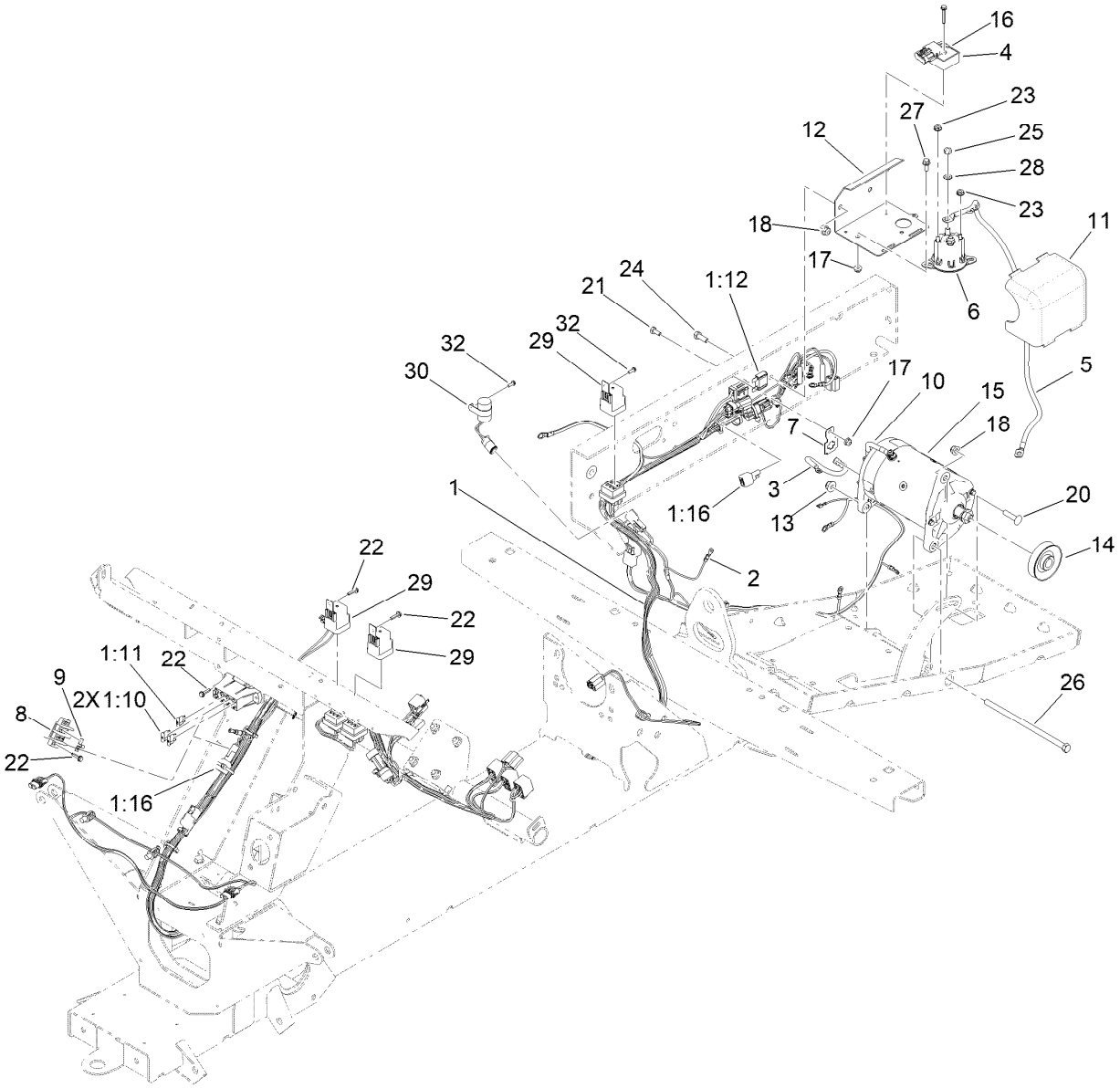

Electrical Assembly

Ref.	Part Number	Qty.	Description
1	122-2484	1	Harness-Wire, Main
1:10	218-578	2	Fuse-Blade, 10 Amp
1:11	109101	1	Fuse-Blade, 20 Amp
1:12	114-3342	1	Fuse-Maxi, 60 Amp
1:16	100-4918	2	Diode
2	122-1140	1	Harness-Wire, Engine
3	94-2777	1	Wire-Ground
4	119-9492	1	Regulator-Voltage
5	112-3537	1	Cable-Battery, Positive
6	114-3315	1	Solenoid
7	114-5502	1	Clip-Fuse
8	42862	1	Block-Terminal, Ground
9	42863	1	Strip-Jumper
10	122-1176	1	Cable-Battery, Negative
11	112-3027	1	Cover-Controller
12	145-2281-03	1	Mount-Solenoid
13	104-8301	1	Nut-HF, NI

Ref.	Part Number	Qty.	Description
14	121-6277	1	Pulley-Drive
15	131-8444	1	Starter/Generator ASM
16	100-4352	1	Screw-HWH
17	104-7201	3	Nut-HF, NI
18	104-8300	3	Nut-HF, NI
20	112-6950	1	Screw-CARR
21	321-3	1	Screw-HH
22	100-4351	6	Screw-HWH
23	32149-8	2	Nut-Keps
24	322-4	2	Screw-HH
25	3220-2	2	Nut-Jam
26	323-30	1	Screw-HH
27	3234-33	2	Screw-HHF
28	3255-8	2	Washer-Lock
29	99-7430	3	Relay-Mini
30	122-1128	1	Module-Delay, Timer
32	32144-87	2	Screw-HWHTF

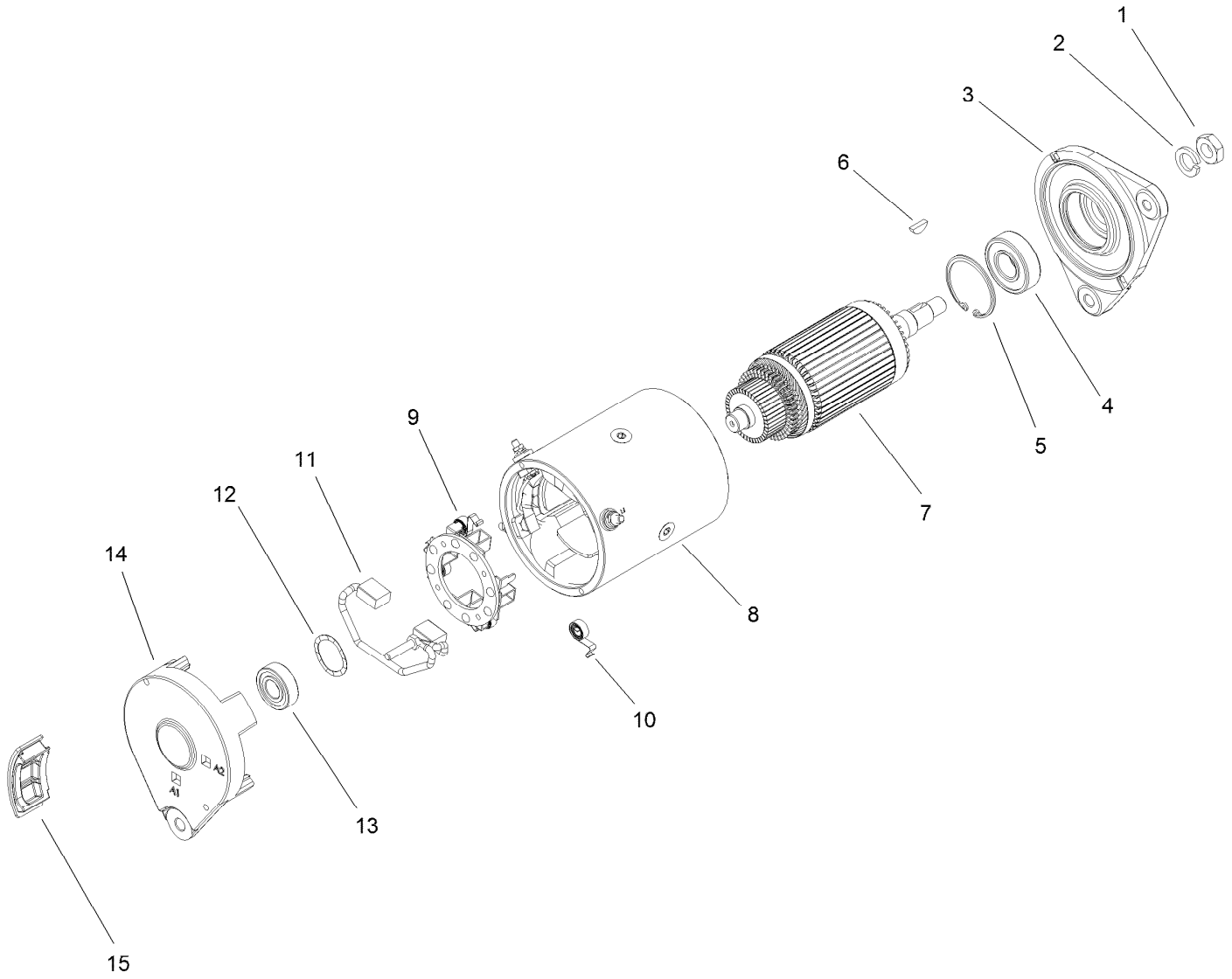

Starter Generator Assembly No. 131-8444

Ref.	*Part Number*	*Qty.*	*Description*
1	119-9651	1	Nut
2	119-9652	1	Washer-Lock
3	133-0599	1	Head-Drive End
4	119-9655	1	Bearing
5	119-9656	1	Ring-Retaining
6	119-9657	1	Key-Woodruff
7	119-9658	1	Armature ASM
8		1	Frame And Field Assembly ●
9	119-9661	1	Brush Box ASM
10	119-9660	4	Spring-Brush
11	119-9659	1	Brush Lead And Terminal Service Kit
12	119-9662	1	Washer-Wave
13	119-9663	1	Bearing
14		1	Head-End, Cummutator ●
15	133-0600	4	Plug-Rubber

● Not serviced separately

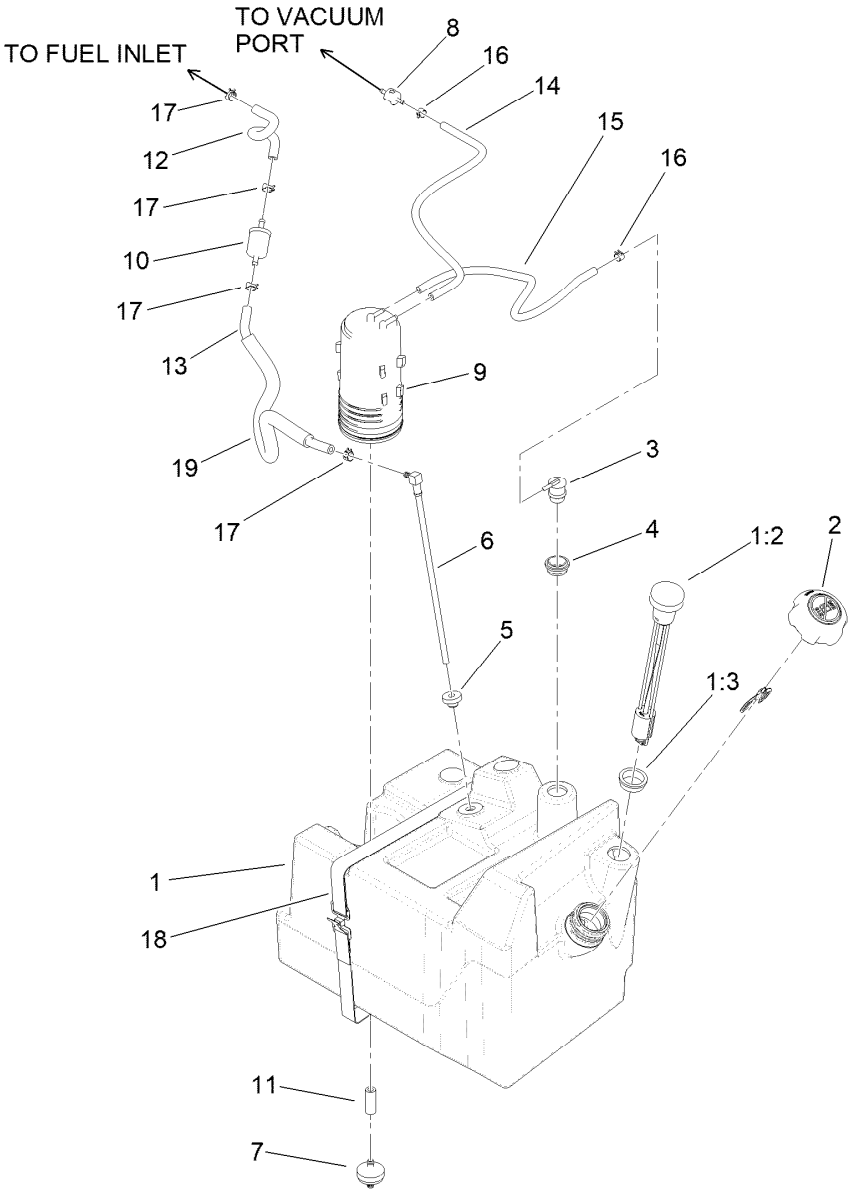

Fuel Tank Assembly

Ref.	Part Number	Qty.	Description
1	121-9769	1	Fuel Tank ASM
1:2	145-2298	1	Gauge-Fuel
1:3	95-8972	1	Grommet
2	137-4127	1	Cap-Fuel
3	114-0285	1	Valve-Rollover
4	114-0284	1	Grommet
5	46-6560	1	Bushing
6	99-7264	1	Pipe-Stand
7	115-7854	1	Filter-Fuel, Inline
8	133-8499	1	Valve-Check, Vacuum
9	117-1221	1	Canister-Carbon, 800Cc
10	94-2690	1	Filter-Fuel
11	106-5317	1	Hose-Fuel
12	109-0303	1	Hose-Fuel
13	110-4103	1	Hose-Fuel
14	75-4701	1	Hose-Fuel
15	110-8751	1	Hose-Fuel
16	2412-146	2	Clamp-Hose
17	2412-98	4	Clamp-Hose
18	3339-175	1	Strapping-Web
19	99-7129	1	Conduit-Line, Fuel

Attachments and Accessories

For 07235 Workman MDX Utility Vehicle

Product Name	Model/Part
Hose Reel Mounting Kit	07027
Trash Can Mounting Kit	07028
Brush Guard Kit	07145
Front Hitch Kit, Workman GTX Series Utility Vehicles with Brush Guard	07146
Front Hitch Kit, Workman GTX or MDX Series Utility Vehicles without Brush Guard	07147
Roll-Over Protection System	07276
Receiver Hitch Kit	07278
Cab Kit	07320
Canopy Kit	07324
Solid Windshield Kit	07325
Folding Windshield Kit	07326
Door Kit with Sliding Window	07356
Electric Bed Lift Kit, 2014 and After Workman MD/MDX/MDX-D Utility Vehicle	07389
Tire-AT 489, 24x10.5-10	104-7061
Tire-AT 489, 22x9.5-10	104-7062
Wireless Hourmeter	115-4754
Lift Wire Harness Kit	115-7823
Backup Alarm Kit	115-7824
Horn Kit	115-7825
External Antenna Kit, Wireless Hourmeter System	115-9524
Base Station Kit, Wireless Hourmeter System	115-9542
Repeater Kit, Wireless Hourmeter System	115-9543
Shim-Limiter	119-0807
Side Mirror Kit	119-9546
Stake Pocket Adapter Kit, 2011 and After Workman MD Series Utility Vehicle	119-9604
Tie-Down Kit, 2011 and After Workman MD Series Utility Vehicle	119-9605
Battery Kit	119-9680
Road Light and Homologation Kit	120-5031
Cargo Bed Installation Kit with Manual Dump, 2011 to 2013 Workman MD Series Utility Vehicle	127-7385
Cargo Bed Installation Kit with Electric Lift, 2011 to 2013 Workman MD Series Utility Vehicle	127-7386
Tire (22 X 9.50-10) 4-PLY	127-7435
Exterior Mirror Kit	130-5448
Interior Mirror Kit	130-5449
Beacon Kit	130-5484
Work Light Kit	130-5485
Windshield Washer Fluid Kit, 2015 and after Workman MD/HD Series Utility Vehicle	130-5615
Hitch ASM	131-3462
Tire (24 X 12.00-10) 4P K506	131-6667
Small Seat Cover	131-6690
Power Point Kit	131-8550
Spanner Wrench	132-5069
LED Worklight Kit	133-0554
ROPS Beacon Kit	133-0609
Front Spring Kit, 2016 and After MDX or MDX-D Series Utility Vehicle	133-0630

Attachments and Accessories (continued)

Service Hood ASM 133-7209
Aggressive Tire Kit, Workman MDX Series Utility Vehicle 136-1135
Door Mount Mirror Kit..... 136-1997
Wireless Hour Meter Finish Kit..... 138-5698
Brake and Signal LED Light Kit, Workman MD Series Utility Vehicle 145-2082
LED Homologation Lamp Kit..... 147-2798
MVP Filter Kit, Mid-Duty Workman Utility Vehicle..... 30004
Spark Arrestor Screen 94-8157

Notes:

Notes:



Count on it.