FORM NO. 3311-908

TORO®

21" H.P. MODEL NO. 18005 – 2000001 & UP
21" S.P. MODEL NO. 18010 – 2000001 & UP

PARTS CATALOG

21" H.P. AND S.P. FINGERTIP START 3 IN 1 DELUXE

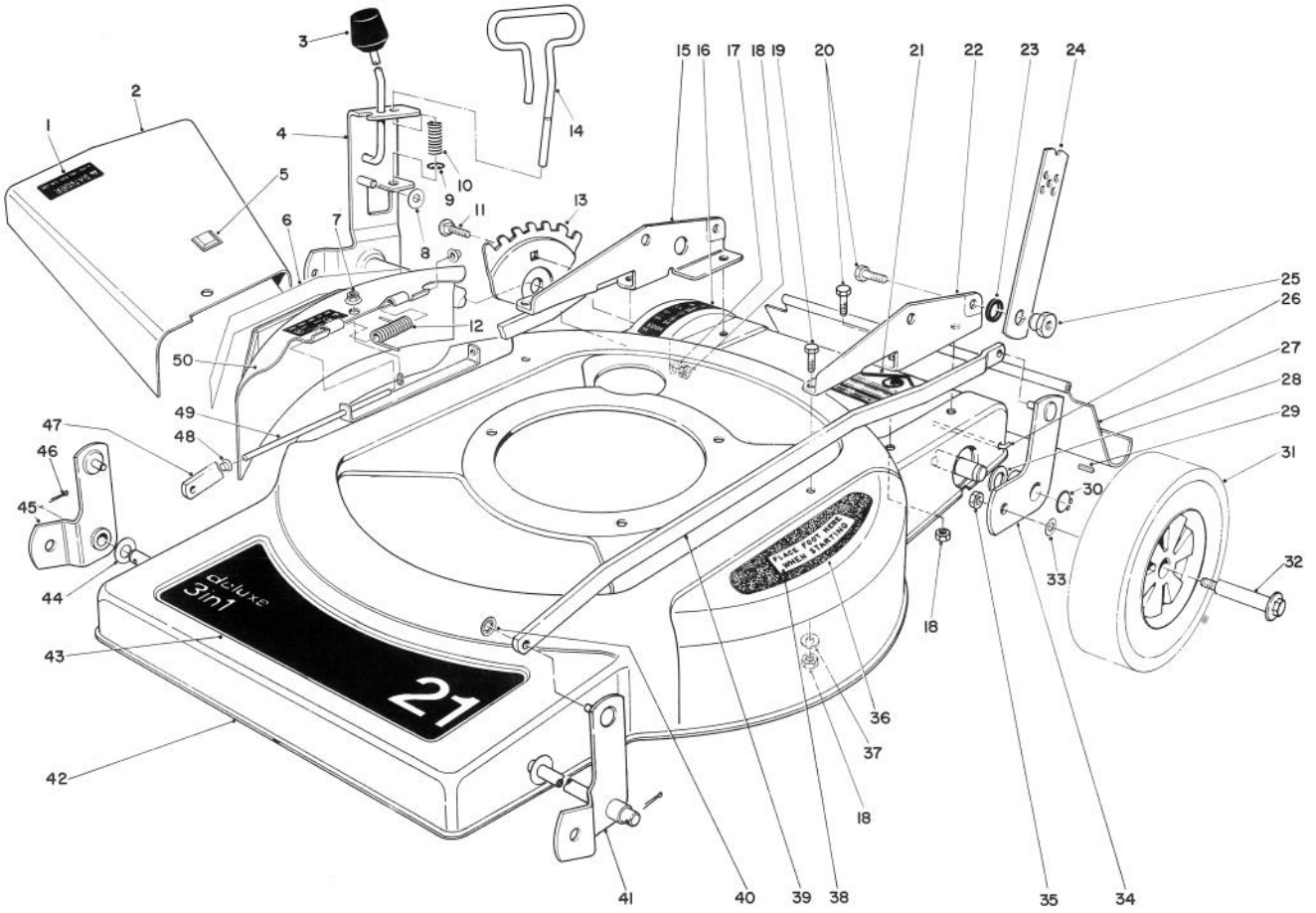

HOUSING ASSEMBLY MODEL 18005

Ref. No.	Part No.	Description	No. Used
1	42-1390	Decal – Danger	2
2	11-1639	Deflector – Grass (Incl. Ref. #1 & 5)	1
3	233-37	Knob	1
4	43-8500	Pivot Arm	1
5	237-134	Bumper	1
6	42-1300	Decal – Cover	1
7	32128-30	Flange Nut	1
8	3256-22	Washer	1
9	32120-18	Retaining Ring	1
10	38-2340	Spring	1
11	37-7190	Carriage Bolt	1
12	42-2990	Spring	1
13	36-0010	Adjustment Plate	1
14	38-2350	Stop Rod	1

Ref. No.	Part No.	Description	No. Used
15	38-2260	Handle Bracket R.H.	1
16	36-0030	Decal – Height of Cut	1
17	3256-23	Washer	1
18	32152-1	Locknut	7
19	322-6	Capscrew	2
20	322-2	Capscrew	6
21	39-5770	Decal – Danger	1
22	38-2250	Handle Bracket L.H.	1
23	27-6510	Spacer – Handle Latch	2
24	27-7080	Handle Latch	2
25	27-6520	Nut – Handle Pivot	2
26	33-3204	Rod – Shield	1
27	33-5560	Shield	1
28	3256-27	Washer	1
29	10-8040	Square Key	1

COPYRIGHT © ALL RIGHTS RESERVED
The Toro Company – 1982
MINNEAPOLIS, MN 55420 – U.S.A.

PRICE $1.00

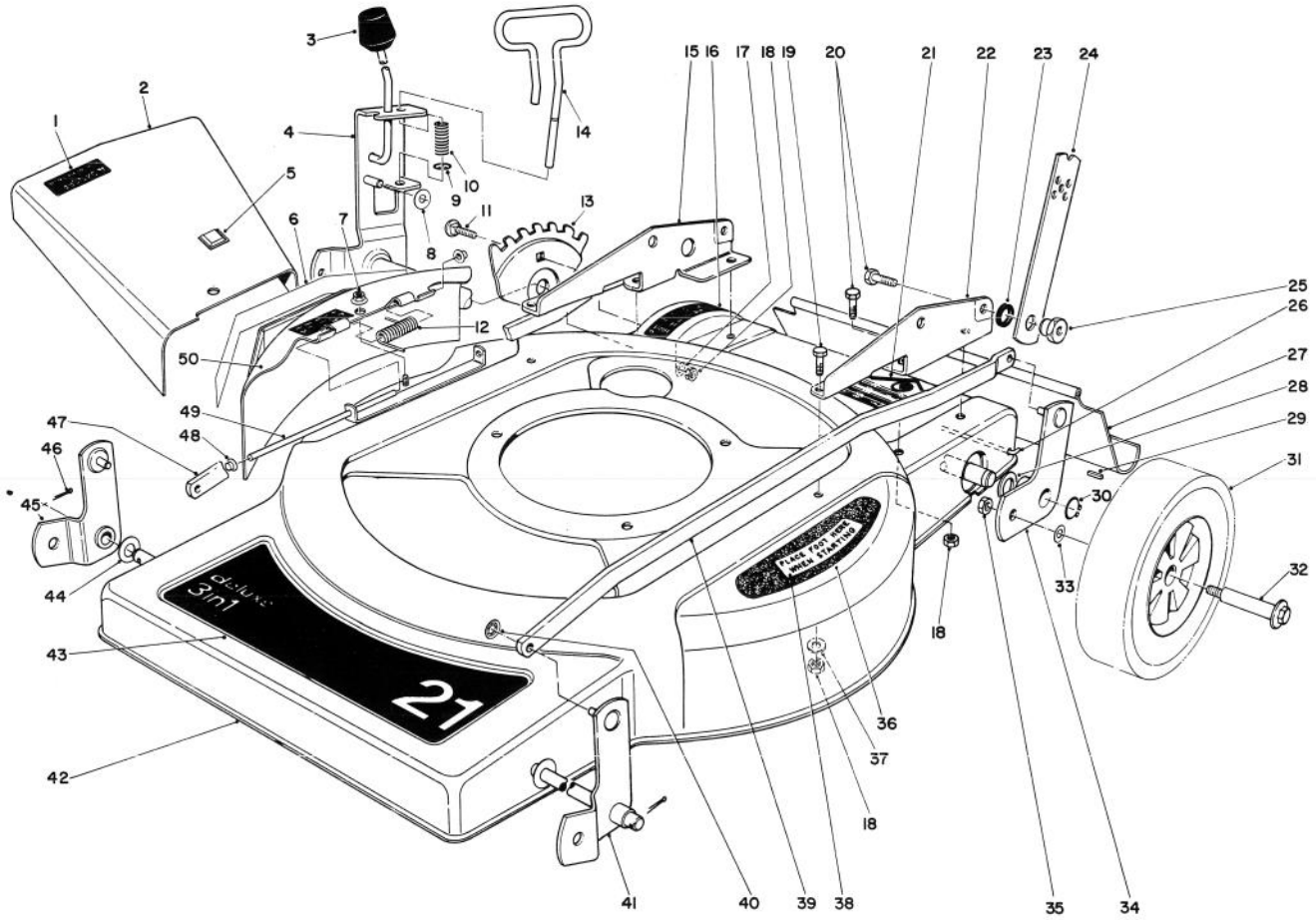

HOUSING ASSEMBLY MODEL 18005 (Continued)

Ref. No.	Part No.	Description	No. Used
30	32151-62	Retaining Ring	1
31	27-6200	Wheel & Tire Assembly	4
32	27-6230	Wheel Bolt	4
33	40-1940	Washer	4
34	38-7390	Pivot Arm	1
35	32146-6	Locknut	4
36	36-0410	Step Pad	1
37	3256-2	Washer	2
38	36-2820	Decal – Step Pad	1
39	36-5060	Spanner Link L.H.	1
40	32112-6	Retainer – Push On	4
41	38-2320	Pivot Arm	1

Ref. No.	Part No.	Description	No. Used
42	11-2769	Housing (Incl. Ref. #16, 21, 36 & 38)	1
43	44-0480	Decal Deck	1
44	23-1120	Washer	2
45	38-2330	Pivot Arm	1
46	3272-11	Cotter Pin	2
47	36-0370	Spanner Link R.H.	1
48	32112-1	Push Nut	2
49	36-6350	Pivot Rod – Deflector	1
50	11-2899	Mulcher Cover (Incl. Ref. #1)	1
*	11-2269	Loose Parts	1

*Not Illustrated

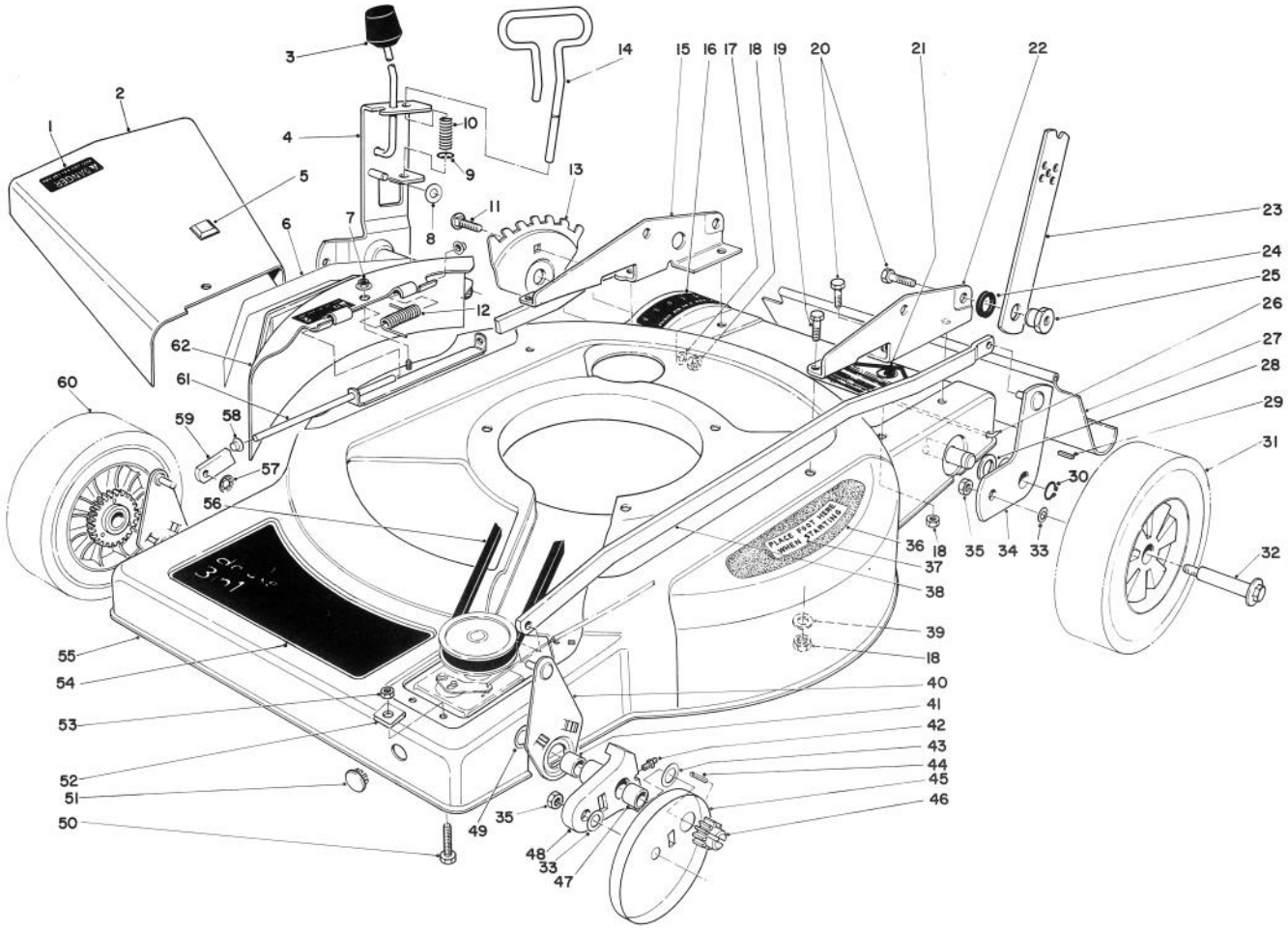

HOUSING ASSEMBLY MODEL 18010

Ref. No.	Part No.	Description	No. Used
1	42-1390	Decal – Danger	2
2	11-1639	Deflector – Grass (Incl. Ref. #1 & 5)	1
3	233-37	Knob	1
4	43-8500	Pivot Arm	1
5	237-134	Bumper	1
6	42-1300	Decal – Cover	1
7	32128-30	Flange Nut	1
8	3256-22	Washer	1
9	32120-18	Retaining Ring	1
10	38-2340	Spring	1
11	37-7190	Carriage Bolt	1
12	42-2990	Spring	1
13	36-0010	Adjustment Plate	1
14	38-2350	Stop Rod	1
15	38-2260	Handle Bracket R.H.	1
16	36-0030	Decal – Height of Cut	1
17	3256-23	Washer	1
18	32152-1	Locknut	7
19	322-6	Capscrew	2
20	322-2	Capscrew	6
21	39-5770	Decal – Danger	1
22	38-2250	Handle Bracket L.H.	1

Ref. No.	Part No.	Description	No. Used
23	27-7080	Handle Latch	2
24	27-6510	Spacer – Handle Latch	2
25	27-6520	Nut – Handle Pivot	2
26	33-3204	Rod – Shield	1
27	33-5560	Shield	1
28	3256-27	Washer	1
29	10-8040	Square Key	1
30	32151-62	Retaining Ring	1
31	27-6200	Wheel & Tire Assembly	2
32	27-6230	Wheel Bolt	4
33	40-1940	Washer	4
34	38-7390	Pivot Arm	1
35	32146-6	Locknut	4
36	36-0410	Step Pad	1
37	36-2820	Decal – Step Pad	1
38	36-5060	Spanner Link L.H.	1
39	3256-2	Washer	2
40	36-2620	Link – Pivot Arm	2
41	256-206	Bushing	2
42	302-18	Grease Fitting	2
43	18-9810	Thrust Washer	2
44	32121-98	Coil Pin	2
45	18-9820	Wheel Cover	2

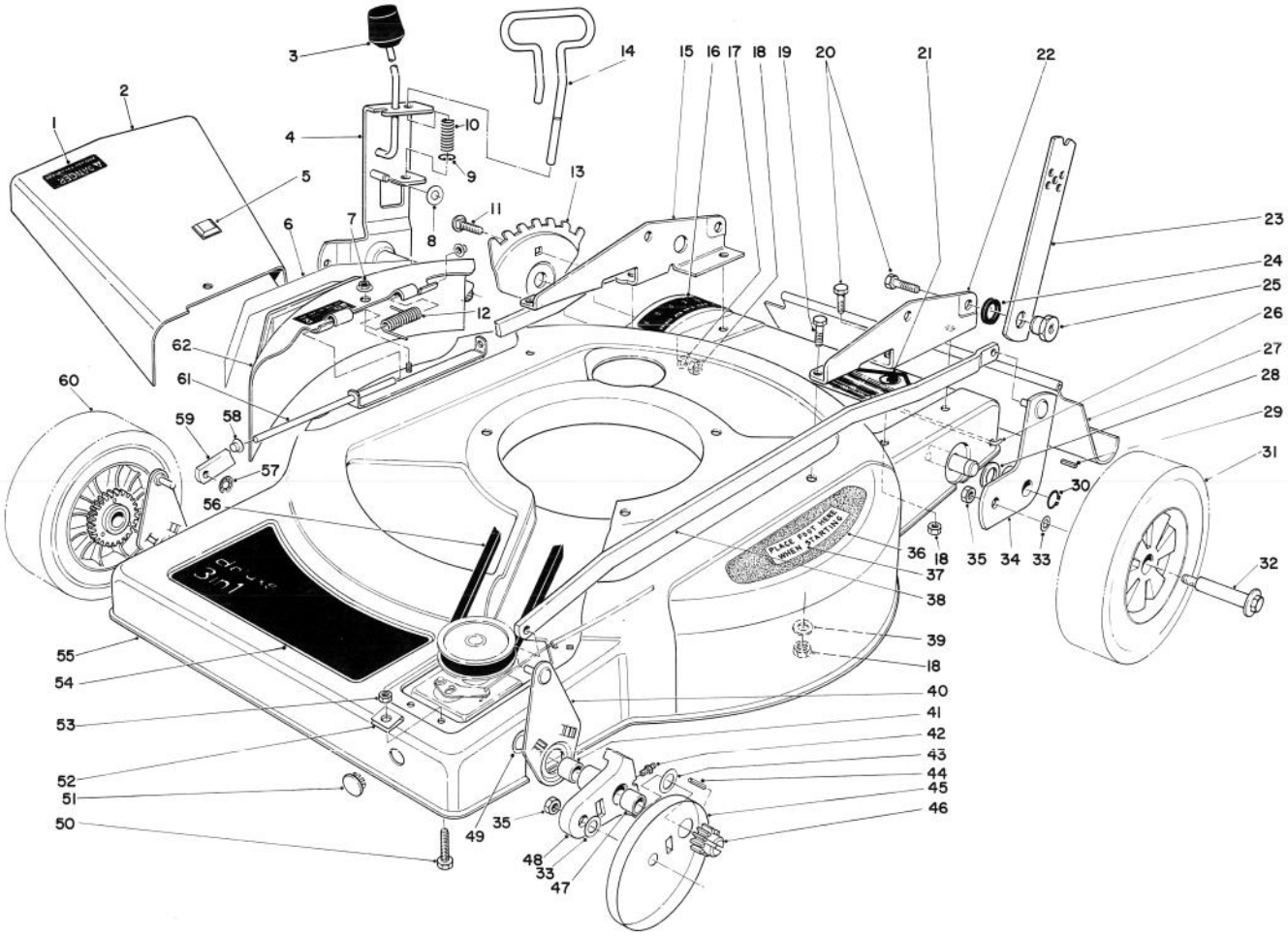

HOUSING ASSEMBLY MODEL 18010 (Continued)

Ref. No.	Part No.	Description	No. Used
46	18-9690	Pinion Gear	2
47	256-1	Bushing	2
48	38-2220	Pivot Arm Assembly (Incl. Ref. #41, 42 & 47)	2
49	32112-8	Retainer Push On	2
50	3-7281	Screw	1
51	2410-52	Plug – Hole	1
52	37-7370	Speed Nut	2
53	3218-1	Jam Nut	1
54	44-0490	Decal – Deck	1

Ref. No.	Part No.	Description	No. Used
55	11-2759	Housing (Incl. Ref. #16, 21 & 36-37)	1
56	5-4505	V-Belt	1
57	32112-6	Retainer – Push On	4
58	32112-1	Push Nut	2
59	36-0370	Spanner Link R.H.	1
60	11-1419	Wheel & Gear Tire Assembly	2
61	36-6350	Pivot Rod – Deflector	1
62	40-9970	Mulcher Cover	1
*	11-2259	Loose Parts	1

*Not Illustrated

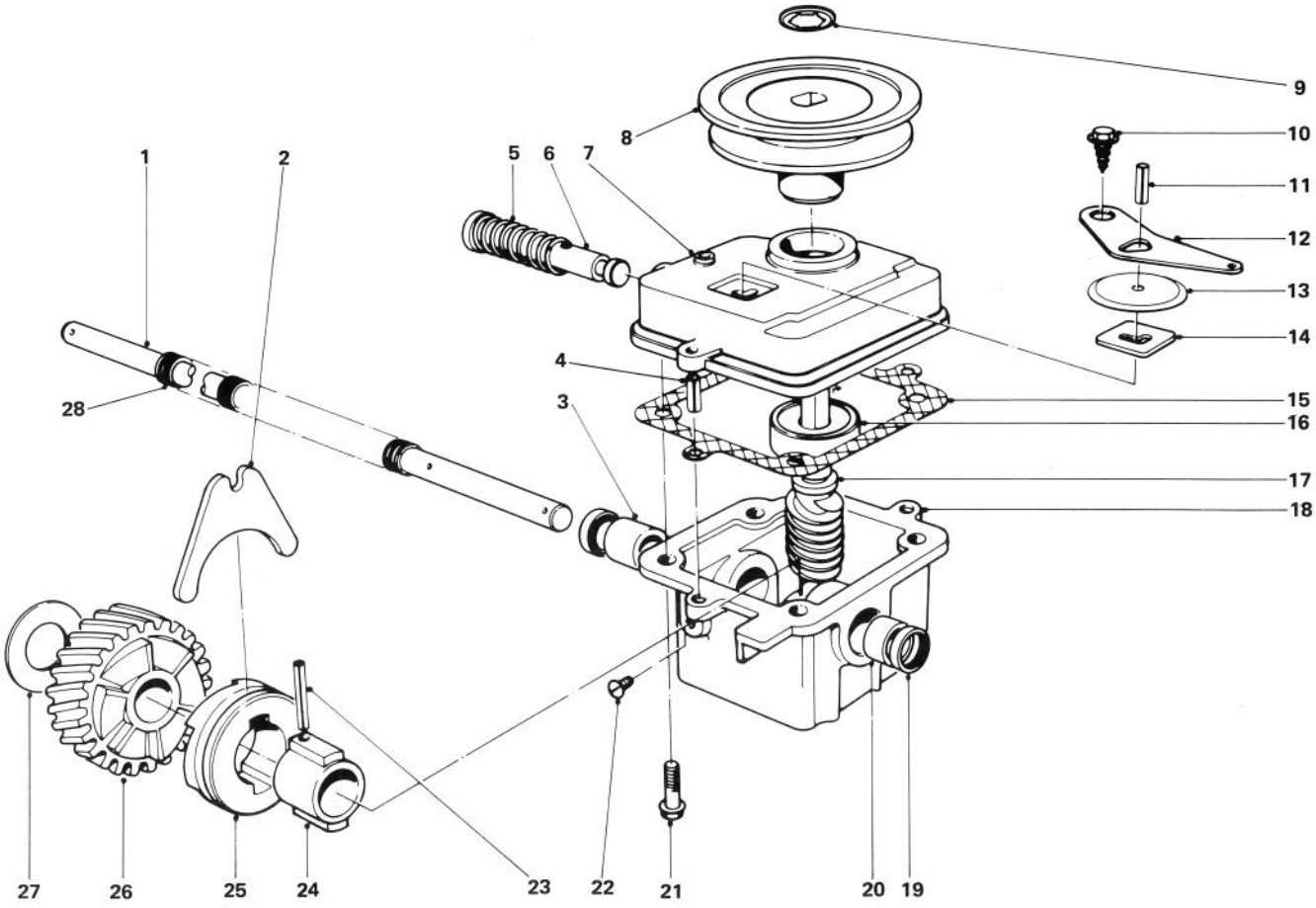

GEAR CASE ASSEMBLY MODEL 18010

Ref. No.	Part No.	Description	No. Used
1	37-9440	Drive Shaft	1
2	5-3247	Shifter Fork	1
3	256-263	Bushing	1
4	32121-1	Roll Pin	2
5	3-0731	Spring	1
6	5-3248	Shifter Rod	1
7	39-1100	Cover – Gear Case	1
8	20-2780	Pulley	1
9	3290-346	Retainer – Push On	1
10	32140-64	Self-Tapping Screw	1
11	32121-23	Roll Pin	1
12	5-3252	Shifter Arm	1
13	3-2615	Dust Cover	1
14	3-0681	Latch Plate	1
15	36-1000	Gasket	1
16	251-284	Bearing	1

Ref. No.	Part No.	Description	No. Used
17		Shaft Worm	1
18	8-0479	Gear Case (Incl. Ref. #3, 19 & 20)	1
19	253-140	Oil Seal	2
20	256-110	Bushing	1
21	11-9760	Screw	4
22	28-1550	Nylon Screw	1
23	32121-88	Coil Pin	1
24	3-0721	Sleeve	1
25	19-5660	Clutch Jaw	1
26		Helical Gear	1
27	3-0724	Thrust Washer	1
28	24-7920	Cover – Drive Shaft	1
*	8-5679	Worm Shaft & Gear Assembly (Incl. Ref. #17 & 26)	1
*	8-6879	Gear Case Assembly Complete	1

*Not Illustrated

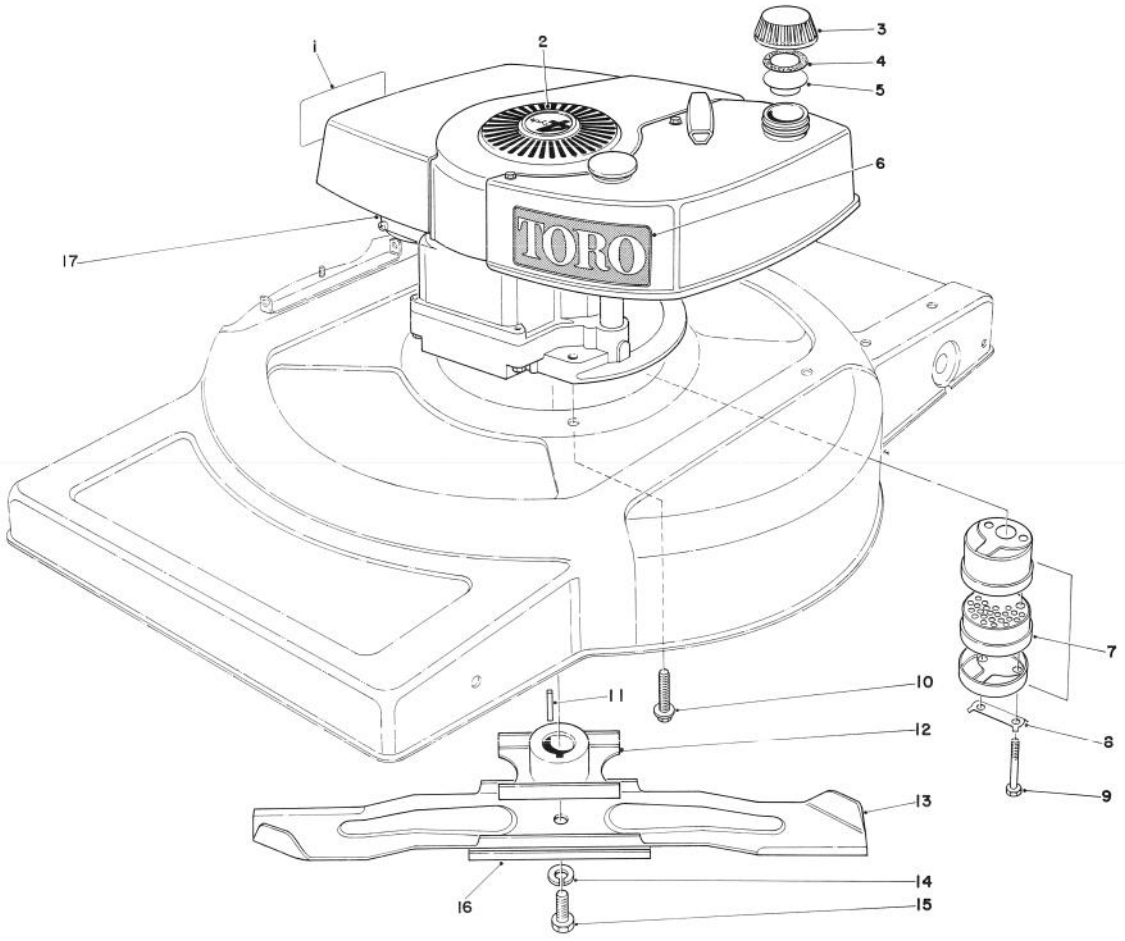

ENGINE ASSEMBLY MODEL 18005

Ref. No.	Part No.	Description	No. Used
1	37-1580	Decal — Maintenance	1
2	38-1480	Plug Button	1
3	27-7870	Gas Cap (Incl. Ref. #4 & 5)	1
4	2210-144	Gasket	1
5	2210-143	Baffle	1
6	44-0510	Decal — Engine	1
7	5-4769	Muffler Assembly (Incl. Ref. #8 & 9)	1
*	39-5930	Spark Arrestor Muffler Assembly (Optional)	1
8	3-5094	Locking Clip	1

Ref. No.	Part No.	Description	No. Used
9	321-20	Hex Head Screw	2
10	11-0590	Hex Head Thread Forming Capscrew	3
11	7-0036	Square Key	1
12	42-4240	Blade Retainer	1
13	26-0880	21" Blade	1
14	3253-22	Lockwasher	1
15	3-5246	Special Screw	1
16	46-2980	Stiffener — Blade	1
17	221-722	Engine	1

*Not Illustrated

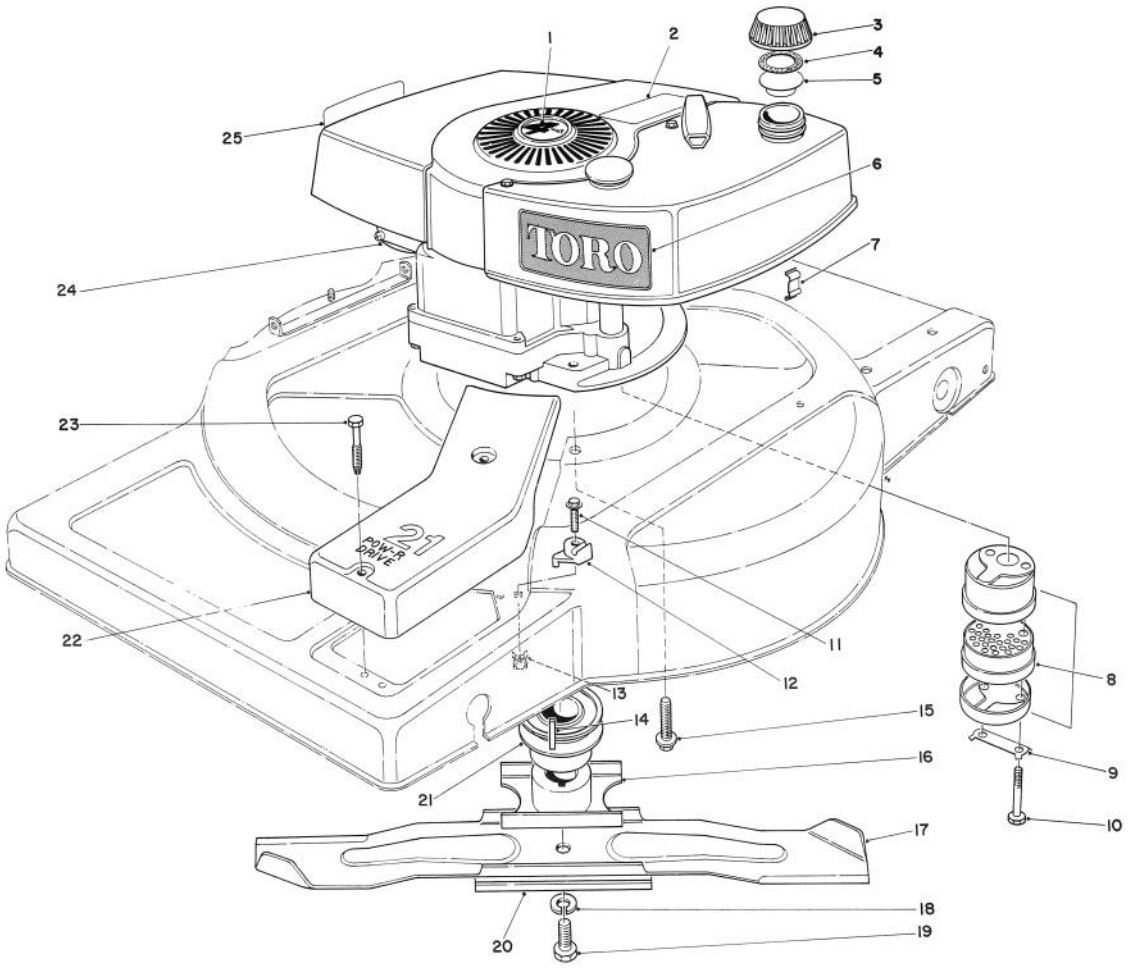

ENGINE ASSEMBLY MODEL 18010

Ref. No.	Part No.	Description	No. Used
1	38-1480	Plug Button	1
2	25-1050	Decal – F.T. Lockout	1
3	27-7870	Gas Cap (Incl. Ref. #4 & 5)	1
4	2210-144	Gasket	1
5	2210-143	BAffle	1
6	44-0510	Decal – Engine	1
7	2210-247	Clip – Conduit	1
8	5-4769	Muffler Assembly (Incl. Ref. #9 & 10)	1
*	39-5930	Spark Arrestor Muffler Assembly (Optional)	1
9	3-5094	Locking Clip	1
10	321-20	Hex Head Screw	2
11	32144-22	Thread Forming Screw	1
12	38-6400	Cable Boss	1

Ref. No.	Part No.	Description	No. Used
13	32115-2	Retained Nut	1
14	27-8590	Square Key	1
15	11-0590	Hex Head Thread Forming Capscrew	3
16	42-4240	Blade Retainer	1
17	26-0880	21" Blade	1
18	3253-22	Lockwasher	1
19	3-5246	Special Screw	1
20	46-2980	Stiffener – Blade	1
21	23-0130	Pulley – Driver	1
22	36-0390	Belt Cover	1
23	37-7260	Capscrew – Special	2
24	221-722	Engine	1
25	37-1580	Decal – Maintenance	1

*Not Illustrated

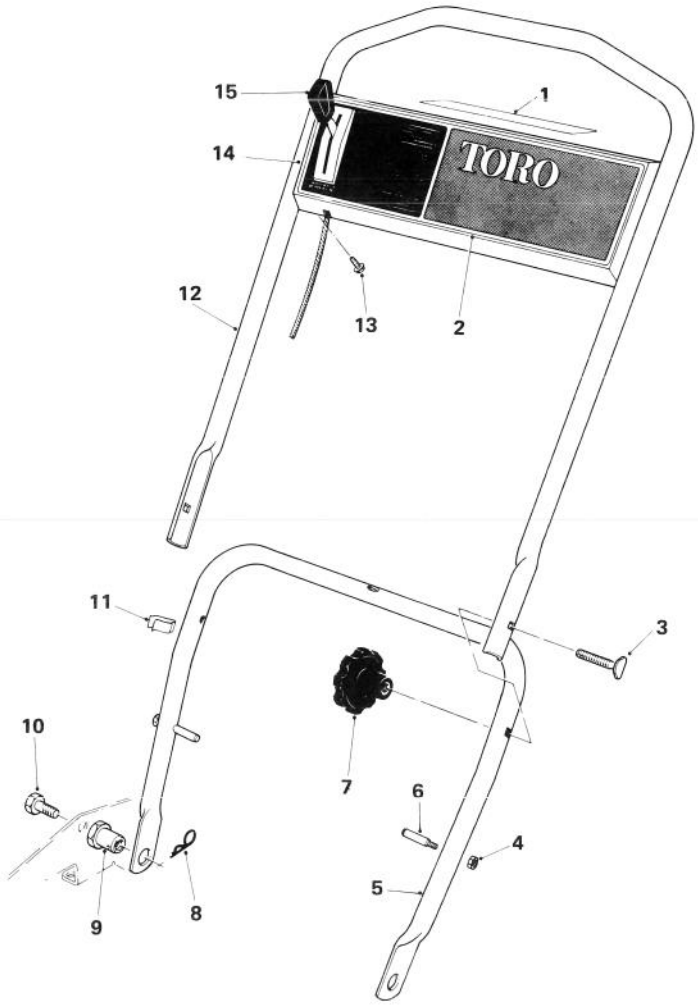

HANDLE ASSEMBLY MODEL 18005

Ref. No.	Part No.	Description	No. Used
1	40-4540	Decal — Instruction	1
2	42-1280	Decal — Control Plate	1
3	17-9420	Handle Screw	2
4†	32146-8	Locknut	2
5	44-0700	Handle — Lower	1
6†	17-9380	Handle Pin	2
7	19-4050	Handle Knob	2
8	3290-255	Hairpin — Cotter	2

Ref. No.	Part No.	Description	No. Used
9	12-2080	Nut — Handle Pivot	2
10	322-2	Capscrew	2
11	218-466	Clip — Conduit	1
12	36-0110	Handle — Upper	1
13	32104-76	Screw	4
14	39-6621	Control Plate	1
15	39-5870	Throttle Control	1

†Service Replacement Parts

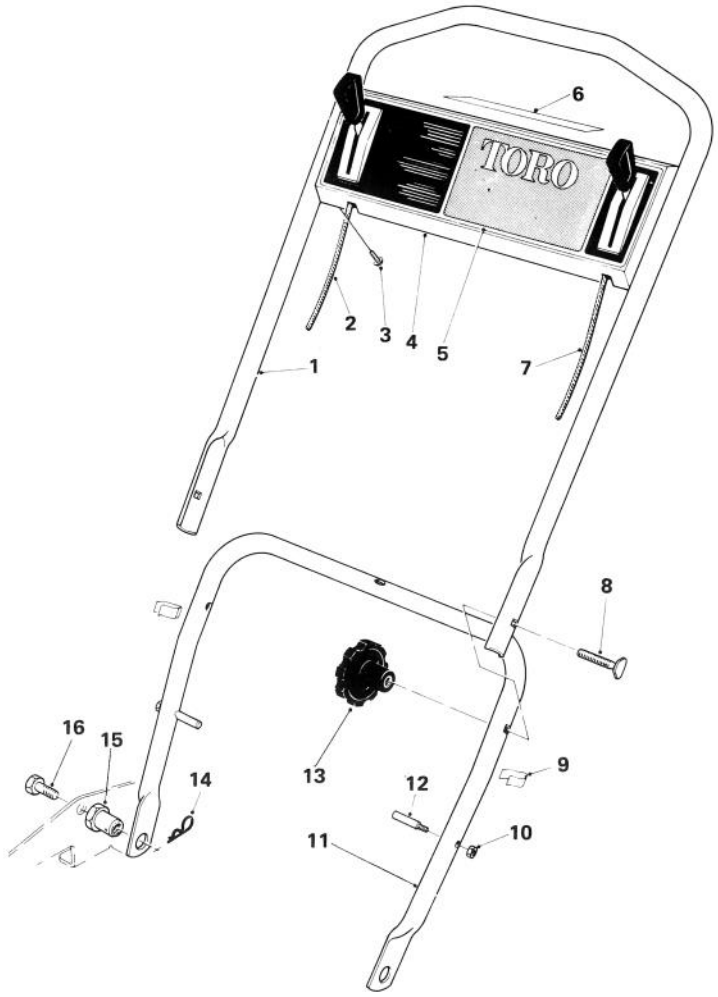

HANDLE ASSEMBLY MODEL 18010

Ref. No.	Part No.	Description	No. Used
1	36-0110	Handle – Upper	1
2	39-5870	Throttle Control	1
3	32104-76	Screw	4
4	11-1959	Control Plate (Incl. Ref. #5)	1
5	42-1290	Decal – Control Plate	1
6	40-4540	Decal – Instruction	1
7	39-5883	Traction Control	1
8	17-9420	Handle Screw	2

Ref. No.	Part No.	Description	No. Used
9	218-465	Clip – Conduit	2
10†	32146-8	Locknut	2
11	44-0700	Handle – Lower	1
12†	17-9380	Handle Pin	2
13	19-4050	Handle Knob	2
14	3290-255	Hairpin – Cotter	2
15	12-2080	Nut – Handle Pivot	2
16	322-2	Capscrew	2

†Service Replacement Parts

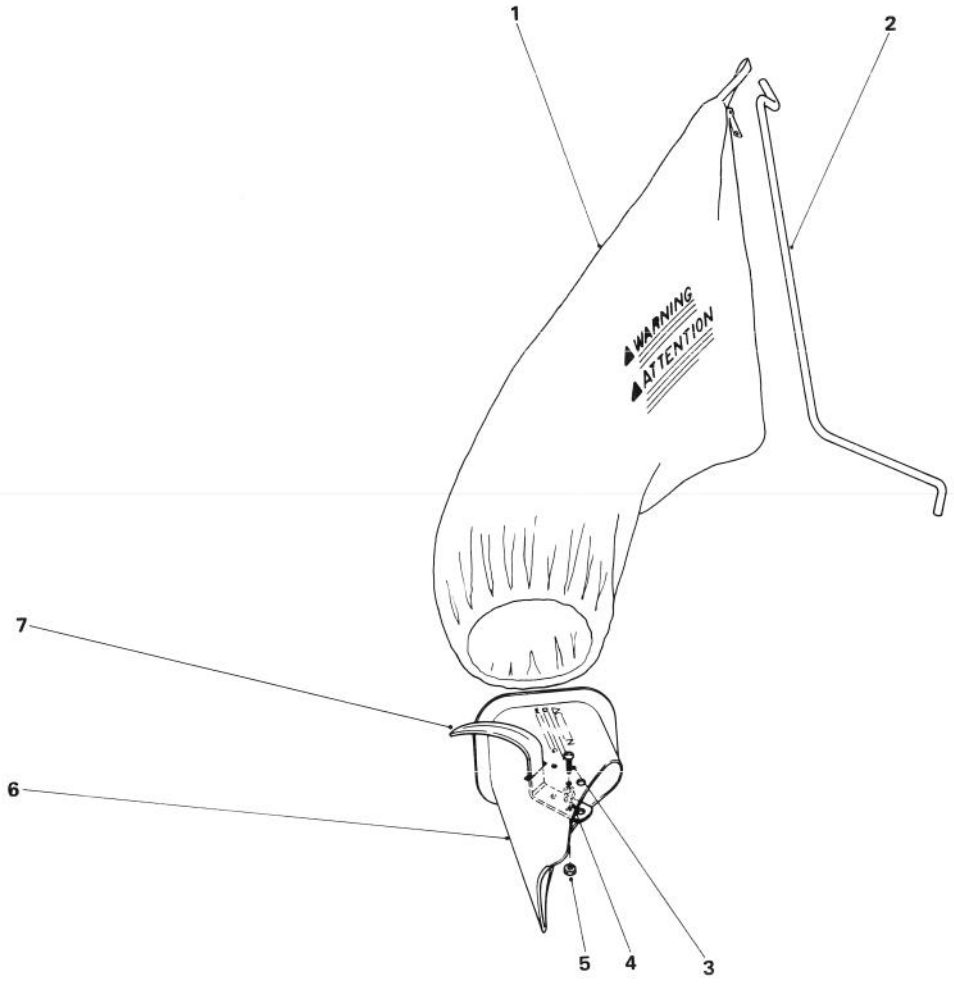

GRASS BAG KIT NO. 8-9789 (Optional)

Ref. No.	Part No.	Description	No. Used
1	6-0929	Grass Bag	1
2	19-4210	Rod – Bag Hanger	1
3	32122-32	Truss Hd. Machine Screw	2
4	3256-49	Washer	3

Ref. No.	Part No.	Description	No. Used
5	32153-1	Locknut	2
6	42-1411	Grass Chute (Incl. Ref. #3-5 & 7)	1
7	42-1340	Handle – Grass Chute	1

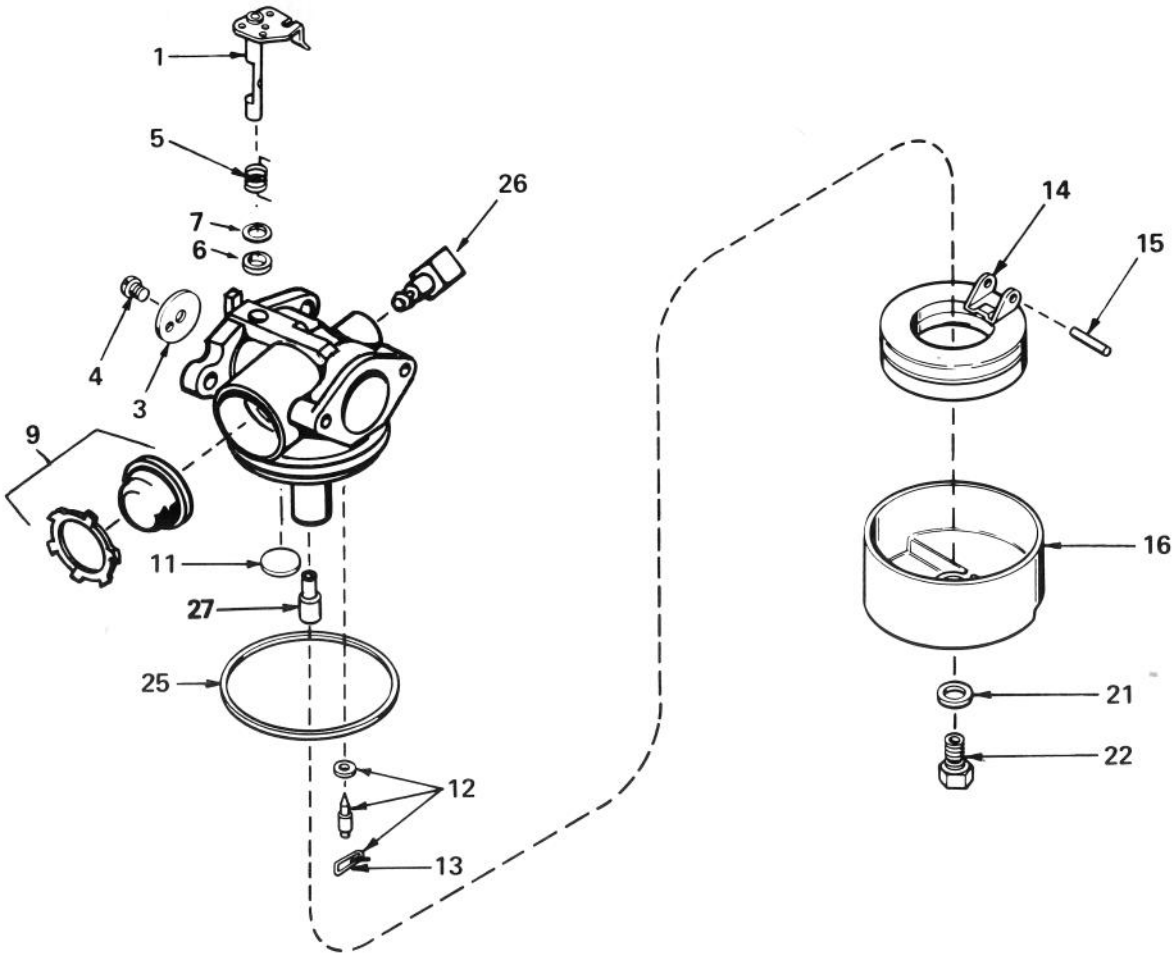

CARBURETOR NO. 632050A

Ref. No.	Part No.	Description	No. Used
1	631615	Shaft & Lever Assy., Throttle	1
3	631616	Shutter, Throttle	1
4	650506	Screw, Throttle Shutter	1
5	631767	Spring, Return	1
6	631971	Seal, Dust	1
7	631184	Washer, Flat	1
9	632047	Bulb & Retainer, Primer	1
11	631027	Plug, Welch	1
12	631021	Inlet Needle, Seat & Clip Assy. (Incl. Ref. #13)	1

Ref. No.	Part No.	Description	No. Used
13	631022	Clip, Inlet Needle	1
14	632019	Float, Carburetor	1
15	631024	Shaft, Float	1
16	631700	Bowl, Float	1
21	631334	Gasket, Bowl-to-Body	1
22	631935	Nut, Float Bowl	1
25	631028	Gasket, Bowl-to-Body	1
26	631807	Fitting, Fuel Inlet	1
27	632158	Spacer	1

ENGINE TECUMSEH MODEL NO. TNT 100-10081D

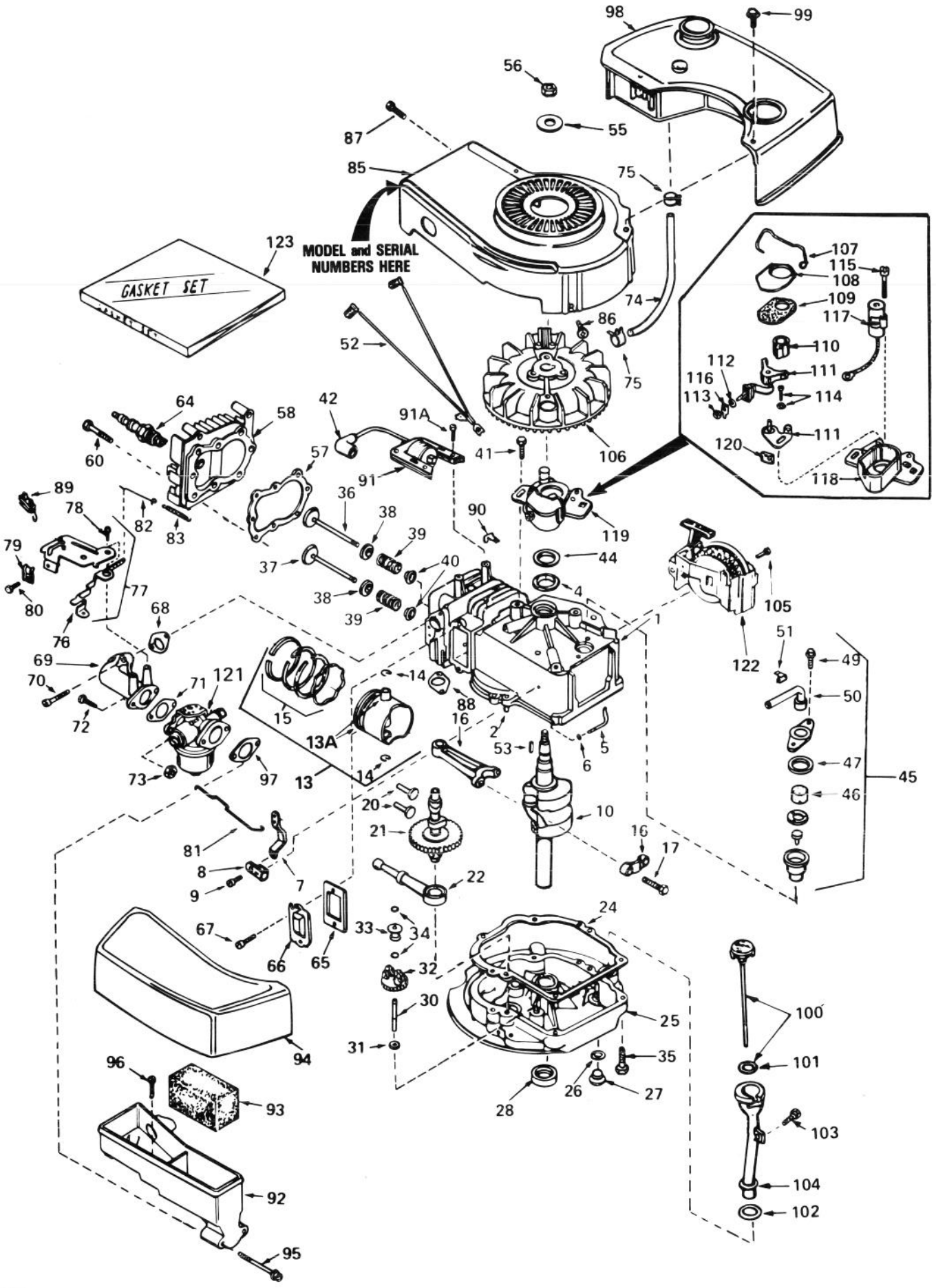

ENGINE TECUMSEH MODEL NO. TNT 100-10081D

Ref. No.	Part No.	Description	No. Used
1	34429	Cylinder Assy. (Incl. Ref. #2, 4 & 105)	1
2	26727	Pin, Dowel	2
4	32600	Seal, Oil	1
5	30589	Rod, Governor (Incl. Ref. #6)	1
6	28277	Washer, Flat	1
7	32651	Lever, Governor	1
8	31335	Clamp, Governor Lever	1
9	650548	Screw, Hex Washer Hd.	1
10	34430	Crankshaft	1
13	34851	Piston, Pin & Ring Assy. (Std.) (Incl. Ref. #13A, 14 & 15)	1
13	34852	Piston, Pin & Ring Assy. (.010 Oversize) (Incl. Ref. #13A, 14 & 15)	1
13	34853	Piston, Pin & Ring Assy. (.020 Oversize) (Incl. Ref. #13A, 14 & 15)	1
13A	32603B	Piston & Pin Assy. (Std.) (Incl. Ref. #14)	1
13A	32604B	Piston & Pin Assy. (.010 Oversize) (Incl. Ref. #14)	1
13A	32605B	Piston & Pin Assy. (.020 Oversize) (Incl. Ref. #14)	1
14	20381	Ring, Piston Pin Retaining	2
15	34854	Ring Set, Piston (Std.)	1
15	34855	Ring Set, Piston (.010 Oversize)	1
15	34856	Ring Set, Piston (.020 Oversize)	1
16	30963B	Rod Assy., Connecting (Incl. Ref. #17)	1
17	32610A	Bolt, Connecting Rod	2
20	27241	Lifter, Valve	2
21	33553	Camshaft (Mech. Compression Release)	1
22	29914	Pump Assy., Oil	1
24	*26750A	Gasket, Mounting Flange	1
25	30594B	Flange Assy., Mounting (Incl. Ref. #26 thru 30)	1
26	*28833	Gasket, Oil Drain Plug	1
27	27244	Plug, Oil Drain	1
28	26208	Seal, Oil	1
30	30574	Shaft, Mechanical Governor	1
31	30590A	Washer, Flat	1
32	30591	Gear Assy., Governor (Incl. Ref. #31)	1
33	30588A	Spool, Governor	1
34	29193	Ring, Retaining	2
35	650488	Screw, Hex Hd.	6
36	29314B	Valve, Intake	1
36	29315C	Valve, Intake (1/32" Oversize) (Incl. Ref. #40)	1
37	29313C	Valve, Exhaust (Std.) (Incl. Ref. #40)	1
37	29315C	Valve, Exhaust (1/32" Oversize) (Incl. Ref. #40)	1
38	31671	Cap, Upper Valve Spring	2
39	31672	Spring, Valve	2
40	31673	Cap, Lower Valve Spring	2
41	650489	Screw, Hex Hd.	2
42	610118	Cover, Spark Plug	1
44	33876	Gasket, Stator	1
45	34214A	Breather Assy. (Incl. Ref. #46 thru 51)	1
46	33734	Element, Breather	1
47	*33735	Gasket, Breather	1
49	30200	Screw, Hex Washer Hd. Self-Tap	2
50	33886	Tube, Breather	1
51	33887	Clip, Breather Tube	1
52	34432	Wire, Ground	1
53	610995	Key, Flywheel	1
55	650815	Washer	1
56	650816	Nut, Flywheel	1
57	*33015	Gasket, Cylinder Head	1
58	34342	Head, Cylinder	1
60	6021A	Screw, Hex Flange Hd.	8
64	33636	Plug, Spark (Champion J-8 or equivalent) Except for Canada	1
64	34251	Resistor Spark Plug (Canadian Regulations Require RJ-17LM Resistor Spark Plug) Canada	1
65	*27234	Gasket, Valve Spring Cover	1
66	32755	Cover, Valve Spring Box	1
67	650128	Screw, Fil. Hd.	2
68	*34690	Gasket, Intake Pipe	1
69	33004A	Pipe, Intake (Incl. Ref. #68)	1
70	650451	Screw, Hex Hd.	2
71	*31688	Gasket, Carburetor	1
72	6201	Screw, Hex Hd.	2
73	29752	Nut & Lockwasher Assy.	2
74	30705	Line, Fuel	1
75	26460	Clamp, Fuel Line	2
76	34310	Lever, Control	1
77	33889A	Control Assy., Speed (Incl. Ref. #76, 78 & 89)	1
78	650804	Screw, Hex Washer Hd. Shoulder Self-Tap	1
79	27793	Clip, Conduit	1
80	28942	Screw, Hex Washer Hd.	1
81	34336	Link, Governor-to-Throttle	1
82	33151	Link, Governor Spring	1
83	33890	Spring, Governor	1
85	33891A	Housing, Blower	1
86	650497	Screw, Flex Pan Hd.	2
87	30200	Screw, Hex Washer Hd. Self-Tap	2
88	*30081	Gasket, Exhaust	1
89	610973	Terminal Assy.	1
90	29443	Clip, Fuel Line	1
91	34431	Lamination & Coil Assy.	1
91A	650814	Screw, Hex Hd.	2
92	33895	Body, Air Cleaner	1
93	33896	Filter, Air Cleaner	1
94	33897	Cover, Air Cleaner	1
95	650762	Screw, Fil. Hd.	2
96	650784	Screw, Hex Hd. w/Flatwasher	1
97	*33051	Gasket, Air Cleaner	1
98	33904A	Tank, Fuel	1
99	28763	Screw, Hex Washer Hd.	2
100	33894A	Dipstick, Oil (Incl. Ref. #101) (Twist Lock)	1
101	33590	"O" Ring	1
102	34265	Gasket	1
103	650562	Screw, Hex Washer Hd.	1
104	34380	Tube, Oil Filler (Plastic)	1
105	650802	Screw, Hex Washer Hd.	2
106	611007	Flywheel	1
107	30551	Spring, Breaker Box Dust Cover	1
108	610947	Cover, Breaker Box Dust	1
109	610955	Gasket, Dust Cover	1
110	30992	Cam, Breaker	1
111	30547A	Breaker Assy.	1
112	610385	Washer, Terminal	1
113	610408	Nut, Terminal	1
114	29181	Screw & Washer Assy., Breaker	1
115	610593	Screw, Condenser Fastening	1
116	33356	Tab, Ground Terminal	1
117	30548B	Condenser	1
118	611008	Core & Plate Group	1
119	611006	Stator Assy. (Incl. Ref. #107, 111 thru 118 & 120)	1
120	30549	Felt, Cam Wiper	1
121	632050A	Carburetor (Incl. Ref. #71)	1
122	590531	Starter, Side Mount	1
123	33906A	Gasket Set (Incl. Items Marked *)	1

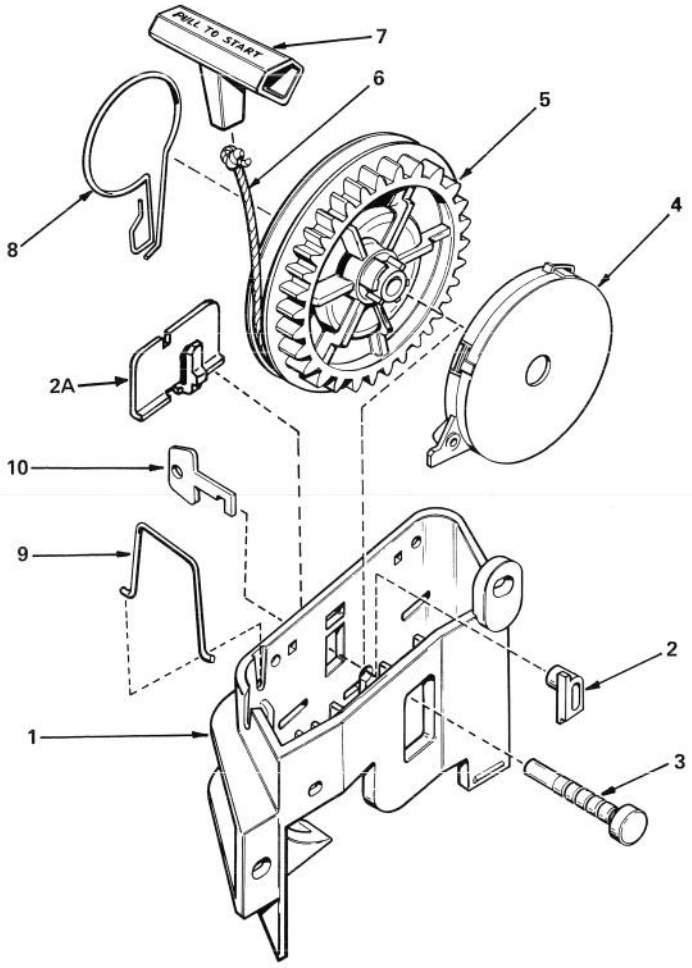

REWIND STARTER NO. 590531

Ref. No.	Part No.	Description	No. Used
1	590523	Bracket, Starter	1
2	590524	Pawl, Locking (Not Used On All Engine Models)	1
2A	590538	Clip, Starter Bracket (Used On Starters Not Equipped With Locking Pawl, Ref. #2)	1
3	590525	Pin, Pulley	1
4	590526	Spring Assy., Rewind (Incl. Ref. #3)	1

Ref. No.	Part No.	Description	No. Used
5	590522	Pulley	1
6	590527	Rope, Starter (Length 65" & 9/64" Dia.)	1
7	590452	Handle, Starter	1
8	590528	Brake	1
9	590529	Clip, Rope	1
10	590530	Key (Not Used On All Engine Models)	1

IDENTIFICATION AND ORDERING

MODEL AND SERIAL NUMBERS

The Mower has two identification numbers: a model number and a serial number. The two numbers are stamped on a decal which is located on the mower housing between the rear wheels. In any correspondence concerning the mower, supply model and serial numbers to assure that correct information and replacement parts are obtained.

To order replacement parts from an Authorized TORO Service Dealer, supply the following information:

1. Model and serial numbers of the mower.
2. Part number, description, and quantity of part(s) desired.

Note: Do not order by reference number if a parts catalog is being used; use the PART NUMBER.

The Toro Promise

A ONE YEAR LIMITED WARRANTY

The Toro Company promises to repair your TORO Product if defective in materials or workmanship. The following time periods from the date of purchase apply:

Residential Product . . . . . 1 Year
Residential Products Used Commercially . . . 45 Days

The costs of parts and labor are included, but the customer pays the transportation costs. Just return any residential product to an Authorized TORO Service Dealer or TORO Distributor.

Should you feel your TORO Product is defective and wish to rely on The Toro Promise, the following procedure is recommended:

1. Contact any Authorized TORO Service Dealer, TORO Master Service Dealer, or TORO Distributor (the Yellow Pages of your telephone directory is a good reference source).
2. He will either instruct you to return the product to him or recommend another Authorized TORO Service outlet which might be more convenient.
3. Bring the product along with your original sales slip, or other evidence of purchase date, to the service dealer.
4. The servicing dealer will inspect the unit, advise you whether the product is defective and, if so, make all repairs necessary to correct the defect without extra charge to you.

If for any reason you are dissatisfied with the dealer's analysis of the defect or the service performed, you may contact us.

Write:

TORO Consumer Service Department
8111 Lyndale Avenue South
Minneapolis, Minnesota 55420

The above remedy of product defects through repair by an Authorized TORO Service Dealer is the purchaser's sole remedy for any defect.

THERE IS NO OTHER EXPRESS WARRANTY. ALL IMPLIED WARRANTIES OF MERCHANTABILITY AND FITNESS FOR USE ARE LIMITED TO THE DURATION OF THE EXPRESS WARRANTY.

Some states do not allow limitations on how long an implied warranty lasts, so the above limitation may not apply to you.

This warranty applies only to parts or components which are defective and does not cover repairs necessary due to normal wear, misuse, accidents, or lack of proper maintenance. Regular, routine maintenance of the unit to keep it in proper operating condition is the responsibility of the owner.

All warranty repairs reimbursable under The Toro Promise must be performed by an Authorized TORO Service Dealer using Toro approved replacement parts.

Repairs or attemped repairs by anyone other than an Authorized TORO Service Account are not reimbursable under The Toro Promise. In addition, these unauthorized repair attempts may result in additional malfunctions, the correction of which is not covered by warranty.

THE TORO COMPANY IS NOT LIABLE FOR INDIRECT, INCIDENTAL OR CONSEQUENTIAL DAMAGES IN CONNECTION WITH THE USE OF THE PRODUCT INCLUDING ANY COST OR EXPENSE OF PROVIDING SUBSTITUTE EQUIPMENT OR SERVICE DURING PERIODS OF MALFUNCTION OR NON-USE.

Some states do not allow the exclusion or limitation of incidental or consequential damages, so the above limitation or exclusion may not apply to you.

This warranty gives you specific legal rights, and you may also have other rights which vary from state to state.

COUNTRIES OTHER THAN THE UNITED STATES OR CANADA

Customers who have purchased TORO products exported from the United States or Canada should contact their TORO Distributor (Dealer) to obtain guarantee policies for your country, province or state. If for any reason you are dissatisfied with your Distributor's service or have difficulty obtaining guarantee information, contact the TORO importer. If all other remedies fail, you may contact us at The Toro Company.

Compliance with Radio Interference Regulations Certified.
Certifie Conforme au Reglement sur le Brouillage Radioelectrique.

MAINTENANCE RECORD

Date	Hours Used	Oil Change	Air Cleaner Service	Lubrication	Winter Storage	Spring Service	Spark Plug Gap

Litho in U.S.A.