Form No. 3327–580 Rev A

TORO®

Quiet Collector

Wheel Horse® Lawn and Garden Tractor Attachment

Model No. 78200—Serial No. 220000001 and Up

Operator's Manual

CE

English (GB)

Contents

	Page
Introduction	2
Safety	3
Safety and Instruction Decals	4
Setup	5
Loose Parts	5
Installing the Quick Hitch	6
Installing the Collector Drive	7
Installing the Collector	8
Installing the Mower	9
Installing the Boot Bracket	9
Installing the Discharge Tubes	10
Installing the Decal	11
Installing the Front Wheel Weights	11
Operation	11
Empty the Quiet Collector	11
Holding the Collector Door Open	12
Changing the Draft Control	12
Engaging the Quiet Collector PTO	12
Clearing Obstructions From the Collector	13
Using the Full Collector Gauge	13
Operating and Bagging Tips	13
Removing the Collector	14
Maintenance	15
Recommended Maintenance Schedule	15
Cleaning the Screen	15
Cleaning the Collector	15
Lubricating the Idler Arm	15
Inspecting the Collector	15
Inspecting the Mower Blades	15
Storage	15
Troubleshooting	16

Introduction

Read this manual carefully to learn how to operate and maintain your product properly. The information in this manual can help you and others avoid injury and product damage. Although Toro designs and produces safe products, you are responsible for operating the product properly and safely.

Whenever you need service, genuine Toro parts, or additional information, contact an Authorized Service Dealer or Toro Customer Service and have the model and serial numbers of your product ready. Figure 1 illustrates the location of the model and serial numbers on the product.

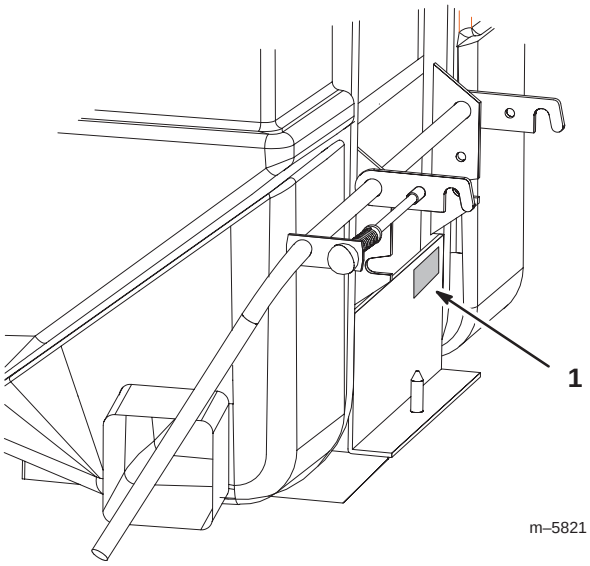

Figure 1

1. Location of the model and serial numbers

Write the product model and serial numbers in the space below:

Model No. _____

Serial No. _____

This manual identifies potential hazards and has special safety messages that help you and others avoid personal injury and even death. ***Danger***, ***Warning***, and ***Caution*** are signal words used to identify the level of hazard. However, regardless of the hazard, be extremely careful.

Danger signals an extreme hazard that *will* cause serious injury or death if you do not follow the recommended precautions.

Warning signals a hazard that *may* cause serious injury or death if you do not follow the recommended precautions.

Caution signals a hazard that may cause minor or moderate injury if you do not follow the recommended precautions.

This manual uses two other words to highlight information. **Important** calls attention to special mechanical information and **Note:** emphasizes general information worthy of special attention.

The following list contains safety information specific to Toro products and other safety information you must know.

© 2002 by The Toro Company
8111 Lyndale Avenue South
Bloomington, MN 55420-1196

All Rights Reserved
Printed in the USA

Safety

The following list contains safety information specific to Toro products and other safety information you must know.

- Become familiar with the safe operation of the equipment ant with the operator controls, and safety signs.
- Use extra care with grass catchers or other attachments. These can change the operating characteristics and the stability of the machine.
- Follow the manufacturer’s recommendations for adding or removing wheel weights or counterweights to improve stability.
- Do not use a grass catcher on steep slopes. A heavy grass catcher could cause loss of control or overturn the machine.
- Slow down and use extra care on hillsides. Be sure to travel in the recommended direction on hillsides. Turf conditions can affect the machine’s stability. Use extreme caution while operating near drop–offs.
- Keep all movement on slopes slow and gradual. Do not make sudden changes in speed, directions or turning.
- The grass catcher can obstruct the view to the rear. Use extra care when operating in reverse.
- Use care when loading or unloading the machine into a trailer or truck
- Never operate with the discharge deflector raised, removed or altered, unless using a grass catcher or mulching baffles.
- Keep hands and feet away from moving parts. Do not make adjustments with the engine running.
- Stop on level ground, disengage drives, chock or block wheels, shut off engine before leaving the operator’s position for any reason including emptying the grass catcher or unclogging the chute.
- If you remove the grass catcher, be sure to install any discharge deflector or guard that might have been removed to install the grass catcher. Do not operate the mower without either the entire grass catcher or the grass deflector in place.
- Stop the engine before removing the grass catcher or unclogging the chute.
- Do not leave grass in grass catcher for extended periods of time.
- Grass catcher components are subject to wear, damage and deterioration, which could expose moving parts or allow objects to be thrown. Frequently check components and replace with manufacturer’s recommended parts, when necessary.

Safety and Instruction Decals

Safety decals and instructions are easily visible to the operator and are located near any area of potential danger. Replace any decal that is damaged or lost.

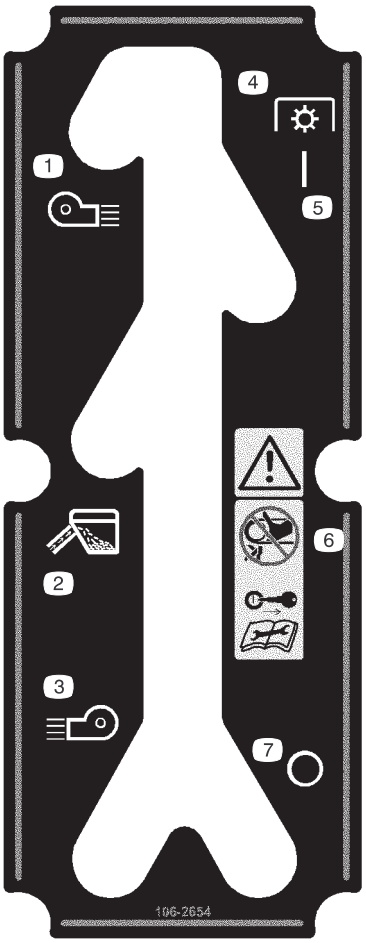

106-2654

1. Blow left
2. Collect grass
3. Blow right
4. Power Takeoff (PTO)
5. On
6. Warning—do not touch or approach moving belts; remove the ignition key and read the instructions before servicing or performing maintenance.
7. Off

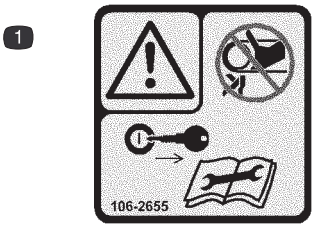

106-2655

1. Warning—do not touch or approach moving belts; remove the ignition key and read the instructions before servicing or performing maintenance.



98-3679

1. Squeeze the lever.
2. Raise the handle to the dump position.
3. Release the lever.
4. Lower the handle to dump the grass clippings.
5. Return the handle to the dump position.
6. Squeeze the lever and lower the handle to the operation position.
7. Release the lever.

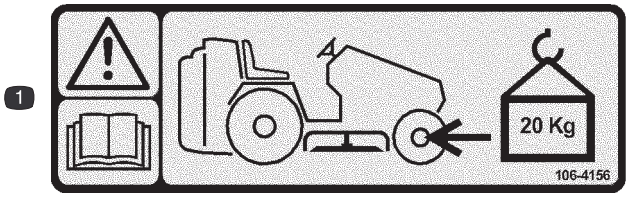

106-4156

1. Warning—read the *Operator's Manual*; install front wheel weights (20 kg).

Setup

Note: Determine the left and right sides of the machine from the normal operating position.

Loose Parts

Note: Use the chart below to verify all parts have been shipped.

DESCRIPTION	QTY.	USE
Quick hitch	1	Installing the quick hitch
Tow hitch extension	1	
Locknut, 1/2 in.	4	
Locknut, 3/8 in.	2	
Carriage Bolt, 3/8 x 1 in.	2	
Carriage Bolt, 1/2 x 1–1/4 in.	2	
Jack shaft assembly	1	Installing the collector drive
Bolt, 1/4 x 1 in.	2	
Locknut, 1/4 in.	2	
Locknut, 5/16 in.	2	
Engine pulley—double	1	
Carriage Bolt, 5/16 x 1 in.	2	
Shim	1	
PTO stop	1	
Bolt, 5/16 x 1–1/2 in.	2	
Bolt, 7/16 x 5–1/2 in.	1	
Lock washer, 5/16 in.	2	
Collector	1	Installing the collector
Dumping arm	1	
Collector door	1	
Knobs	2	
Cotter pin, 3/16 x 1 in.	1	
Clevis pin	1	
Hairpin cotter pin	1	
V–belt—drive	1	Installing the belts
V–belt—collector	1	
Template number 1 —42 in. (107 cm) mowers	1	Installing the boot bracket
Template number 2 —48 in. (122 cm) mowers	1	
Boot bracket	1	
Bolt, 1/4 x 1/2 in.	2	
Flange nut, 1/4 in.	2	

DESCRIPTION	QTY.	USE
Upper tube	1	
Middle tube	1	
Boot	1	
Carriage bolt, 1/4 x 3/4 in.	3	Installing the discharge tubes
Flange nut, 1/4 in.	3	
Pin	1	
Hairpin cotter pin	1	
Decal	1	Installing the decal
Operator's manual	1	Read before operation

Installing the Quick Hitch

1. Raise the rear of the tractor and support with jack stands.

Danger

Mechanical or hydraulic jacks may fail to support machine and cause a serious injury.

- **Use jack stand when supporting machine.**
- **Do not use hydraulic jacks.**

2. Remove both rear tractor wheels (Fig. 2).

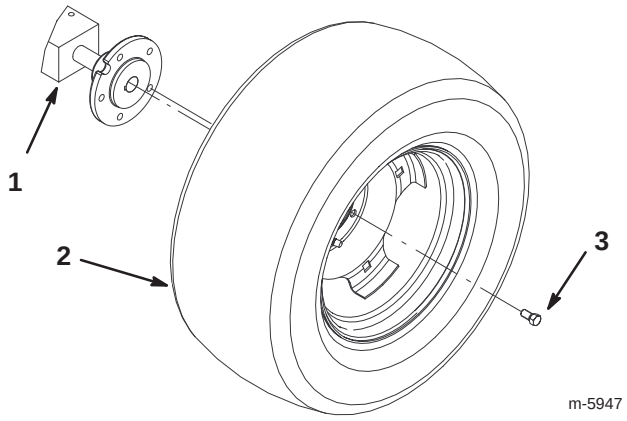

Figure 2

1. Tractor
2. Tire
3. Lug

3. Install the quick hitch to the tractor using 2 carriage bolts (3/8 x 1 in.) in the rear holes and secure with 2 locknuts (3/8 in.) (Fig. 3).

4. Install 2 carriage bolts (1/2 x 1–1/4 in.) in the front holes. Secure bolts with 2 locknuts (1/2 in.) (Fig. 3).

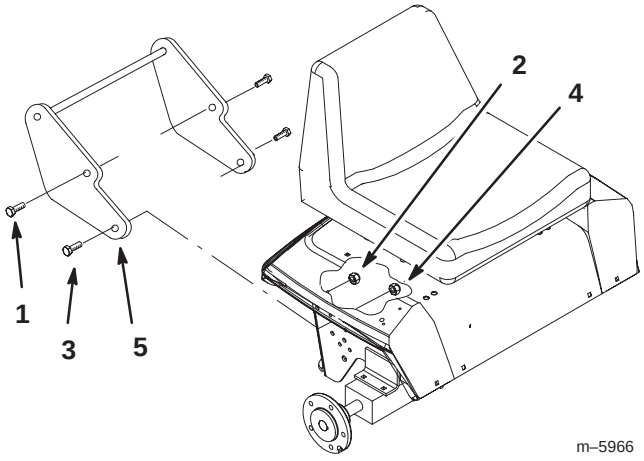

Figure 3

1. Carriage bolt, 3/8 x 1 in.
2. Lock nut, 3/8 in.
3. Carriage bolt, 1/2 x 1–1/4 in.
4. Lock nut, 1/2 in.
5. Quick hitch

5. Install the tow hitch extension to the tractor using 2 bolts (1/2 x 1–1/4 in.) and 2 locknuts (1/2 in.) (Fig. 4).

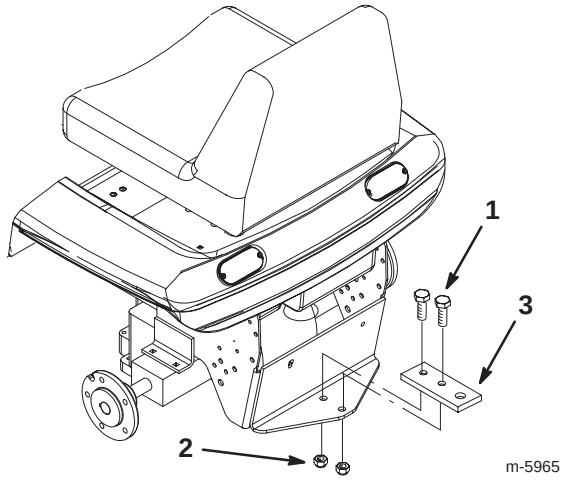

Figure 4

1. Bolt, 1/2 x 1–1/4 in.
2. Lock nut, 1/2 in.
3. Tow hitch extension

Installing the Collector Drive

1. Remove the mower. Refer to the mower operators manual.

2. Install the jack shaft assembly inside the tractor frame with 2 bolts (1/4 x 1 in.), 2 carriage bolts (5/16 x 1 in.), 2 locknuts (1/4 in.), and 2 locknuts (5/16 in.) (Fig. 5).

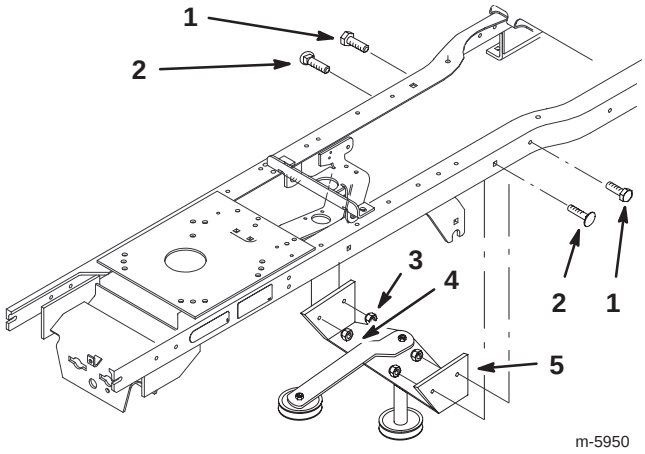

Figure 5

1. Bolt, 1/4 x 1 in.
2. Carriage Bolt, 5/16 x 1 in.
3. Locknut, 1/4 in.
4. Locknut, 5/16 in.
5. Jack shaft

3. Unplug the clutch terminal and remove the electric clutch and the engine pulley (Fig. 8). Save the washer and discard the bolt.

4. Remove the clutch stop from the frame of the machine (Fig. 6).

5. Install the new shim/upstop and clutch stop to the frame with 2 bolts (5/16 x 1–1/2 in.) and 2 lockwashers (Fig. 6).

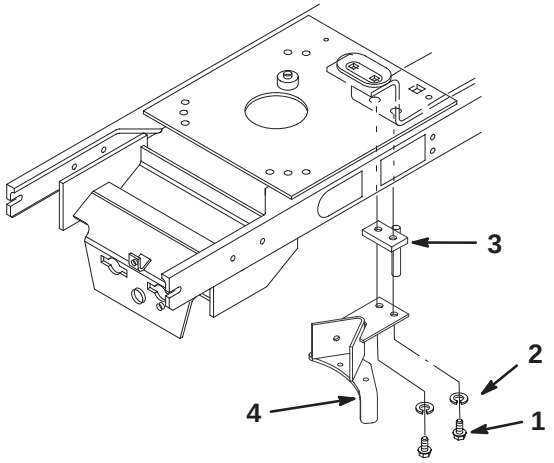

Figure 6

1. Bolt, 5/16 x 1–1/2 in.
2. Lock washer, 5/16 in.
3. Shim/upstop
4. Clutch stop

6. Install the drive belt around the jack shaft pulley. Do not put it around the drive belt idler (Fig. 7).

7. Loosely, install both the drive belt and transaxle belt around the engine pulley (Fig. 7).

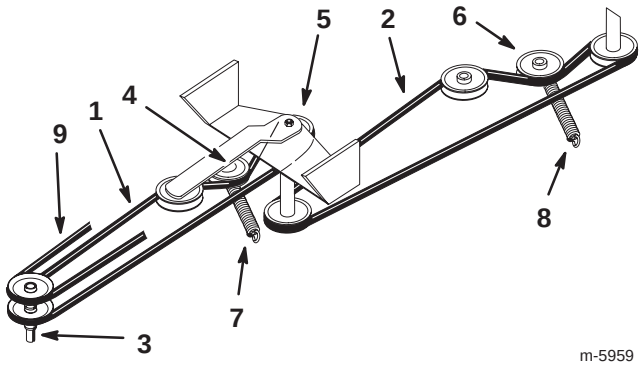

Figure 7

1. Drive belt
2. Collector belt
3. Engine pulley
4. Drive belt idler pulley
5. Jack shaft pulleys
6. Collector belt idler pulley
7. Drive belt idler spring
8. Collector belt idler spring
9. Transaxle belt

Note: Use removable Loctite®, or an equivalent thread locker, on the new clutch bolt (7/16 x 5–1/2 in.).

8. Install the electric clutch and new engine pulley. Use existing washer and new bolt (7/16 x 5–1/2 in.) (Fig. 8).

9. Plug in the clutch terminal (Fig. 8).

10. Install the drive belt completely around all pulleys and idler pulley (Fig. 7).

11. Install the drive belt idler spring (Fig. 7).

12. Install the transaxle belt completely around all pulleys (Fig. 7).

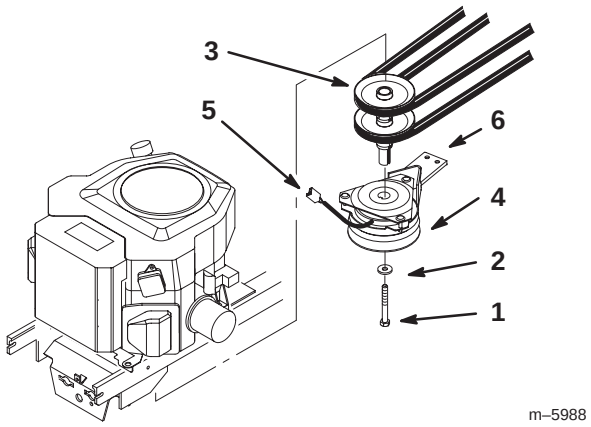

Figure 8

1. Hex bolt, 7/16 x 5–1/2 in.
2. Washer, previously removed
3. Engine pulley
4. Electric clutch
5. Clutch terminal
6. Clutch stop

Installing the Collector

1. Align the hinges on both halves of the collector. The halves must be positioned in the closed position (Fig. 9).

2. Push the dumping arm through the hinges and secure with a cotter pin (3/16 x 1 in.) (Fig. 9).

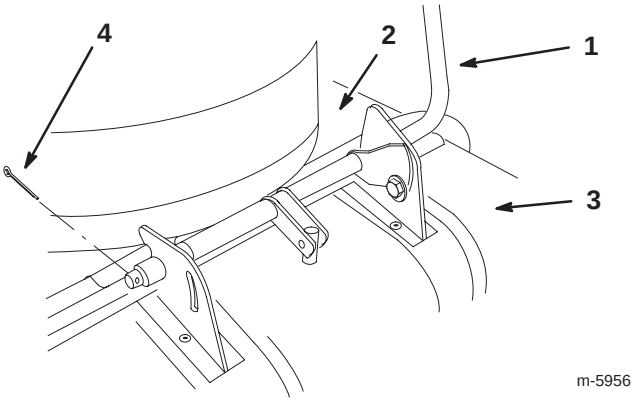

Figure 9

1. Dumping arm
2. Collector hopper
3. Collector door
4. Cotter pin

3. Install the oval knobs on the draft control and the collector clutch control (Fig. 10).

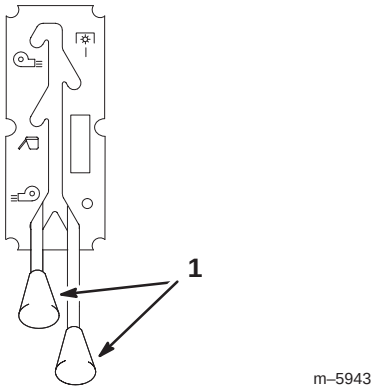

Figure 10

1. Knob

4. Place the quick hitch hooks, on the collector, over the quick hitch round bar (Fig. 11).

5. Pull the hitch lever up. This will raise the hopper and engage the collector pin into the hitch extension (Fig. 11).

6. Pull locking pin out to allow the collector to be raised into full upright position (Fig. 11).

7. When the collector is in upright position, release the locking pin and lock collector in position (Fig. 11).

8. Secure left side hitch hook with a clevis pin (3/8 x 1–1/2 in.) and a hairpin cotter (Fig. 11).

9. Install the collector belt onto the the jack shaft pulley and fully install the collector belt (Fig. 7).

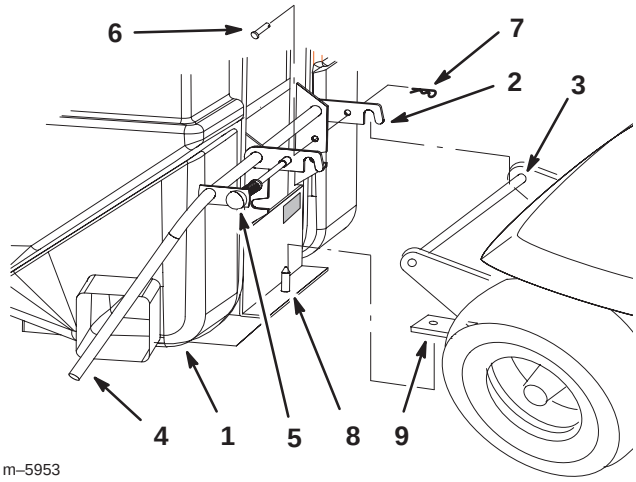

Figure 11

1. Collector
2. Quick hitch hooks
3. Quick hitch round bar
4. Hitch lever
5. Locking pin
6. Clevis pin, 3/8 x 1–1/2 in.
7. Hairpin cotter
8. Collector pin
9. Hitch extension

Installing the Mower

For installing the mower, refer to the mower operator's manual.

Important If extreme low cut height is used, install mower drive belt in bottom engine pulley.

Installing the Boot Bracket

Note: There are two templates for installing the boot bracket. Template number 1 is for 42 in. (107 cm) mowers only and template number 2 is for 48 in. (122 cm) mowers only.

Installing the Boot Bracket onto 42 in. (107 cm) Mowers

Note: Use template number 1, in the back of this operator's manual, for locating holes to drill.

1. Locate and cut out template number 1 [42 in. (107 cm) mower] as indicated on the template.
2. Remove the existing belt guard (Fig. 12).
3. Place template number 1 on top of the mower and align it by matching the existing holes in the mower (Fig. 12).
4. Center punch the 2 holes that are to be drilled and remove the template (Fig. 12).
5. Drill two, 9/32 in. diameter, holes at the marked locations.
6. Install the boot bracket with 2 bolts (1/4 x 1/2 in.) and 2 flange nuts (1/4 in.) (Fig. 14).

Note: Install the bolt heads on top of the mower.

7. Install the belt guard (Fig. 12).

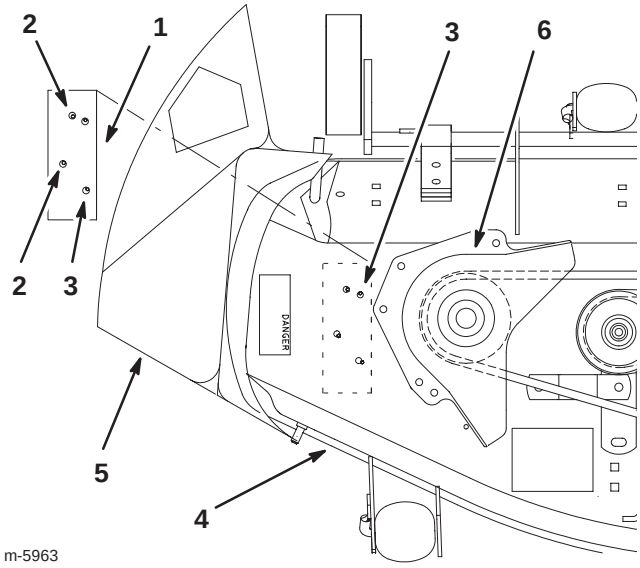

Figure 12

1. Template
2. Hole to drill
3. Existing hole
4. Mower
5. Grass deflector
6. Belt guard

Installing the Boot Bracket onto 48 in. (122 cm) Mowers

Note: Use template number 2, in the back of this operators manual, for locating holes to drill.

1. Locate and cut out template number 2 [48 in. (122 cm) mower] as indicated on the template.
2. Remove the existing belt guard (Fig. 13).
3. Place template number 2 on top of the mower. Align it so the notch in the template fits around the reinforcement plate and the template matches the existing hole (Fig. 13).
4. Center punch the 2 holes that are to be drilled and remove the template (Fig. 13).
5. Drill two, 9/32 in. diameter, holes at the marked locations.
6. Install the boot bracket with 2 bolts (1/4 x 1/2 in.) and 2 flange nuts (1/4 in.) (Fig. 14).

Note: Install the bolt heads on top of the mower.

7. Install the belt guard (Fig. 13).

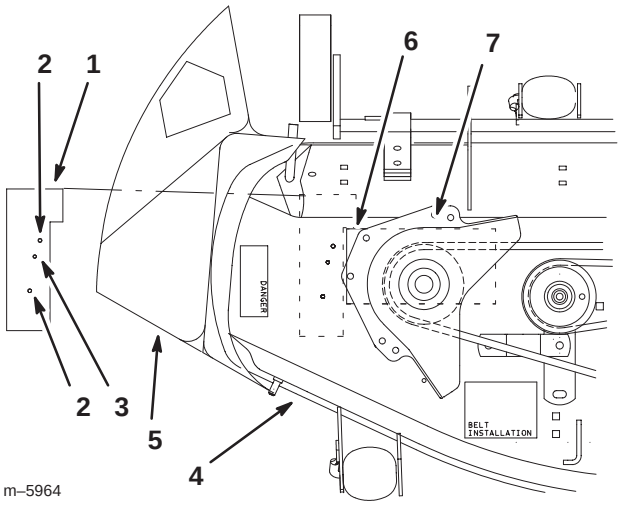

Figure 13

1. Template
2. Hole to drill
3. Existing hole
4. Mower
5. Grass deflector
6. Re–enforcement plate
7. Belt guard

Installing the Discharge Tubes

1. Disengage the PTO and set the parking brake.

2. Stop the engine, remove the key, and wait for all moving parts to stop before leaving the operating position.

3. Lift the grass deflector all the way back. This will eliminate interference with the boot (Fig. 14).

4. Align the boot with the boot bracket (Fig. 14).

5. Install the boot pin through the boot and boot bracket and secure with a hair pin cotter (Fig. 14).

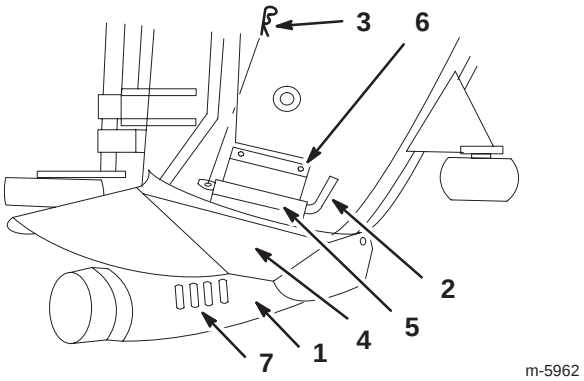

Figure 14

1. Boot
2. Boot Pin
3. Hairpin cotter pin
4. Grass deflector
5. Boot bracket
6. Bolt, 1/4 x 1/2 in. and flange nut, 1/2 in.
7. Slots in boot

6. Slide the middle tube onto the boot and latch them together (Fig. 15).

7. Install the upper tube into the collector and onto the middle tube (Fig. 15).

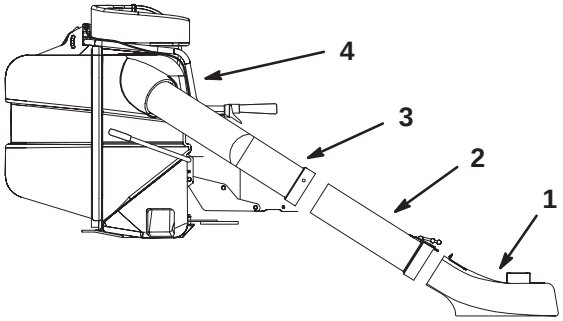

Figure 15

1. Boot
2. Middle tube
3. Upper tube
4. Collector

8. Using the upper tube as a template, mark the hole locations on the middle tube (Fig. 16).

9. Remove the upper tube and middle tube.

10. Drill 3 holes, 9/32 in. diameter, into the middle tube (Fig. 16).

11. Install the middle and upper tube with 3 carriage bolts (1/4 x 3/4 in.) and 3 flange nuts (1/4 in.) (Fig. 16).

Important Make sure the bolt heads are on the inside of the middle tube.

12. Install the upper and middle tube to collector and boot. (Fig. 15).

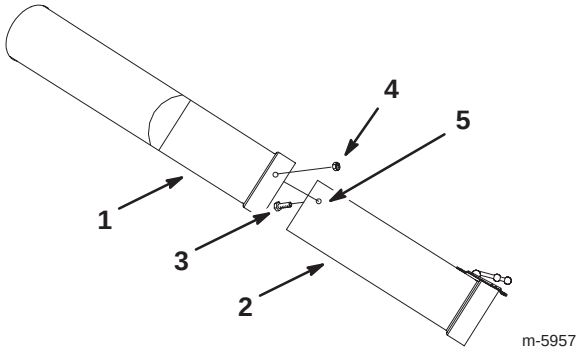

Figure 16

1. Upper tube
2. Middle tube
3. Bolt, 1/4 x 3/4 in.
4. Flange nut, 1/4 in.
5. 9/32 in. hole

Installing the Decal

1. Clean an area on the left–hand tractor frame for the decal (Fig. 17)

2. Install the decal on the tractor frame (Fig. 17)

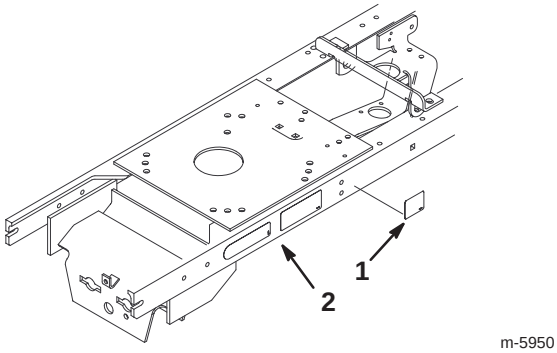

Figure 17

1. Decal
2. Left–hand tractor frame

Installing the Front Wheel Weights

Caution

The bagger adds a lot of weight to the rear of the machine, causing a potential unstable condition which could result in a loss of control.

- **Install the front wheel weights.**

Contact an Authorized Service Dealer for the correct front wheel weights needed with the collector.

Operation

Note: Determine the left and right side of the machine from the normal operating position.

Warning

To avoid personal injury, follow these procedures:

- **Become familiar with all operating and safety instructions in the operator's manual for your mower before using this attachment.**
- **Never remove the collector or collector tubes while the engine is running.**
- **Always shut the engine off, remove the key, and wait for all moving parts to stop before clearing an obstruction from the bagging system.**
- **Never do maintenance or repairs while the engine is running.**

Warning

Without the grass deflector, collector tubes or complete collector assembly mounted in place, you and others are exposed to blade contact and thrown debris. Contact with the rotating mower blade(s) and thrown debris will cause injury or death.

- **Never remove the grass deflector from the mower because the grass deflector routes material down toward the turf. If the grass deflector is ever damaged, replace it immediately.**
- **Never put your hands or feet under the mower.**
- **Never try to clear the discharge area or mower blades unless you move the power take off (PTO) to *off* and rotate the ignition key to o*ff*. Also remove the key and pull the wire off of the spark plug(s).**

Empty the Quiet Collector

1. Disengage the quiet collector PTO control (Fig. 20).

2. Disengage the mower PTO and set the parking brake.

Note: If the PTO is engaged, it is impossible to open the collector due to the vacuum action inside.

3. Squeeze the collector lever on the collector arm (Fig. 18).

4. Raise the collector arm to the highest position and release the collector lever (Fig. 18). The locking pin will drop into a hole in the highest position.
5. Pull the collector arm down to raise the back of the collector (Fig. 18).
6. Close the back of the collector and squeeze the collector lever (Fig. 18).
7. Lower the collector arm to the working position (Fig. 18).

Note: Make sure the collector door is fully sealed before collecting grass.

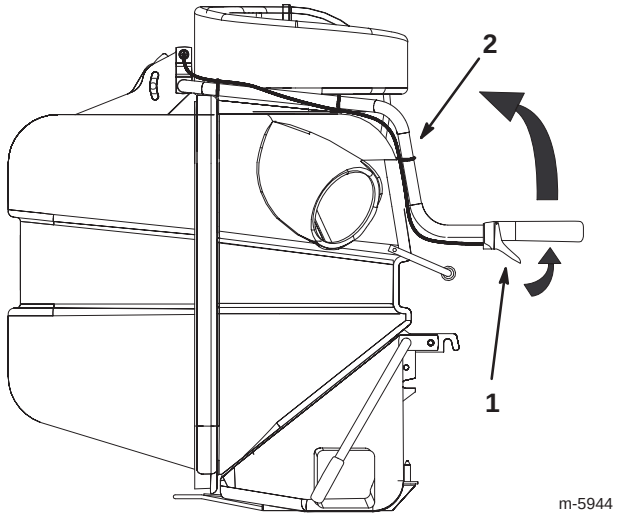

Figure 18

1. Collector lever
2. Collector arm

Holding the Collector Door Open

Warning

Hands, fingers and arms can get pinched between the back and front sections of the collector.

- **Keep people away from collector while emptying it.**
- **If working on the inside, use the holding pin to hold the collector door open.**

1. Disengage the quiet collector PTO control (Fig. 20).
2. Disengage the mower PTO and set the parking brake.
3. Stop the engine, remove the key, and wait for all moving parts to stop before leaving the operating position.
4. Open the collector; refer to Opening the Quiet Collector, page 11.
5. With the collector open, pull out the holding pin and insert into the hole in the hinge (Fig. 19).

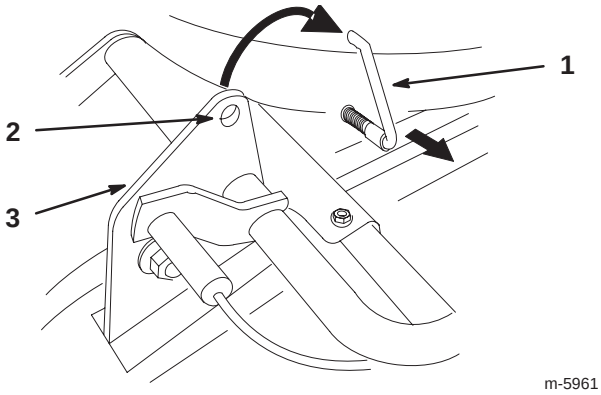

Figure 19

1. Holding pin
2. Hole in hinge
3. Hinge

Changing the Draft Control

The draft control is located on the left side of collector. There are three positions for the draft control; blow left, blow right or collecting.

1. To blow right, move the draft control to the lowest position (Fig. 20).
2. For collecting grass, move the draft control to the middle position (Fig. 20).
3. To blow left, move the draft control to the highest position (Fig. 20).

Engaging the Quiet Collector PTO

The PTO control is located on the left side of collector (Fig. 20).

1. To engage the collector, move the PTO control to the upper position. (Fig. 20).
2. To disengage the collector, move the PTO control to the lowest position (Fig. 20).

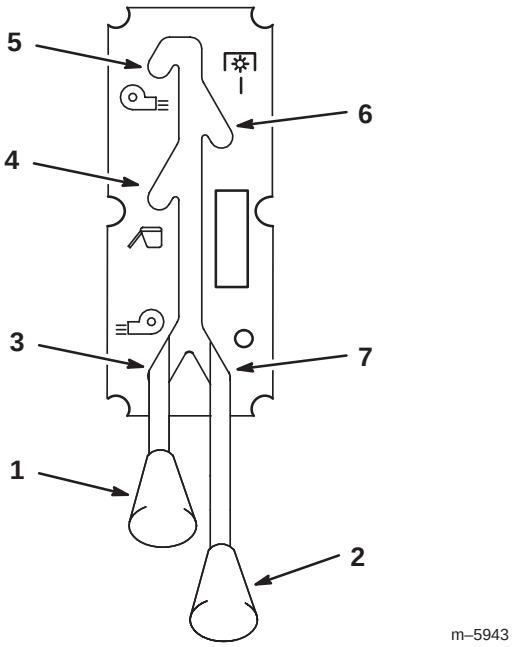

Figure 20

1. Collector Draft control
2. Collector PTO control
3. Blow right position
4. Collect grass position
5. Blow left position
6. Collector PTO engaged
7. Collector PTO disengaged

Clearing Obstructions From the Collector

1. Empty the collector.

2. Disengage the quiet collector PTO control (Fig. 20).

3. Disengage the mower PTO and set the parking brake.

4. Stop the engine, remove the key, and wait for all moving parts to stop before leaving the operating position.

5. Remove the upper tube and middle tube from the collector.

6. Using a stick or similar object, carefully remove and clear the obstruction from the mower, upper tube, middle tube, or boot assembly.

7. After you remove the obstruction, install the complete collector system and resume operation. Refer to Installing the Discharge Tube on page 10.

Using the Full Collector Gauge

1. To determine when the collector is full, use the following two methods.

A. Raise the gauge arm frequently (Fig. 21). If you feel resistance, it indicates the collector is full and needs to be emptied.

B. If grass is seen building up in the slots, on top of the boot (Fig. 14), the collector is full and needs to be emptied. This can also mean that you are mowing too fast and the boot is beginning to plug.

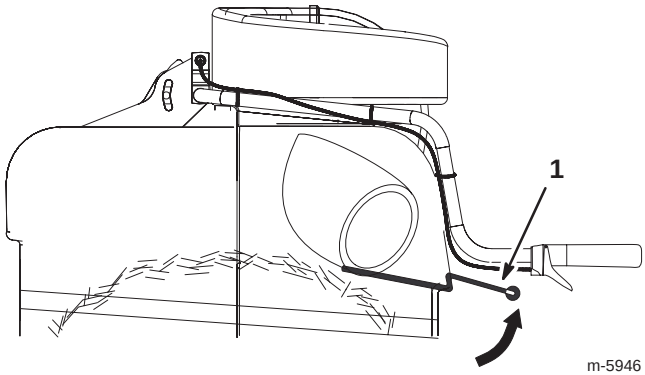

Figure 21

1. Gauge arm

Operating and Bagging Tips

Size

Remember that the tractor is longer and wider with this attachment installed. By turning too sharply in confined places you may damage the attachment.

Trimming

Always trim with the left side of the mower. Do not trim with the right side of the mower because you could damage the collector’s blower and discharge tube.

Cutting Height

Do not set the mower cutting height too low because long grass surrounding the mower can prevent air from getting under the mower and entering the bagging system. If enough air doesn’t get under the mower, the bagging system will plug.

Cutting Frequency

Cut the grass often, especially when it grows rapidly. You will have to cut your grass twice if it gets excessively long (refer to Bagging Long Grass, page 14).

Cutting Technique

For best lawn appearance, be sure to slightly overlap the mower into the previously cut area. This helps reduce the load on the engine and reduces the chance of plugging the blower and discharge tube.

Bagging Speed

Most often you will bag with the tractor throttle in the **fast** position and drive at a normal ground speed. However, in extremely dry and dusty grass, you may want to slightly reduce throttle speed and increase ground speed of the tractor. The bagging system may plug if you drive too fast and the engine speed gets too slow. On hills it may be necessary to slow the tractor's ground speed. This helps maintain engine speed and bagging efficiency. Mow down hill whenever possible.

Caution

As the collector fills, extra weight is added to the back of the tractor. If you stop and start suddenly on hills, you may lose steering control or the tractor may tip.

- **Do not start or stop suddenly when going uphill or downhill. Avoid uphill starts.**
- **If you do stop the tractor when going uphill, disengage the PTO (stop the mower blades) by pushing the PTO control to *off*. Then back down the hill using slow reverse speed.**
- **Do not change speeds or stop on slopes.**

Bagging Long Grass

Excessively long grass is heavy and may not be propelled completely into the collector. If this happens, the discharge tube and blower may plug. To avoid plugging the bagging system, mow the grass at a high height-of-cut, then lower the mower to your normal cutting height and repeat the bagging process.

Bagging Wet Grass

Always try to cut grass when it is dry because your lawn will have a neat appearance. If you must cut wet grass, use the conventional side discharge feature of the mower. Several hours later, when the clippings are dry, install the complete collector attachment and vacuum up the grass clippings.

Signs of Plugging

As you are bagging, a small amount of grass clippings normally blow out the front of the mower. An excessive amount of clipping blow-out indicates that the collector is full or the system is plugged.

Also, grass may be seen building up inside the slot on top of the boot.

Removing the Collector

1. Disengage the quiet collector PTO control (Fig. 20).
2. Empty the collector.
3. Disengage the mower PTO and set the parking brake.
4. Stop the engine, remove the key, and wait for all moving parts to stop before leaving the operating position.
5. Unlatch the middle tube from the boot (Fig. 15).
6. Remove the upper and middle tubes from the collector (Fig. 15).
7. Remove the hairpin cotter pin and boot pin from the boot bracket (Fig. 14).
8. Remove the boot from the mower and lower the grass deflector (Fig. 14).

Warning

An uncovered discharge opening could allow the lawn mower to throw objects in the operator's or bystander's direction and result in serious injury. Also, contact with the blade could occur.

Never operate the lawn mower unless you install a grass deflector, a mulch plate, or discharge tubes and bagger.

9. Remove the collector belt.
10. Remove the clevis pin and hairpin cotter from the left side of the collector (Fig. 11).
11. Unlatch the locking pin on the right–hand side of the collector (Fig. 11).
12. Remove the collector from the quick hitch (Fig. 11).
13. Remove the **front wheel weights**.

Maintenance

Note: Determine the left and right side of the machine from the normal operating position.

Recommended Maintenance Schedule

Maintenance Service Interval	Maintenance Procedure
Each Use	• Screen—clean
10 Hours	• Collector—clean
40 Hours	• Collector—check belt tension • Collector—inspect • Collector idler arms—oil/lubricate
Storage Service	• Collector idler arms—oil/lubricate • Belts—check for wear/cracks • Collector—belt tension • Collector—clean and inspect

Cleaning the Screen

The screen needs to be cleaned every 10 hours. In wet grass it will need to be cleaned more often.

1. Disengage the PTO and set the parking brake.
2. Stop the engine, remove the key, and wait for all moving parts to stop before leaving the operating position.
3. Open the collector and hold the collector door open. Refer to Holding the Collector Door Open on page 12.
4. Clean the debris from the screen.
5. Close the collector door.

Cleaning the Collector

The collector needs to be cleaned after each use.

1. Wash the inside and outside of the collector, upper tube, middle tube, boot assembly and the underside of the mower. Use a mild automotive detergent to remove dirt.
2. Make sure you remove matted grass from all parts.
3. After washing all parts, let them dry thoroughly.

Lubricating the Idler Arm

Lubricate the collector belt idler arms every 40 hours.

Inspecting the Collector

Inspect the collector attachment every 40 hours of operation.

1. Disengage the power take off (PTO), set the parking brake, turn the ignition key to off and remove the key.
2. Check the upper tube, middle tube, and the boot assembly. Replace these parts if they are cracked or broken.
3. Check the collector and screens. Replace any parts that are cracked or broken.
4. Tighten all nuts bolts and screws.

Inspecting the Mower Blades

1. Inspect the mower blades regularly and whenever a blade strikes a foreign object.
2. If blades are badly worn or damaged, install new blades. Refer to your mower operator's manual for complete blade maintenance.

Storage

1. Clean the collector attachment. Refer to Cleaning Obstructions from the Collector on page 13.
2. Inspect the collector attachment for damage. Refer to Inspecting the Collector on page 15.
3. Make sure the collector is empty and thoroughly dry.
4. Check the belt for wear or cracks.

5. Store the machine in a clean, dry place, out of direct sunlight. This protects the plastic parts and extends the life of the machine. If you must store the machine outside, cover it with a weatherproof cover.

Troubleshooting

Problem	Possible Causes	Corrective Action
Abnormal vibration.	1. Cutting blade(s) is/are bent or unbalanced.	1. Install new cutting blade(s).
	2. Blade mounting bolt is loose.	2. Tighten blade mounting bolt.
	3. Loose collector pulley or pulley assembly.	3. Tighten the appropriate pulley.
	4. Collector belt is worn or damaged.	4. Replace the collector belt.
	5. Bagger impeller is out of balance.	5. Contact Authorized Service Dealer.
Reduced bagging performance.	1. Low engine speed.	1. Always operate the collector at full throttle.
	2. Plugged fan screen.	2. Remove debris, leaves or grass clippings from the fan screen.
	3. Loose collector belt.	3. Check the collector belt tension.
	4. Broken seal between hopper and rear door.	4. Ensure the rear door is latched.
	5. A plugged boot.	5. Locate and remove plugged debris.
	6. Improper seal around the upper tube going into the hopper.	6. Ensure that there is a good seal at hopper.
	7. Full hopper.	7. Empty hopper.
Boot and tubes plug too frequently.	1. Hopper is too full.	1. Dump more frequently.
	2. Grass is too wet.	2. Cut grass when dry.
	3. Grass is too long.	3. Cut the grass twice. Once in a high height–of–cut and next in a normal height.
	4. Plugged fan screen.	4. Remove debris, leaves or grass clippings from the fan screen.
	5. Ground speed is to fast.	5. Drive slower at full throttle.
Debris blowout.	1. Hopper is too full.	1. Dump more frequently.
	2. Ground speed is to fast.	2. Drive slower at full throttle.
	3. Grass build up on slots in boot.	3. Drive slower at full throttle or the collector is full.

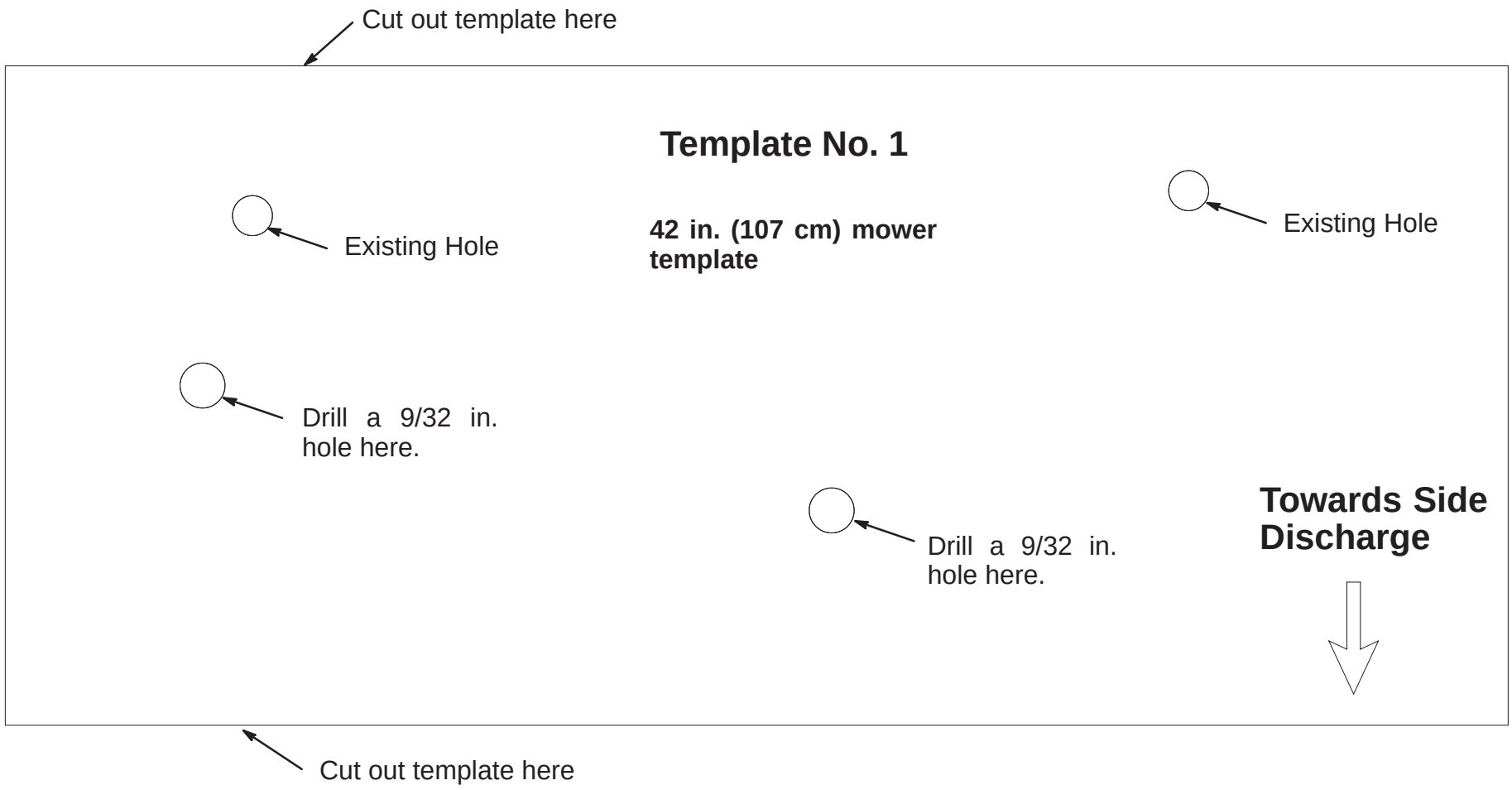

Scale

1 inch
26 mm

Template No. 1

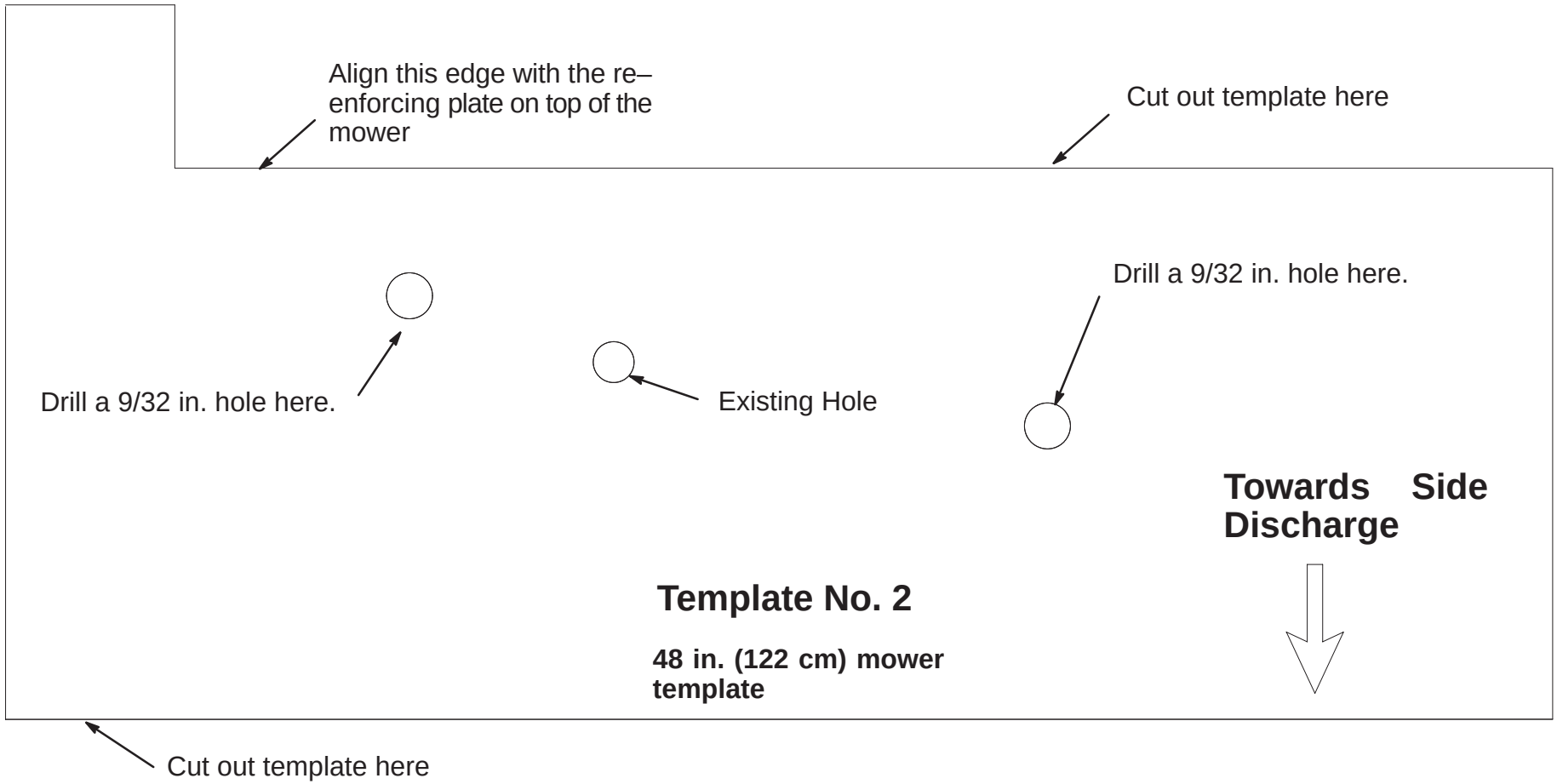

Scale

1 inch
26 mm

Template No. 2


TORO®