Form No. 3455-821 Rev B

TORO®

Count on it.

Operator's Manual

Reelmaster® 5510 Traction Unit

Model No. 03964—Serial No. 400000000 and Up

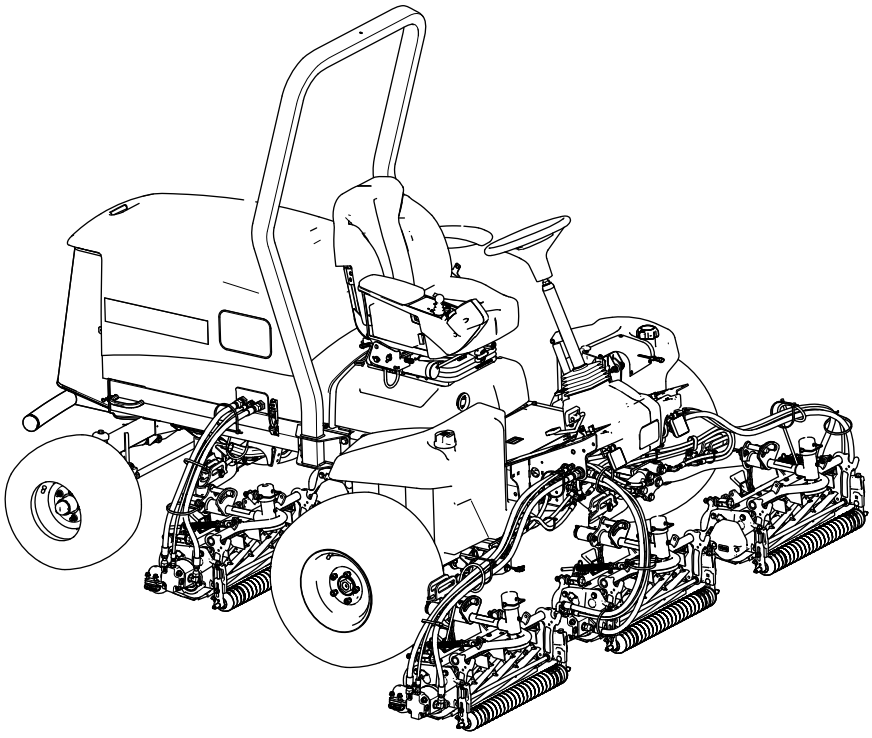

Register at www.Toro.com.
Original Instructions (EN)

3455-821

It is a violation of California Public Resource Code Section 4442 or 4443 to use or operate the engine on any forest-covered, brush-covered, or grass-covered land unless the engine is equipped with a spark arrester, as defined in Section 4442, maintained in effective working order or the engine is constructed, equipped, and maintained for the prevention of fire.

⚠ WARNING

CALIFORNIA
Proposition 65 Warning

Diesel engine exhaust and some of its constituents are known to the State of California to cause cancer, birth defects, and other reproductive harm.

Battery posts, terminals, and related accessories contain lead and lead compounds, chemicals known to the State of California to cause cancer and reproductive harm. Wash hands after handling.

Use of this product may cause exposure to chemicals known to the State of California to cause cancer, birth defects, or other reproductive harm.

Introduction

This machine is a ride-on, reel-blade lawn mower intended to be used by professional, hired operators in commercial applications. It is primarily designed for cutting grass on well-maintained turf. Using this product for purposes other than its intended use could prove dangerous to you and bystanders.

Read this information carefully to learn how to operate and maintain your product properly and to avoid injury and product damage. You are responsible for operating the product properly and safely.

Visit www.Toro.com for more information, including safety tips, training materials, accessory information, help finding a dealer, or to register your product.

Whenever you need service, genuine Toro parts, or additional information, contact an Authorized Service Dealer or Toro Customer Service and have the model and serial numbers of your product ready. Figure 1 identifies the location of the model and serial numbers on the product. Write the numbers in the space provided.

Important: **With your mobile device, you can scan the QR code on the serial number plate (if equipped) to access warranty, parts, and other product information.**

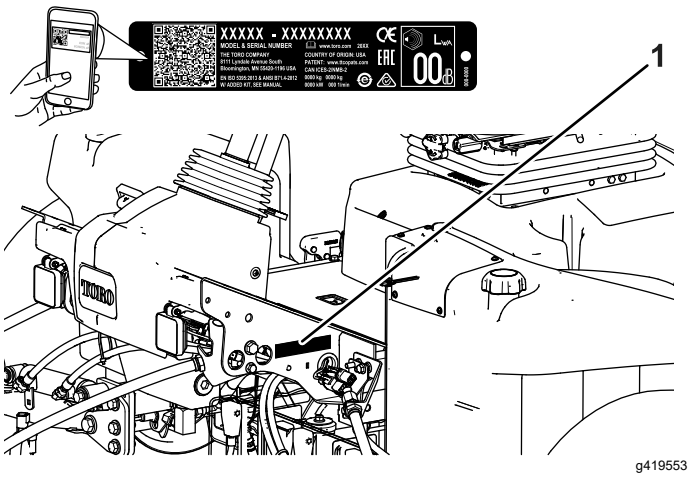

g419553

Figure 1

1. Model and serial number location

Model No. _____

Serial No. _____

This manual identifies potential hazards and has safety messages identified by the safety-alert symbol (Figure 2), which signals a hazard that may cause serious injury or death if you do not follow the recommended precautions.



g000502

Figure 2
Safety-alert symbol

This manual uses 2 words to highlight information. **Important** calls attention to special mechanical information and **Note** emphasizes general information worthy of special attention.

© 2024—The Toro® Company
8111 Lyndale Avenue South
Bloomington, MN 55420

Contact us at www.Toro.com.
Printed in the USA
All Rights Reserved

Contents

Safety 4
General Safety 4
Safety and Instructional Decals 5
Setup 9
1 Preparing the Machine 9
2 Adjusting the Control-Arm Position 10
3 Installing the Cutting Units 10
4 Using the Cutting-Unit Kickstand 17
5 Applying the Production Year Decal 18
Product Overview 19
Controls 19
Seat Controls 21
Specifications 22
Attachments/Accessories 22
Before Operation 23
Before Operation Safety 23
Performing Daily Maintenance 23
Fuel Specification 23
Fuel Tank Capacity 24
Adding Fuel 24
Checking the Interlock Switches 24
Using the InfoCenter LCD Display 25
Using the Menus 26
Protected Menus 27
Checking the Hydrostatic Braking Distance 29
Understanding Displayed Traction Speeds 30
During Operation 30
During Operation Safety 30
Understanding the Operating Characteristics of the Machine 31
Operating the Machine 31
Using the Traction Pedal 32
Using the Virtual Pedal Stop (VPS) Feature 32
Operating the Cruise Control 32
Understanding the Acceleration Mode 33
Understanding the Warm-Up Mode 33
Understanding Toro Smart Power™ 34
Starting the Engine 34
Shutting Off the Engine 34
Cutting Grass with the Machine 34
Setting the Reel Speed 35
Adjusting the Lift-Arm Counterbalance 35
Adjusting the Lift-Arm Turnaround Position 36
Adjusting the Turf-Compensation Spring 36
Understanding the Diagnostic Light 37
Operating Tips 37
After Operation 38
After Operation Safety 38
Hauling the Machine 38
Identifying the Tie-Down Points 38
Pushing or Towing the Machine 39
Maintenance 41
Maintenance Safety 41
Recommended Maintenance Schedule(s) 41
Daily Maintenance Checklist 43
Pre-Maintenance Procedures 44
Preparing for Maintenance 44
Opening the Hood 44
Closing the Hood 44
Opening the Screen 44
Closing the Screen 45
Tilting the Seat 45
Lowering the Seat 45
Jacking Point Locations 45
Lubrication 46
Greasing the Bearings and Bushings 46
Engine Maintenance 47
Engine Safety 47
Checking the Air Filter 47
Servicing the Air Cleaner 48
Resetting the Air Filter Service Indicator 48
Oil Specification 49
Checking the Level of the Engine Oil 49
Crankcase Oil Capacity 49
Changing the Engine Oil and Filter 49
Fuel System Maintenance 51
Fuel Maintenance 51
Storing Fuel 51
Servicing the Fuel-Water Separator 51
Bleeding the Fuel System 52
Inspecting the Fuel Lines and Connections 52
Draining the Fuel Tank 53
Cleaning the Fuel-Pickup Tube Screen 53
Priming the Fuel System 55
Electrical System Maintenance 56
Electrical System Safety 56
Disconnecting the 12 V Battery 56
Connecting the 12 V Battery 56
Charging the 12 V Battery 57
Servicing the 12 V Battery 57
Replacing a 12 V Fuse-Block Fuse 57
Replacing the TEC Fuse 58
Drive System Maintenance 58
Checking the Tire Air Pressure 58
Checking the Torque of the Wheel Nuts 58
Checking the Rear-Wheel Alignment 58
Adjusting the Rear Wheel Toe-in 59
Cooling System Maintenance 60
Cooling System Safety 60
Coolant Specification 60
Checking the Coolant Level 60
Removing Debris from the Cooling System 61
Belt Maintenance 62
Servicing the Alternator Belt 62
Hydraulic System Maintenance 62
Hydraulic System Safety 62

Hydraulic Fluid Specifications 62
Checking the Hydraulic-Fluid Level 63
Checking the Hydraulic Lines and Hoses 63
Replacing the Hydraulic Filters 63
Hydraulic Fluid Capacity 65
Changing the Hydraulic Fluid 65
Cutting Unit System Maintenance 66
Blade Safety 66
Checking the Reel-to-Bedknife Contact 66
Backlapping the Cutting Units 66
Chassis Maintenance 68
Inspecting the Seat Belt 68
Extended Chassis Maintenance 69
Chassis and Engine 69
Cleaning 69
Washing the Machine 69
Storage 70
Storage Safety 70
Preparing the Traction Unit 70
Preparing the Engine 70
Storing the Battery 70

Safety

General Safety

This product is capable of amputating hands and feet and of throwing objects.

- Read and understand the contents of this *Operator's Manual* before starting the engine.
- Use your full attention while operating the machine. Do not engage in any activity that causes distractions; otherwise, injury or property damage may occur.
- Do not put your hands or feet near moving components of the machine.
- Do not operate the machine without all guards and other safety protective devices in place and functioning properly on the machine.
- Keep bystanders and children out of the operating area. Never allow children to operate the machine.
- Shut off the engine, remove the key, and wait for all movement to stop before you leave the operator's position. Allow the machine to cool before adjusting, servicing, cleaning, or storing it.

Improperly using or maintaining this machine can result in injury. To reduce the potential for injury, comply with these safety instructions and always pay attention to the safety-alert symbol ⚠, which means Caution, Warning, or Danger—personal safety instruction. Failure to comply with these instructions may result in personal injury or death.

Safety and Instructional Decals

Safety decals and instructions are easily visible to the operator and are located near any area of potential danger. Replace any decal that is damaged or missing.



decalbatterysymbols

Battery Symbols

Some or all of these symbols are on your battery.

1. Explosion hazard
2. No fire, open flame, or smoking
3. Caustic liquid/chemical burn hazard
4. Wear eye protection.
5. Read the *Operator's Manual*.
6. Keep bystanders away from the battery.
7. Wear eye protection; explosive gases can cause blindness and other injuries.
8. Battery acid can cause blindness or severe burns.
9. Flush eyes immediately with water and get medical help fast.
10. Contains lead; do not discard

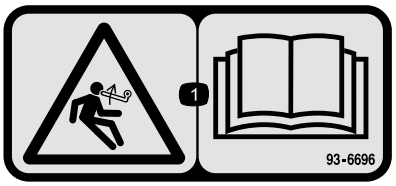

decal93-6696

93-6696

1. Stored energy hazard—read the *Operator's Manual*.

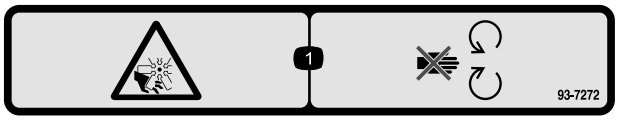

decal93-7272

93-7272

1. Cutting/dismemberment hazard; fan—stay away from moving parts.

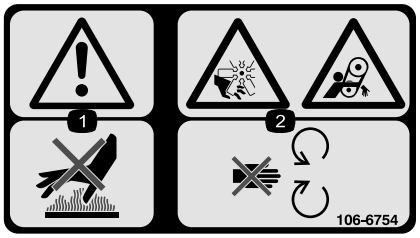

decal106-6754

106-6754

1. Warning—do not touch the hot surface.
2. Cutting/dismemberment hazard, fan; entanglement hazard, belt—stay away from moving parts.



decal106-6755

106-6755

1. Engine coolant under pressure.
2. Explosion hazard—read the *Operator's Manual.*
3. Warning—do not touch the hot surface.
4. Warning—read the *Operator's Manual.*

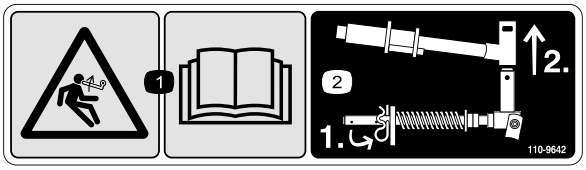

decal110-9642

110-9642

1. Stored energy hazard—read the *Operator's Manual.*
2. Move the cotter pin to the hole closest to the rod bracket and then remove the lift arm and pivot yoke.

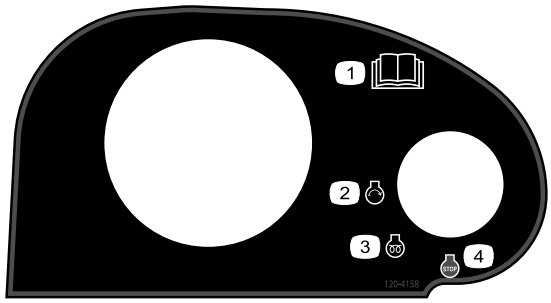

decal120-4158

120-4158

1. Read the *Operator's Manual*.
2. Engine—start
3. Engine—preheat
4. Engine—stop

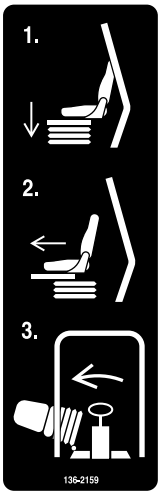

decal136-2159

136-2159

1. Move seat down
2. Slide seat forward
3. Rotate seat

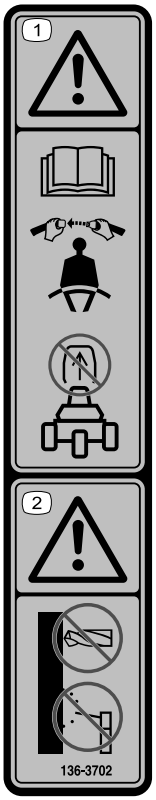

decal136-3702

136-3702

1. Warning—Read the *Operator's Manual*; wear a seatbelt; do not remove the roll bar.
2. Warning—Do not modify the roll bar.

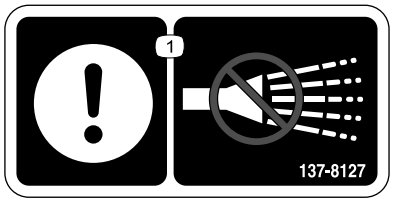

decal137-8127

137-8127

1. Attention—do not spray with high-pressure water.

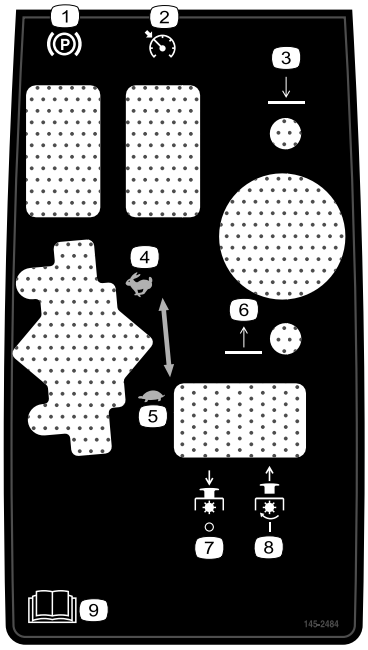

decal145-2484

145-2484

1. Parking brake
2. Cruise control
3. Lower the cutting units
4. Fast
5. Slow
6. Raise the cutting units
7. PTO—Off
8. PTO—On
9. Read the *Operator's Manual*.

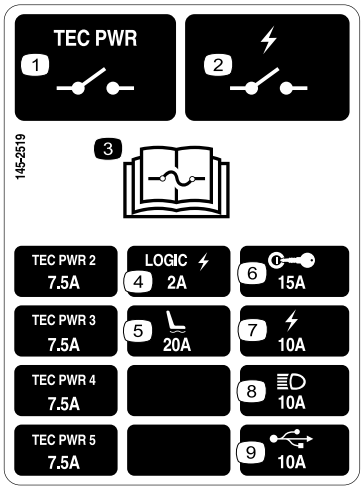

decal145-2519

145-2519

1. TEC power relay
2. Electrical power relay
3. Read the *Operator's Manual* for fuse information.
4. Logic electrical power
5. Air-ride seat
6. Key switch
7. Electrical power
8. Headlights
9. USB power point



decal133-2930

133-2930

1. Warning—do not operate this machine unless you are trained.
2. Warning—wear hearing protection.
3. Thrown object hazard—keep bystanders out of the operating area.
4. Tipping hazard—drive slowly when turning; do not turn sharply while traveling fast; only drive on slopes with the cutting units lowered; always wear a seatbelt.
5. Warning—do not park on slopes; engage the parking brake, lower the cutting units, shut off the engine, and remove the ignition key before leaving the machine.
6. Warning—read the *Operator's Manual*; do not tow the machine.

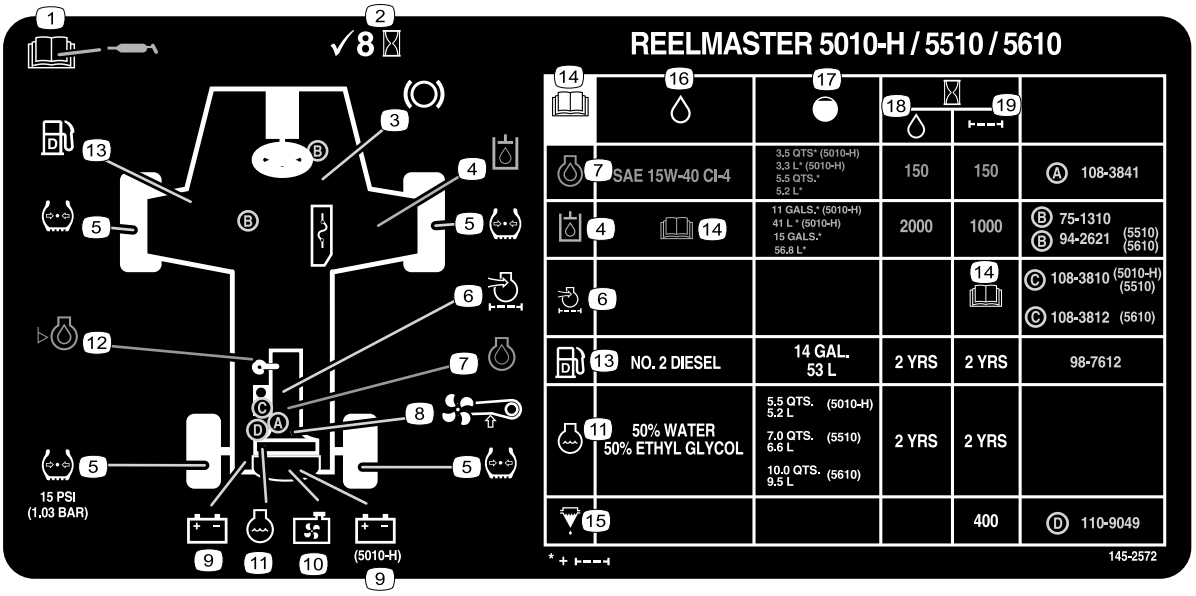

decal145-2572

145-2572

1. Read the *Operator's Manual* for lubrication information.
2. Check every 8 hours.
3. Brake functions
4. Hydraulic fluid
5. Tire pressure
6. Engine air filter
7. Engine oil
8. Fan belt
9. Battery
10. Radiator screen
11. Engine coolant
12. Engine oil level
13. Fuel
14. Read the *Operator's Manual*.
15. Fuel/Water separator
16. Fluids
17. Capacity
18. Fluid interval (hours)
19. Filter interval (hours)

Setup

Loose Parts

Use the chart below to verify that all parts have been shipped.

Procedure	Description	Qty.	Use
1	No parts required	–	Prepare the machine.
2	No parts required	–	Adjust the control-arm position.
3	Right front hose guide Left front hose guide	1 1	Install the cutting units.
4	Cutting-unit kickstand	1	Install the cutting-unit kickstand.
5	Production year decal	1	Apply the production year decal.

Media and Additional Parts

Description	Qty.	Use
Operator's Manual	1	Read the manuals before operating the machine.
Engine owner’s manual	1	Use the manual to reference engine information.

1

Preparing the Machine

No Parts Required

Procedure

1. Park the machine on a level surface, lower the cutting units, and engage the parking brake.
2. Shut off the engine, remove the key, and wait for all moving parts to stop.
3. Check the tire air pressure before use; refer to Checking the Tire Air Pressure (page 58).

   Note: The tires are overinflated for shipping. Adjust the tire air pressure before operating the machine.
4. Check the hydraulic-fluid level; refer to Checking the Hydraulic-Fluid Level (page 63).
5. Grease the machine; refer to Greasing the Bearings and Bushings (page 46).

   Important: **Failure to properly grease the machine will result in premature failure of critical parts.**
6. Open the hood and check the coolant level; refer to Checking the Coolant Level (page 60).
7. Check the level of the engine-oil level, and close and latch the hood; refer to Checking the Level of the Engine Oil (page 49).

   Note: The engine ships with oil in the crankcase; however, check the oil level before and after the engine is first started.

2

Adjusting the Control-Arm Position

No Parts Required

Procedure

You can adjust the control-arm position your comfort.

1. Loosen the 2 bolts securing the control arm to the retaining bracket (Figure 3).

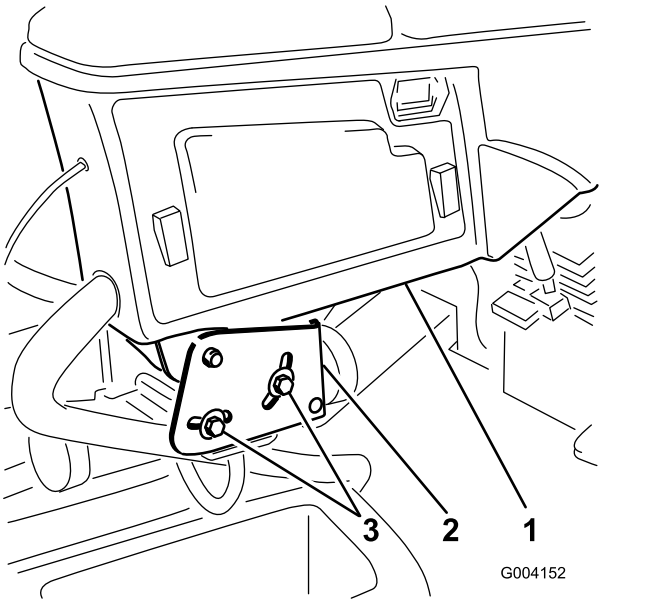

Figure 3

1. Control arm
2. Retaining brackets
3. Bolts (2)

2. Rotate the control arm to the desired position and tighten the 2 bolts.

3

Installing the Cutting Units

Parts needed for this procedure:

1	Right front hose guide
1	Left front hose guide

Preparing the Machine

1. Remove the reel motors from the shipping brackets.
2. Remove and discard the shipping brackets.
3. At each cutting unit lift arm, remove the snapper pin that secures the cap to the lift arm pivot yoke, and remove the cap (Figure 4).

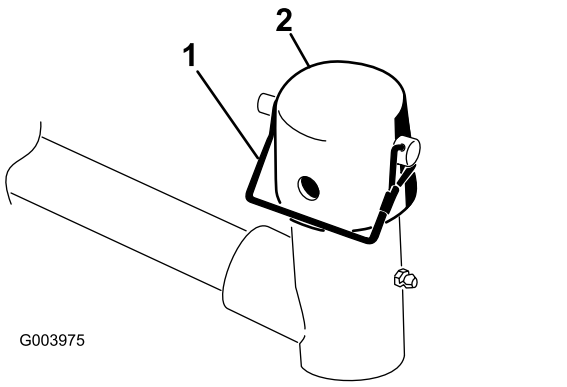

Figure 4

1. Snapper pin
2. Cap

Preparing the Cutting Units

1. Remove the cutting units from the cartons.
2. Assemble and adjust as described in the cutting unit *Operator's Manual*.
3. Make sure that the counterweight (Figure 5) is installed at the proper end of the cutting unit as described in the cutting unit *Operator's Manual*.

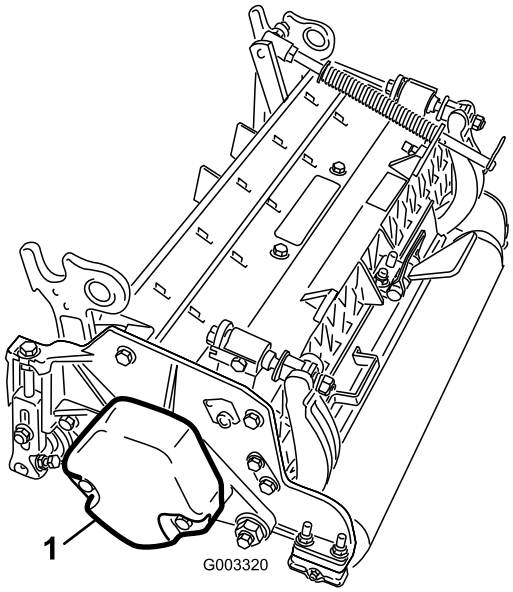

g003320

Figure 5

1. Counterweight

Positioning the Turf Compensating Spring and Installing the Hose Guide

Cutting Units 4

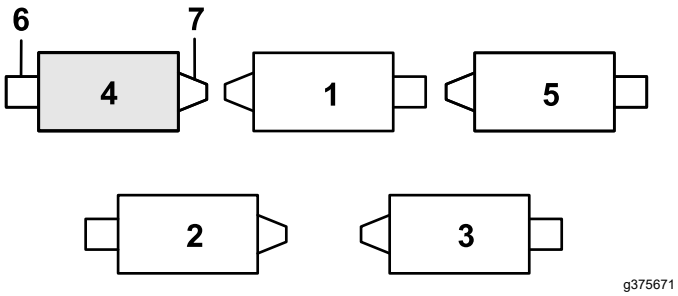

g375671

Figure 6

1. Cutting unit 1
2. Cutting unit 2
3. Cutting unit 3
4. Cutting unit 4
5. Cutting unit 5
6. Reel motor
7. Weight

1. If the hairpin is installed in the rear hole of the compensation-spring rod—remove the hairpin and insert it in the hole next to the bracket (Figure 7).

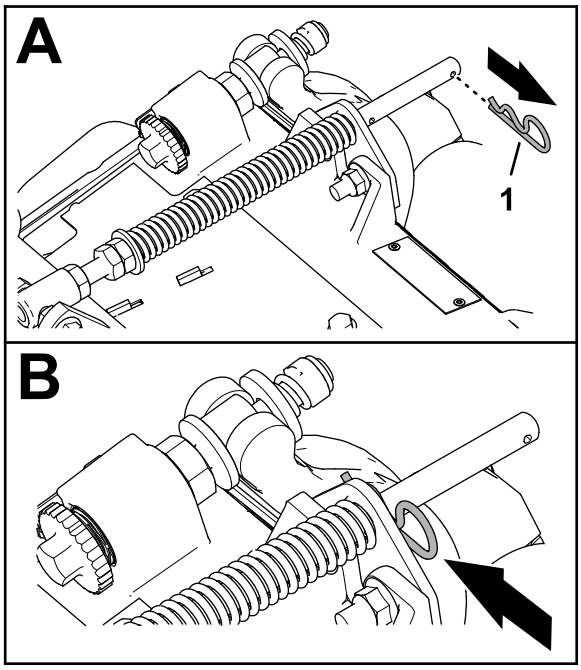

g375689

Figure 7

1. Hairpin

2. Remove the 2 flange locknuts (3/8 inch) and 2 carriage bolts (3/8 x 1-1/4 inches) that secure the turf-compensator bracket to the cutting-unit frame (Figure 8).

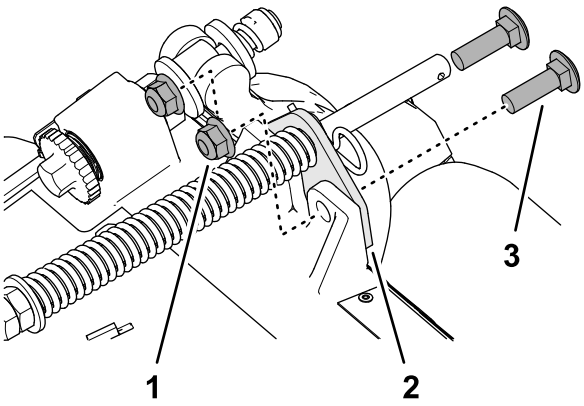

g375690

Figure 8

1. Carriage bolt (3/8 x 1-1/4 inches)
2. Turf-compensator bracket
3. Flange locknut (3/8 inch)

3. Remove the flange locknut (3/8 inch) that secures the capscrew of the turf compensation spring to the right tab of the carrier frame, and remove the compensation spring from the cutting unit (Figure 9).

   Note: Do not remove the flange serrated nut from the capscrew.

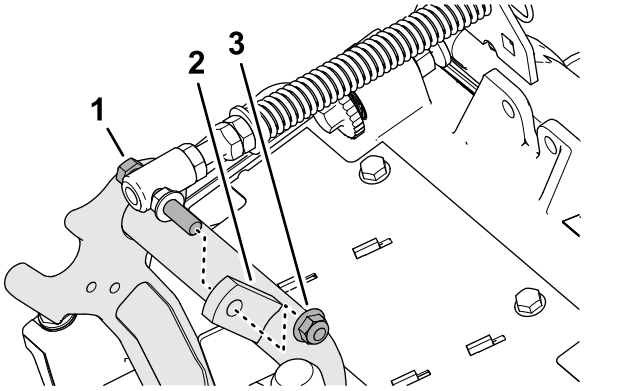

Figure 9

1. Capscrew
2. Right tab (Carrier frame)
3. Flange locknut (3/8 inch)

4. Assemble the capscrew of the turf compensation spring to the right tab of the carrier frame (Figure 10) with the flange locknut (3/8 inch).

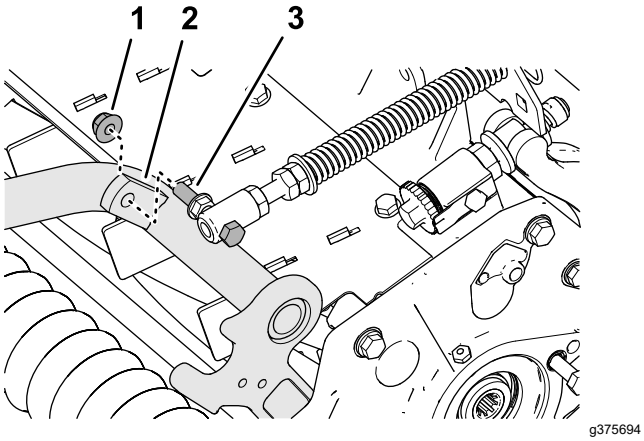

Figure 10

1. Flange locknut (3/8 inch)
2. Right tab (Carrier frame)
3. Capscrew

5. Align the studs of the left hose guide with the holes in the cutting-unit frame and the turf-compensator bracket (Figure 11).

   Note: The support loop of the hose guide aligns toward the centerline of the machine.

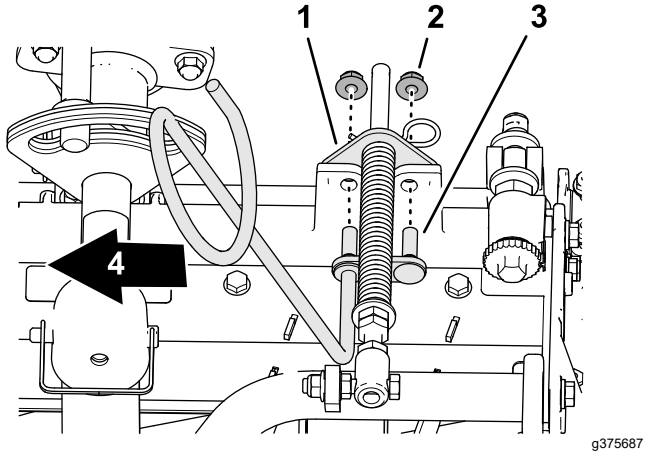

Figure 11

1. Turf-compensator bracket
2. Flange locknut (3/8 inch)
3. Stud (hose guide)
4. Inboard

6. Assemble the hose guide and turf-compensator bracket to the cutting-unit frame with the 2 flange locknuts (3/8 inch).
7. Torque the locknuts and bolts to 37 to 45 N·m (27 to 33 ft-lb).

Installing the Hose Guide

Cutting Units 5

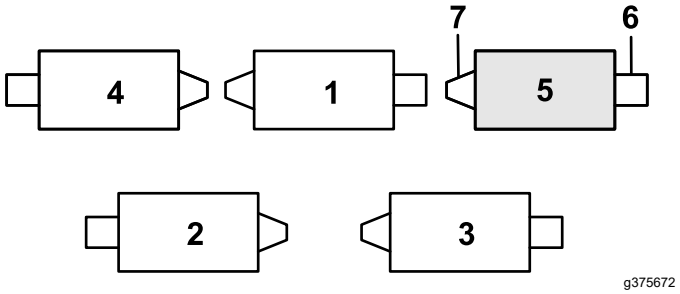

Figure 12

1. Cutting unit 1
2. Cutting unit 2
3. Cutting unit 3
4. Cutting unit 4
5. Cutting unit 5
6. Reel motor
7. Weight

1. If the hairpin is installed in the rear hole of the compensation-spring rod—remove the hairpin and insert it in the hole next to the bracket (Figure 12).

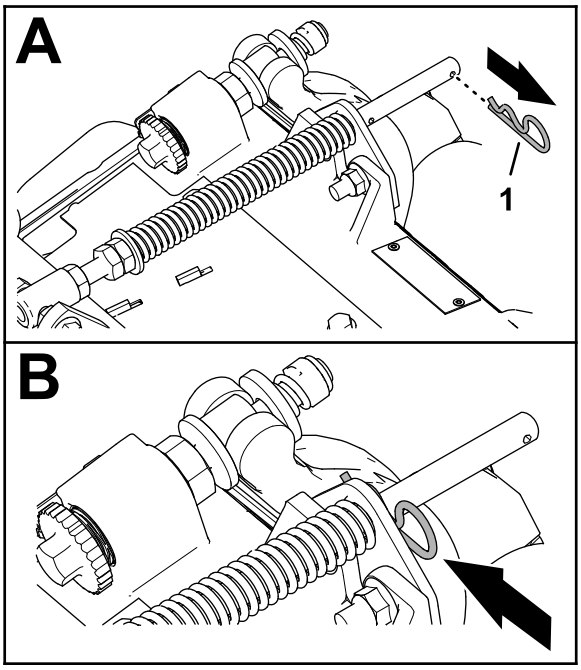

g375689

Figure 13

1. Hairpin

2. Remove the 2 flange locknuts (3/8 inch) and 2 carriage bolts (3/8 x 1-1/4 inches) that secure the turf-compensator bracket to the cutting-unit frame (Figure 14).

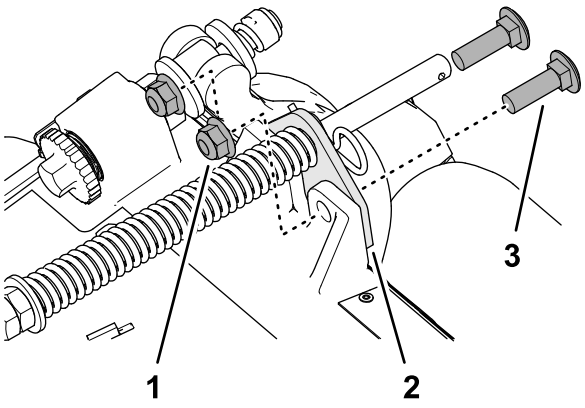

g375690

Figure 14

1. Carriage bolt (3/8 x 1-1/4 inches)
2. Turf-compensator bracket
3. Flange locknut (3/8 inch)

3. Align the studs of the right hose guide with the holes in the cutting-unit frame and the turf-compensator bracket (Figure 15).

   Note: Ensure that the support loop of the hose guide aligns toward the centerline of the machine.

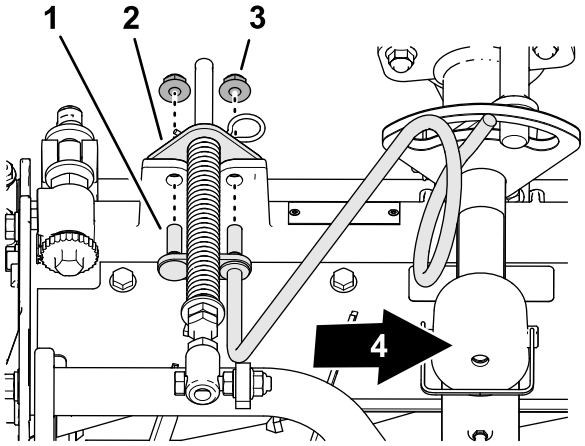

g375688

Figure 15

1. Stud (hose guide)
2. Turf-compensator bracket
3. Flange locknut (3/8 inch)
4. Inboard

4. Assemble the hose guide and turf-compensator bracket to the cutting-unit frame with the 2 flange locknuts (3/8 inch).
5. Torque the locknuts to 37 to 45 N·m (27 to 33 ft-lb).

Positioning the Turf Compensating Spring

Cutting Unit 2

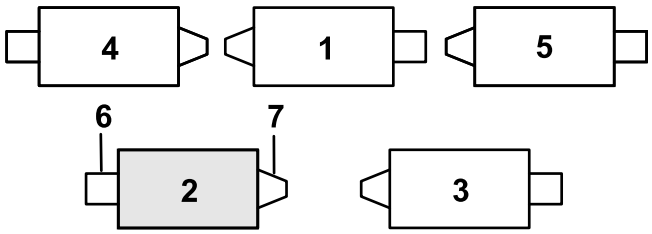

g379514

Figure 16

1. Cutting unit 1
2. Cutting unit 2
3. Cutting unit 3
4. Cutting unit 4
5. Cutting unit 5
6. Reel motor
7. Weight

1. If the hairpin is installed in the rear hole of the compensation-spring rod—remove the hairpin and insert it in the hole next to the bracket (Figure 17).

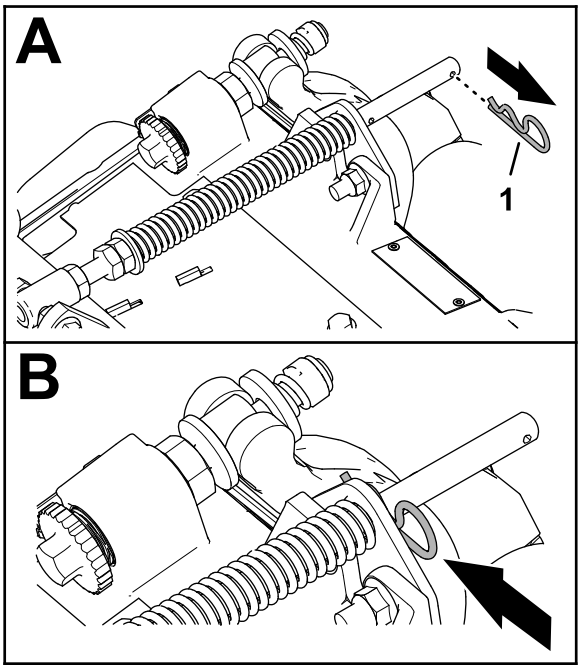

g375689

Figure 17

1. Hairpin

2. Remove the 2 flange locknuts (3/8 inch) and 2 carriage bolts (3/8 x 1-1/4 inches) that secure the turf-compensator bracket to the cutting-unit frame (Figure 18).

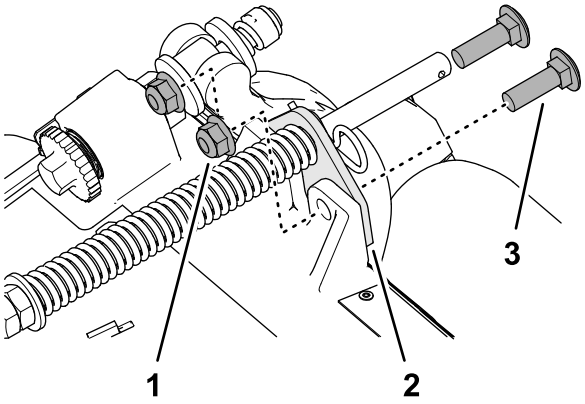

g375690

Figure 18

1. Carriage bolt (3/8 x 1-1/4 inches)
2. Turf-compensator bracket
3. Flange locknut (3/8 inch)

3. Remove the flange locknut (3/8 inch) that secures the capscrew of the turf compensation spring to the right tab of the carrier frame, and remove the compensation spring from the cutting unit (Figure 19).

   Note: Do not remove the flange serrated nut from the capscrew.

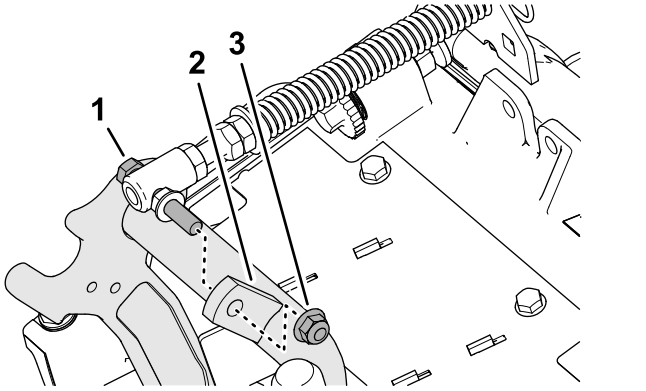

g375691

Figure 19

1. Capscrew
2. Right tab (Carrier frame)
3. Flange locknut (3/8 inch)

4. Assemble the capscrew of the turf compensation spring to the right tab of the carrier frame (Figure 20) with the flange locknut (3/8 inch).

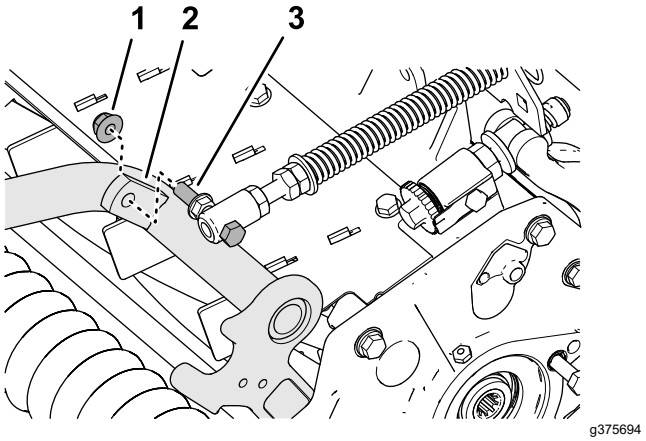

g375694

Figure 20

1. Flange locknut (3/8 inch)
2. Right tab (Carrier frame)
3. Capscrew

5. Align the holes in the turf-compensator bracket with the holes in the cutting-unit frame (Figure 21).

   Note: The support loop of the hose guide aligns toward the centerline of the machine.

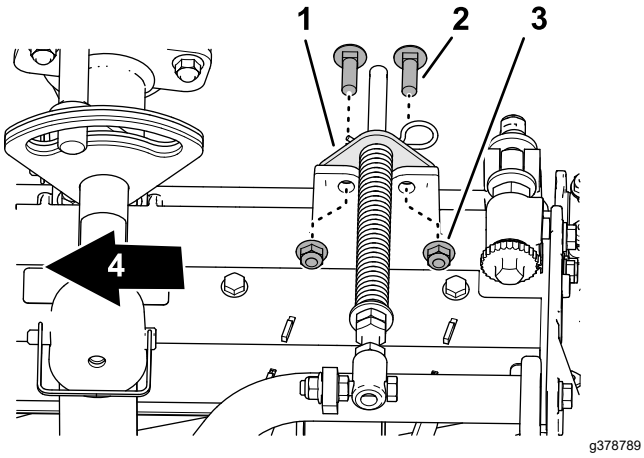

Figure 21

1. Turf-compensator bracket
2. Carriage bolt (3/8 x 1-1/4 inches)
3. Flange locknut (3/8 inch)
4. Inboard

6. Assemble the turf-compensator bracket to the cutting-unit frame with the 2 carriage bolts (3/8 x 1-1/4 inches) and 2 flange locknuts (3/8 inch).
7. Torque the locknuts and bolts to 37 to 45 N·m (27 to 33 ft-lb).

Installing the Kickstand

For each cutting unit, secure the kickstand to the chain bracket with the snapper pin (Figure 22).

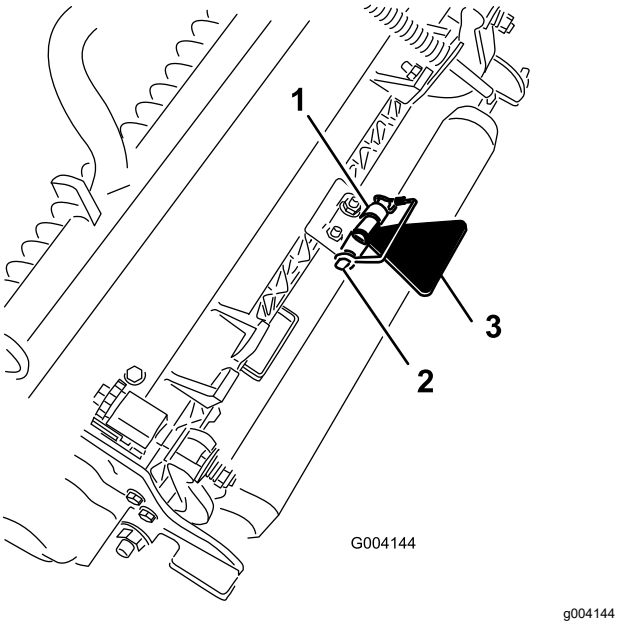

Figure 22

1. Chain bracket
2. Snapper pin
3. Cutting-unit kickstand

Installing the Front Cutting Units to the Lift Arms

1. Slide a cutting unit under the lift arm (Figure 23).

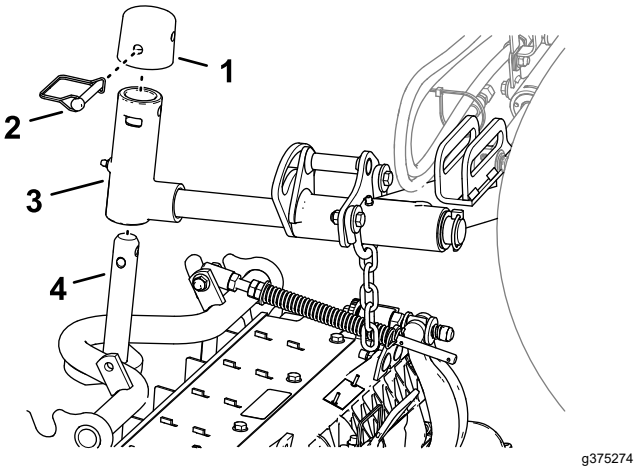

Figure 23

1. Cap
2. Snapper pin
3. Pivot yoke
4. Carrier frame shaft

2. Assemble the pivot yoke onto the carrier frame shaft.
3. Assemble the cap to the pivot yoke, and align the holes in the carrier frame shaft, pivot yoke, and cap.
4. Secure the cap and the carrier-frame shaft to the pivot yoke with the snapper pin.
5. Lock the cutting-unit pivot for cutting grass on a hill side; refer to Locking the Cutting-Unit Pivot for Cutting Grass on a Hill Side (page 17).

Installing the Rear Cutting Units to the Lift Arms

Cutting Units adjusted for a 1.2 cm (3/4 inch) or Higher Height of Cut

1. Slide a cutting unit under the lift arm (Figure 24).

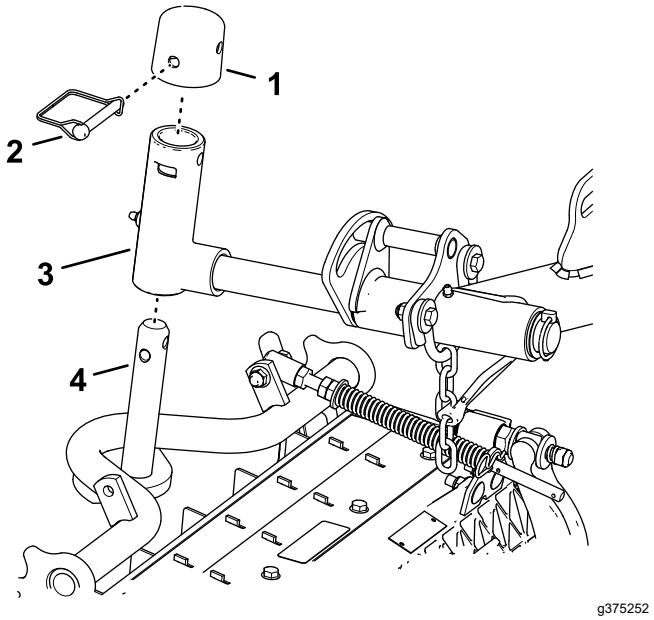

Figure 24

1. Cap
2. Snapper pin
3. Pivot yoke
4. Carrier frame shaft

2. Assemble the pivot yoke onto the carrier frame shaft.
3. Assemble the cap to the pivot yoke and align the holes in the carrier frame shaft, pivot yoke, and cap.
4. Secure the pivot arm shaft and cap to the carrier frame shaft with the snapper pin.
5. Lock the cutting-unit pivot for cutting grass on a hill side; refer to Locking the Cutting-Unit Pivot for Cutting Grass on a Hill Side (page 17).
6. Repeat steps 1 and 2 for the other rear cutting unit.

Installing the Rear Cutting Units to the Lift Arms

Cutting Units adjusted for a 1.2 cm (3/4 inch) or Lower Height of Cut

1. Remove the lynch pin and washer securing the pivot yoke to the lift arm and slide the shaft out of the lift arm (Figure 25).

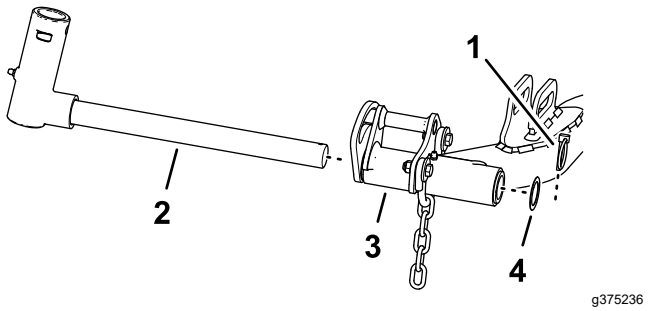

Figure 25

1. Lynch pin
2. Pivot yoke
3. Lift arm (rear cutting unit)
4. Washer

2. Assemble the pivot yoke onto the carrier frame shaft (Figure 26).

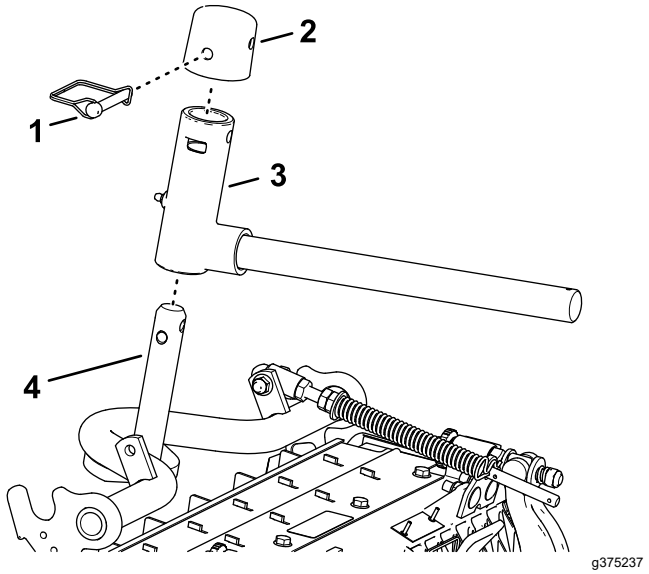

Figure 26

1. Cap
2. Snapper pin
3. Pivot yoke
4. Carrier frame shaft

3. Assemble the cap to the pivot yoke, and align the holes in the carrier frame shaft, pivot yoke, and cap.
4. Secure the pivot yoke and cap to the carrier frame shaft with the snapper pin.
5. Lock the cutting-unit pivot for cutting grass on a hill side; refer to Locking the Cutting-Unit Pivot for Cutting Grass on a Hill Side (page 17).
6. Slide a cutting unit under the lift arm (Figure 27).

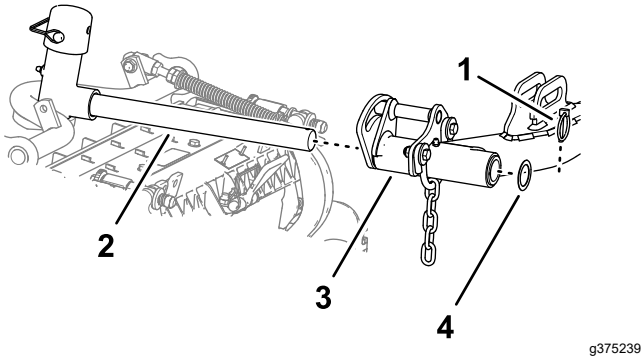

Figure 27

1. Lynch pin
2. Lift-arm shaft
3. Lift arm
4. Washer

7. Insert the pivot yoke into the lift arm, and secure shaft to the arm with the lynch pin and washer.
8. Repeat steps 1 through 7 for the other rear cutting unit.

Locking the Cutting-Unit Pivot for Cutting Grass on a Hill Side

Lock the cutting-unit pivots to prevent the cutting units from rotating downhill when cutting across the face of a hill. Use the hole in the pivot yoke (Figure 28) lock the cutting unit. Use the slot for a steering cutting unit.

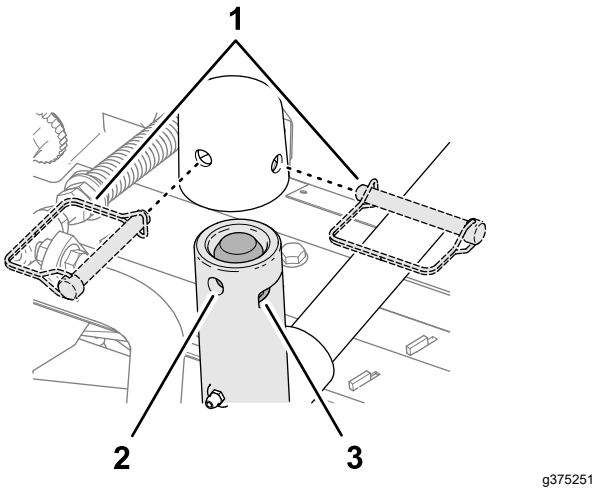

Figure 28

1. Snapper-pin positions
2. Hole (pivot yoke)
3. Slot (pivot yoke)

Installing the Cutting Unit Lift-Arm Chains

Secure the lift-arm chain to the chain bracket with the snapper pin (Figure 29).

Note: Use the number of chain links described in the cutting unit *Operator's Manual*.

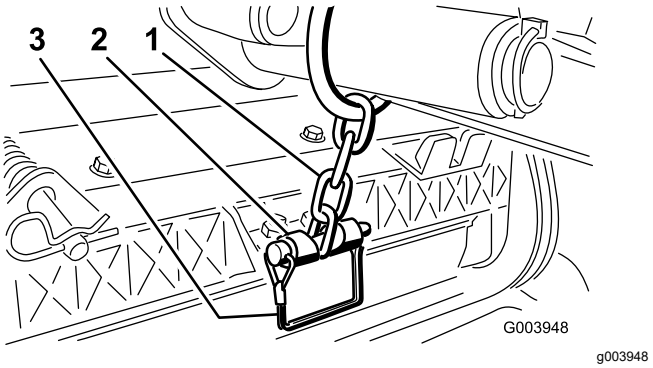

Figure 29

1. Lift-arm chain
2. Chain bracket
3. Snapper pin

Installing the Reel Motors

1. Coat the spline shaft of the reel motor with clean grease.
2. Oil the reel motor O-ring and install it onto the motor flange.
3. Install the motor by rotating it clockwise so that the motor flanges clear the bolts (Figure 30).

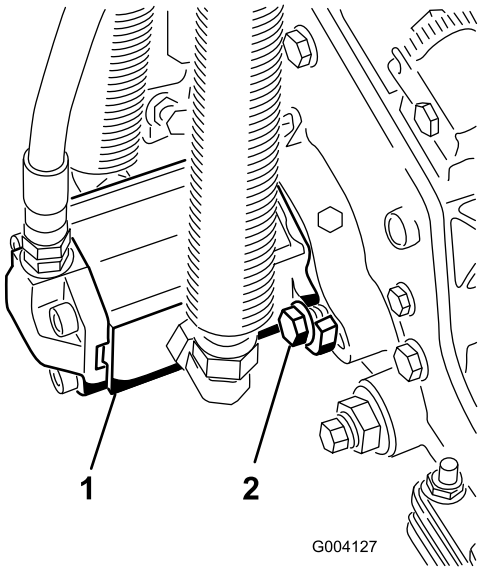

Figure 30

1. Reel-drive motor
2. Mounting bolts

4. Rotate the motor counterclockwise until the flanges encircle the bolts, and then tighten the bolts.

   Important: **Make sure that the reel motor hoses are not twisted, kinked, or at risk of being pinched.**
5. Torque the mounting bolts to (27 to 33 ft-lb).

4

Using the Cutting-Unit Kickstand

Parts needed for this procedure:

1	Cutting-unit kickstand

Procedure

Whenever you need to tip the cutting unit to expose the bedknife/reel, prop up the rear of the cutting unit with the kickstand to make sure that the nuts on the back end of the bedbar-adjusting screws are not resting on the work surface (Figure 31).

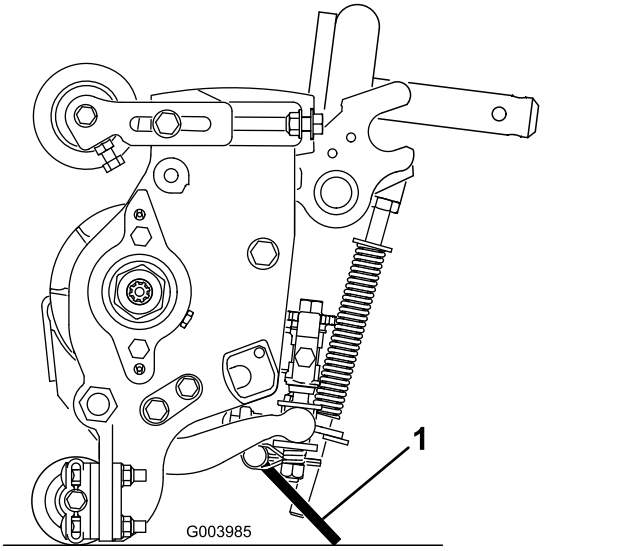

g003985

Figure 31

1. Cutting-unit kickstand

Secure the kickstand to the chain bracket with the snapper pin (Figure 32).

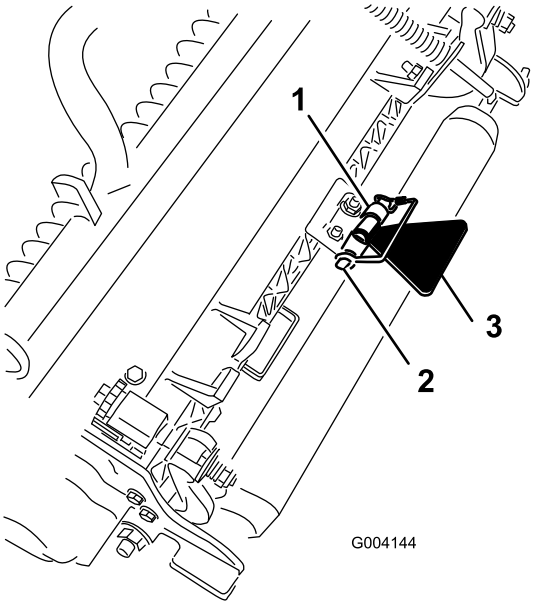

g004144

Figure 32

1. Chain bracket
2. Snapper pin
3. Cutting-unit kickstand

5

Applying the Production Year Decal

Parts needed for this procedure:

1	Production year decal

Procedure

1. Use rubbing alcohol and a clean rag to clean the floor bracket area next to the serial plate, and allow the bracket to dry (Figure 33).

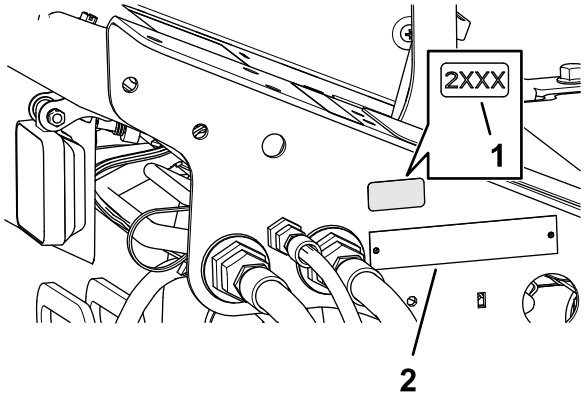

g375554

Figure 33

1. Year of production decal
2. Serial plate

2. Remove the backing from the year of production decal.
3. Apply the decal to the floor bracket.

Product Overview

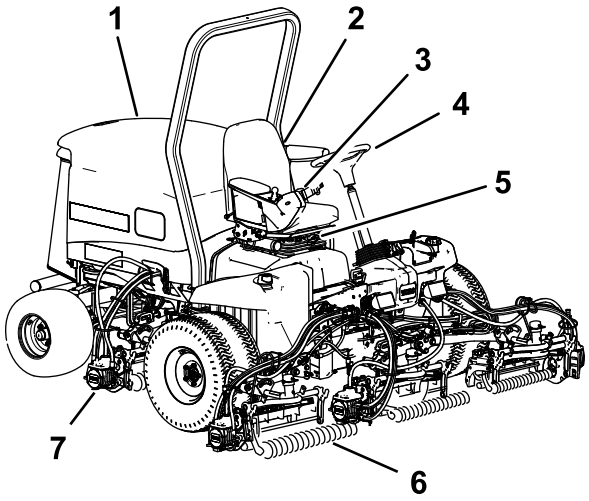

g216864

Figure 34

1. Engine hood
2. Seat
3. Control arm
4. Steering wheel
5. Seat adjustments
6. Front cutting units
7. Rear cutting units

Controls

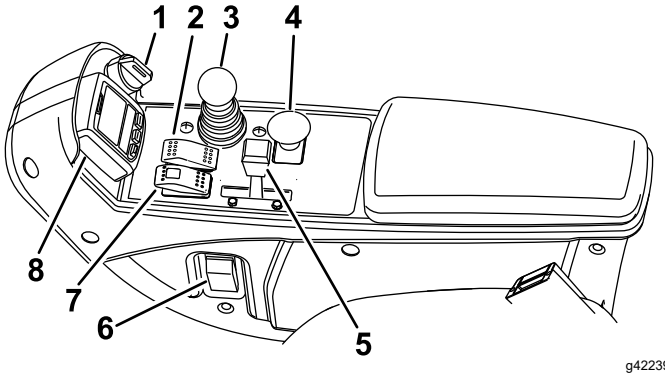

g422390

Figure 35

1. Key switch
2. Cruise control
3. Lower mow/raise control lever
4. PTO switch
5. Throttle lever
6. Headlight switch
7. Parking-brake switch
8. InfoCenter

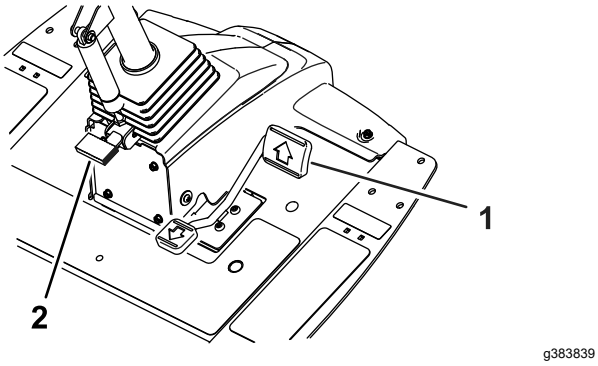

Figure 36

1. Traction pedal
2. Tilt steering pedal

Throttle Control

Move the throttle-control lever (Figure 35) forward to increase the engine speed and rearward to decrease speed.

Traction Pedal

The traction pedal (Figure 36) controls the forward and reverse operation. Press the top of the pedal to move forward and the bottom to move rearward. Ground speed depends on how far you press the pedal. For no load, maximum ground speed, fully press the pedal while the throttle is in the FAST position.

To stop, reduce foot pressure on the traction pedal and allow it to return to the center position.

Cruise-Control Switch

The cruise-control switch has 3 positions: OFF, ON, and ENGAGE.

To turn on the cruise control, pivot the switch to the middle position.

To engage the cruise control, briefly pivot the switch forward. When cruise control is engaged, the cruise control screen will appear on the InfoCenter. Use the InfoCenter buttons to adjust the cruise control speed in 0.8 km/h (0.5 mph) increments.

Tilt-Steering Pedal

To tilt the steering wheel toward you, press the foot pedal (Figure 36) down, and pull the steering tower toward you to the most comfortable position and then release the pedal.

Key Switch

The key switch (Figure 35) has 3 positions: OFF, ON/PREHEAT, and START.

Power-takeoff (PTO) Switch

When the PTO switch is engaged, the machine is in MOW mode, which allows you to drive up to 13 km/h (8 mph) when the maximum speed is not limited.

When the PTO switch is not engaged (Figure 37), the machine is in TRANSPORT mode, which allows you to drive up to 16 km/h (10 mph) when the maximum speed is not limited.

Note: Use the protected menus in the InfoCenter to set the maximum speed for each mode.

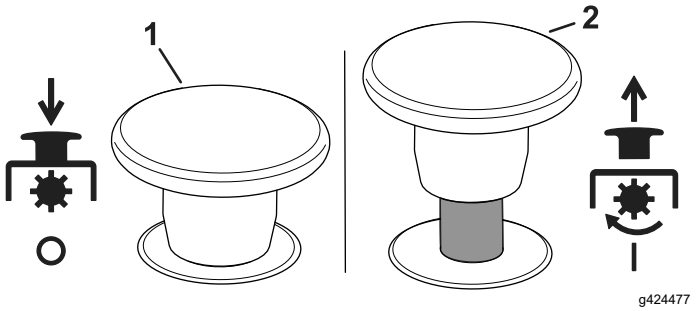

Figure 37

1. Disengaged
2. Engaged

Parking Brake

To engage the parking brake, (Figure 35) pivot the switch forward on the console. The red light on the switch turns on when it is set. To release the parking brake, pivot the switch backward.

Activating the parking-brake switch causes the traction to automatically decelerate, regardless of traction pedal position, and engage the parking brake as soon as the machine comes to a stop.

Once the engine has been shut off and the machine is not moving, the parking brake engages, regardless of parking-brake switch position.

Lower Mow/Raise Control Lever

This lever (Figure 35) raises and lowers the cutting units.

To lower the cutting units, push the lever forward.

When the PTO is engaged and the cutting units are lowered, the cutting units start spinning. If the cutting units are lowered *before* the PTO is engaged, the cutting units will not start spinning.

InfoCenter

The InfoCenter LCD display shows information about your machine, such as the operating status, various

diagnostics, and other information about the machine (Figure 35).

The screens that display, depend on which buttons you select. The purpose of each button may change depending on what is required at the time.

Headlight Switch

Pivot the switch upward to turn on the headlights (Figure 35).

Hydraulic-Filter-Restriction Indicator

The hydraulic-filter-restriction indicator alerts you when the hydraulic filters must be changed; refer to Replacing the Hydraulic Filters (page 63).

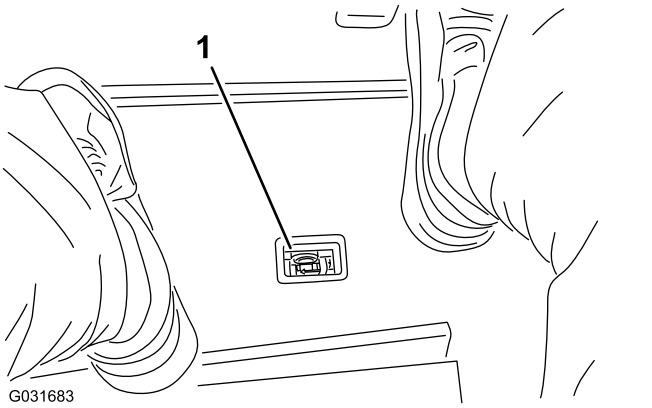

Figure 38

1. Hydraulic-filter-restriction indicator

Power Point

The power point (Figure 39) is a 12 V power supply for electronic devices.

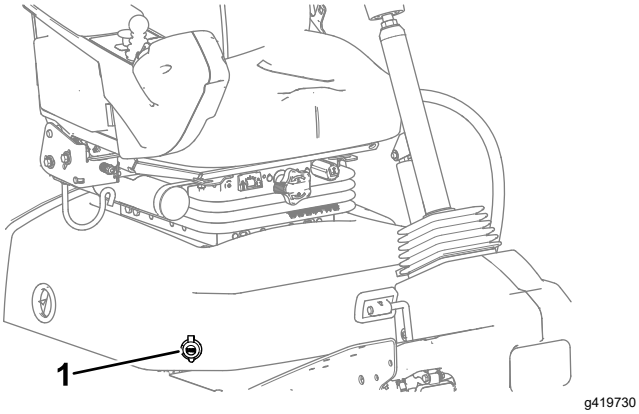

Figure 39

1. Power point

Backlap Levers

Use the backlap levers in conjunction with the lower mow/raise control lever for backlapping the reels (Figure 40).

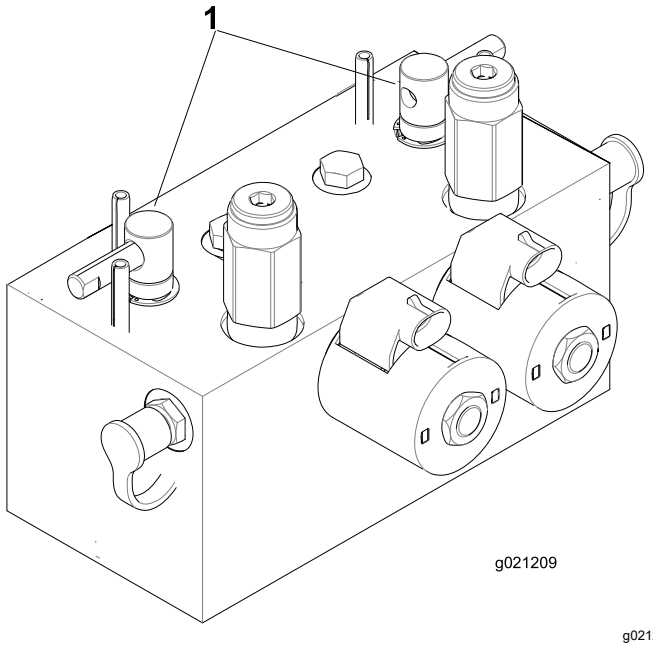

Figure 40

1. Backlap levers

Seat Controls

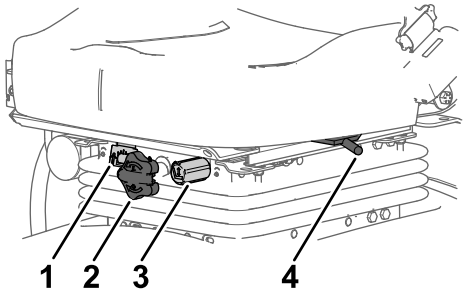

Figure 41

1. Weight gauge
2. Weight-adjusting knob
3. Height-adjusting knob
4. Seat-position lever

Weight-Adjusting Knob

Rotate the weight-adjusting knob until your weight is displayed in the window of the weight gauge.

Height-Adjusting Knob

Rotate the height-adjusting knob to change the height of the seat.

Seat-Position Lever

Pull the seat-position lever (Figure 41) to move the seat forward and rearward. Release the lever to lock the seat position.

Specifications

Note: Specifications and design are subject to change without notice.

Transport width	233 cm (92 inches)
Width of cut	254 cm (100 inches)
Length	282 cm (111 inches)
Height	160 cm (63 inches)
Weight	1222 kg (2,693 lb)
Engine	Kubota 35.5 hp
Fuel tank capacity	53 L (14 US gallons)
Transport speed	0 to 16 km/h (0 to 10 mph)
Mowing speed	0 to 13 km/h (0 to 8 mph)

Attachments/Accessories

A selection of Toro approved attachments and accessories is available for use with the machine to enhance and expand its capabilities. Contact your Authorized Service Dealer or authorized Toro distributor or go to www.Toro.com for a list of all approved attachments and accessories.

To ensure optimum performance and continued safety certification of the machine, use only genuine Toro replacement parts and accessories. Replacement parts and accessories made by other manufacturers could be dangerous, and such use could void the product warranty.

Operation

Before Operation

Before Operation Safety

General Safety

- Never allow children or untrained people to operate or service the machine. Local regulations may restrict the age of the operator. The owner is responsible for training all operators and mechanics.
- Become familiar with the safe operation of the equipment, operator controls, and safety signs.
- Before you leave the operator's position, do the following:
  - Park the machine on a level surface.
  - Disengage and lower the cutting units.
  - Engage the parking brake.
  - Shut off the engine and remove the key.
  - Wait for all movement to stop.
  - Allow the machine to cool before adjusting, servicing, cleaning, or storing it.
- Know how to stop the machine and shut off the engine quickly.
- Do not operate the machine without all guards and other safety protective devices in place and functioning properly on the machine.
- Before mowing, always inspect the machine to ensure that the cutting units are in good working condition.
- Inspect the area where you will use the machine and remove all objects that the machine could throw.
- This product generates an electromagnetic field. If you wear an implantable electronic medical device, consult your health care professional before using this product.

Fuel Safety

- Use extreme care in handling fuel. It is flammable and its vapors are explosive.
- Extinguish all cigarettes, cigars, pipes, and other sources of ignition.
- Use only an approved fuel container.
- Do not remove the fuel cap or fill the fuel tank while the engine is running or hot.
- Do not add or drain fuel in an enclosed space.
- Do not store the machine or fuel container where there is an open flame, spark, or pilot light, such as on a water heater or other appliance.
- If you spill fuel, do not attempt to start the engine; avoid creating any source of ignition until the fuel vapors have dissipated.

Performing Daily Maintenance

Service Interval: Before each use or daily

Before starting the machine each day, perform the Each Use/Daily procedures listed in Maintenance (page 41).

Fuel Specification

Use only clean, fresh diesel fuel or biodiesel fuels with low (<500 ppm) or ultra low (<15 ppm) sulfur content. The minimum cetane rating should be 40. Purchase fuel in quantities that can be used within 180 days to ensure fuel freshness.

Use summer grade diesel fuel (No. 2-D) at temperatures above -7°C (20°F) and winter grade (No. 1-D or No. 1-D/2-D blend) below that temperature. Use of winter grade fuel at lower temperatures provides lower flash point and cold flow characteristics which eases starting and reduces fuel filter plugging.

Use of summer grade fuel above -7°C (20°F) contributes toward longer fuel pump life and increased power compared to winter grade fuel.

Important: **Do not use kerosene or gasoline instead of diesel fuel. Failure to observe this caution damages the engine.**

Biodiesel Ready

This machine can also use a biodiesel blended fuel of up to B20 (20% biodiesel, 80% petrodiesel). The petrodiesel portion should be low or ultra low sulfur. Observe the following precautions:

- The biodiesel portion of the fuel must meet specification ASTM D6751 or EN14214.
- The blended fuel composition should meet ASTM D975 or EN590.
- Painted surfaces may be damaged by biodiesel blends.
- Use B5 (biodiesel content of 5%) or lesser blends in cold weather.
- Monitor seals, hoses, gaskets in contact with fuel as they may be degraded over time.

- Fuel filter plugging may be expected for a time after converting to biodiesel blended.
- Contact your distributor if you wish for more information on biodiesel.

Fuel Tank Capacity

53 L (14 US gallons)

Adding Fuel

1. Park the machine on a level surface, lower the cutting units, engage the parking brake, shut off the engine, and remove the key.
2. Using a clean rag, clean area around fuel-tank cap.
3. Remove the cap from the fuel tank (Figure 42).

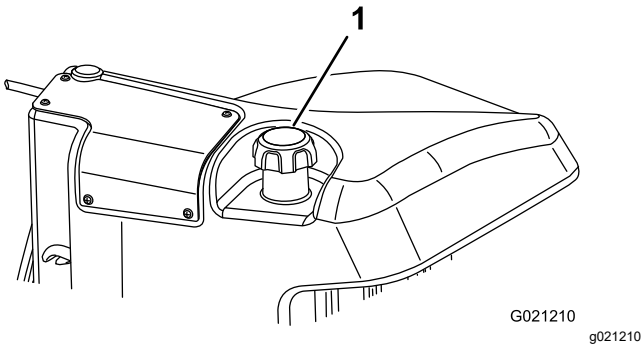

Figure 42

1. Fuel-tank cap

4. Fill the tank until the level is 6 to 13 mm (1/4 to 1/2 inch) below the bottom of the filler neck.
5. Install the fuel-tank cap tightly after filling the tank.

   Note: If possible, fill the fuel tank after each use. This minimizes possible buildup of condensation inside the fuel tank.

Checking the Interlock Switches

Service Interval: Before each use or daily

⚠ CAUTION

If safety interlock switches are disconnected or damaged, the machine could operate unexpectedly, causing personal injury.

- **Do not tamper with the interlock switches.**
- **Check the operation of the interlock switches daily and replace any damaged switches before operating the machine.**

Important: **If your machine fails any of the interlock switch checks, contact your authorized Toro distributor.**

Preparing the Machine

1. Drive the machine slowly to an open area.
2. Lower the cutting units, shut off the engine, and engage the parking brake.

Checking the Traction Pedal Start-Interlock

1. Sit in the operator's seat.
2. Engage the parking brake.
3. Press the PTO switch to the DISENGAGE position.
4. Press the traction pedal.
5. Rotate the key to the START position.

   Note: The starter should not crank the engine with the traction pedal pressed.

Checking the PTO-Start Interlock

1. Sit in the operator's seat.
2. Pull up the PTO switch to the ENGAGE position.
3. Rotate the key to the START position.

   Note: The engine should not start with the PTO switch in the ENGAGE position.

Checking the PTO-Run Interlock

1. Sit in the operator's seat.
2. Press the PTO switch to the DISENGAGE position.
3. Start the engine.
4. Pull up the PTO switch to the ENGAGE position.
5. Lower the cutting units to engage the PTO.
6. Rise from the seat.

Note: The PTO should not run when you are out of the operator's seat.

Note: Do not allow the cutting units to spin for more than a couple seconds during this test to prevent unnecessary wear.

Checking the Parking Brake and Traction Pedal Run-Interlock

1. Sit in the operator's seat.
2. Engage the parking brake.
3. Press the PTO switch to the DISENGAGE position.
4. Start the engine.
5. Press the traction pedal.

Note: There should be no machine response when you press the traction pedal while the parking brake is engaged. An advisory message should appear on the InfoCenter.

Checking the Automatic Parking Brake Engage

1. Sit in the operator's seat.
2. Start the engine.
3. Disengage the parking brake.
4. Rise from the seat.

   Note: The red light on the parking-brake switch should illuminate when you are out of the operator's seat, indicating that the parking brake is on.

Checking the Cutting Unit Lower Disable Interlock

1. Sit in the operator's seat.
2. Start the engine.
3. Ensure that the cutting units are lifted to the transport position.
4. Rise from the seat.
5. Lower the cutting units.

   Note: The cutting units should not lower when you are out of the operator's seat.

Using the InfoCenter LCD Display

The InfoCenter LCD display shows information about your machine, such as the operating status, various diagnostics and other information about the machine (Figure 43) There is a splash screen and main information screen of the InfoCenter. You can switch between the splash screen and main information screen, at any time, by pressing any of the InfoCenter buttons and then selecting the appropriate directional arrow.

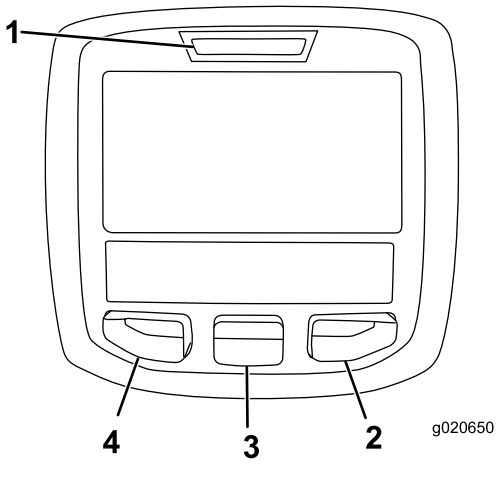

g020650

Figure 43

1. Indicator light
2. Right button
3. Middle button
4. Left button

- Left Button, Menu Access/Back Button—press this button to access the InfoCenter menus. You can use it to back out of any menu you are currently using.
- Middle Button—use this button to scroll down menus.
- Right Button—use this button to open a menu where a right arrow indicates additional content.

Note: The purpose of each button may change depending on what is required at the time. Each button is labeled with an icon displaying its current function.

InfoCenter Icon Description

SERVICE DUE	Indicates when scheduled service should be performed
	Hour meter
	Info icon
	Fast
	Slow
	Fuel level
	Glow plugs are active
	Raise cutting units

InfoCenter Icon Description (cont'd.)

	Lower cutting units
	Operator must sit in seat
	Parking Brake Indicator—indicates when the parking brake is On
H	Identifies the range as High (Transport)
N	Neutral
L	Identifies the range as Low (Mow)
	Coolant Temperature-indicates the engine coolant temperature in either °C or °F
	Temperature (hot)
	PTO is engaged
	Denied or not allowed
	Engine Start
	Stop or shutdown
	Engine
	Key switch
	Indicates when the cutting units are being lowered
	Indicates when the cutting units are being raised
PIN	PIN passcode
CAN	CAN bus
	InfoCenter
Bad	Bad or failed
	Bulb
OUT	Output of TEC controller or control wire in harness
	Switch

InfoCenter Icon Description (cont'd.)

	Operator must release switch
	Operator should change to indicated state
	Warm-up mode
Symbols are often combined to form sentences. Some examples are shown below	
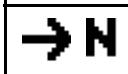	Operator should put machine in neutral
	Engine start denied
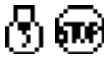	Engine shutdown
	Engine coolant too hot
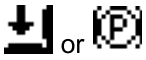	Sit down or set parking brake

Using the Menus

To access the InfoCenter menu system, press the menu access button while at the main screen. This brings you to the main menu. Refer to the following tables for a synopsis of the options available from the menus:

Main Menu	
Menu Item	**Description**
Faults	The Faults menu contains a list of the recent machine faults. Refer to the Service Manual or your Authorized Toro Distributor for more information on the Faults menu and the information contained there.
Service	The Service menu contains information on the machine such as hours of use, counters, and other similar numbers.
Diagnostics	The Diagnostics menu displays the state of each machine switch, sensor, and control output. You can use this to troubleshoot certain issues as it will quickly tell you which machine controls are on and which are off.

Settings	The Settings menu allows you to customize and modify configuration variables on the InfoCenter display.
About	The About menu lists the model number, serial number, and software version of your machine.

Service	
Menu Item	**Description**
Hours	Lists the total number of hours that the machine, engine and PTO have been on, as well as the number of hours the machine has been transported and service due.
Counts	Lists numerous counts the machine has experienced.

Diagnostics	
Menu Item	**Description**
Cutting Units	Indicates the inputs, qualifiers, and outputs for raising and lowering the cutting units.
Hi/Low Range	Indicates the inputs, qualifiers, and outputs for driving in transport mode.
PTO	Indicates the inputs, qualifiers, and outputs for enabling the PTO circuit.
Engine Run	Indicates the inputs, qualifiers, and outputs for starting the engine.

Settings	
Menu Item	**Description**
Units	Controls the units used on the InfoCenter. The menu choices are English or Metric.
Language	Controls the language used on the InfoCenter*.
LCD Backlight	Controls the brightness of the LCD display.
LCD Contrast	Controls the contrast of the LCD display.
Front Backlap Reel Speed	Controls the speed of the front reels in backlap mode.
Rear Backlap Reel Speed	Controls the speed of the rear reels in backlap mode.
Protected Menus 🔒	Allows a person (superintendent/mechanic) authorized by your company with the PIN code to access protected menus.
Protect Settings 🔒	Allows the ability to change the settings in the protected settings
Acceleration 🔒	Low, Medium, and High settings control how quickly the traction speed reacts when you move the traction pedal.
Blade Count 🔒	Controls the number of blades on the reel for reel speed.
Height of cut (HOC) 🔒	Controls the height of cut (HOC) for determining the reel speed.
F Reel RPM 🔒	Displays the calculated reel speed position for the front reels. The reels can also be manually adjusted.
R Reel RPM 🔒	Displays the calculated reel speed position for the rear reels. The reels can also be manually adjusted.
Mow Speed 🔒	Controls the maximum speed while in mow (low range)
Trans. Speed 🔒	Controls the maximum speed while in transport (high range)
Smart Power 🔒	Turns Smart Power on and off
Turnaround	Turns Turnaround on and off

* Only "operator-faced" text is translated. Faults, Service, and Diagnostics screens are "service-faced". Titles are be in the selected language, but menu items are in English.

🔒 Protected under Protected Menus—accessible only by entering PIN

About	
Menu Item	**Description**
Model	Lists the model number of the machine.
SN	Lists the serial number of the machine.
Machine Controller Revision	Lists the software revision of the master controller.
InfoCenter Revision	Lists the software revision of the InfoCenter.
CAN Bus	Lists the machine communication bus status.

Protected Menus

There are operating configuration settings that are adjustable within the Settings Menu of the InfoCenter. To lock these settings, use the Protected Menu.

Note: At the time of delivery, the initial password code is programmed by your distributor.

Accessing Protected Menus

Note: The factory default PIN code for you machine is either 0000 or 1234.

If you changed the PIN code and forgot the code, contact your authorized Toro distributor for assistance.

1. From the MAIN MENU, use the center button to scroll down to the SETTINGS MENU and press the right button (Figure 44).

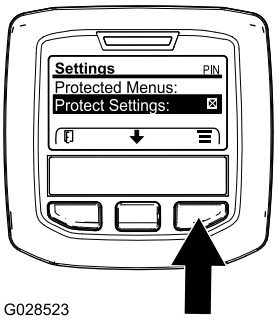

g028523

Figure 44

2. In the SETTINGS MENU, use the center button to scroll down to the PROTECTED MENU and press the right button (Figure 45A).

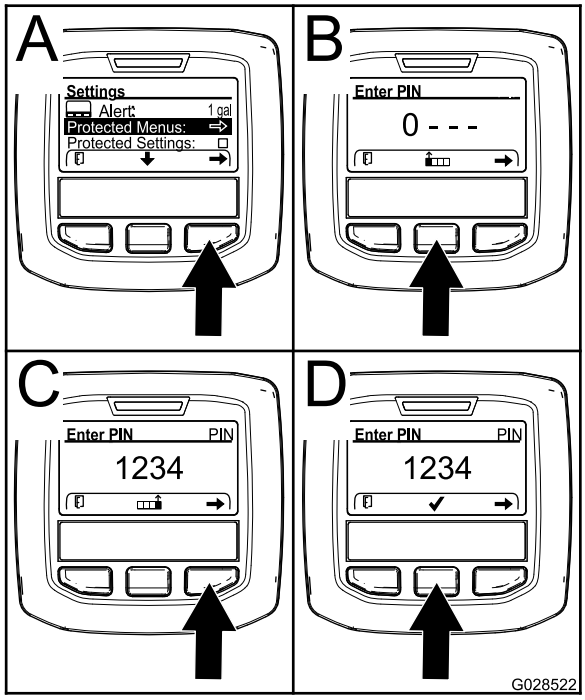

g028522

Figure 45

3. To enter the PIN code, press the center button until the correct first digit appears, then press the right button to move on to the next digit (Figure 45B and Figure 45C). Repeat this step until the last digit is entered and press the right button once more.

4. Press the middle button to enter the PIN code (Figure 45D).

   Wait until the red indicator light of the InfoCenter illuminates.

   Note: If the InfoCenter accepts the PIN code and the protected menu is unlocked, the word “PIN” displays in the upper right corner of the screen.

Note: Rotate the key switch to the OFF position and then to the ON position locks the protected menu.

Viewing and Changing the Protected Menu Settings

1. In the Protected Menu, scroll down to Protect Settings.
2. To view and change the settings without entering a PIN code , use the right button to change the Protect Settings to OFF.
3. To view and change the settings with a PIN code, use the left button to change the Protect Settings to ON, set the PIN code, and turn the key in the ignition switch to the OFF position and then to the ON position.

Setting the Service Due Timer

The service due timer resets the service due hours after a scheduled maintenance procedure is performed.

1. In the Settings Menu, use the center button to scroll down to the PROTECTED MENU and press the right button.
2. Enter PIN; refer to Accessing Protected Menus on the *Operator’s Manual* for your machine.
3. In the Service Menu, navigate to the HOURS MENU.
4. Scroll down to the service symbol .

   Note: If service is currently due, the first icon shows NOW.

5. Below the first icon is the service interval item (time interval, e.g. 250, 500, etc.)

   Note: Service interval is a protected menu item.

6. Highlight the service interval and press the right button.
7. When the new screen appears, confirm RESET SERVICE HOURS—ARE YOU SURE?
8. Select YES(center button) or NO (left button).
9. After you select YES the interval screen clears, and reverts back to the Service Hours selections.

Setting the Blade Count

1. In the Settings Menu, scroll down to Blade Count.
2. Press the right button to change the blade count between 8 or 11 blade reels.

Setting the Height of Cut (HOC)

1. In the Settings Menu, scroll down to HOC.
2. Press the right button to select HOC.
3. Use the center and right button to select the appropriate HOC setting. (If the exact setting is not displayed, select the nearest HOC setting from the list displayed).
4. Press the left button to exit HOC and save the setting.

Setting the Front and Rear Reel Speeds

Although the front and rear reel speeds are calculated by inputting the number of blades, mow speed and HOC into the InfoCenter, the setting can be manually changed to accommodate for different mowing conditions.

1. To change the Reel Speed Settings, scroll down to the F Reel RPM, R Reel RPM, or both.
2. Press the right button to change the reel speed value. As you change the speed setting, the display continues to show the calculated reel speed based on blade count, mow speed and HOC, which was previously entered, but the new value is also displayed.

To Access Protected Display Screens

From the main screen, press the center button once, when the arrows appear above the buttons, press the center button again to scroll through the display screens.

Setting the Maximum Allowed Mow Speed

The selected setting is displayed as an X on the traction-speed bar graph along with the cruise control and pedal stop settings. An X in a bar denotes that the maximum speed is limited by the supervisor (Figure 47 or Figure 49).

Note: This setting is retained in memory and applied to the traction speed until you change it.

1. In the Settings Menu, scroll down to Mow Speed and press the right button.
2. Use the right button to increase the maximum mow speed in 0.8 km/h (0.5 mph) increments between 1.6 and 12.9 km/h (1.0 and 8.0 mph).
3. Use the center button to decrease the maximum mow speed in 0.8 km/h (0.5 mph) increments between 1.6 and 12.9 km/h (1.0 and 8.0 mph).
4. Press the left button to exit.

Setting the Maximum Allowed Transport Speed

The selected setting is displayed as an X on the traction-speed bar graph along with the cruise control and pedal stop settings. An X in a bar denotes that the maximum speed is limited by the supervisor (Figure 47 or Figure 49).

Note: This setting is retained in memory and applied to the traction speed until you change it.

1. In the Settings Menu, scroll down to Transport Speed and press the right button.
2. Use the right button to increase the maximum transport speed in 0.8 km/h (0.5 mph) increments between 8.0 and 16.0 km/h (5.0 and 10.0 mph).
3. Use the center button to decrease the maximum transport speed in 0.8 km/h (0.5 mph) increments between 8.0 and 16.0 km/h (5.0 and 10.0 mph).
4. Press the left button to exit.

Turning the Smart Power ON/OFF

1. In the settings menu, scroll down to Smart Power.
2. Press the right button to switch between ON and OFF.
3. Press the left button to exit.

Setting the Acceleration Mode

1. In the Settings Menu, scroll down to Acceleration.
2. Press the right button to switch between LOW, MEDIUM, and HIGH.
3. Press the left button to exit.

Checking the Hydrostatic Braking Distance

This machine will dynamically brake and stop when you return the traction pedal to neutral.

Note: For smooth deceleration, use your foot to slowly control the traction pedal back to neutral. Do not take your foot off the pedal and allow it to snap

back to the neutral position unless you intend to stop quickly.

The machine should come to a complete stop in approximately 3.7 m (12 ft) from the maximum transport speed of 10 mph.

1. On flat, dry pavement, mark out the start and end of 3.7 m (12 ft).
2. Drive the machine at the maximum transport speed of 16 km/h (10 mph) and remove your foot at the start of the 3.7 m (12 ft).
3. Check if the machine stops within 0.6 m (2 ft) of the end mark (3.7 m or 12 ft).
4. Contact your Toro distributor if the stopping distance of the machine is not within 0.6 m (2 ft) of this distance.

Understanding Displayed Traction Speeds

This machine displays estimated traction speeds in kilometers per hour (km/h) or miles per hour (mph).

Note: The displayed traction speeds are only accurate when the engine speed is set to high idle.

- The instantaneous speed is displayed in the upper left-hand corner of the cruise control and virtual pedal stop screens.
- The traction speeds are estimated, and calibrated to be most accurate at 8.0 km/h (5.0 mph) while mowing. Displayed speeds are accurate when it is 0.8 km/h (0.5 mph) above or below the display speed while driving on dry, flat pavement.
- Contact your authorized Toro distributor if the machine's observed speeds deviate more than 2.4 km/h (1.5 mph) from the displayed speeds.

During Operation

During Operation Safety

General Safety

- The owner/operator can prevent and is responsible for accidents that may cause personal injury or property damage.
- Wear appropriate clothing, including eye protection; long pants; substantial, slip-resistant footwear; and hearing protection. Tie back long hair and do not wear loose clothing or loose jewelry.
- Do not operate the machine while ill, tired, or under the influence of alcohol or drugs.
- Use your full attention while operating the machine. Do not engage in any activity that causes distractions; otherwise, injury or property damage may occur.
- Before you start the engine, ensure that all drives are in neutral, the parking brake is engaged, and you are in the operating position.
- Do not carry passengers on the machine and keep bystanders and children out of the operating area.
- Operate the machine only in good visibility to avoid holes or hidden hazards.
- Avoid mowing on wet grass. Reduced traction could cause the machine to slide.
- Keep your hands and feet away from the cutting units.
- Look behind and down before backing up to be sure of a clear path.
- Use care when approaching blind corners, shrubs, trees, or other objects that may obscure your vision.
- Stop the cutting units whenever you are not mowing.
- Slow down and use caution when making turns and crossing roads and sidewalks with the machine. Always yield the right-of-way.
- Operate the engine only in well-ventilated areas. Exhaust gases contain carbon monoxide, which is lethal if inhaled.
- Do not leave a running machine unattended.
- Before you leave the operator’s position, do the following:
  - Park the machine on a level surface.
  - Disengage and lower the cutting units.
  - Engage the parking brake.
  - Shut off the engine and remove the key.
  - Wait for all movement to stop.
  - Allow the machine to cool before adjusting, servicing, cleaning, or storing it.
- Operate the machine only in good visibility and appropriate weather conditions. Do not operate the machine when there is the risk of lightning.
- Use the cruise control (if equipped) only when you can operate the machine in an open, flat area that is free from obstacles and where the machine can move at a constant speed without interruption.

Rollover Protection System (ROPS) Safety

- Do not remove any of the ROPS components from the machine.
- Ensure that the seat belt is attached and that you can release it quickly in an emergency.

- Always wear your seat belt.
- Check carefully for overhead obstructions and do not contact them.
- Keep the ROPS in safe operating condition by thoroughly inspecting it periodically for damage and keeping all the mounting fasteners tight.
- Replace all damaged ROPS components. Do not repair or alter them.

Slope Safety

- Slopes are a major factor related to loss of control and rollover accidents, which can result in severe injury or death. You are responsible for safe slope operation. Operating the machine on any slope requires extra caution.
- Evaluate the site conditions to determine if the slope is safe for machine operation, including surveying the site. Always use common sense and good judgment when performing this survey.
- Review the slope instructions, listed below, for operating the machine on slopes. Before you operate the machine, review the site conditions to determine whether you can operate the machine in the conditions on that day and at that site. Changes in the terrain can result in a change in slope operation for the machine.
  - Avoid starting, stopping, or turning the machine on slopes. Avoid making sudden changes in speed or direction. Make turns slowly and gradually.
  - Do not operate a machine under any conditions where traction, steering, or stability is in question.
  - Remove or mark obstructions such as ditches, holes, ruts, bumps, rocks, or other hidden hazards. Tall grass can hide obstructions. Uneven terrain could overturn the machine.
  - Be aware that operating the machine on wet grass, across slopes, or downhill may cause the machine to lose traction.
  - Use extreme caution when operating the machine near drop-offs, ditches, embankments, water hazards, or other hazards. The machine could suddenly roll over if a wheel goes over the edge or the edge caves in. Establish a safety area between the machine and any hazard.
  - Identify hazards at the base of the slope. If there are hazards, mow the slope with a pedestrian-controlled machine.
  - If possible, keep the cutting units lowered to the ground while operating on slopes. Raising the cutting units while operating on slopes can cause the machine to become unstable.

Understanding the Operating Characteristics of the Machine

- When you remove your foot from the traction pedal, the machine dynamically brakes to a stop.
- The pedal controls are optimized to provide a reactive yet stable response, allowing you to maintain consistent control over rough terrain, while still allowing for quick, smooth braking.
- The maximum speeds set in the PIN protected menu settings are set by the supervisor to limit the machine's maximum traction speed.
- The achievable traction pedal use, cruise control, and pedal stop traction speeds are all limited by the maximum speeds set in the PIN protected menu.

Operating the Machine

- If an obstacle is in the way, lift the cutting units to mow around it.
- When transporting the machine between work areas, shut off the PTO, and raise the cutting units to the fully upward position.
- Always drive slowly in rough areas.
- Never shut off the machine while driving the machine.

Practice Operating the Machine

- To get familiar with the features of the machine, practice operating the machine.
- Lift the cutting units, disengage the parking brake, press the forward traction pedal, and carefully drive to an open area.
- Practice driving the machine, because it has a hydrostatic transmission and its features can differ from other turf-maintenance machines.
- Practice moving forward and reverse, and starting and stopping the machine. To stop the machine, remove your foot from the traction pedal and let it return to NEUTRAL.

  Note: When going downhill in the machine, you may need to use the reverse pedal to stop.
- Practice driving around obstacles with the cutting units up and down. Be careful when driving between narrow objects so that you do not damage the machine or cutting units.

Using the Traction Pedal

This pedal controls the forward and reverse speed of the machine and the dynamic braking when you return it to neutral.

- The further you push the pedal forward or reverse, the faster the machine moves.
- To control the machine to a smooth stop while transporting or mowing, use your foot to return the traction pedal to neutral at your desired rate.
- To engage maximum braking, remove your foot from the traction pedal, allowing it to return to neutral. The machine dynamically brakes to a stop.

This traction system allows you to customize the acceleration settings for operator comfort and course conditions. Refer to Accessing Protected Menus (page 28) for changing the settings.

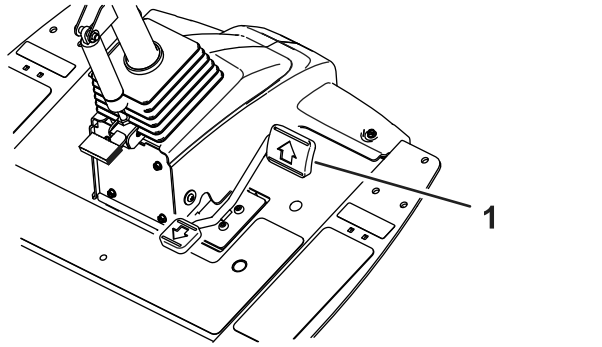

Figure 46

1. Traction pedal

Using the Virtual Pedal Stop (VPS) Feature

The virtual pedal stop (VPS) feature allows you to temporarily set a maximum traction speed that is less than the password-protected supervisor maximum traction speed.

To temporarily set the maximum speed of the machine, press the traction pedal fully forward (Figure 46). You can set a separate speed for the mow range and transport range (Figure 47).

- To access this feature, select the InfoCenter middle button from the main screen (Figure 47).

  Note: This feature reverts back to the supervisor maximum speed settings when the key is switched off.

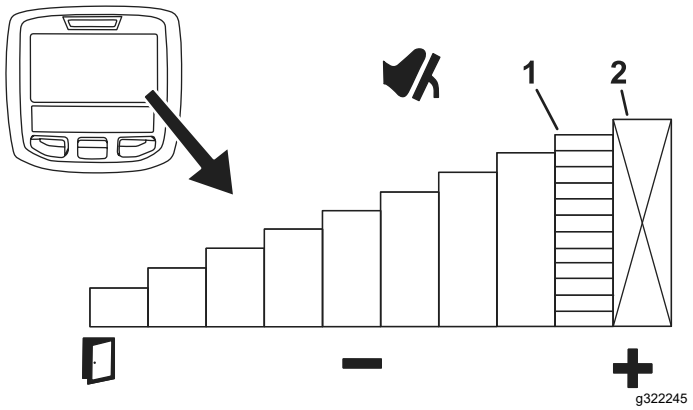

Figure 47

1. Indicates the maximum traction speed (pedal stop)
2. This speed is locked out under the protected PIN menu.

- This feature allows you to customize the speed settings for your comfort level, or to customize the speed settings to fit the application.

Whenever the max traction speed is changed via the supervisor max speed settings or Virtual Pedal Stop, the traction pedal is automatically reprogrammed to use the full pedal stroke between neutral and the new max speed. This means the operator gains more precise control of the traction speed at lower maximum speed settings.

Tips for Using Virtual Pedal Stop (VPS)

- Set the max speed temporarily lower for mowing the cleanup pass on the fairway.
- Set the max speed temporarily lower for improved control operating in or near the maintenance shop.
- Set the max speed temporarily lower for improved control loading the machine onto a trailer.

Operating the Cruise Control

Setting the Cruise Control

The cruise-control switch locks in the cruise control to maintain the desired ground speed. Pressing the rear of the switch turns the cruise control off, the middle position of the switch enables the cruise-control function, and the front of the switch sets the desired ground speed.

After the cruise control switch is enabled and the speed is set (Figure 48), use the InfoCenter to adjust the speed setting of the cruise control (Figure 43 and Figure 49).

To disengage the cruise control use the following:

- When in transport range, press the reverse traction pedal, engage the parking brake, or press the cruise control switch to the OFF positon.
- When in mow range, press the reverse traction pedal, engage the parking brake, disengage the PTO, or press the cruise control switch to the OFF positon.

  Note: Disengaging cruise control results in the machine dynamically braking to a stop. If you would like to disengage cruise control but continue driving, press the traction pedal for a smooth transition from cruise control to manual speed control.

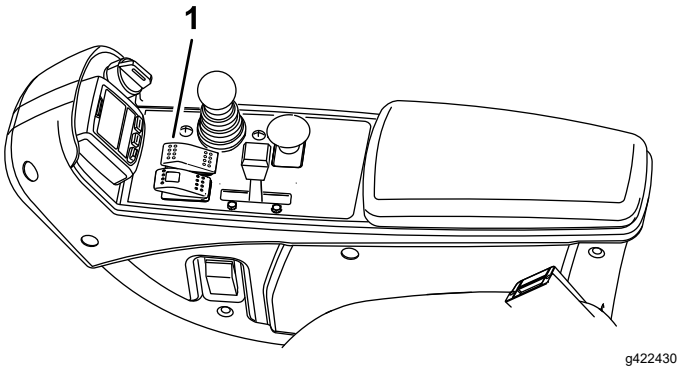

Figure 48

1. Cruise-control switch

Adjusting the Cruise Control Speed

After the cruise control switch is enabled on the console (Figure 48), use the InfoCenter to adjust the speed setting of the cruise control (Figure 49).

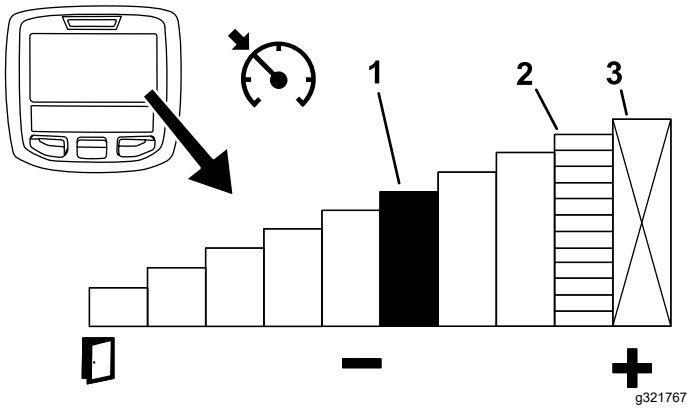

Figure 49

1. Indicates the cruise control speed
2. Indicates the maximum traction speed (pedal stop)
3. This speed is locked out under the protected PIN menu.

Tips for Using the Cruise Control

- Set a cruising speed for long distances without many obstacles.
- On rough terrain, use the InfoCenter to control the speed.
- Use the cruise control for turnarounds as follows:
  1. While mowing, set a safe, comfortable speed for turning around at the end of mowing passes.
  2. Press the traction pedal to increase the speed for mowing during the mowing pass.
  3. Take your foot off the pedal when turning around for the next mowing pass.
  4. The machine will slow down to the low cruise control setting, allowing you to make an efficient turnaround at a constant speed.
  5. After turning around, use the traction pedal to increase the machine speed back up for the next mowing pass.

Understanding the Acceleration Mode

This feature determines how quickly the machine changes traction speed when the traction pedal is not in the NEUTRAL position.

Note: If you take your foot off the traction pedal, allowing it to return to the NEUTRAL position while the machine is moving, the braking profile is engaged. The braking profile is always the same and cannot be customized by the acceleration mode feature.

Enter the protected menus in the InfoCenter to change the acceleration mode. The acceleration mode has the following 3 positions:

- Low—least aggressive acceleration and deceleration
- Medium (default)—medium acceleration and deceleration
- High—most aggressive acceleration and deceleration

Understanding the Warm-Up Mode

When starting the machine in cold weather, a message and a A snowflake icon appear on the

InfoCenter screen. Do not operate the machine above low idle until after the warm-up period.

Understanding Toro Smart Power™

With Smart Power, the operator does not have to listen to the engine speed in heavy load conditions. Smart Power prevents the engine from bogging down in heavy cutting conditions by automatically controlling the machine speed and optimizing cutting performance.

Note: By default, the Smart Power feature is ON.

Starting the Engine

Important: **You must bleed the fuel system before starting the engine if you are starting the engine for the first time, the engine has stopped due to lack of fuel, or you have performed maintenance on the fuel system; refer to Bleeding the Fuel System (page 52).**

1. Sit on the seat, keep your foot off the traction pedal so that it is in NEUTRAL, engage the parking brake, set the throttle to the FAST position, and ensure that the PTO is not engaged.
2. Turn the key to the ON/PREHEAT position.

   An automatic timer controls the glow plug preheat for 6 seconds.
3. After preheating the glow plugs, turn the key to the START position.

   Crank the engine for no longer than 15 seconds. Release the key when the engine starts. If additional preheating is required, turn the key to the OFF position and then to the ON/PREHEAT position. Repeat this process as required.
4. Run the engine at low idle speed until it warms up.

Shutting Off the Engine

1. Move all controls to NEUTRAL, engage the parking brake, move the throttle to the low idle position and allow the engine to reach low idle speed.

   Important: **Allow the engine to idle for 5 minutes before shutting it off after a full load operation. Failure to do so may damage engine components.**
2. Turn the key to the OFF position and remove it from the switch.

Cutting Grass with the Machine

1. Disengage the parking brake, disengage the PTO, and raise the cutting units.
2. Move the throttle to the FAST position.
3. Drive the machine to the mowing area.
4. Park the machine approximately 6 m (20 feet) off the fairway, facing the intended mowing direction.
5. Lower the cutting units completely with the lift/lower control lever.
6. Engage the PTO.

   Note: The cutting units will not start.
7. Tap the lift/lower control lever rearward to lift the cutting units to the turnaround position.

   Note: Tapping the lift/lower control lever without holding it raises the cutting units to the turnaround position and stops the rotation of the reels until the cutting units are lowered.
8. Using the traction pedal, approach the mowing area slowly.
9. Once you reach the edge of the mowing area to start mowing, lower the cutting units with the lift/lower control lever.

   Note: Practice to ensure the cutting units do not lower early or mow an unintended area.
10. Complete the mowing pass.
11. When nearing the opposite edge of the fairway (prior to reaching the edge of the mowing area), tap the lift/lower control lever rearward to lift the cutting units to the turnaround position.
12. Perform a tear-shaped turn to quickly line up for your next pass.
13. Press the lift/lower control lever to automatically lower the cutting units from the turnaround position and continue mowing.
14. After mowing the desired area, follow the perimeter of the area to complete the cleanup mow pass. This will ensure that all of the turf along the edge of the fairway where the cutting units were being lifted and lowered is uniformly cut.

    Note: It is recommended to use the Virtual Pedal Stop (VPS) to temporarily set a lower max speed to improve operating control while completing the cleanup pass; refer to Using the Virtual Pedal Stop (VPS) Feature (page 32).

Setting the Reel Speed

Important: **It is important that proper reel speeds are used for your mowing application.**

Reel speeds that are too slow may result in a wave pattern in the turf, also known as clip marks, marcelling, or bobbing. If this is observed, try increasing the reel speeds or reducing the mowing speed.

Reel speeds that are too fast may result in turf damage and/or premature wear of the reels, bedknives, and other mechanical components.

Refer to Setting the Front and Rear Reel Speeds (page 29).

To adjust the reel speed manually, refer to the following:

1. In the InfoCenter, under the settings menu, enter the blade count, mow speed, and HOC to calculate the proper reel speed.
2. If further adjustments are required, in the settings menu, scroll down to the F Reel RPM, R Reel RPM, or both.
3. Press the right button to change the reel-speed value. As the speed setting is changed, the display continues to show the calculated reel speed based on blade count, mow speed, and HOC, but the new value is also displayed.

   Note: You may need to increase or decrease the reel speed to compensate for varying turf conditions.

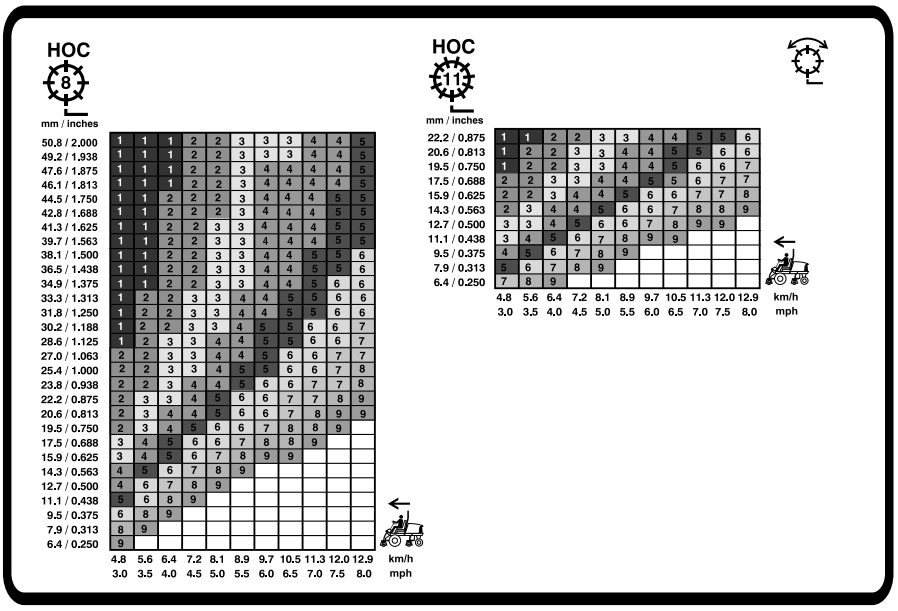

g420088

Figure 50

7 inch (178 mm) Reel Speed Chart

Adjusting the Lift-Arm Counterbalance

Rear Cutting Units

⚠ CAUTION

The springs are under tension and could cause personal injury.

Use caution when adjusting the springs.

You can adjust the amount of counterbalance force applied to the rear cutting-units to help compensate for different turf conditions, and to maintain a uniform height of cut in rough conditions or in areas of thatch buildup.

You adjust counterbalance force of each torsion spring to 1 of 4 settings. Each increment increases or decreases the counterbalance force on the cutting unit by 2.3 kg (5 lb). You can position the springs at the back side of the first spring actuator to remove all counterbalance (fourth position).

Note: To remove all counterbalance force, position the long leg of the torsion spring above the shouldered stud.

1. Park the machine on a level surface, lower the cutting units, shut off the engine, engage the parking brake, and remove the key.
2. Insert the long end of the counterbalance spring into a tube or similar object, and pivot the spring around the shouldered stud to the desired position (Figure 51).

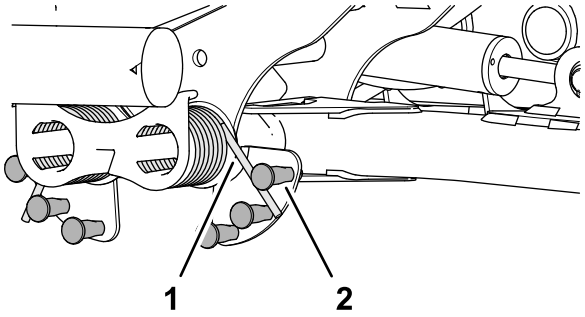

g375585

Figure 51

1. Spring
2. Shouldered stud

3. Repeat steps 1 and 2 at the other counterbalance spring.

Adjusting the Lift-Arm Turnaround Position

1. Park the machine on a level surface, lower the cutting units, shut off the engine, engage the parking brake, and remove the key.
2. The lift-arm switch is located underneath the hydraulic tank and inboard of the cutting unit #5 lift arm (Figure 29).

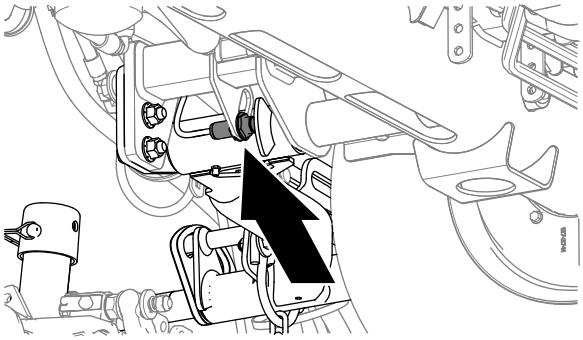

g375697

Figure 52

3. Loosen the jam nut that secures lift-arm switch to the switch plate (Figure 53).

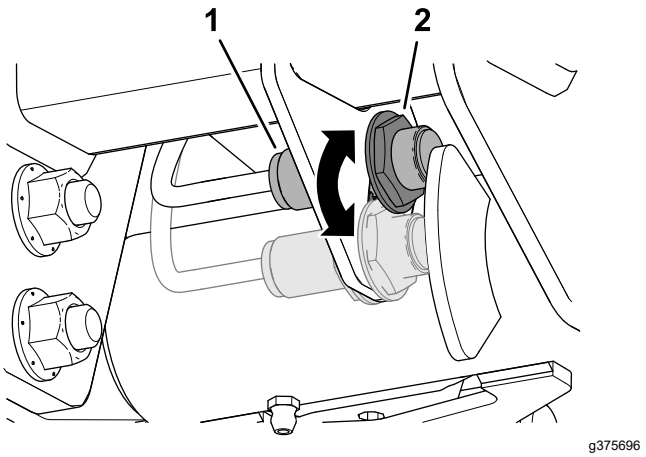

g375696

Figure 53

1. Switch
2. Lift-arm sensing device

4. Adjust the lift-arm switch as follows:
   - To increase the lift-arm turnaround height, move the switch down.
   - To decrease the lift-arm turnaround height, move the switch up.

   Important: **Maintain an air gap of 1.0 to 2.5 mm (0.040 to 0.100 inches) between the switch and the lift-arm trigger. The LED light on the switch verifies proper function of the switch.**
5. Tighten the jam nuts to 20 N·m +/- 2 N·m (15 +/- 1.5 ft-lb).

   Important: **Do not overtighten the jam nuts; otherwise, you may damage the sensor.**

Adjusting the Turf-Compensation Spring

The turf-compensation spring (Figure 54) transfers the weight from the front roller to the rear roller. This helps to reduce a wave pattern in the turf, also known as marcelling or bobbing.

Important: **Make spring adjustments with the cutting unit mounted to the traction unit, pointing straight ahead, and lowered to the shop floor.**

1. Make sure that the hairpin is installed in the rear hole in the spring rod (Figure 54).

   Note: When servicing the cutting unit, move the hairpin to the spring-rod hole next to the turf-compensation spring.

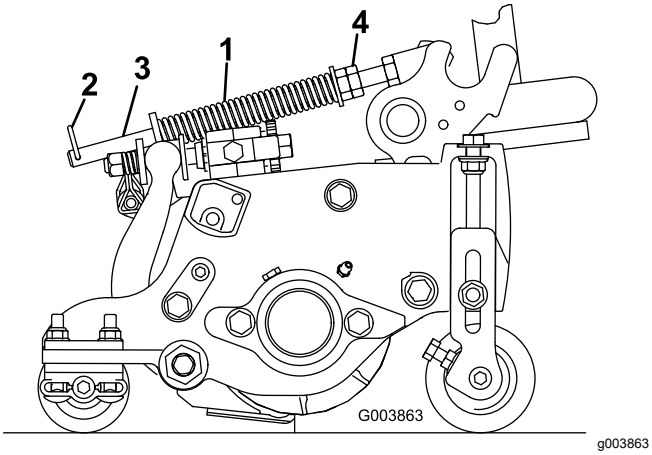

Figure 54

1. Turf-compensation spring
2. Hairpin
3. Spring rod
4. Hex nuts

2. Tighten the hex nuts on the front end of the spring rod until the compressed length of the spring is 15.9 cm (6.25 inches); refer to Figure 54.

   Note: When operating on rough terrain decrease the spring length by 13 mm (1/2 inch). Ground following will be slightly decreased.

   Note: The turf compensation setting will need to be reset if the HOC setting or the Aggressiveness of Cut setting is changed.

Understanding the Diagnostic Light

The machine is equipped with a diagnostic light which indicates if the electronic controller senses an electronic malfunction. The diagnostic light is located on the control arm (Figure 55). When the machine is functioning properly and the key switch is moved to the ON/RUN position, the diagnostic light turns on briefly to indicate the light is working properly. When a machine advisory message is displayed, the light illuminates when the message is present. When a fault message is displayed, the light blinks until the fault is resolved.

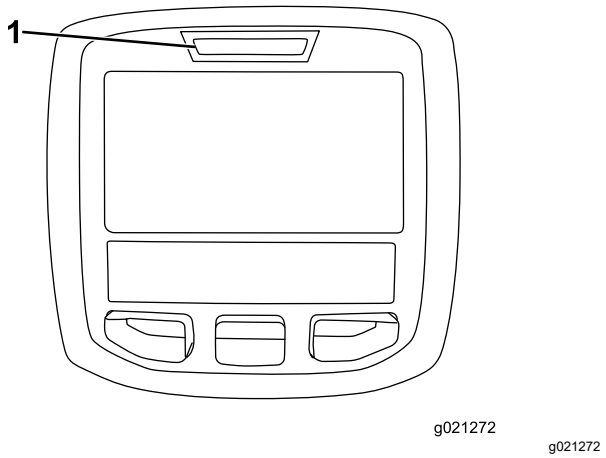

Figure 55

1. Diagnostic light

Operating Tips

Becoming Familiarized with the Machine

Before mowing grass, practice operating the machine in an open area. Start and shut off the engine. Operate in forward and reverse. Lower and raise the cutting units and engage and disengage the reels. When you feel familiar with the machine, practice operating up and down slopes at different speeds.

Understanding the Warning System

If a warning light comes on during operation, stop the machine immediately and correct the problem before continuing operation. Serious damage could occur if you operate the machine with a malfunction.

Changing Mowing Patterns

This is the most effective method to prevent washboarding.

Change mowing patterns often to minimize a poor after-cut appearance from repeatedly mowing in the same direction.

Using Proper Mowing Techniques

- To achieve the professional straight-line cut and striping that is desirable for some applications, find a tree or other object in the distance and drive straight toward it.
- Maintain reel and bedknife sharpness.
- Maintain proper reel to bedknife clearance. Use light contact.

- Follow and maintain the 1/3rd rule (cut only 1/3 of the grass blade at a time).
- Set reel speed and traction speed to obtain the desired clip length.
- When mowing in wet conditions, open the rear shield of the cutting unit.

Scalping, Circle Cutting, and Verticutting

- **Scalping/Circle Cutting**
  - Scalping and circle cutting are considered severe applications. Dedicate reels specifically to these applications.
  - Follow and maintain the 1/3rd rule (cut only 1/3 of the grass blade at a time).
- **Verticutting**
  - For 5-inch verticutters, set the verticutter blade depth to 1/8 inch or less. For 7-inch verticutters, set the blade depth to 1/4 inch or less.
  - Ensure that the cutting-unit blades are sharp, adjusted correctly, and that none of the blades are bent. Dull and bent blades require more power.
  - Adding more blades to reduce the blade spacing increases power consumption.
- **Best Practices for Scalping, Circle Cutting, and Verticutting**
  - Open the rear cutting-unit shields.
  - Recommended maximum mowing speed is 6 km/h (4 mph).
  - Set the reel speeds to setting 6.

    Note: Higher reel speed settings result in less torque. When scalping, better performance and efficiency is achieved at lower reel speed settings.
  - Do not use Economy Mode.
  - Use the InfoCenter to monitor the engine coolant temperature.
  - Frequently check the rear radiator screen and the air cleaner air inlet screen above the radiator for chaff build up.
  - If the engine overheats, park the machine in a shaded area with good air flow to let the components cool.

Transporting the Machine

Disengage the PTO and raise the cutting units to the TRANSPORT position. Be careful when driving between objects so you do not accidentally damage the machine or cutting units. Use extra care when operating the machine on slopes. Drive slowly and avoid sharp turns on slopes to prevent rollovers. Lower the cutting units when going downhill for steering control.

Maintaining the Machine after Mowing

After mowing, thoroughly wash the machine with a garden hose with no nozzle to avoid contamination and damage to the seals and bearings caused by excessive water pressure. Ensure that the radiator and oil cooler are kept free of dirt or grass clippings. After cleaning, inspect the machine for possible hydraulic-fluid leaks, damage, or wear to the hydraulic and mechanical components, and check the cutting-unit blades for sharpness.

After Operation

After Operation Safety

General Safety

- Park the machine on a level surface.
- Disengage and lower the cutting units.
- Engage the parking brake.
- Shut off the engine and remove the key.
- Wait for all movement to stop.
- Allow the machine to cool before adjusting, servicing, cleaning, or storing it.
- To help prevent fires, ensure that the cutting units, drives, mufflers, cooling screens, and engine compartment are free from grass and debris buildup. Clean up oil or fuel spills.
- Disengage the drive to the attachment whenever you are hauling or not using the machine.
- Maintain and clean the seat belt(s) as necessary.
- Do not store the machine or fuel container where there is an open flame, spark, or pilot light, such as on a water heater or on other appliances.

Hauling the Machine

- Use full-width ramps for loading the machine onto a trailer or truck.
- Tie the machine down securely.

Identifying the Tie-Down Points

- **Front of the machine**—the hole in the rectangular pad, under the axle tube, inside each front tire (Figure 56).

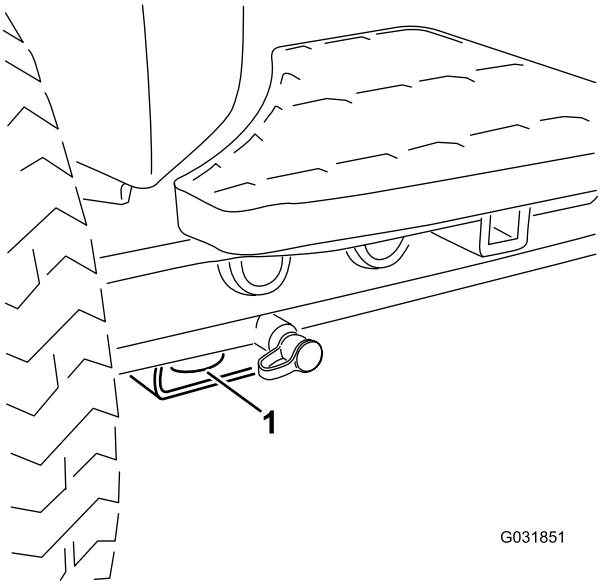

Figure 56

1. Front tie-down

- **Rear of the machine**—each side of the machine on the rear frame (Figure 57).

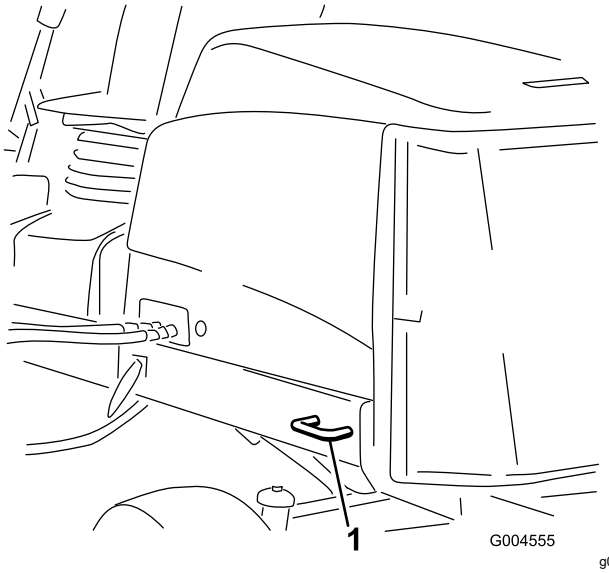

Figure 57

1. Rear tie-down

Pushing or Towing the Machine

In an emergency, you can move the machine forward by actuating the bypass valve in the variable-displacement hydraulic pump and pushing or towing the machine.

Important: **Do not push or tow the machine faster than 3 to 4.8 km/h (2 to 3 mph). If you push or tow at a faster speed, internal transmission damage may occur.**

The bypass valves must be open and the brake released whenever you push or tow the machine.

1. Unlatch the seat base and tilt the seat open.
2. Locate the bypass valve under the seat and on the top of the hydrostat (Figure 58).

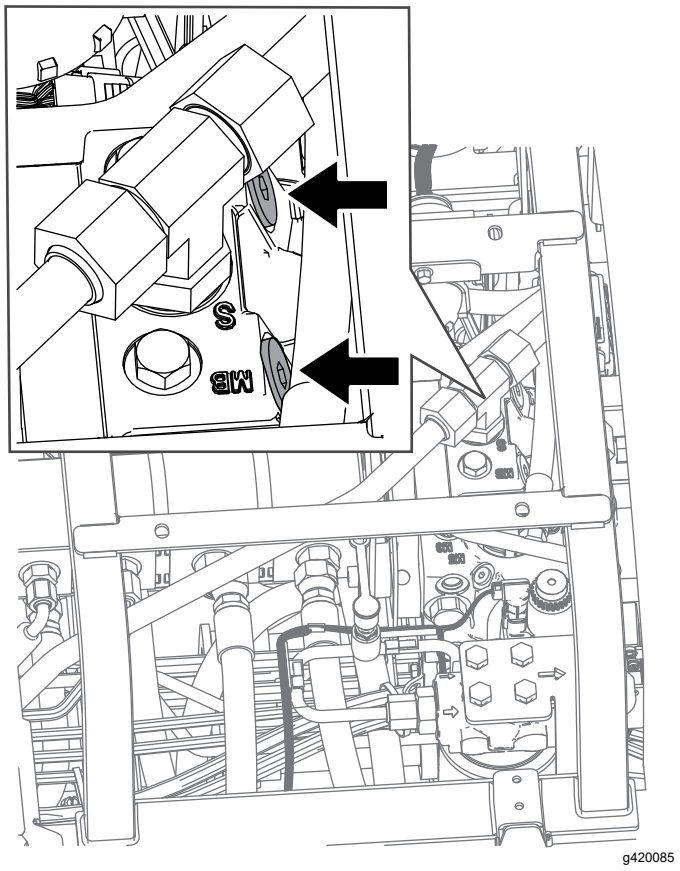

Figure 58

3. Loosen the valves with 3 turns to allow the oil to bypass internally.

   Note: Because the fluid is bypassed, the machine can be moved slowly without damaging the transmission.
4. Locate the brake release manifold near the front right tire and behind the hydraulic tank (Figure 59).

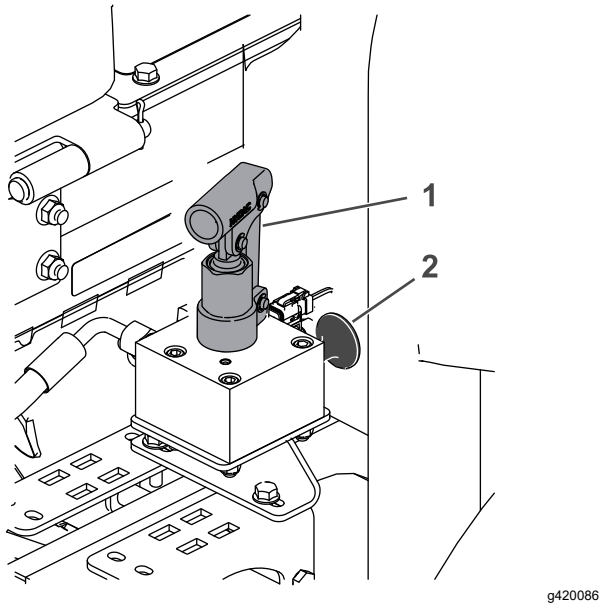

Figure 59

1. Pump mechanism on the brake manifold
2. Black knob

5. Insert the long end of a ratchet or similar object, hold the black knob in on the manifold, and pump the manifold 3 times. As soon as there is substantial resistance when pumping the brake is released.

   Important: **Do not pump the manifold after it does not pump easily. Damage could occur if the manifold is pumped too much.**

   Note: Once the pressure is built up in the manifold, the brake will be released for approximately 60 minutes. If needed after 60 minutes, release the brake again by pumping the manifold.

6. Push or tow the machine.
7. Set the brake by pulling the black knob out or starting the engine.

   Note: The brake automatically resets when you start the engine and you do not need to pull the black knob out.

8. Close the bypass valves. Torque the valves to 11 N·m (5 to 8 ft-lb).

   Important: **Ensure that the bypass valves are closed before you start operating the machine. Running the engine with an open bypass valve causes the transmission to overheat.**

Maintenance

Note: Determine the left and right sides of the machine from the normal operating position.

Note: Download a free copy of the electrical or hydraulic schematic by visiting www.Toro.com and searching for your machine from the Manuals link on the home page.

Maintenance Safety

- Before you leave the operator's position, do the following:
  - Park the machine on a level surface.
  - Disengage and lower the cutting units.
  - Engage the parking brake.
  - Shut off the engine and remove the key.
  - Wait for all movement to stop.
  - Allow the machine to cool before adjusting, servicing, cleaning, or storing it.
- Wear appropriate clothing, including eye-protection; long pants and substantial, slip-resistant footwear. Keep hands, feet, clothing, jewelry, and long hair away from moving parts.
- Allow machine components to cool before performing maintenance.
- If possible, do not perform maintenance while the engine is running. Keep away from moving parts.
- Operate the engine only in well-ventilated areas. Exhaust gases contain carbon monoxide, which is lethal if inhaled.
- Support the machine with jack stands whenever you work under the machine.
- Carefully release pressure from components with stored energy.
- Keep all parts of the machine in good working condition and all hardware tightened.
- Replace all worn or damaged decals.
- To ensure safe, optimal performance of the machine, use only genuine Toro replacement parts. Replacement parts made by other manufacturers could be dangerous, and such use could void the product warranty.

Recommended Maintenance Schedule(s)

Maintenance Service Interval	Maintenance Procedure
After the first hour	• Torque the wheel lug nuts to 94 to 122 N·m (70 to 90 ft-lb).
After the first 10 hours	• Torque the wheel lug nuts to 94 to 122 N·m (70 to 90 ft-lb).
After the first 50 hours	• Change the engine oil and filter. • Check the engine speed (idle and full throttle).
Before each use or daily	• Inspect the seat belt(s) for wear, cuts, and other damage. Replace the seat belt(s) if any component does not operate properly. • Check the interlock switches. • Inspect the ROPS components for wear or damage. • Check the air filter. • Check the level of the engine oil. • Drain water or other contaminants from the fuel/water separator. • Check the electrical cables for damage, wear, loose fittings, weather deterioration, and chemical deterioration. • Check the tire air pressure. • Check the coolant level. • Remove debris from the screen, oil coolers, and radiator. (More frequently in dirty operating conditions). • Check the hydraulic-fluid level. • Check the hydraulic lines and hoses for leaks, kinked lines, loose mounting supports, wear, loose fittings, weather deterioration, and chemical deterioration. • Check the reel-to-bedknife contact. • Inspect the seat belt.
Every 50 hours	• Grease the bearings and bushings (and immediately after every washing). • Clean the battery and check the condition of it (or weekly, whichever comes first). • Check the battery-cable connections.

Maintenance Service Interval	Maintenance Procedure
Every 100 hours	• Inspect the cooling system hoses. • Check the condition and tension of the alternator belt.
Every 150 hours	• Change the engine oil and filter.
Every 200 hours	• Drain moisture from the fuel and hydraulic fluid tanks.
Every 250 hours	• Torque the wheel lug nuts to 94 to 122 N·m (70 to 90 ft-lb).
Every 400 hours	• Service the air cleaner. (more frequently in extremely dirty or dusty conditions). Service the air cleaner earlier if the air-cleaner indicator shows red. • Replace the fuel/water separator filter. • Inspect the fuel lines and connections. • Check the engine speed (idle and full throttle).
Every 800 hours	• Drain and clean the fuel tank. Drain and clean the fuel tank if the fuel system becomes contaminated. • Check the rear wheel toe-in. • If you are not using the recommended hydraulic fluid or have ever filled the reservoir with an alternative fluid, replace the return-hydraulic filter and charge-hydraulic filter. • If you are not using the recommended hydraulic fluid or have ever filled the reservoir with an alternative fluid, change the hydraulic fluid. • Pack the rear wheel bearings (2 wheel drive machines only). • Adjust the engine valves (refer to the engine service manual).
Every 1,000 hours	• If you are using the recommended hydraulic fluid, replace the return-hydraulic filter and charge-hydraulic filter.
Every 2,000 hours	• If you are using the recommended hydraulic fluid, change the hydraulic fluid.
Before storage	• Drain and clean the fuel tank. Drain and clean the fuel tank if you store the machine for an extended period.
Every 2 years	• Flush and replace the cooling system fluid. • Replace the hydraulic hoses. • Replace the coolant hoses. • Flush and replace the coolant. • Replace all moving hoses.

Daily Maintenance Checklist

Duplicate this page for routine use.

Maintenance Check Item	For the week of: Mon.	Tues.	Wed.	Thurs.	Fri.	Sat.	Sun.
Check the safety interlock operation.							
Check the brake operation.							
Check the engine oil and fuel level.							
Drain the water/fuel separator.							
Check the air filter restriction indicator.							
Check the radiator and screen for debris.							
Check unusual engine noises.[1]							
Check unusual operating noises.							
Check the hydraulic system oil level.							
Check the hydraulic filter indicator. [2]							
Check hydraulic hoses for damage.							
Check for fluid leaks.							
Check the tire pressure.							
Check the instrument operation.							
Check the reel-to-bedknife adjustment.							
Check the height-of-cut adjustment.							
Check all grease fittings for lubrication.[3]							
Touch-up damaged paint.							

1. Check the glow plug and injector nozzles if hard starting, excess smoke, or rough running is noted.
2. Check with the engine running and the oil at operating temperature.
3. Immediately after every washing, regardless of the interval listed.

Important: **Refer to your engine operator's manual for additional maintenance procedures.**

Notation for Areas of Concern

Inspection performed by:		
Item	**Date**	**Information**
1		
2		
3		
4		
5		
6		
7		
8		

Pre-Maintenance Procedures

Preparing for Maintenance

1. Park the machine on a level surface, disengage the PTO, lower the cutting units, and engage the parking brake.
2. Shut off the engine, remove the key, and wait for all moving parts to stop.
3. Wait for the engine to cool.

Opening the Hood

1. Release the 2 hood latches (Figure 60).

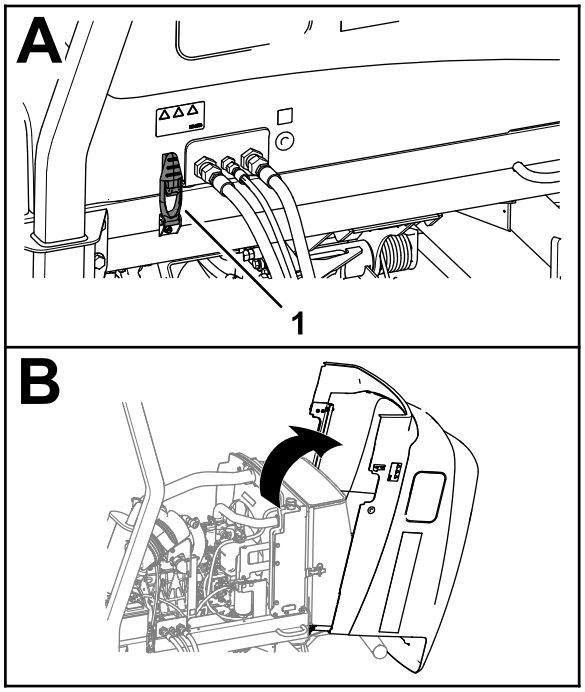

g375764

Figure 60

1. Hood latch (2)

2. Rotate open the hood.

Closing the Hood

1. Carefully rotate the hood closed (Figure 61).

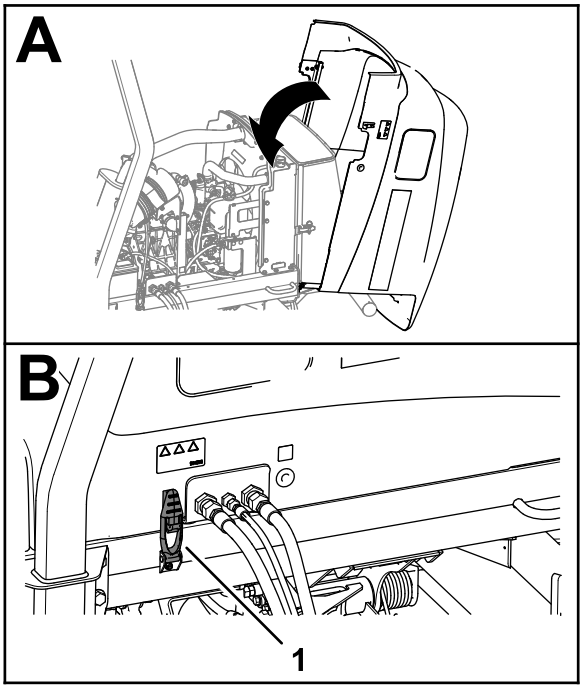

g375759

Figure 61

1. Hood latch (2)

2. Secure the hood with the 2 hood latches.

Opening the Screen

1. Remove the ball pin from the screen latch (Figure 62).

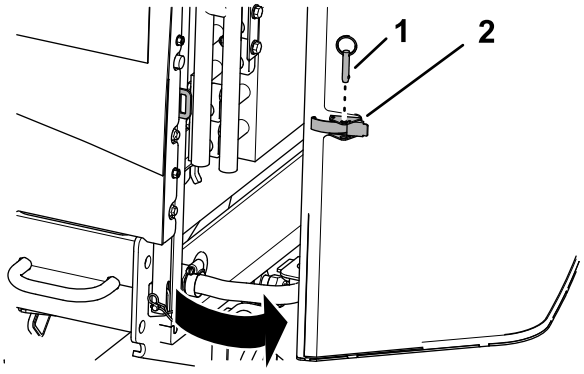

g378822

Figure 62

1. Ball pin
2. Screen latch

2. Unlatch and open the screen.

Closing the Screen

1. Close and latch the screen (Figure 63).

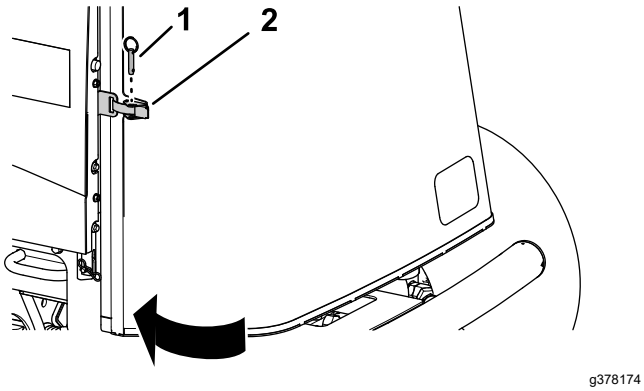

g378174

Figure 63

1. Ball pin
2. Screen latch

2. Insert the ball pin through the screen latch.

Tilting the Seat

1. Unlatch the seat base (A of Figure 64).
2. Tilt the seat and base open (B of Figure 64).
3. Support it with the prop rods (C of Figure 64).

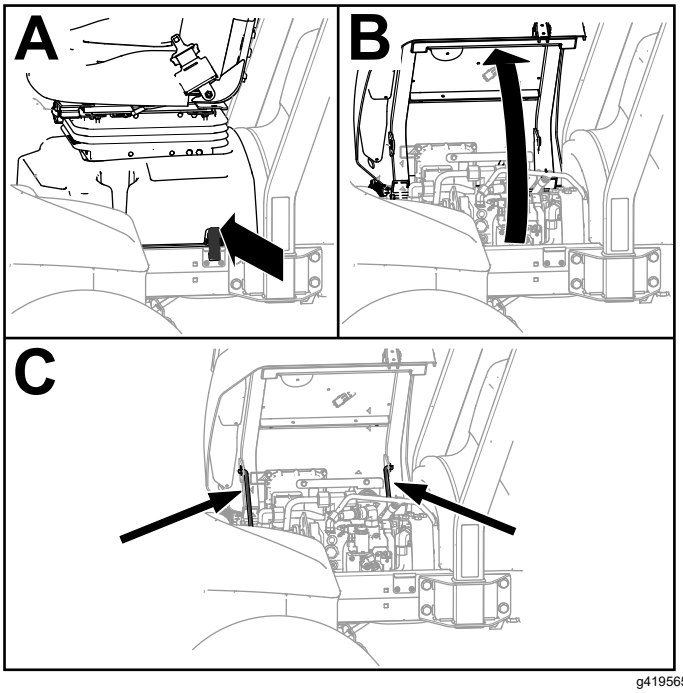

g419565

Figure 64

Lowering the Seat

1. Rotate the seat slightly, and lift the front prop rod out of the dent of the seat-support slot.
2. Carefully lower the seat until it latches securely.

Jacking Point Locations

Note: Support the machine with jack stands whenever you work under the machine.

Use the following as machine-lift points:

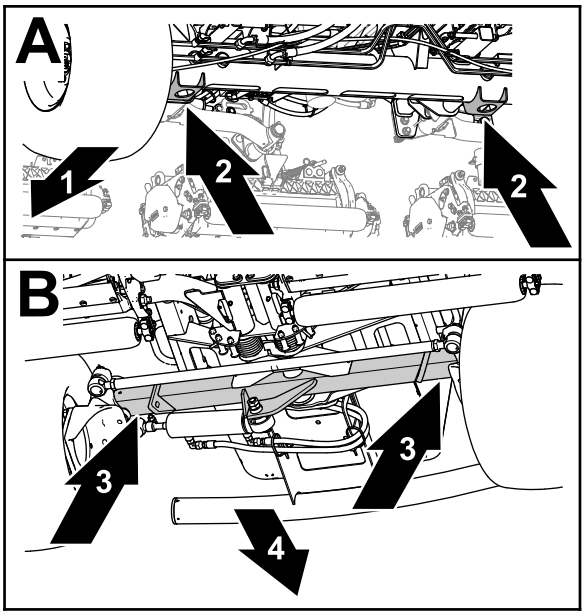

g375763

Figure 65

1. Front of the machine
2. Jack brackets (front-axle tube)
3. Rear-axle tube
4. Back of the machine

- Front—the jack brackets of the front-axle tube (Figure 65).
- Rear—the rear-axle tube.

Lubrication

Greasing the Bearings and Bushings

Service Interval: Every 50 hours (and immediately after every washing).

Grease Specification: No. 2 lithium grease

1. Prepare the machine for maintenance; refer to Preparing for Maintenance (page 44).
2. Open the hood; refer to Opening the Hood (page 44).
3. The lubricate the machine at the fittings at the locations as follows:
   - Pump-driveshaft U-joint (3) (Figure 66)

     Note: The pump-driveshaft is located under the hood.

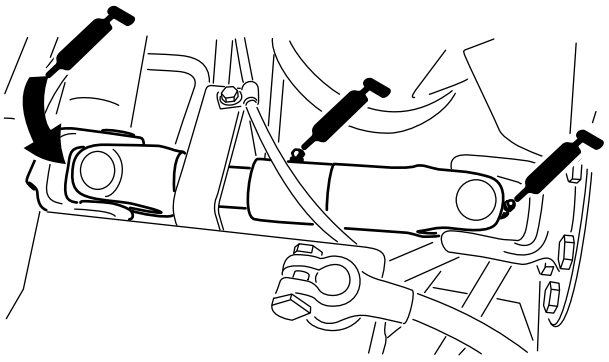

Figure 66

   - Cutting-unit lift-arm cylinders (2 each) (Figure 67)

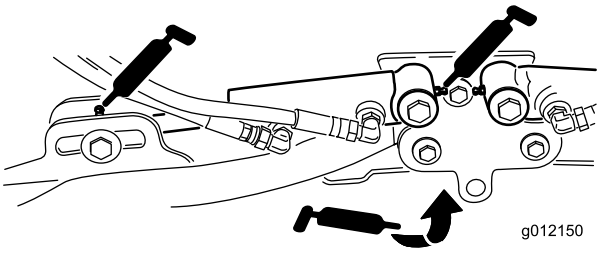

Figure 67

   - Lift-arm pivots (1 each) (Figure 67)
   - Cutting-unit carrier-frame and pivot (2 each) (Figure 68)

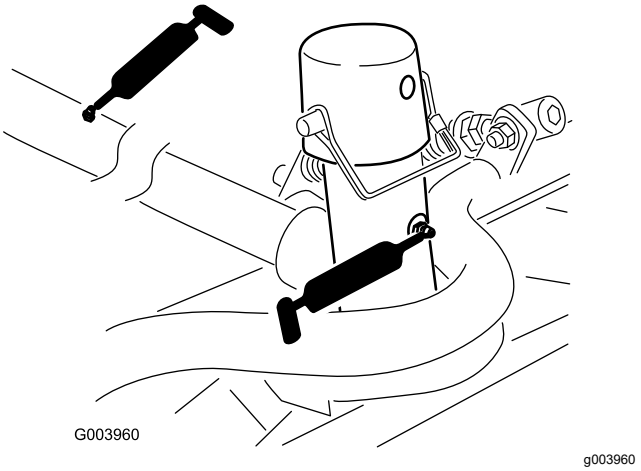

Figure 68

   - Lift-arm pivot shaft (1 each) (Figure 69)

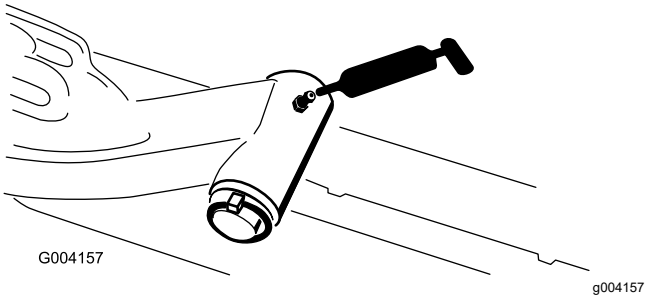

Figure 69

   - Axle-steering pivot (1) (Figure 70)

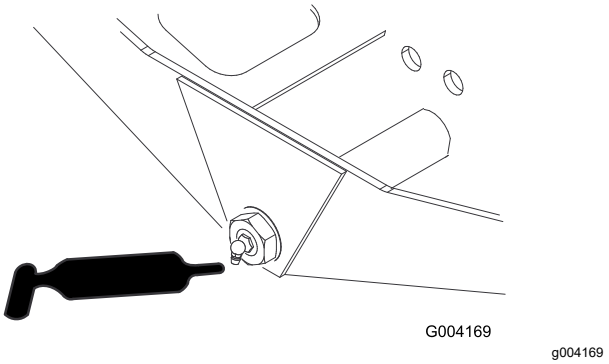

Figure 70

   - Steering-cylinder ball joints (2) (Figure 71)

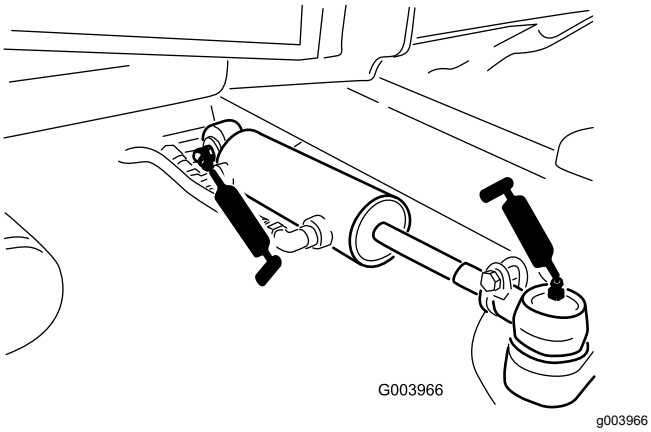

Figure 71

4. Close and latch the hood; refer to Closing the Hood (page 44).

Engine Maintenance

Engine Safety

- Shut off the engine before checking the oil or adding oil to the crankcase.
- Do not change the governor speed or overspeed the engine.

Checking the Air Filter

Service Interval: Before each use or daily

1. Prepare the machine for maintenance; refer to Preparing for Maintenance (page 44).
2. Open the hood; refer to Opening the Hood (page 44).
3. Check the service indicator at the end of the air filter housing (Figure 72).

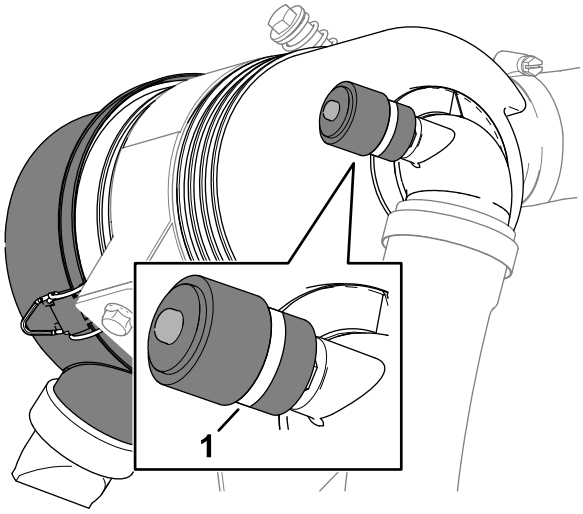

Figure 72

1. Service indicator

4. If a red band displays in the service indicator, change the air filter; refer to Servicing the Air Cleaner (page 48).
5. Squeeze the dust-ejector valve (Figure 73).

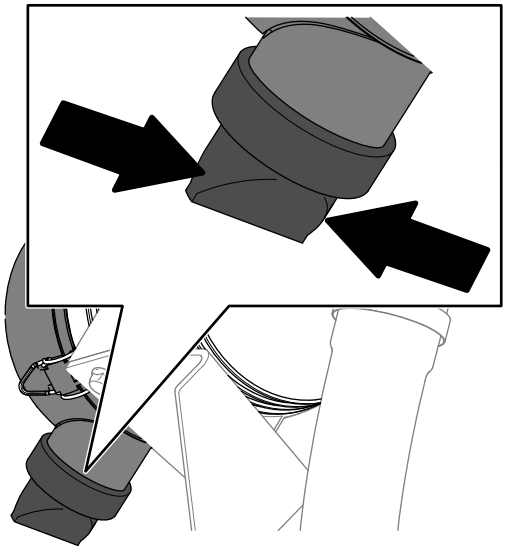

g373568

Figure 73

6. Close and latch the hood; refer to Closing the Hood (page 44).

Servicing the Air Cleaner

Service Interval: Every 400 hours (more frequently in extremely dirty or dusty conditions). Service the air cleaner earlier if the air-cleaner indicator shows red.

Check the air-cleaner body for damage which could cause an air leak. Replace it if it is damaged. Check the whole intake system for leaks, damage, or loose hose clamps.

Service the air-cleaner filter only when the service indicator requires it. Changing the air filter before it is necessary only increases the chance of dirt entering the engine when you remove the filter.

Important: **Make sure that the cover is seated correctly and seals with the air-cleaner body.**

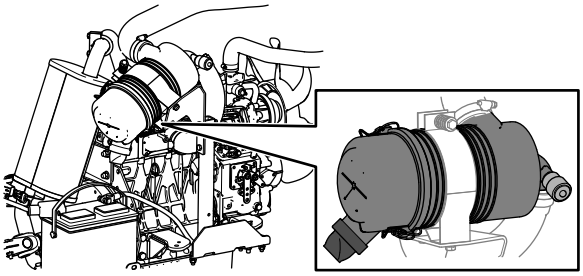

g373566

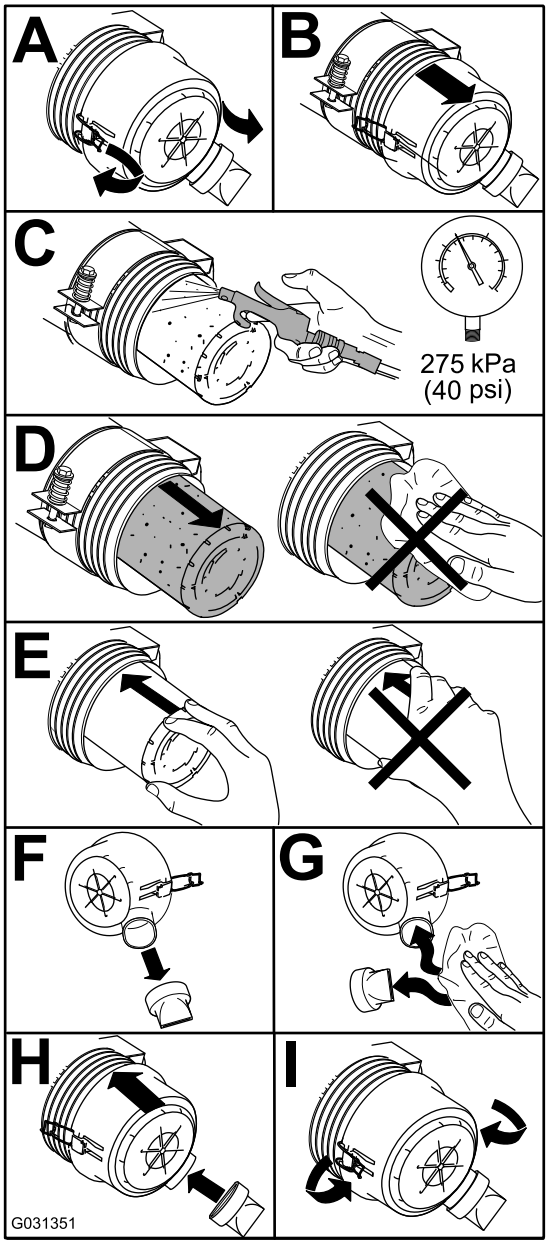

g031351

Figure 74

Resetting the Air Filter Service Indicator

1. If a red band displays in the service indicator, press the reset button at the end of the indicator (Figure 75).

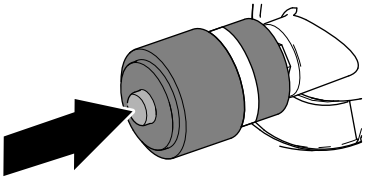

g373569

Figure 75

2. Close and latch the hood; refer to Closing the Hood (page 44).

Oil Specification

Use high-quality, low-ash engine oil that meets or exceeds API service category CH-4 or higher.

Use the following engine oil viscosity grade:

- Preferred oil: SAE 15W-40 (above 0°F)
- Alternate oil: SAE 10W-30 or 5W-30 (all temperatures)

Toro Premium Engine Oil is available from your authorized Toro distributor in either 15W-40 or 10W-30 viscosity grades.

Checking the Level of the Engine Oil

Service Interval: Before each use or daily

Important: **Check the engine oil daily. If the engine-oil level is above the Full mark on the dipstick, the engine oil may be diluted with fuel; If the engine oil level is above the Full mark, change the engine oil.**

The best time to check the engine oil is when the engine is cool before it has been started for the day. If it has already been run, allow the oil to drain back down to the sump for at least 10 minutes before checking. If the oil level is at or below the Add mark on the dipstick, add oil to bring the oil level to the Full mark. **Do not overfill the engine with oil**.

Important: **Keep the engine oil level between the upper and lower limits on the oil gauge; the engine may fail if you run it with too much or too little oil.**

1. Prepare the machine for maintenance; refer to Preparing for Maintenance (page 44).
2. Open the hood; refer to Opening the Hood (page 44).
3. Check the level of the engine oil (Figure 76).

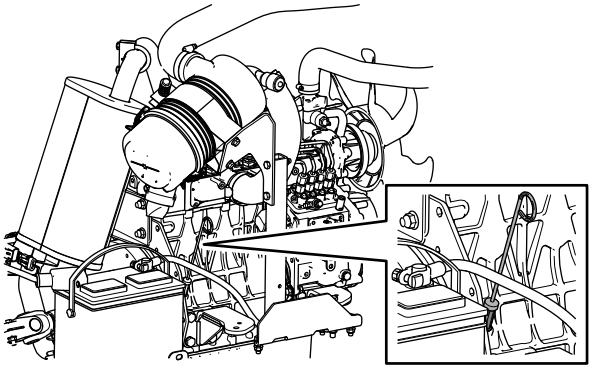

g375802

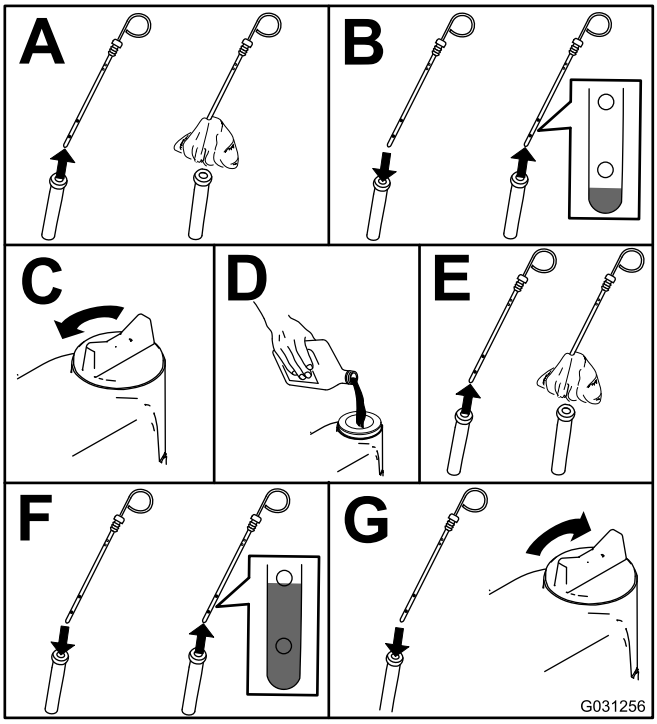

g031256

Figure 76

Important: **Be sure to keep the level of the engine oil between the upper and lower limits on the oil gauge. Engine failure may occur because of over filling or under filling the engine oil.**

4. Close and latch the hood; refer to Closing the Hood (page 44).

Crankcase Oil Capacity

Approximately 5.2 L (5.5 US qt) with the filter.

Changing the Engine Oil and Filter

Service Interval: After the first 50 hours—Change the engine oil and filter.

Every 150 hours

1. Prepare the machine; refer to Preparing for Maintenance (page 44).
2. Drain the oil and change the filter.

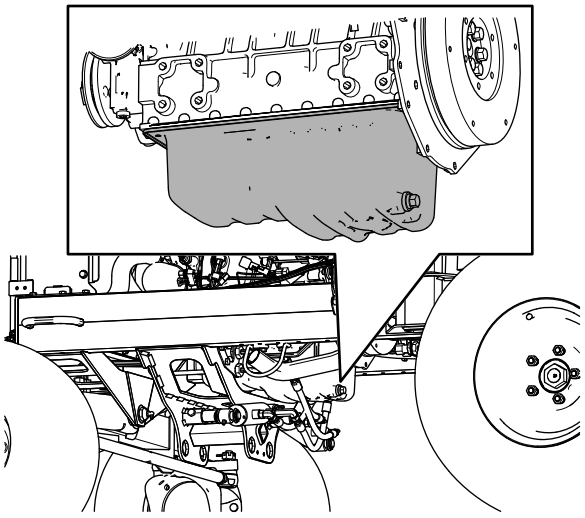

g378574

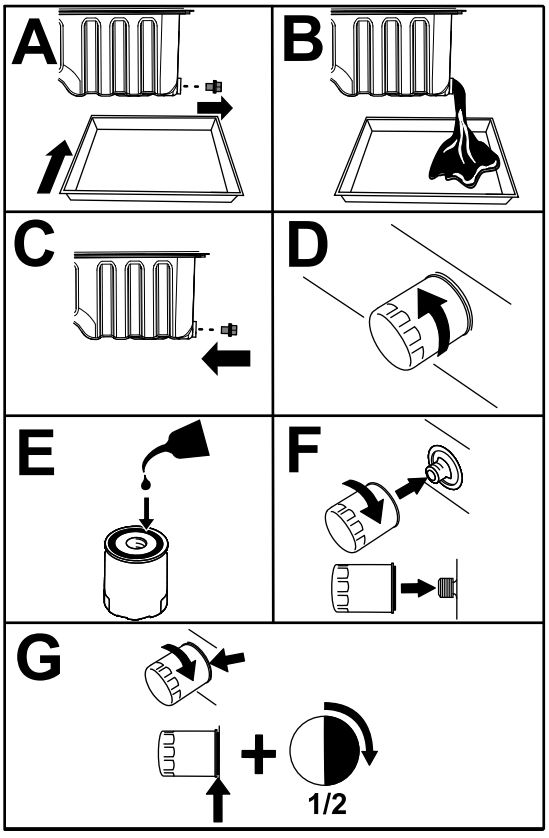

g378573

Figure 77

Important: **Do not overtighten the filter.**

3. Open the hood; refer to Opening the Hood (page 44).
4. Add oil to the crankcase; refer to Oil Specification (page 49), Crankcase Oil Capacity (page 49), and Checking the Level of the Engine Oil (page 49).
5. Close and latch the hood; refer to Closing the Hood (page 44).

Fuel System Maintenance

Fuel Maintenance

This *Operator's Manual* contains more detailed fuel and fuel system maintenance information than the engine *Owner's Manual*, which is a general-purpose reference relating to fuel and fuel maintenance.

Ensure that you understand that the fuel system maintenance, fuel storage, and fuel quality require your attention to avoid downtime and extensive engine repairs.

The fuel system has extremely tight tolerances due to the emissions and control requirements. Diesel fuel quality and cleanliness is more important for the longevity of today's high-pressure common rail (HPCR) fuel-injection system used on diesel engines.

Important: **Water or air in the fuel system will damage your engine! Do not assume that new fuel is clean. Ensure that your fuel is from a quality supplier, store your fuel correctly, and use your fuel supply within 180 days.**

Important: **If you do not follow the procedures for fuel filter replacement, fuel system maintenance, and fuel storage, the engine fuel system could fail prematurely. Perform all fuel system maintenance at the specified intervals or whenever the fuel is contaminated or its quality is poor.**

Storing Fuel

Appropriate fuel storage is critical for your engine. Proper maintenance of fuel storage tanks is often overlooked and leads to the contamination of fuel delivered to the machine.

- Acquire only enough fuel that you will consume within 180 days. Do not use fuel that has been stored for more than 180 days. This helps eliminate water and other contaminates in the fuel.
- If you do not remove the water from the storage tank or machine fuel tank, it can lead to rust or contamination in the storage tank and fuel system components. Tank sludge developed by mold, bacteria, or fungus restricts flow and clogs the filter and fuel injectors.
- Inspect your fuel storage tank and machine fuel tank regularly to monitor the fuel quality in the tank.
- Ensure that your fuel comes from a quality supplier.
- If you find water or contaminants in your storage tank or machine fuel tank, work with your fuel provider to correct the problem and perform all fuel system maintenance.
- Do not store diesel fuel in tanks or canisters made with zinc-plated components.

Servicing the Fuel-Water Separator

Draining Water from the Fuel/Water Separator

Service Interval: Before each use or daily—Drain water or other contaminants from the fuel/water separator.

1. Drain water from the fuel/water separator as shown in Figure 78.

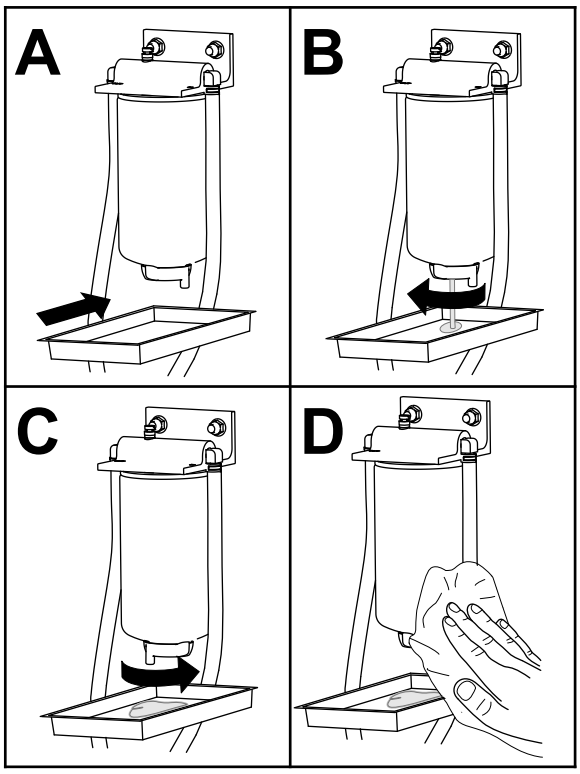

g399473

Figure 78

2. Prime the filter and the lines to the high pressure pump; refer to Priming the Fuel System (page 55).

Replacing the Fuel/Water Separator Filter

Service Interval: Every 400 hours—Replace the fuel/water separator filter.

1. Replace the filter as shown in Figure 79.

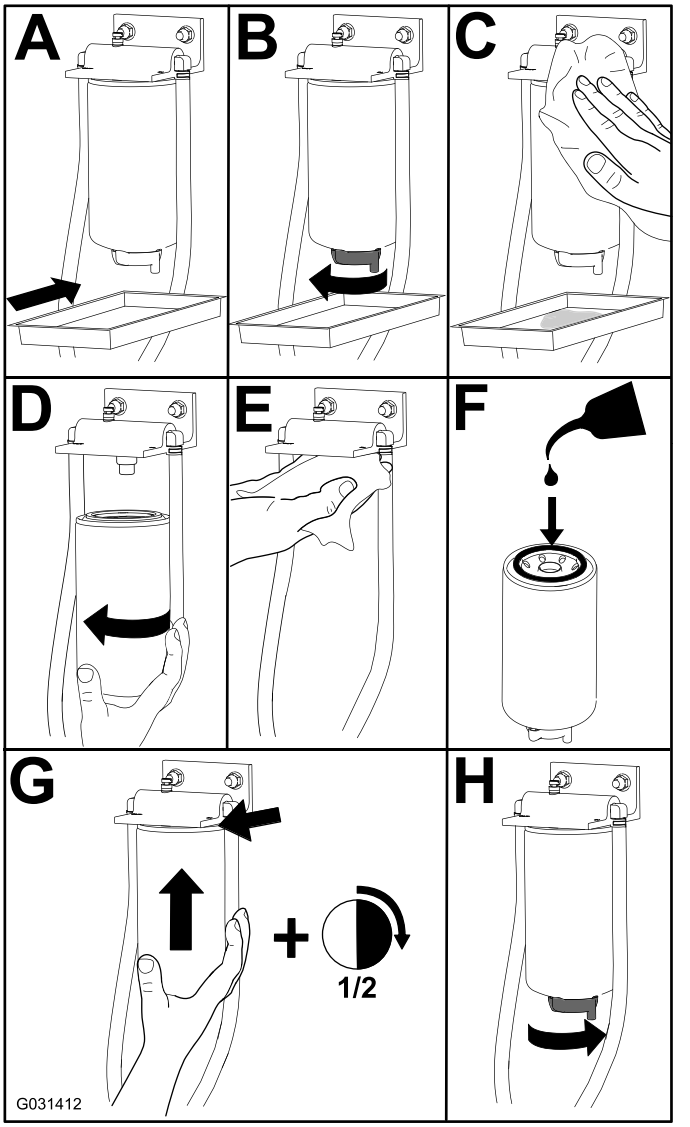

Figure 79

2. Prime the filter and the lines to the high pressure pump; refer to Priming the Fuel System (page 55).

Bleeding the Fuel System

1. Prepare the machine for maintenance; refer to Preparing for Maintenance (page 44).
2. Ensure that the fuel tank is at least half full.
3. Open the hood; refer to Opening the Hood (page 44).
4. Open the air-bleed screw on the fuel-injection pump (Figure 80).

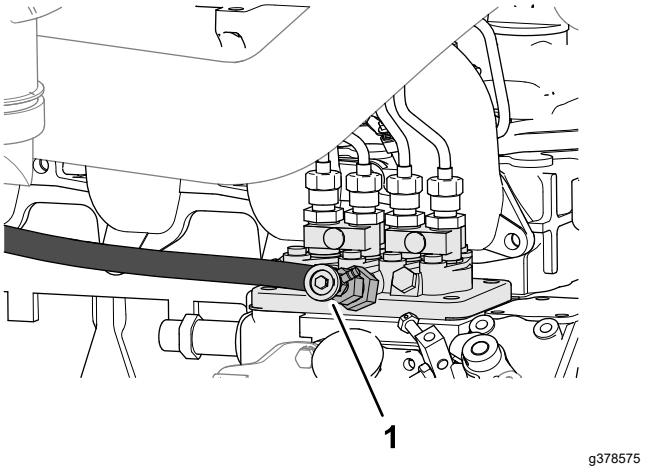

Figure 80

1. Fuel-injection pump bleed screw

5. Turn the key in the ignition switch to the ON position.

   The electric fuel pump runs, forcing air out around the air-bleed screw.

   Note: Leave the key in the ON position until a solid stream of fuel flows out around the screw.
6. Tighten the screw and turn the ignition key to OFF.
7. Close and latch the hood; refer to Closing the Hood (page 44).

Inspecting the Fuel Lines and Connections

Service Interval: Every 400 hours/Yearly (whichever comes first)

Inspect the fuel lines for deterioration, damage, or loose connections.

Replace any deteriorated clamps or hoses.

Note: Prime the fuel system if you replace any fuel lines; refer to Priming the Fuel System (page 55).

Draining the Fuel Tank

Service Interval: Every 800 hours Drain and clean the fuel tank if the fuel system becomes contaminated.

Before storage Drain and clean the fuel tank if you store the machine for an extended period.

Fuel-tank capacity: 53 L (14 US gallons)

1. Prepare the machine for maintenance; refer to Preparing for Maintenance (page 44).
2. Align a drain pan under the fuel tank-drain valve (Figure 81).

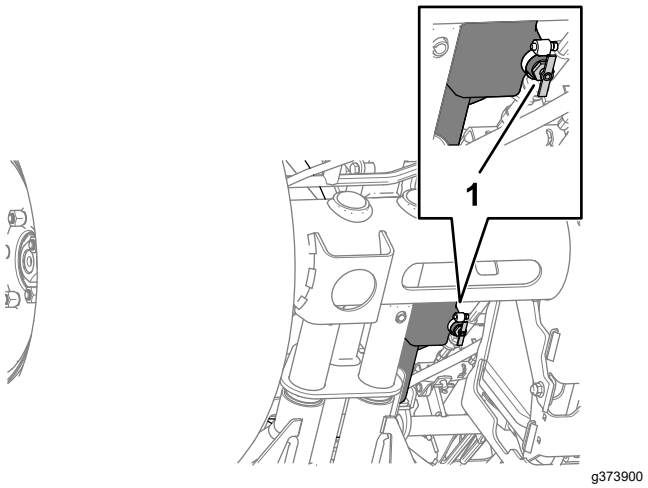

Figure 81

1. Drain valve (fuel tank)

3. Open the drain valve and allow the fuel to drain from the tank.
4. Use clean fuel to flush out the tank.
5. Close the drain valve.

Cleaning the Fuel-Pickup Tube Screen

Removing the Fuel-Pickup Tube

The fuel-pickup tube, located inside the fuel tank, comes with a screen to help prevent debris from entering the fuel system. Remove the fuel-pickup tube and clean the screen as required.

1. Prepare the machine for maintenance; refer to Preparing for Maintenance (page 44).
2. Remove the 5 Phillips-head screws that secure the fuel-sender cover to the fuel tank, and remove the cover (Figure 82).

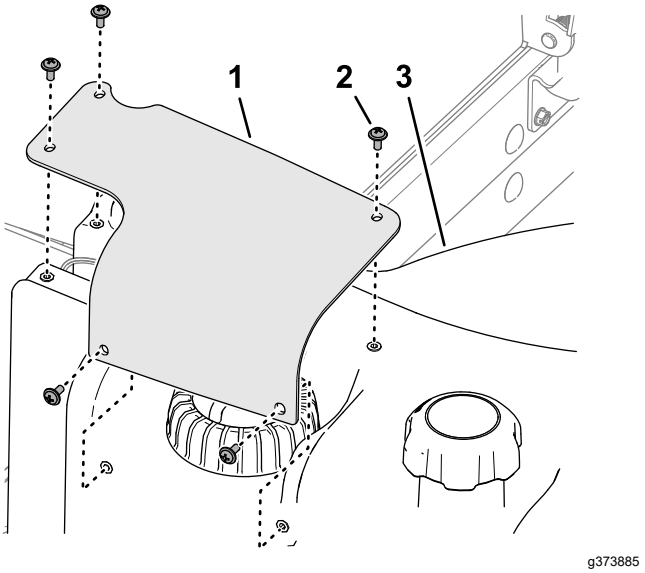

Figure 82

1. Fuel-sender cover
2. Phillips-head screw
3. Fuel tank

3. Remove the 2-socket connector of the fuel-sender harness from the 2-pin connector of the machine wire harness (Figure 83).

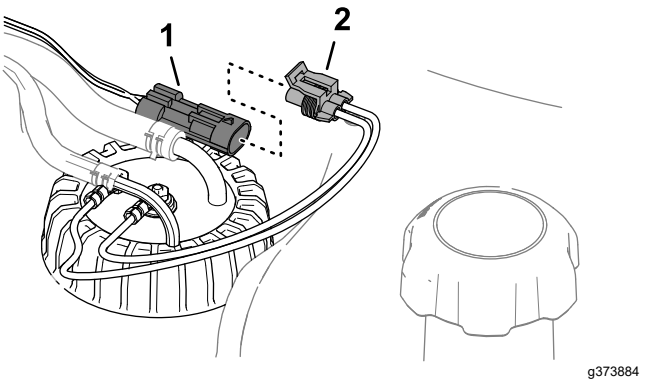

Figure 83

1. 2-pin connector (machine wire harness)
2. 2-socket connector (fuel sender)

4. Move the clamps that secure the hoses to the fittings of the fuel sender inboard, and remove the hoses from the fittings (Figure 84).

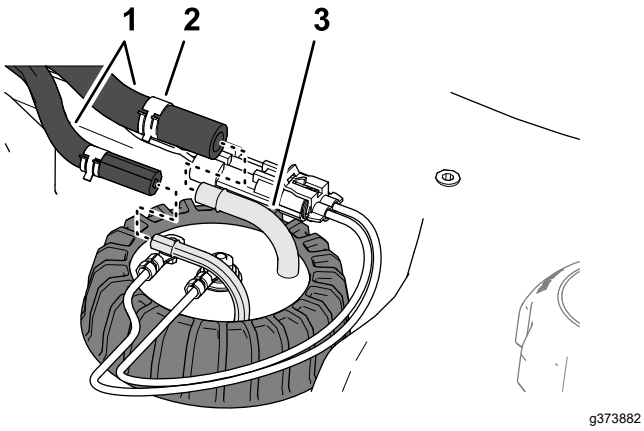

Figure 84

1. Hoses
2. Clamp
3. Fitting (fuel sender)

5. Loosen the fuel-sender cap (Figure 85).

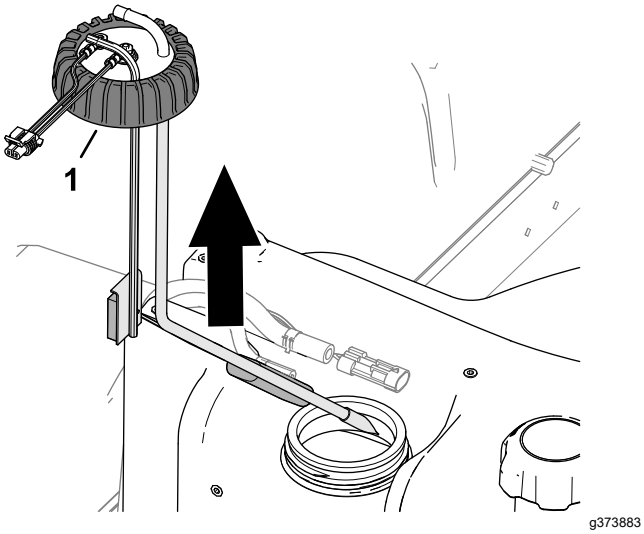

Figure 85

1. Cap (fuel sender)

6. Carefully lift the fuel sender from the tank.

   Note: Do not bend the pick-up tube, return tube, or float arm.

Cleaning the Installing the Fuel-Pickup Tube

1. Clean the screen at the end of the fuel pick-up tube (Figure 86).

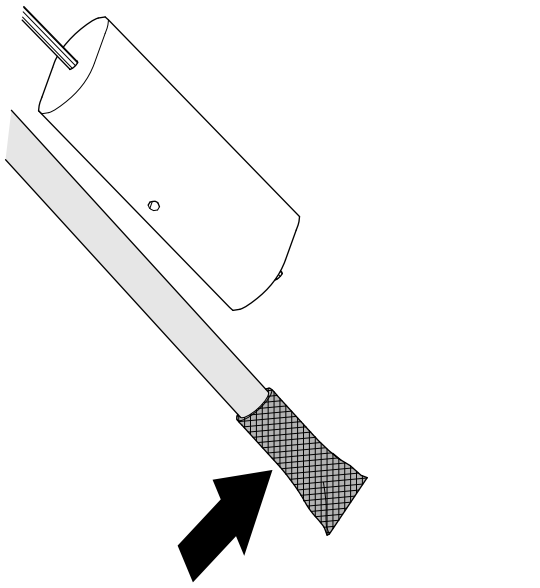

Figure 86

2. Carefully assemble the fuel pick-up tube and float into the fuel tank (Figure 87).

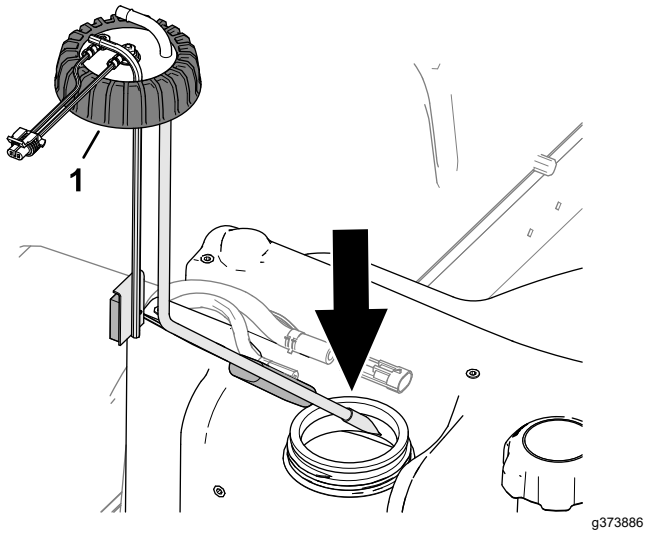

Figure 87

1. Cap (fuel sender)

3. Align the fittings for the pick-up tube and return tube inboard.
4. Tighten the fuel-sender cap to the fuel tank.
5. Assemble the hose onto the fittings of the fuel sender, and secure the hoses to the fittings with the clamps (Figure 88).

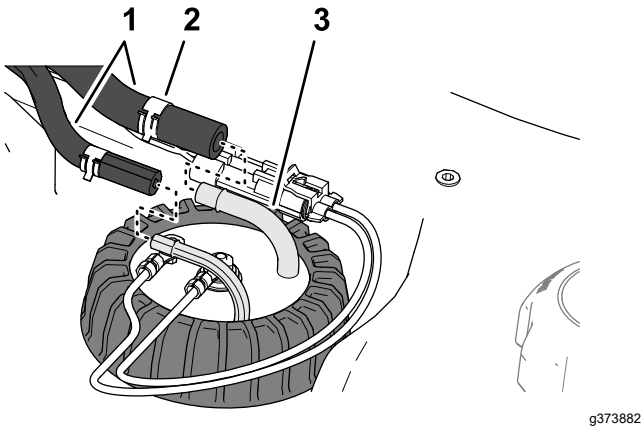

Figure 88

1. Hoses
2. Clamp
3. Fitting (fuel sender)

6. Plug the connector of the fuel-sender harness into the connector of the machine wire harness (Figure 89).

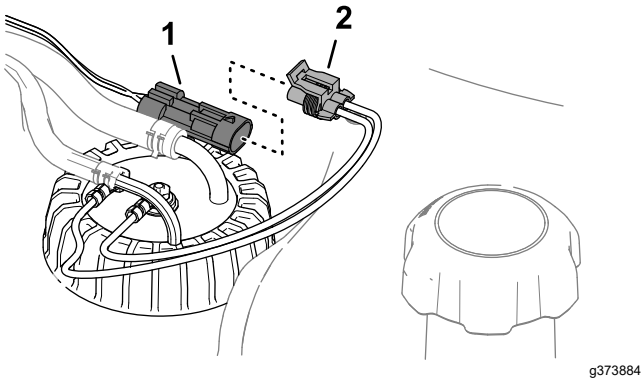

Figure 89

1. 2-pin connector (machine wire harness)
2. 2-socket connector (fuel sender)

7. Align the holes in the fuel-sender cover with the holes in the fuel tank, and secure the cover to the tank with the 5 Phillips-head screws (Figure 90).

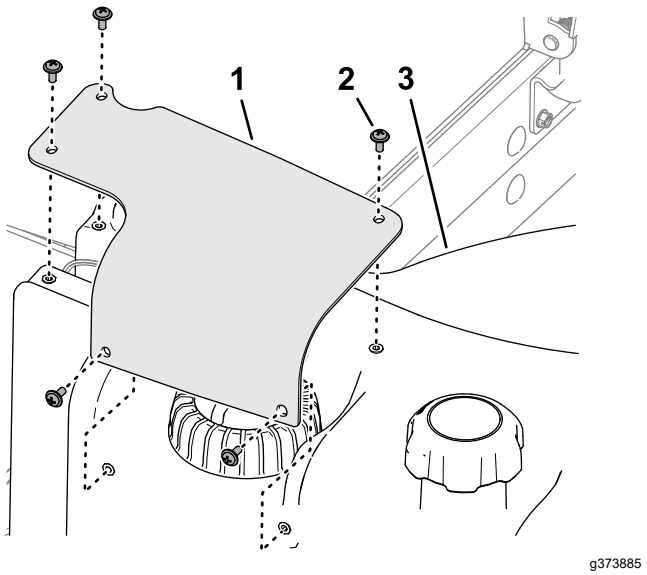

Figure 90

1. Fuel-sender cover
2. Phillips-head screw
3. Fuel tank

Priming the Fuel System

Prime the fuel system after the following scenarios:

- Replacing the fuel filter.
- Draining the water separator after each use or daily.
- Running out of fuel.
- Replacing a fuel hose or open the fuel system for any reason.

To prime the fuel system, perform the following steps:

Important: **Do not use the engine-starter motor to crank the engine for fuel-system priming.**

1. Ensure that fuel is in the fuel tank.
2. Perform the following steps to prime the filter and the lines to the high-pressure pump to prevent wear or damage to the pump:
   A. Cycle the key to the ON position for 15 to 20 seconds.
   B. Cycle the key to the OFF position for 30 to 40 seconds.

      Note: This allows the ECU to power down.
   C. Cycle the key to the ON position for 15 to 20 seconds.
   D. Inspect for leaks around the filter and hoses.
   E. Start the engine and inspect for leaks.

Electrical System Maintenance

Electrical System Safety

- Disconnect the battery before repairing the machine. Disconnect the negative terminal first and the positive last. Connect the positive terminal first and the negative last.
- Charge the battery in an open, well-ventilated area, away from sparks and flames. Unplug the charger before connecting or disconnecting the battery. Wear protective clothing and use insulated tools.

Disconnecting the 12 V Battery

⚠ DANGER

Battery electrolyte contains sulfuric acid, which is fatal if consumed and causes severe burns.

- **Do not drink electrolyte and avoid contact with skin, eyes, or clothing. Wear safety glasses to shield your eyes and rubber gloves to protect your hands.**
- **Fill the battery where clean water is always available for flushing the skin.**

1. Prepare the machine for maintenance; refer to Preparing for Maintenance (page 44).
2. Open the hood; refer to Opening the Hood (page 44).
3. Press the sides of the battery cover, and remove the cover from the battery tray (Figure 91).

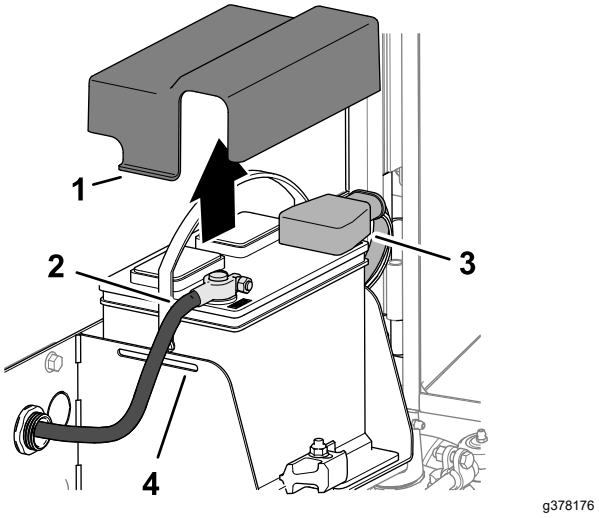

Figure 91

1. Tab (battery cover)
2. Negative battery cable
3. Insulator cover (positive battery cable)
4. Slot (battery tray)

4. Disconnect the negative battery cable.
5. Slide the insulator cover off the positive battery-cable clamp, and disconnect the positive battery cable.

Connecting the 12 V Battery

1. Install the positive battery cable (red) to the positive (+) battery post (Figure 92).

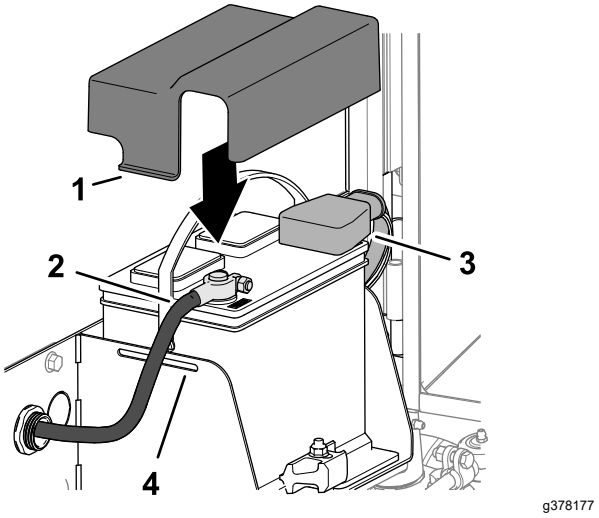

Figure 92

1. Tab (battery cover)
2. Negative battery cable
3. Insulator cover (positive battery cable)
4. Slot (battery tray)

2. Install the negative battery cable (black) to the negative (-) battery post.

3. Apply a coat of Grafo 112X (skin-over) grease, Toro Part No. 505-47 to the battery posts and battery-cable clamps.
4. Slide the rubber boot over the positive battery-cable clamp.
5. Assemble the cover over the battery, inserting the tabs of the cover into the slots in the battery tray.
6. Close and latch the hood; refer to Closing the Hood (page 44).

Charging the 12 V Battery

1. Disconnect the battery; refer to Disconnecting the 12 V Battery (page 56).
2. Connect a 3 to 4 A battery charger to the battery posts.
3. Charge the battery at a rate of 3 to 4 A for 4 to 8 hours.
4. When the battery is charged, disconnect the charger from the electrical outlet and battery posts.
5. Connect the battery; refer to Connecting the 12 V Battery (page 56).

Servicing the 12 V Battery

Service Interval: Every 50 hours

Every 50 hours

Note: Keep the terminals and the entire battery case clean because a dirty battery will discharge slowly.

1. Prepare the machine for maintenance; refer to Preparing for Maintenance (page 44).
2. Open the hood; refer to Opening the Hood (page 44).
3. Check the condition of the battery.

   Note: Replace a worn or damaged battery.
4. Disconnect the battery cables, and remove the battery from the machine; refer to Disconnecting the 12 V Battery (page 56).
5. Clean the entire battery case with a solution of sodium bicarbonate (baking soda) and water.
6. Rinse the case with clean water.
7. Assemble the battery to the machine and connect the battery cables; refer to Connecting the 12 V Battery (page 56).
8. Close and latch the hood; refer to Closing the Hood (page 44).

Replacing a 12 V Fuse-Block Fuse

The fuse block is under the seat.

1. Prepare the machine for maintenance; refer to Preparing for Maintenance (page 44).
2. Unlatch the seat base, tilt the seat base open, and support it with the prop rods (Figure 93).

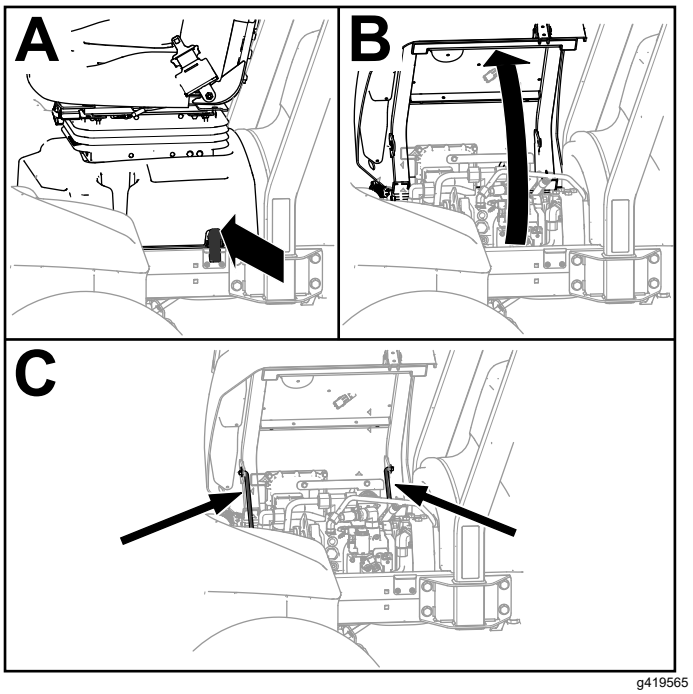

g419565

Figure 93

3. Replace the open fuse (Figure 94) with the same fuse type and amperage rating.

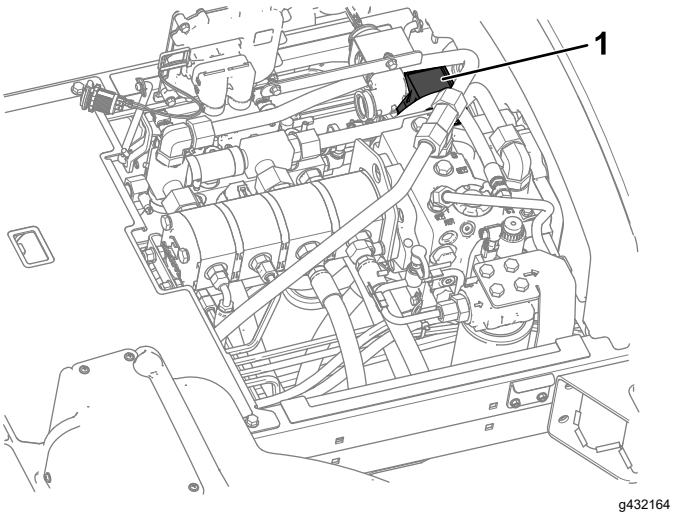

g432164

Figure 94

1. Fuse block

4. Rotate the seat and seat base closed and latch the base (Figure 95).

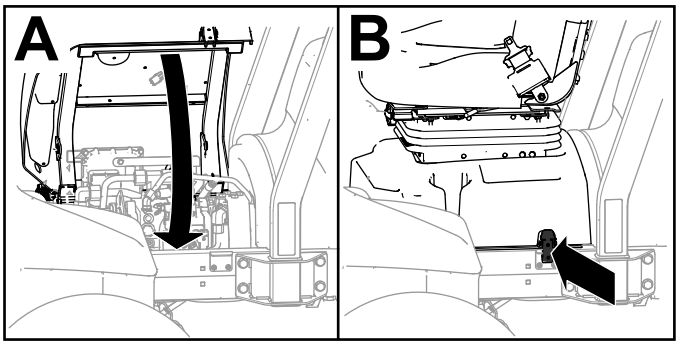

g419732

Figure 95

Replacing the TEC Fuse

1. Prepare the machine for maintenance; refer to Preparing for Maintenance (page 44).
2. Unlatch and open the hood; refer to Opening the Hood (page 44).
3. At the front, left side of the engine, remove the cover of the in-line fuse holder.

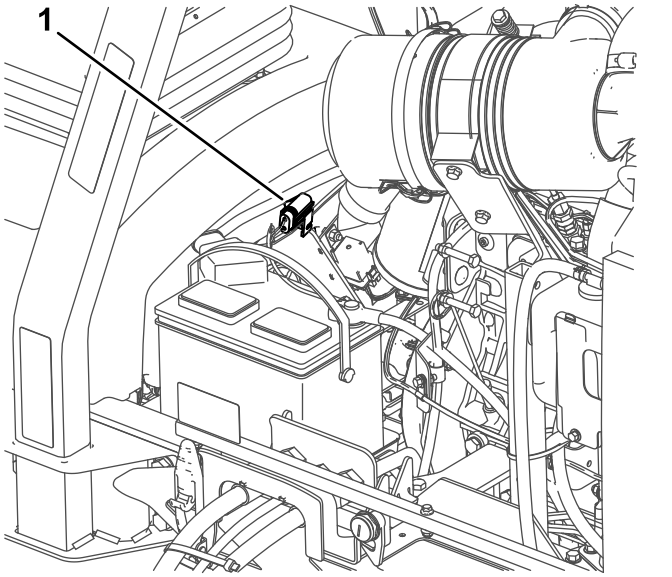

g422229

Figure 96

1. TEC fuse

4. Replace the open fuse with a fuse of the same type and amperage rating.
5. Assemble the cap to the in-line fuse holder.
6. Close and latch the hood; refer to Closing the Hood (page 44).

Drive System Maintenance

Checking the Tire Air Pressure

Service Interval: Before each use or daily

Important: **Maintain the recommended pressure in all tires to ensure a good quality of cut and proper machine performance. Do not underinflate the tires.**

1. Prepare the machine for maintenance; refer to Preparing for Maintenance (page 44).
2. Measure the tire air pressure.

   Note: The correct air pressure in the tires is 83 to 103 kPa (12 to 15 psi).
3. If needed add air to or remove air from the tire.
4. Repeat steps 2 and 3 at the other tires.

Checking the Torque of the Wheel Nuts

Service Interval: After the first hour
After the first 10 hours
Every 250 hours

⚠ WARNING

Failure to maintain proper torque of the wheel nuts could result in personal injury.

Maintain the proper torque on the wheel nuts.

1. Prepare the machine for maintenance; refer to Preparing for Maintenance (page 44).
2. Torque the wheel nuts to 94 to 122 N·m (70 to 90 ft-lb).

Checking the Rear-Wheel Alignment

Service Interval: Every 800 hours—Check the rear wheel toe-in.

1. Rotate the steering wheel to position the rear wheels straight ahead.
2. Prepare the machine for maintenance; refer to Preparing for Maintenance (page 44).
3. At axle height, measure the center-to-center distance at the front and rear of the steering tires.

Note: The rear wheel toe-in adjustment is correct if the difference between the front wheel measurement and the rear wheel measurement is 6 mm (1/4 inch) or less. (Figure 97).

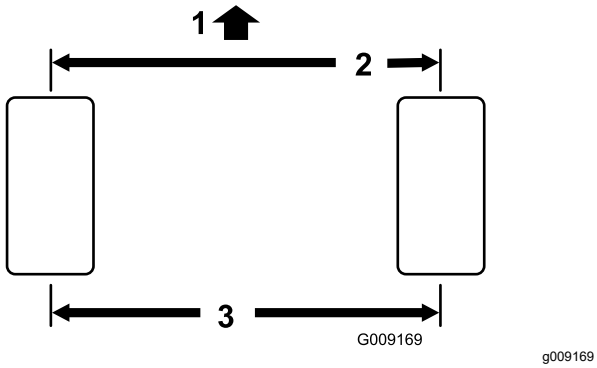

Figure 97

1. Front of the traction unit
2. 6 mm (1/4 inch) or less than the rear of the tire
3. Center-to-center distance

4. If the measurement is greater than 6 mm (1/4 inch), adjust the rear wheel toe-in; refer to Adjusting the Rear Wheel Toe-in (page 59).

Adjusting the Rear Wheel Toe-in

1. Loosen the jam nut on each end of the tie rod (Figure 98).

   Note: The end of the tie rod with the external groove is a left-hand thread.

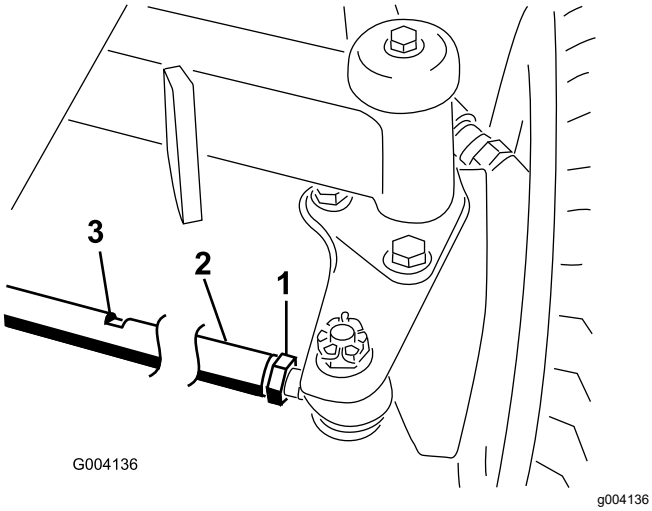

Figure 98

1. Jam nut
2. Tie rod
3. Wrench flat

2. Using the wrench flat to rotate the tie rod.
3. At axle height, measure the center-to-center distance at the front and rear of the steering tires.

   Note: The rear wheel toe-in adjustment is correct if the difference between the front wheel measurement and the rear wheel measurement is 6 mm (1/4 inch) or less.

4. Repeat steps 2 and 3 as required.
5. Tighten the jam nuts.

Cooling System Maintenance

Cooling System Safety

- Swallowing engine coolant can cause poisoning; keep out of reach from children and pets.
- Discharge of hot, pressurized coolant or touching a hot radiator and surrounding parts can cause severe burns.
  - Always allow the engine to cool at least 15 minutes before removing the radiator cap.
  - Use a rag when opening the radiator cap, and open the cap slowly to allow steam to escape.

Coolant Specification

The coolant reservoir is filled at the factory with a 50/50 solution of water and ethylene glycol base extended-life coolant.

Important: **Use only commercially available coolants that meet the specifications listed in the Extended Life Coolant Standards Table.**

Do not use conventional (green) inorganic-acid technology (IAT) coolant in your machine. Do not mix conventional coolant with extended-life coolant.

Coolant Type Table

Ethylene-Glycol Coolant Type	Corrosion Inhibitor Type
Extended-life antifreeze	Organic-acid technology (OAT)

Important: **Do not rely on the color of the coolant to identify the difference between conventional (green) inorganic-acid technology (IAT) coolant and extended-life coolant.**

Coolant manufacturers may dye extended-life coolant in one of the following colors: red, pink, orange, yellow, blue, teal, violet, and green. Use coolant that meets the specifications in the Extended Life Coolant Standards Table.

Extended Life Coolant Standards

ATSM International	SAE International
D3306 and D4985	J1034, J814, and 1941

Important: **Coolant concentration should be a 50/50 mixture of coolant to water.**

- **Preferred:** When mixing coolant from a concentrate, mix it with distilled water.
- **Preferred option:** If distilled water is not available, use a pre-mix coolant instead of a concentrate.
- **Minimum requirement:** If distilled water and pre-mix coolant are not available, mix concentrated coolant with clean drinkable water.

Checking the Coolant Level

⚠ CAUTION

If the engine has been running, the pressurized, hot coolant can escape and cause burns.

- **Do not open the radiator cap when the engine is running.**
- **Use a rag when opening the radiator cap, and open the cap slowly to allow steam to escape.**

1. Prepare the machine for maintenance; refer to Preparing for Maintenance (page 44).
2. Open the hood; refer to Opening the Hood (page 44).
3. Check the level of coolant in the expansion tank (Figure 99).

   Note: The coolant level is correct if it is between the add and full marks on the side of the tank.

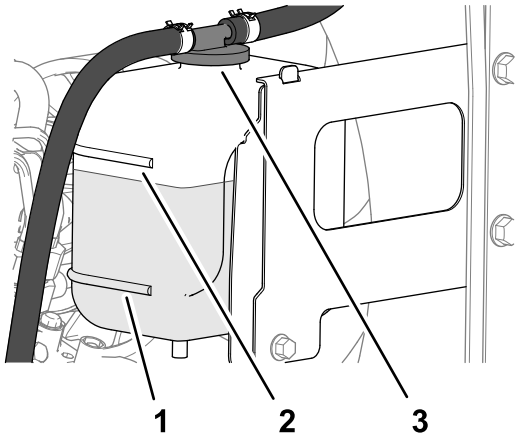

Figure 99

1. Add mark
2. Full mark
3. Expansion tank cap

4. If the coolant level is low, remove the expansion-tank cap and add the specified coolant until the level it is at the full mark.

   Note: Do not overfill the expansion tank with coolant.
5. Install the expansion-tank cap.

6. Close and latch the hood; refer to Closing the Hood (page 44).

Removing Debris from the Cooling System

Service Interval: Before each use or daily (More frequently in dirty operating conditions).

Every 100 hours—Inspect the cooling system hoses.

Every 2 years—Flush and replace the cooling system fluid.

1. Prepare the machine for maintenance; refer to Preparing for Maintenance (page 44).
2. Open the hood; refer to Opening the Hood (page 44).
3. Thoroughly clean all debris out of the engine area.
4. Close and latch the hood; refer to Closing the Hood (page 44).
5. Unlatch the rear screen and pivot it open (Figure 100).

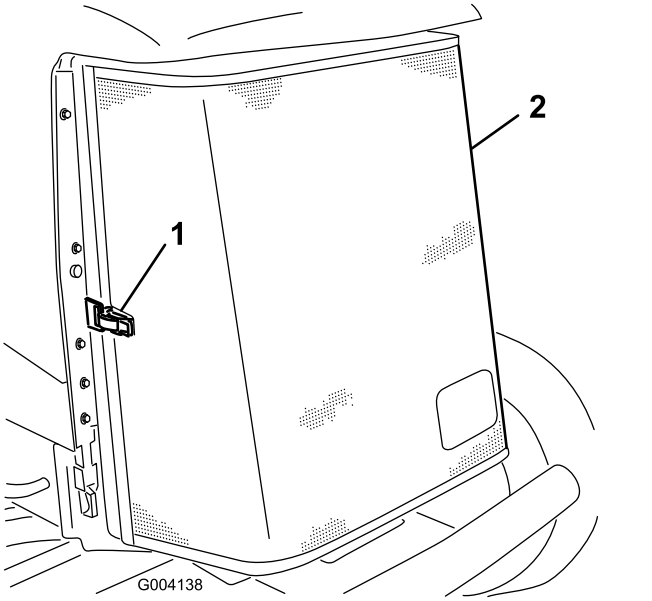

Figure 100

1. Latch
2. Rear screen

6. Thoroughly clean the screen with compressed air.
7. Rotate the 2 oil-cooler latches inward, and tilt oil cooler (Figure 101).

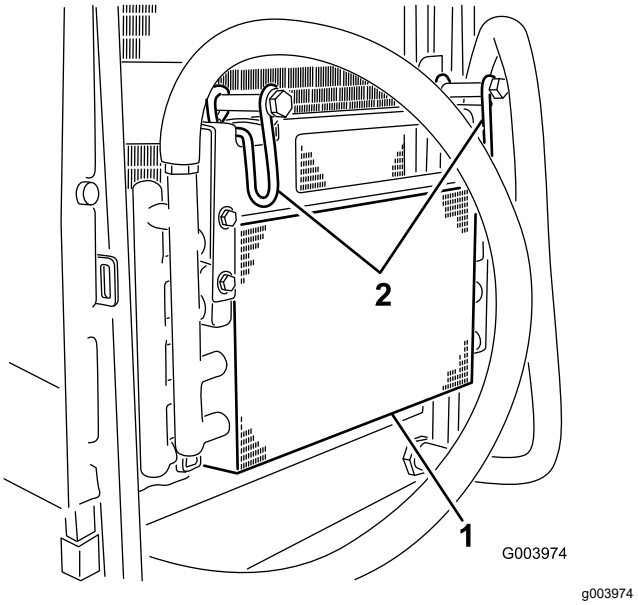

Figure 101

1. Oil cooler
2. Oil-cooler latches

8. Thoroughly clean both sides of the oil cooler and the radiator (Figure 102) with compressed air.

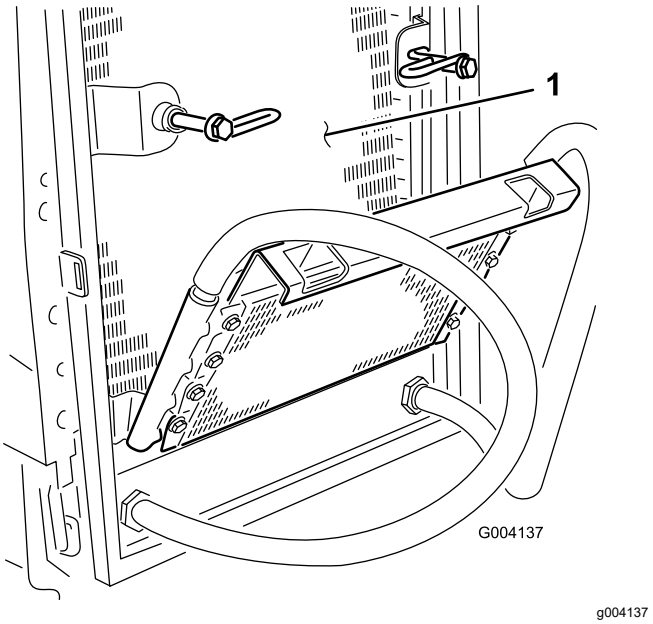

Figure 102

1. Radiator

9. Raise the oil cooler and secure it with the 2 latches.
10. Close and latch the screen.

Belt Maintenance

Servicing the Alternator Belt

Service Interval: Every 100 hours

1. Park the machine on a level surface, lower the cutting units, engage the parking brake, shut off the engine, and remove the key.
2. Open the hood; refer to Opening the Hood (page 44).
3. Check the condition of the alternator belt.

   Note: Replace a worn or damaged belt.
4. Check the belt tension.

   Note: Belt tension is correct when the belt deflects 10 mm (3/8 inch) when a force of 45 N (10 lb) is applied on the belt midway between the pulleys.
5. If belt deflection is more than or less than 10 mm (3/8 inch), loosen the alternator mounting bolts (Figure 103).

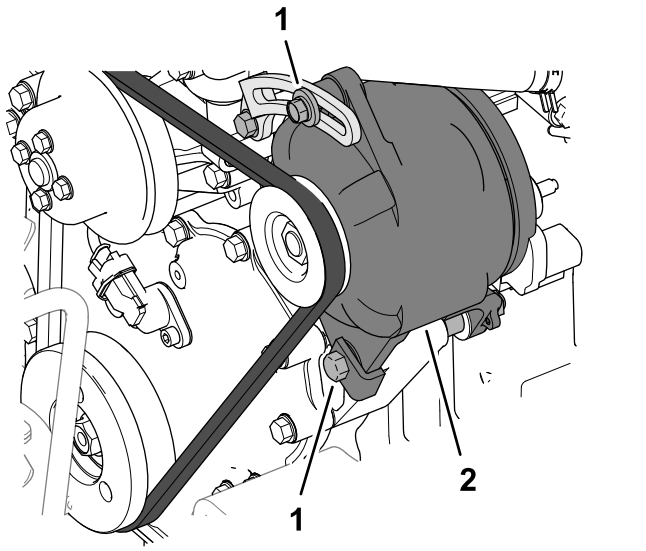

Figure 103

1. Mounting bolt
2. Alternator

6. Increase or decrease the alternator-belt tension, and tighten the mounting bolts.
7. Check the deflection of the belt again to ensure that the tension is correct.
8. Close and latch the hood; refer to Closing the Hood (page 44).

Hydraulic System Maintenance

Hydraulic System Safety

- Seek immediate medical attention if fluid is injected into skin. Injected fluid must be surgically removed within a few hours by a doctor.
- Ensure that all hydraulic-fluid hoses and lines are in good condition and all hydraulic connections and fittings are tight before applying pressure to the hydraulic system.
- Keep your body and hands away from pinhole leaks or nozzles that eject high-pressure hydraulic fluid.
- Use cardboard or paper to find hydraulic leaks.
- Safely relieve all pressure in the hydraulic system before performing any work on the hydraulic system.

Hydraulic Fluid Specifications

The reservoir is filled at the factory with high-quality hydraulic fluid. Check the level of the hydraulic fluid before you first start the engine and daily thereafter; refer to Checking the Hydraulic-Fluid Level (page 63).

Recommended hydraulic fluid: Toro PX Extended Life Hydraulic Fluid; available in 19 L (5 US gallon) pails or 208 L (55 US gallon) drums.

Note: A machine using the recommended replacement fluid requires less frequent fluid and filter changes.

Alternative hydraulic fluids: If Toro PX Extended Life Hydraulic Fluid is not available, you may use another conventional, petroleum-based hydraulic fluid having specifications that fall within the listed range for all the following material properties and that it meets industry standards. Do not use synthetic fluid. Consult with your lubricant distributor to identify a satisfactory product.

Note: Toro does not assume responsibility for damage caused by improper substitutions, so use products only from reputable manufacturers who will stand behind their recommendation.

High Viscosity Index/Low Pour Point Anti-wear Hydraulic Fluid, ISO VG 46

Material Properties:

Viscosity, ASTM D445	cSt @ 40°C (104°F) 44 to 48

High Viscosity Index/Low Pour Point Anti-wear Hydraulic Fluid, ISO VG 46 (cont'd.)

Viscosity Index ASTM D2270	140 or higher
Pour Point, ASTM D97	-37°C to -45°C (-34°F to -49°F)
Industry Specifications:	Eaton Vickers 694 (I-286-S, M-2950-S/35VQ25 or M-2952-S)

Note: Many hydraulic fluids are almost colorless, making it difficult to spot leaks. A red dye additive for the hydraulic fluid is available in 20 ml (0.67 fl oz) bottles. A bottle is sufficient for 15 to 22 L (4 to 6 US gallons) of hydraulic fluid. Order Part No. 44-2500 from your authorized Toro distributor.

Important: **Toro Premium Synthetic Biodegradable Hydraulic Fluid is the only synthetic biodegradable fluid approved by Toro. This fluid is compatible with the elastomers used in Toro hydraulic systems and is suitable for a wide-range of temperature conditions. This fluid is compatible with conventional mineral oils, but for maximum biodegradability and performance, the hydraulic system should be thoroughly flushed of conventional fluid. The oil is available in 19 L (5 US gallon) pails or 208 L (55 US gallon) drums from your authorized Toro distributor.**

Checking the Hydraulic-Fluid Level

Service Interval: Before each use or daily

The reservoir is filled at the factory with high-quality hydraulic fluid. The best time to check the hydraulic oil is when the fluid is cold. The machine should be in its transport configuration.

1. Prepare the machine for maintenance; refer to Preparing for Maintenance (page 44).
2. Clean the area around the filler neck and the cap of the hydraulic tank (Figure 104).

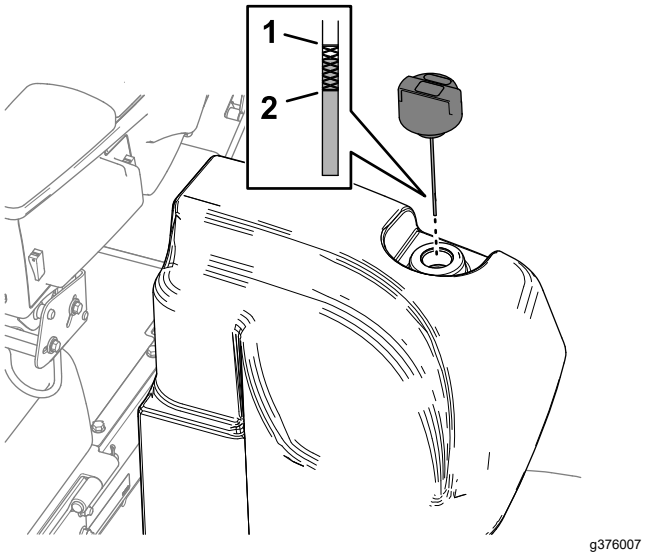

Figure 104

1. Full mark (dipstick)
2. Add mark (dipstick)

3. Remove the cap/dipstick from the filler neck and wipe it with a clean rag.
4. Insert the dipstick into the filler neck; then remove it and check the level of fluid.

   Note: The fluid level should be within operating range on the dipstick.

   Important: **Do not overfill the tank.**
5. If the level is low, add the appropriate amount of fluid to raise the level to the full mark.
6. Install the cap/dipstick onto the filler neck.

Checking the Hydraulic Lines and Hoses

Service Interval: Before each use or daily

Check the hydraulic lines and hoses for leaks, kinked lines, loose mounting supports, wear, loose fittings, weather deterioration, and chemical deterioration. Make all necessary repairs before operating.

Replacing the Hydraulic Filters

Service Interval: Every 1,000 hours—**If you are using the recommended hydraulic fluid,** replace the return-hydraulic filter and charge-hydraulic filter.

Every 800 hours—**If you are not using the recommended hydraulic fluid or have ever filled the reservoir with an alternative**

fluid, replace the return-hydraulic filter and charge-hydraulic filter.

Important: **Use of any other filters may void the warranty on some components.**

Changing the Return Filter

The hydraulic system is equipped with a return filter-service indicator (Figure 105). You view the filter-service indicator through the hole in the floor plate. With the engine running at operating temperature, check the color of the indicator as follows:

- Green indicates normal hydraulic-fluid flow through the filter.
- Ref indicates a restricted filter. Change the return filter.

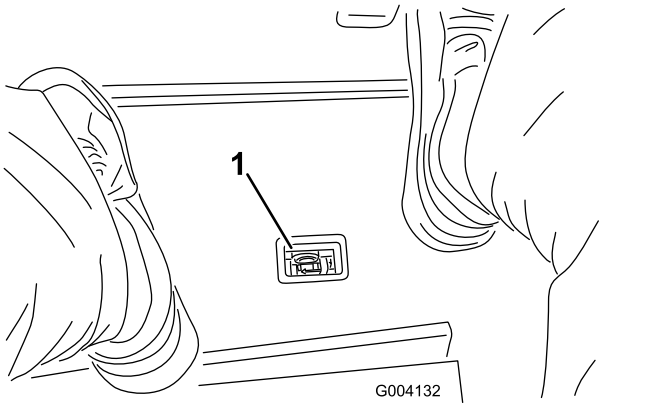

g004132

Figure 105

1. Hydraulic-filter-restriction indicator

1. Prepare the machine for maintenance; refer to Preparing for Maintenance (page 44).
2. At the front of the machine, align a drain pan under the return filter (Figure 106).

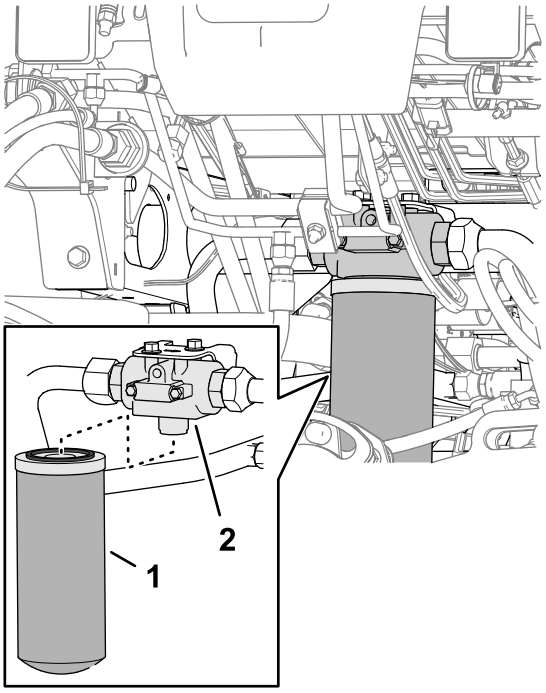

g376340

Figure 106

1. Return filter
2. Filter head

3. Remove the filter.
4. Wipe clean the filter mounting area of the filter head.
5. Apply a thin coat of the specified hydraulic fluid to the gasket of the new return filter.
6. Thread the filter onto the filter head by hand until the gasket contacts the mounting surface, then rotate the filter an additional 1/2 turn.

Changing the Charge Filter

1. Prepare the machine for maintenance; refer to Preparing for Maintenance (page 44).
2. Tilt the seat; refer to Tilting the Seat (page 45).
3. At the left side of the machine, align a drain pan under the charge filter (Figure 107).

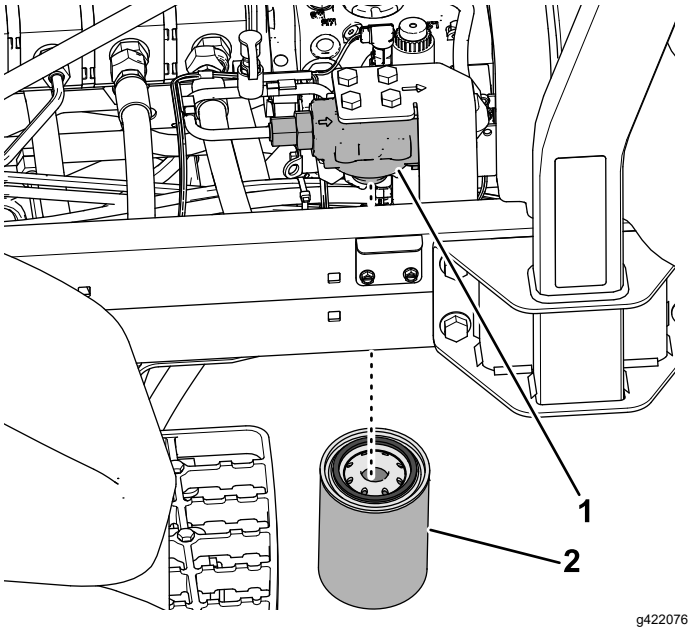

Figure 107

1. Filter head
2. Charge filter

4. Remove the filter.
5. Wipe clean the filter mounting area of the filter head.
6. Apply a thin coat of the specified hydraulic fluid to the gasket of the new charge filter.
7. Thread the filter onto the filter head by hand until the gasket contacts the mounting surface, then rotate the filter an additional 1/2 turn.
8. Lower and latch the seat; refer to Lowering the Seat (page 45).

Checking for Leaks

1. Start the engine and run it for 2 minutes to purge air from the hydraulic system.
2. Shut off the engine, remove the key, and check for leaks at the return and charge filters.

   Note: Repair all hydraulic leaks.

Hydraulic Fluid Capacity

56.7 L (15 US gallons); refer to Hydraulic Fluid Specifications (page 62)

Changing the Hydraulic Fluid

Service Interval: Every 2,000 hours—**If you are using the recommended hydraulic fluid,** change the hydraulic fluid.

Every 800 hours—**If you are not using the recommended hydraulic fluid or have ever filled the reservoir with an alternative fluid,** change the hydraulic fluid.

If the fluid becomes contaminated, contact your Toro Distributor because the system must be flushed. Contaminated fluid looks milky or black when compared to clean fluid.

1. Prepare the machine for maintenance; refer to Preparing for Maintenance (page 44).
2. Place a large drain pan under the manifold (Figure 108) on the bottom the hydraulic tank; refer to Hydraulic Fluid Capacity (page 65).

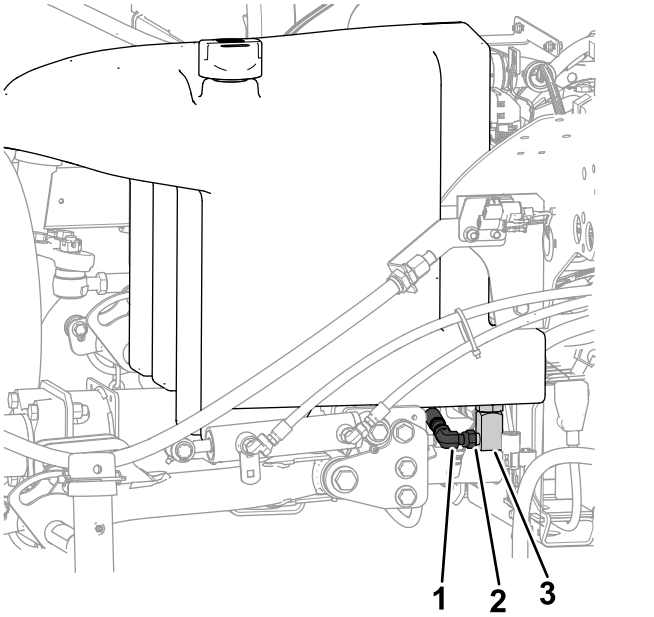

Figure 108

1. Manifold
2. Loosen fitting here
3. 90° fitting

3. Disconnect the 90° fitting from the manifold and allow the tank to drain.
4. When hydraulic fluid stops draining from the tank, connect the 90° fitting to the manifold.
5. Fill the tank with the specified hydraulic fluid; refer to Hydraulic Fluid Specifications (page 62) and Hydraulic Fluid Capacity (page 65).

   Important: **Use only the hydraulic fluids specified. Other fluids could cause system damage.**
6. Install the tank cap.
7. Start the engine, and use all the hydraulic controls to distribute hydraulic fluid throughout the system.
8. Check for hydraulic-fluid leaks; refer to Checking for Leaks (page 65).

9. Check the level; refer to Checking the Hydraulic-Fluid Level (page 63)

Cutting Unit System Maintenance

Blade Safety

A worn or damaged blade or bedknife can break, and a piece could be thrown toward you or bystanders, resulting in serious personal injury or death.

- Inspect the blades and bedknives periodically for excessive wear or damage.
- Use care when checking the blades. Wear gloves and use caution when servicing them. Only replace or backlap the blades and bedknives; never straighten or weld them.
- On machines with multiple cutting units, take care when rotating a cutting unit; it can cause the reels in the other cutting units to rotate.

Checking the Reel-to-Bedknife Contact

Service Interval: Before each use or daily

Check the reel-to-bedknife contact, regardless of whether the quality of cut had previously been acceptable. There must be light contact across the full length of the reel and the bedknife (refer to Adjusting the Reel to Bedknife in the cutting unit *Operator's Manual*).

Backlapping the Cutting Units

⚠ WARNING

Contact with the cutting units or other moving parts can result in personal injury.

- **Keep your fingers, hands, and clothing away from the cutting units and other moving parts.**
- **Never attempt to turn the cutting units by hand or foot while the engine is running.**

Note: Additional instructions and procedures on backlapping are available in the Toro Reel Mower Basics (with sharpening guidelines), Form 09168SL.

Preparing the Machine

1. Prepare the machine for maintenance; refer to Preparing for Maintenance (page 44).
2. Press the PTO switch to the DISENGAGE position.

3. Make initial reel-to-bedknife adjustments appropriate for backlapping on all cutting units which are to be backlapped; refer to the cutting unit *Operator's Manual*.
4. Unlock and raise the seat to expose the mower manifold (Figure 109).

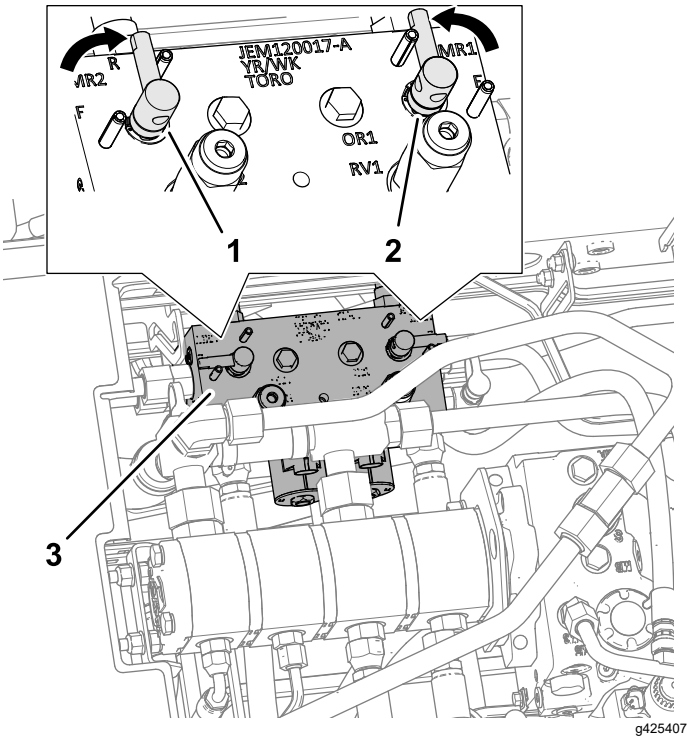

Figure 109

1. Backlap lever (backlap position—front cutting units)
2. Backlap lever (backlap position—rear cutting units)
3. Mower manifold

5. Move the backlap levers to the R (backlap) position (Figure 109).

   Note: Select either the front, rear, or both backlap levers to control which cutting units to backlap. When backlapping, the front cutting units all operate together, and the rear cutting units operate together.

Lapping the Reels and Bedknife

⚠ DANGER

Changing the engine speed while backlapping may cause the reels to stall.

- **Never change the engine speed while backlapping.**
- **Only backlap at idle engine speed.**

1. Start the engine and run at low idle speed.
2. With the Mow/Transport lever in the MOW position, press the PTO switch to the DISENGAGE position. Move the Lower Mow/Lift control forward to start the backlapping operation on the designated reels.
3. Apply lapping compound with a long-handled brush.

⚠ DANGER

Contacting the cutting units when they are moving could cause personal injury.

To avoid personal injury, be certain that you are clear of the cutting units before proceeding.

Important: **Never use a short-handled brush.**

4. If the reels stall or become erratic while backlapping, select a higher reel-speed setting until the speed stabilizes, then return the reel speed to your desired speed.
5. If you need to make an adjustment to the cutting units while backlapping, perform the following steps:
   A. Move the Lower Mow/Raise lever rearward and press the PTO switch to the DISENGAGE position.
   B. Shut off the engine and remove the key.
   C. Adjust the cutting units.
   D. Repeat steps 1 through 3.
6. Repeat steps 3 for the other cutting units that you want to backlap.

Finishing Backlapping

1. Moving the Lower Mow/Raise lever rearward and press the PTO switch to the DISENGAGE position.
2. Shut off the engine and remove the key.
3. Move the backlap levers to the F (mow) position (Figure 110).

   Important: **If you do not change backlap lever to the F (mow) position after backlapping, the cutting units will not function properly.**

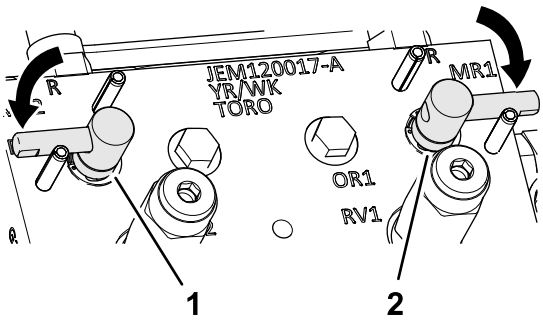

Figure 110

1. Backlap lever (mow position—front cutting units)
2. Backlap lever (mow position—rear cutting units)

4. Lower and latch the operator's seat; refer to Lowering the Seat (page 45).
5. Wash all lapping compound off from the cutting units.
6. For a better cutting edge, run a file across the front face of the bedknife after lapping.

   Note: This removes any burrs or rough edges that may have built up on the cutting edge.

Inspecting the Seat Belt

Service Interval: Before each use or daily

1. Inspect the seat belt for wear, cuts, and other damage. Replace the seat belt(s) if any component does not operate properly.
2. Clean the seat belt as necessary.

Extended Chassis Maintenance

Chassis and Engine

Service Interval: Every 2 years—Replace the hydraulic hoses.

Every 2 years—Replace the coolant hoses.

Every 2 years—Flush and replace the coolant.

Cleaning

Washing the Machine

Wash the machine as needed using water alone or with a mild detergent. You may use a rag when washing the machine.

Important: **Do not use brackish or reclaimed water to clean the machine.**

Important: **Do not use power-washing equipment to wash the machine. Power-washing equipment may damage the electrical system, loosen important decals, or wash away necessary grease at friction points. Avoid excessive use of water near the control panel, engine, and battery.**

Important: **Do not wash the machine with the engine running. Doing so may result in internal engine damage.**

Storage

Storage Safety

- Before you leave the operator's position, do the following:
  - Park the machine on a level surface.
  - Disengage and lower the cutting units.
  - Engage the parking brake.
  - Shut off the engine and remove the key.
  - Wait for all movement to stop.
  - Allow the machine to cool before adjusting, servicing, cleaning, or storing it.
- Do not store the machine or fuel container where there is an open flame, spark, or pilot light, such as on a water heater or other appliance.

Preparing the Traction Unit

1. Park the machine on a level surface, lower the cutting units, engage the parking brake, shut off the engine, and remove the key.
2. Thoroughly clean the traction unit, cutting units, and the engine.
3. Check the tire pressure; refer to Checking the Tire Air Pressure (page 58).
4. Check all fasteners for looseness; tighten them as necessary.
5. Grease or oil all grease fittings and pivot points. Wipe up any excess lubricant.
6. Lightly sand and use touch-up paint on painted areas that are scratched, chipped, or rusted. Repair any dents in the metal body.
7. Service the battery and cables as follows; refer to Servicing the 12 V Battery (page 57):
   A. Remove the battery terminals from the battery posts.
   B. Clean the battery, terminals, and posts with a wire brush and baking-soda solution.
   C. Coat the cable terminals and battery posts with Grafo 112X skin-over grease (Toro Part No. 505-47) or petroleum jelly to prevent corrosion.
   D. Slowly charge the battery every 60 days for 24 hours to prevent lead sulfation of the battery.

Preparing the Engine

1. Drain the engine oil from the oil pan and install the drain plug.
2. Remove and discard the oil filter. Install a new oil filter.
3. Fill the engine with specified motor oil.
4. Start the engine and run it at idle speed for approximately 2 minutes.
5. Shut off the engine and remove the key.
6. Flush the fuel tank with fresh, clean fuel.
7. Secure all the fuel-system fittings.
8. Thoroughly clean and service the air-cleaner assembly.
9. Seal the air-cleaner inlet and the exhaust outlet with weatherproof tape.
10. Check the antifreeze protection and add a 50/50 solution of water and ethylene glycol antifreeze as needed for the expected minimum temperature in your area.

Storing the Battery

If you are storing the machine for more than 30 days, remove the battery and charge it fully. Store it either on the shelf or on the machine. Leave the cables disconnected if they are stored on the machine. Store the battery in a cool atmosphere to avoid quick deterioration of the charge in the battery. To prevent the battery from freezing, ensure that it is fully charged. The specific gravity of a fully charged battery is 1.265 to 1.299.

Notes:

Notes:

Notes:

California Proposition 65 Warning Information

What is this warning?

You may see a product for sale that has a warning label like the following:



WARNING: Cancer and Reproductive Harm—www.p65Warnings.ca.gov.

What is Prop 65?

Prop 65 applies to any company operating in California, selling products in California, or manufacturing products that may be sold in or brought into California. It mandates that the Governor of California maintain and publish a list of chemicals known to cause cancer, birth defects, and/or other reproductive harm. The list, which is updated annually, includes hundreds of chemicals found in many everyday items. The purpose of Prop 65 is to inform the public about exposure to these chemicals.

Prop 65 does not ban the sale of products containing these chemicals but instead requires warnings on any product, product packaging, or literature with the product. Moreover, a Prop 65 warning does not mean that a product is in violation of any product safety standards or requirements. In fact, the California government has clarified that a Prop 65 warning "is not the same as a regulatory decision that a product is 'safe' or 'unsafe.'" Many of these chemicals have been used in everyday products for years without documented harm. For more information, go to https://oag.ca.gov/prop65/faqs-view-all.

A Prop 65 warning means that a company has either (1) evaluated the exposure and has concluded that it exceeds the "no significant risk level"; or (2) has chosen to provide a warning based on its understanding about the presence of a listed chemical without attempting to evaluate the exposure.

Does this law apply everywhere?

Prop 65 warnings are required under California law only. These warnings are seen throughout California in a wide range of settings, including but not limited to restaurants, grocery stores, hotels, schools, and hospitals, and on a wide variety of products. Additionally, some online and mail order retailers provide Prop 65 warnings on their websites or in catalogs.

How do the California warnings compare to federal limits?

Prop 65 standards are often more stringent than federal and international standards. There are various substances that require a Prop 65 warning at levels that are far lower than federal action limits. For example, the Prop 65 standard for warnings for lead is 0.5 µg/day, which is well below the federal and international standards.

Why don't all similar products carry the warning?

- Products sold in California require Prop 65 labelling while similar products sold elsewhere do not.
- A company involved in a Prop 65 lawsuit reaching a settlement may be required to use Prop 65 warnings for its products, but other companies making similar products may have no such requirement.
- The enforcement of Prop 65 is inconsistent.
- Companies may elect not to provide warnings because they conclude that they are not required to do so under Prop 65; a lack of warnings for a product does not mean that the product is free of listed chemicals at similar levels.

Why does Toro include this warning?

Toro has chosen to provide consumers with as much information as possible so that they can make informed decisions about the products they buy and use. Toro provides warnings in certain cases based on its knowledge of the presence of one or more listed chemicals without evaluating the level of exposure, as not all the listed chemicals provide exposure limit requirements. While the exposure from Toro products may be negligible or well within the "no significant risk" range, out of an abundance of caution, Toro has elected to provide the Prop 65 warnings. Moreover, if Toro does not provide these warnings, it could be sued by the State of California or by private parties seeking to enforce Prop 65 and subject to substantial penalties.

The Toro Warranty

Two-Year or 1,500 Hours Limited Warranty

Conditions and Products Covered

The Toro Company warrants your Toro Commercial product (“Product”) to be free from defects in materials or workmanship for 2 years or 1,500 operational hours*, whichever occurs first. This warranty is applicable to all products with the exception of Aerators (refer to separate warranty statements for these products). Where a warrantable condition exists, we will repair the Product at no cost to you including diagnostics, labor, parts, and transportation. This warranty begins on the date the Product is delivered to the original retail purchaser.
* Product equipped with an hour meter.

Instructions for Obtaining Warranty Service

You are responsible for notifying the Commercial Products Distributor or Authorized Commercial Products Dealer from whom you purchased the Product as soon as you believe a warrantable condition exists. If you need help locating a Commercial Products Distributor or Authorized Dealer, or if you have questions regarding your warranty rights or responsibilities, you may contact us at:

Toro Commercial Products Service Department
8111 Lyndale Avenue South
Bloomington, MN 55420-1196

952–888–8801 or 800–952–2740
E-mail: commercial.warranty@toro.com

Owner Responsibilities

As the product owner, you are responsible for required maintenance and adjustments stated in your *Operator's Manual*. Repairs for product issues caused by failure to perform required maintenance and adjustments are not covered under this warranty.

Items and Conditions Not Covered

Not all product failures or malfunctions that occur during the warranty period are defects in materials or workmanship. This warranty does not cover the following:

- Product failures which result from the use of non-Toro replacement parts, or from installation and use of add-on, or modified non-Toro branded accessories and products.
- Product failures which result from failure to perform recommended maintenance and/or adjustments.
- Product failures which result from operating the Product in an abusive, negligent, or reckless manner.
- Parts consumed through use that are not defective. Examples of parts which are consumed, or used up, during normal Product operation include, but are not limited to, brake pads and linings, clutch linings, blades, reels, rollers and bearings (sealed or greasable), bed knives, spark plugs, castor wheels and bearings, tires, filters, belts, and certain sprayer components such as diaphragms, nozzles, flow meters, and check valves.
- Failures caused by outside influence, including, but not limited to, weather, storage practices, contamination, use of unapproved fuels, coolants, lubricants, additives, fertilizers, water, or chemicals.
- Failure or performance issues due to the use of fuels (e.g. gasoline, diesel, or biodiesel) that do not conform to their respective industry standards.
- Normal noise, vibration, wear and tear, and deterioration. Normal “wear and tear” includes, but is not limited to, damage to seats due to wear or abrasion, worn painted surfaces, scratched decals or windows.

Parts

Parts scheduled for replacement as required maintenance are warranted for the period of time up to the scheduled replacement time for that part. Parts replaced under this warranty are covered for the duration of the original product warranty and become the property of Toro. Toro will make the final decision whether to repair any existing part or assembly or replace it. Toro may use remanufactured parts for warranty repairs.

Deep Cycle and Lithium-Ion Battery Warranty

Deep cycle and Lithium-Ion batteries have a specified total number of kilowatt-hours they can deliver during their lifetime. Operating, recharging, and maintenance techniques can extend or reduce total battery life. As the batteries in this product are consumed, the amount of useful work between charging intervals will slowly decrease until the battery is completely worn out. Replacement of worn out batteries, due to normal consumption, is the responsibility of the product owner.
Note: (Lithium-Ion battery only): Refer to the battery warranty for additional information.

Lifetime Crankshaft Warranty (ProStripe 02657 Model Only)

The Prostripe which is fitted with a genuine Toro Friction Disc and Crank-Safe Blade Brake Clutch (integrated Blade Brake Clutch (BBC) + Friction Disc assembly) as original equipment and used by the original purchaser in accordance with recommended operating and maintenance procedures, are covered by a Lifetime Warranty against engine crankshaft bending. Machines fitted with friction washers, Blade Brake Clutch (BBC) units and other such devices are not covered by the Lifetime Crankshaft Warranty.

Maintenance is at Owner’s Expense

Engine tune-up, lubrication, cleaning and polishing, replacement of filters, coolant, and completing recommended maintenance are some of the normal services Toro products require that are at the owner’s expense.

General Conditions

Repair by an Authorized Toro Distributor or Dealer is your sole remedy under this warranty.

The Toro Company is not liable for indirect, incidental or consequential damages in connection with the use of the Toro Products covered by this warranty, including any cost or expense of providing substitute equipment or service during reasonable periods of malfunction or non-use pending completion of repairs under this warranty. Except for the Emissions warranty referenced below, if applicable, there is no other express warranty. All implied warranties of merchantability and fitness for use are limited to the duration of this express warranty.

Some states do not allow exclusions of incidental or consequential damages, or limitations on how long an implied warranty lasts, so the above exclusions and limitations may not apply to you. This warranty gives you specific legal rights, and you may also have other rights which vary from state to state.

Note Regarding Emissions Warranty

The Emissions Control System on your Product may be covered by a separate warranty meeting requirements established by the U.S. Environmental Protection Agency (EPA) and/or the California Air Resources Board (CARB). The hour limitations set forth above do not apply to the Emissions Control System Warranty. Refer to the Engine Emission Control Warranty Statement supplied with your product or contained in the engine manufacturer’s documentation.

Countries Other than the United States or Canada

Customers who have purchased Toro products exported from the United States or Canada should contact their Toro Distributor (Dealer) to obtain guarantee policies for your country, province, or state. If for any reason you are dissatisfied with your Distributor's service or have difficulty obtaining guarantee information, contact your Authorized Toro Service Center.



Count on it.