FORM NO. 3311-910

TORO®

MODEL NO. 16320-2000001 & UP

PARTS CATALOG

21" S.P. FINGERTIP START SIDE DISCHARGE

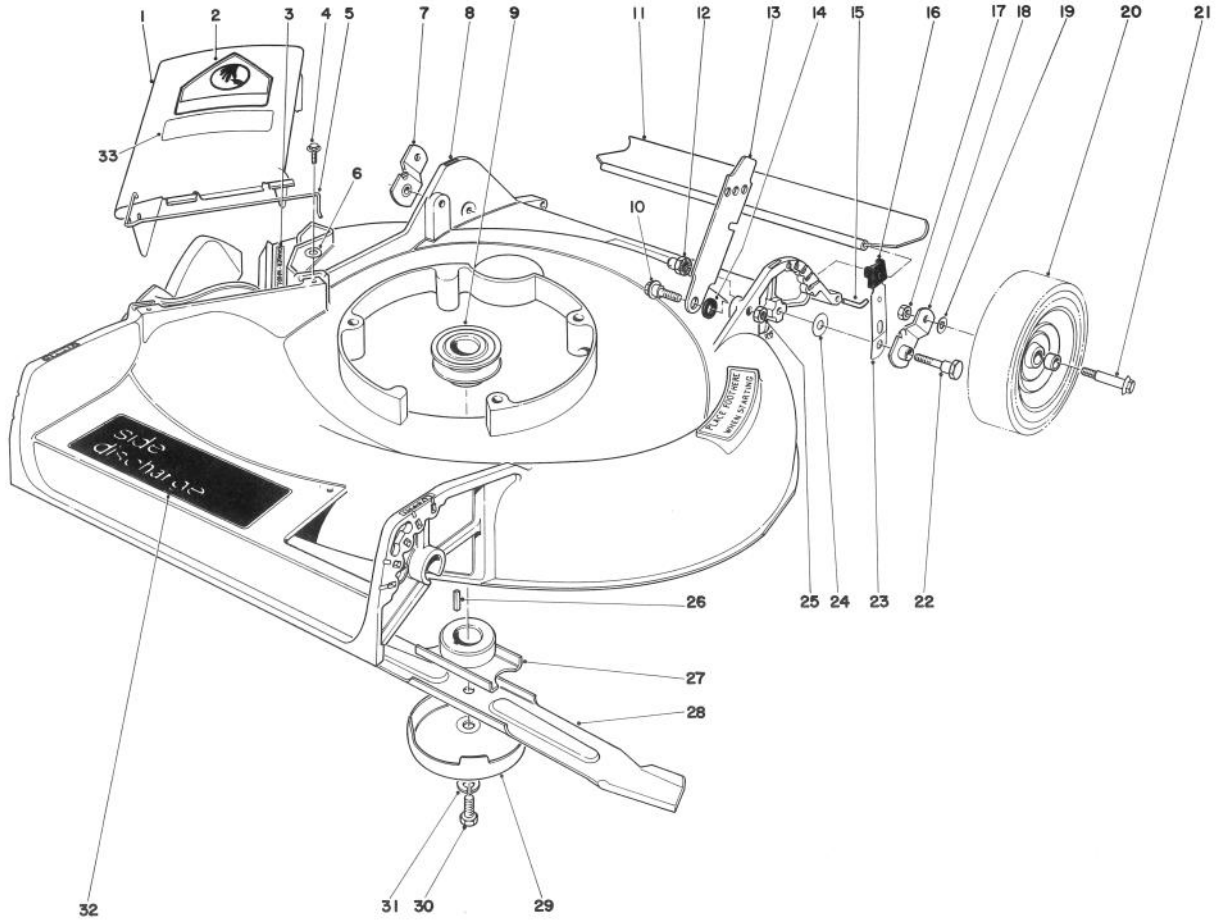

HOUSING ASSEMBLY

Ref. No.	Part No.	Description	No. Used
1	27-7810	Deflector Cover Assembly (Incl. Ref. #2, 5 & 33)	1
2	39-5770	Decal – Danger	1
3	22-7350	Decal – Danger	1
4	12-3270	Screw – Special	2
5	20-2640	Hinge Spring	1
6	3256-22	Washer	2
7	20-2130	Pivot Arm "B"	1
8	8-7629	Housing (Incl. Ref. #3)	1
9	21-5580	Pulley – Driver	1
10	27-7210	Shoulder Screw	2
11	22-4950	Rear Shield	1
12	12-2080	Handle Pivot Nut	2
13	5-2446	Handle Latch	2
14	27-6510	Spacer – Handle Latch	2

Ref. No.	Part No.	Description	No. Used
15	33-3201	Rod Shield	1
16	25-7740	Knob Arm	2
17	32146-6	Nut	2
18	20-2140	Pivot Arm "A"	1
19	40-1940	Washer – Wheel Bolt	2
20	27-6200	Wheel & Tire Assembly	2
21	27-6230	Wheel Bolt	2
22	3-0655	Pivot Screw	2
23	25-8000	Spring Arm	2
24	5-4460	Pivot Washer	2
25	32146-5	Nut	2
26	27-6300	Key Square	1
27	20-2750	Blade Retainer	1
28	20-2720	Blade	1
29	8-4240	Cup Anti Scalp	1

COPYRIGHT © ALL RIGHTS RESERVED
The Toro Company – 1982
MINNEAPOLIS, MN 55420 – U.S.A.

PRICE $1.00

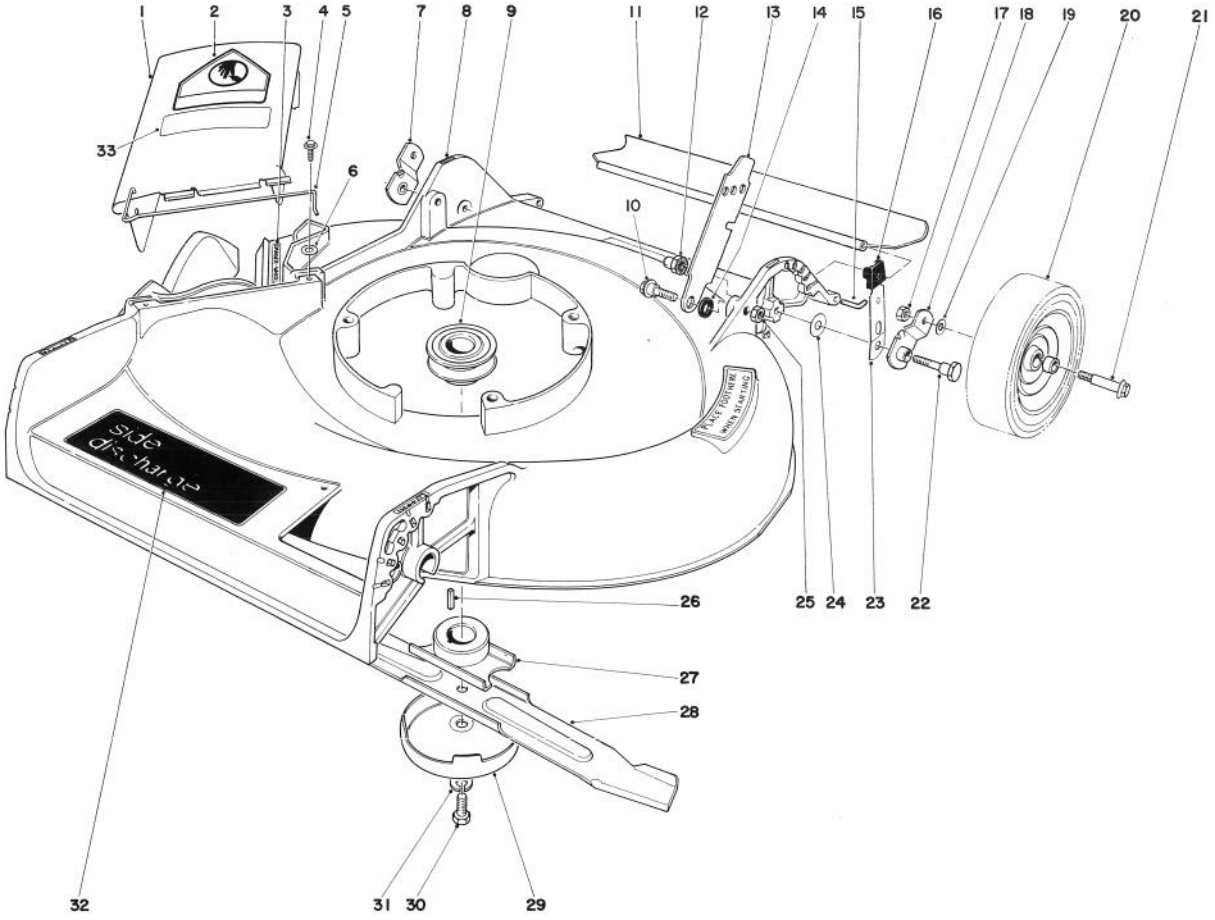

HOUSING ASSEMBLY (Continued)

Ref. No.	Part No.	Description	No. Used
30	3-5246	Screw Special	1
31	3253-22	Lockwasher	1
32	44-0440	Decal — Side Discharge	1
33	39-9130	Decal — Deflector	1

Ref. No.	Part No.	Description	No. Used
*	11-2379	Loose Parts	1
*	25-9150	Decal — Replacement Serial Plate	1

*Not Illustrated

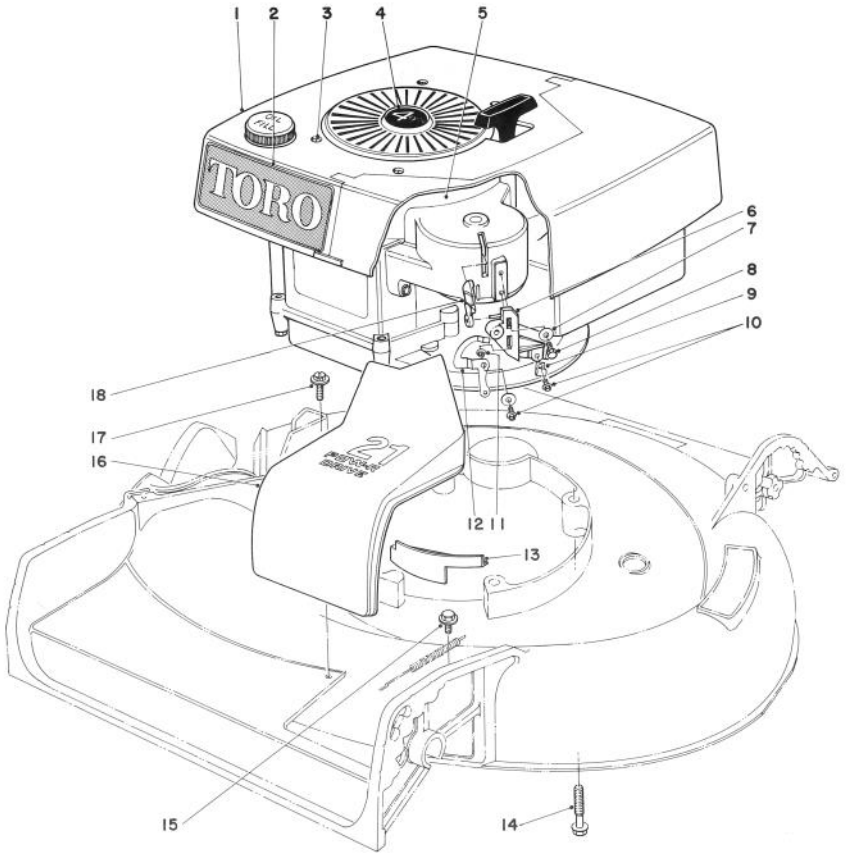

ENGINE ASSEMBLY

Ref. No.	Part No.	Description	No. Used
1	37-9830	Shroud	1
2	44-0510	Decal — Toro	1
3	32144-60	Screw	4
4	38-0790	Decal — 4 Cycle	1
5	221-609	Engine	1
6	27-9280	Block — Cable & Pivot	1
7	3256-14	Washer	3
8	32144-19	Screw	2
9	2412-63	Casing Clamp	1
10	32104-76	Screw	2

Ref. No.	Part No.	Description	No. Used
11	25-0520	Bushing Cam Interlock	1
12	25-8150	Cam Interlock	1
13	27-7470	Cap Housing	1
14	11-0580	Screw	3
15	32144-11	Hex Hd. Thread Forming Screw	1
16	28-4730	Cover — Belt Drive	1
17	12-5450	Screw Special	2
18	25-0350	Lever Interlock	1

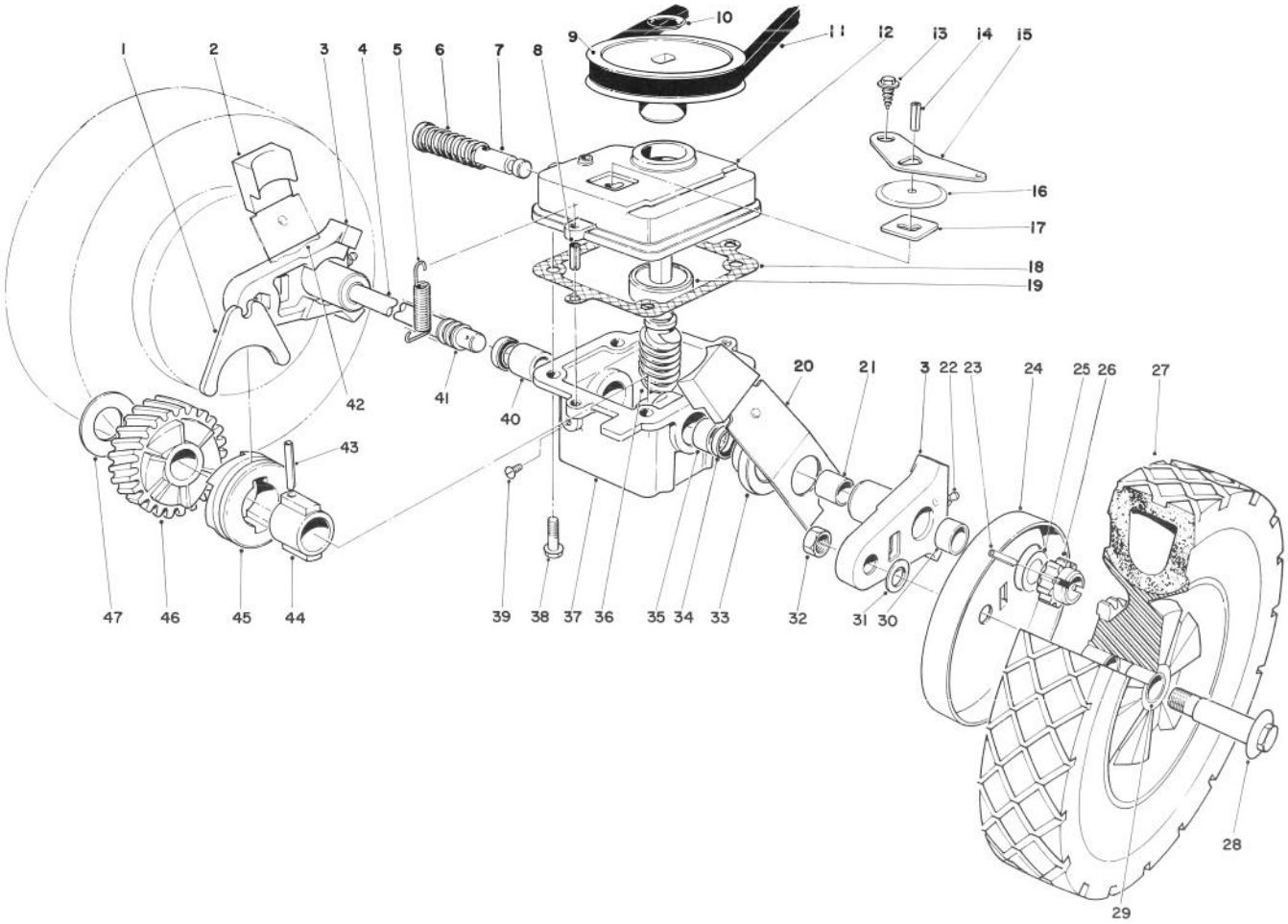

GEAR BOX ASSEMBLY

Ref. No.	Part No.	Description	No. Used
1	5-3247	Shifter Fork	1
2	25-7740	Knob Arm	2
3	38-2220	Pivot Arm (Incl. Ref. #21, 22 & 30)	2
4	37-9440	Drive Shaft	1
5	17-4490	Spring – Belt Tension	1
6	3-0731	Spring	1
7	5-3248	Shifter Rod	1
8	32121-1	Roll Pin	2
9	20-2780	Pulley	1
10	3290-346	Push On Retainer	1
11	5-4505	V-Belt	1
12	39-1100	Gear Case Cover (used on units with serial no. 2006878 & up)	1
*	33-2080	Gear Case Cover (used on units with serial no. 2000101 thru 2006877)	1
13	32140-64	Self Tapping Screw	1
14	32121-23	Roll Pin	1
15	5-3252	Shifter Arm	1
16	3-2615	Transmission Dust Cover	1
17	3-0681	Latch Plate	1

*Not Illustrated

Ref. No.	Part No.	Description	No. Used
18	36-1000	Gasket – Gear Case	1
19	251-284	Ball Bearing (used on units with serial no. 2006878 & up)	1
*	251-144	Ball Bearing (used on units with serial no. 2000101 thru 2006877)	1
20	25-7930	Spring Arm Assembly L.H.	1
21	256-206	Bushing	2
22	302-18	Grease Fitting	2
23	32121-98	Spiral Pin	2
24	18-9820	Wheel Cover	2
25	18-9810	Thrust Washer	2
26	18-9690	Pinion Gear	2
27	11-1419	Wheel & Tire Assembly (Incl. Ref. #29)	2
28	27-6230	Wheel Bolt	2
29	27-6250	Bushing	4
30	256-1	Bushing	2
31	40-1940	Washer – Wheel Bolt	2
32	32146-6	Nut	2
33	3-2646	End Cap	2
34	253-140	Oil Seal	2
35	256-110	Bushing	1

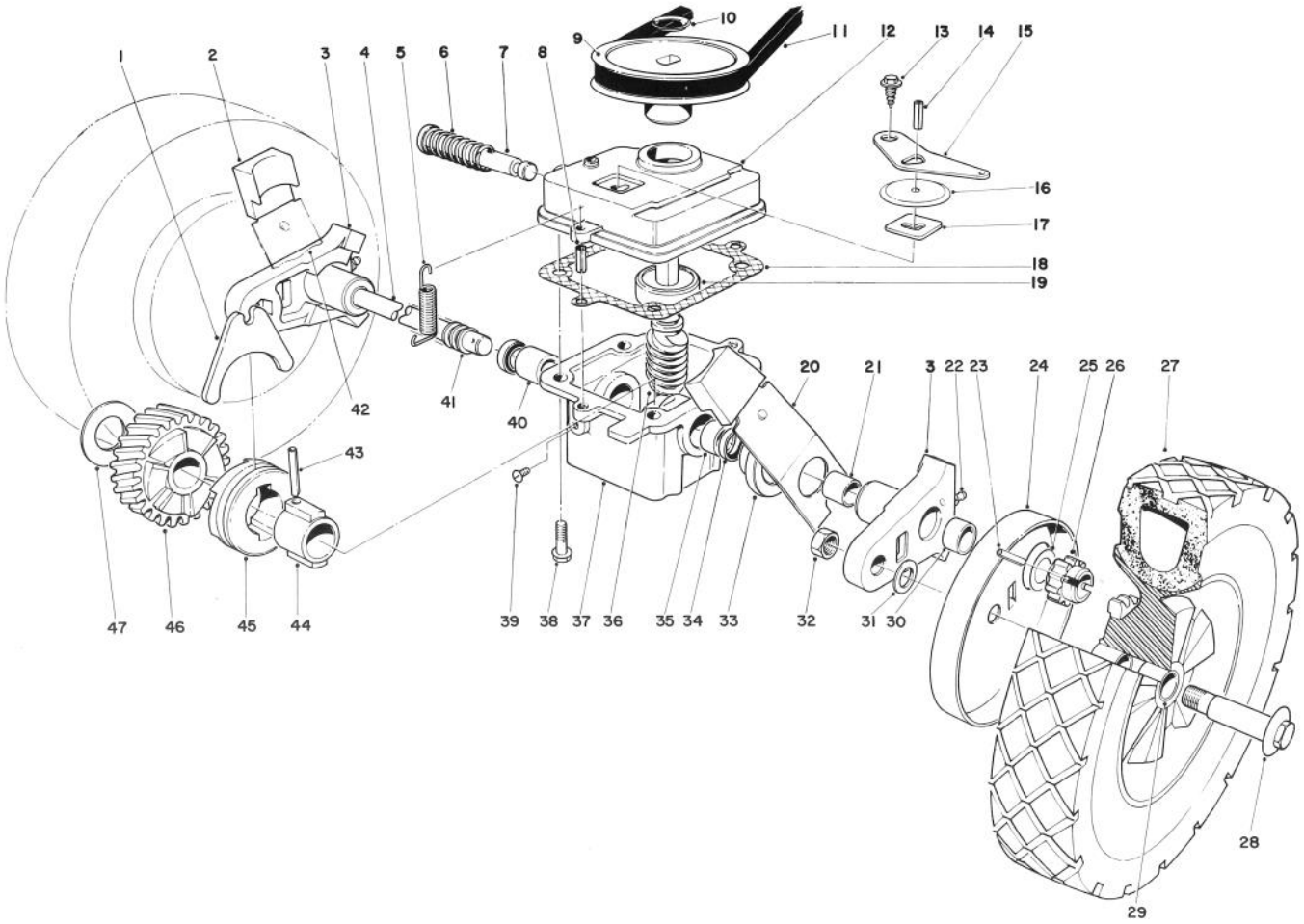

GEAR BOX ASSEMBLY (Contined)

Ref. No.	Part No.	Description	No. Used
36	8-5679	Worm Shaft & Gear (Incl. Ref. #46) (used on units with serial no. 2006878 & up)	1
*	6-9949	Worm Shaft & Gear (Incl. Ref. #46) (used on units with serial no. 2000101 thru 2006877)	1
37	8-0479	Gear Case (Incl. Ref. #34, 35 & 40)	1
38	11-9760	Screw	4

Ref. No.	Part No.	Description	No. Used
39	28-1550	Screw Nylon	1
40	256-263	Bushing	1
41	24-7920	Cover Drive Shaft	1
42	25-7920	Spring Arm Assembly R.H.	1
43	32121-88	Coil Pin	1
44	3-0721	Sleeve	1
45	19-5660	Clutch Jaw	1
46		Helical Gear	1
47	3-0724	Thrust Washer	1
*	8-6889	Gear Case Assembly Complete	1

*Not Illustrated

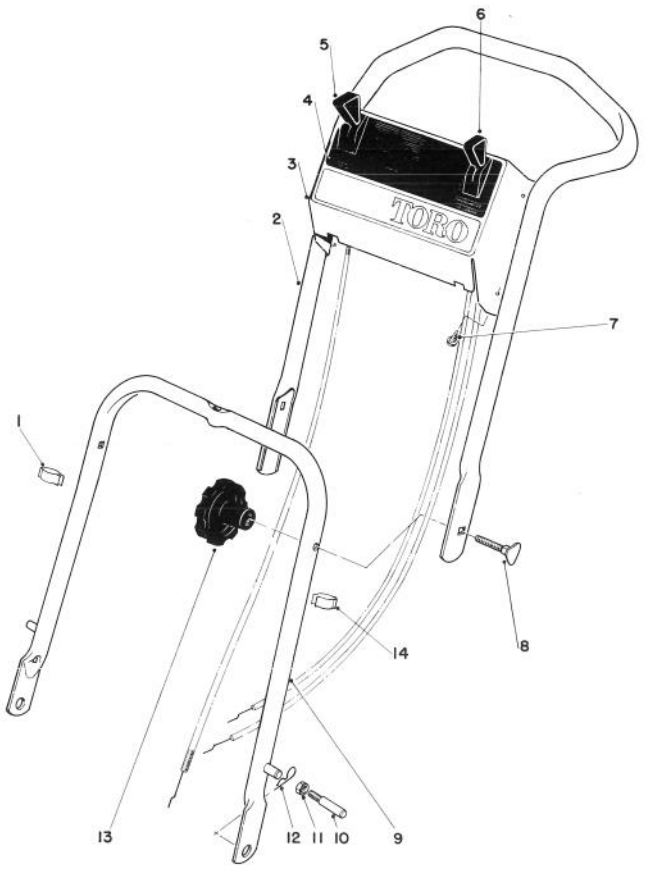

HANDLE ASSEMBLY

Ref. No.	Part No.	Description	No. Used
1	218-466	Clip	1
2	26-0540	Upper Handle	1
3	11-2919	Control Plate (Incl. Ref. #4)	1
4	39-6590	Decal – Control Plate	1
5	39-5870	Throttle Control	1
6	39-5880	Traction Control	1
7	32104-76	Screw Self Tapping	4

Ref. No.	Part No.	Description	No. Used
8	17-9420	Handle Screw	2
9	42-1480	Lower Handle	1
10	17-9380	Handle Pin	2
11	32146-8	Locknut	2
12	3290-255	Hair Pin Cotter	2
13	19-4050	Knob – Handle	2
14	218-465	Clip	1

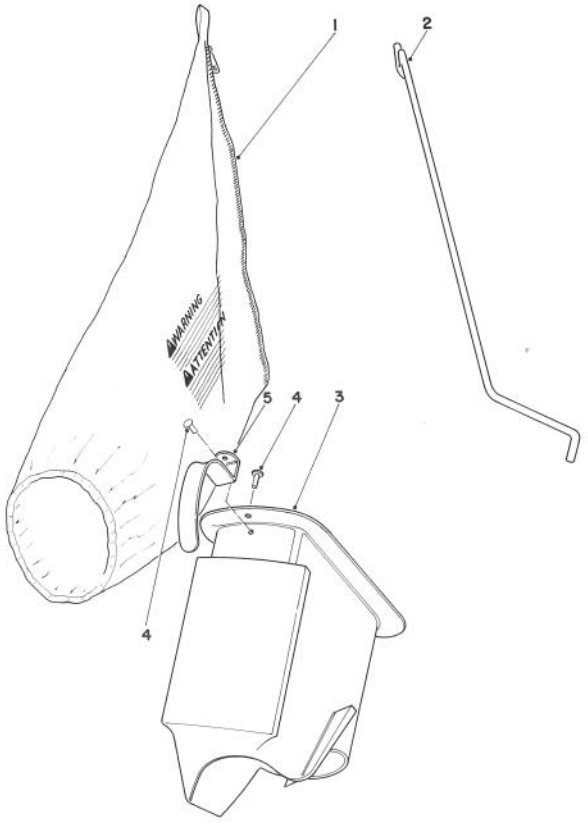

BAGGING KIT NO. 36-8380 (Optional)

Ref. No.	Part No.	Description	No. Used
1	6-0929	Grass Bag	1
2	20-4590	Bag Rod	1
3	6-1089	Grass Chute (Incl. Ref. #4 & 5)	1

Ref. No.	Part No.	Description	No. Used
4	3295-26	Rivet	2
5	20-4650	Handle Chute	1

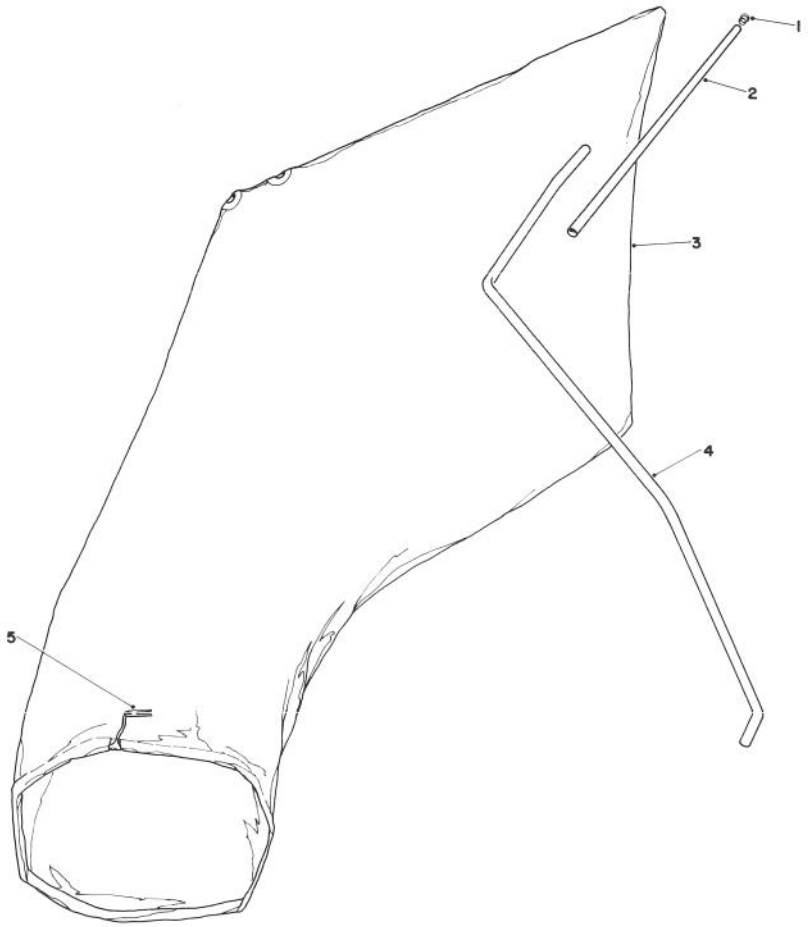

GIANT BAGGING KIT NO. 29-9750 (Optional)

Ref. No.	Part No.	Description	No. Used
1	2410-29	Cap	1
2	29-7000	Tube 25"	1
*	11-0650	Tube 28"	1
3	8-4719	Bag (Incl. Ref. #5)	1
4	22-4820	Hanger Rod	1
5	3-2781	Bag Cord Fasteners	1

*Not Illustrated

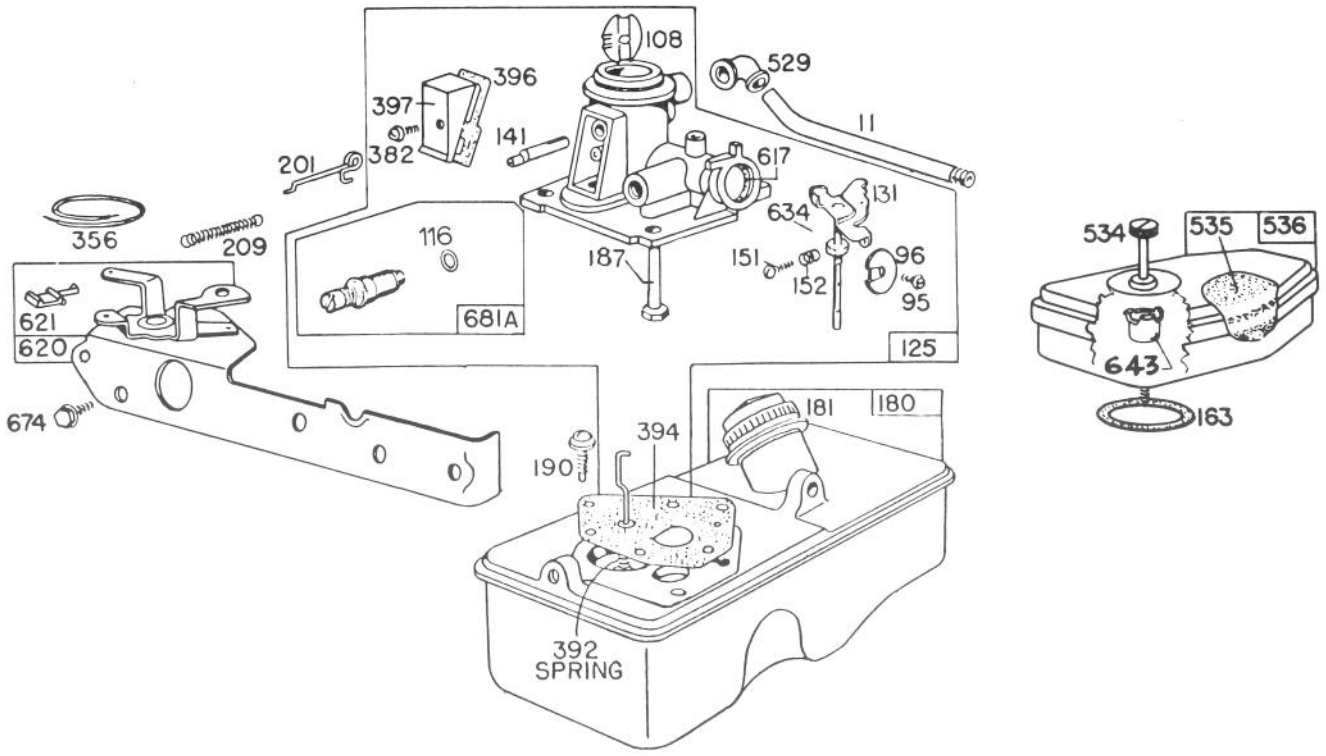

CARBURETOR ASSEMBLY MODEL 93508-0193-01

Ref. No.	Part No.	Description	No. Used
11	230802	Tube – Breather	1
95	93499	Screw – Throttle Valve Mounting	1
96	211203	Valve – Throttle	1
108	280178	Valve – Choke	1
116	280203	Seal – O-Ring	1
125	394591	Carburetor Assembly	1
131	394588	Shaft and Lever Throttle	1
141	68908	Shaft – Choke	1
151	93524	Screw – Machine Rd. Hd.	1
152	260746	Spring – Throttle Adj.	1
163	270816	Gasket – Air Cleaner Mtg.	1
180	393113	Tank Assembly – Fuel	1
181	298425	Cap – Fuel Tank	1
187	393001	Pipe – Fuel	1
190	93440	Screw – Fuel Tank Mounting	1
201	260878	Link – Governor	1
209	260875	Spring – Governor For 3400 to 3600 RPM Top Speed Set-No Load	1

Ref. No.	Part No.	Description	No. Used
356	298479	Wire – Ground	1
382	93864	Screw – Choke Link Cover	1
392	261016	Spring – Diaphragm	1
394	299637	Diaphragm – Carburetor	1
396	270571	Gasket – Choke Link Cover	1
397	211678	Cover – Choke Link	1
529	67838	Grommet – Breather	1
534	93374	Screw – Air Cleaner	1
535	270579	Element – Air Cleaner	1
536	390055	Cleaner Assembly – Air	1
617	270344	Seal – Intake Tube	1
620	299974	Plate – Carburetor Control	1
621	297472	Switch – Stop	1
634	270167	Washer – Throttle Shaft (Felt)	1
643	221321	Cup – Air Cleaner	1
674	93158	Screw – Tank to Bracket	1
681A	393451	Needle Valve Kit	1

ENGINE BRIGGS & STRATTON MODEL 93508-0193-01
ENGINE BRIGGS & STRATTON MODEL 92908-2052-01

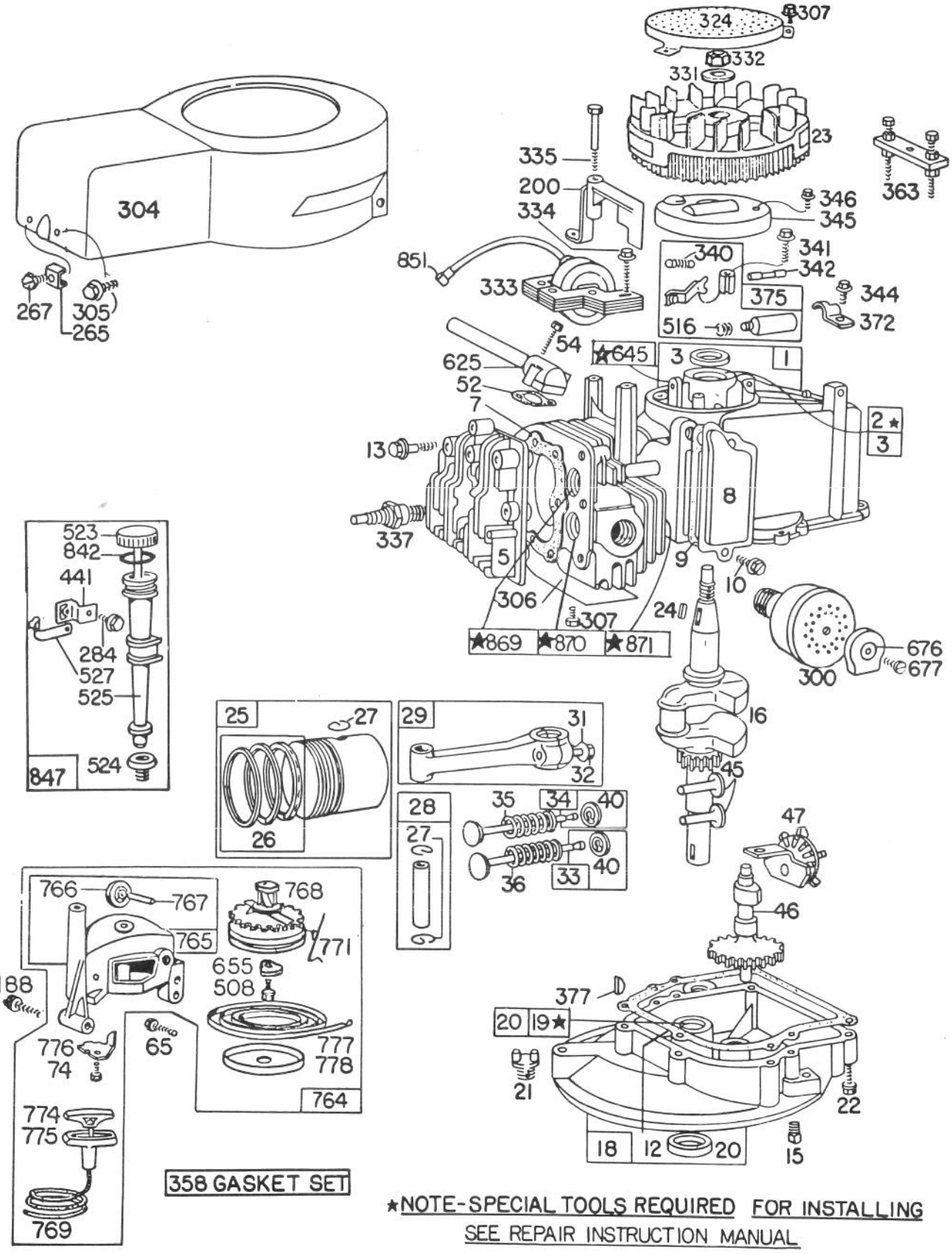

358 GASKET SET

★NOTE-SPECIAL TOOLS REQUIRED FOR INSTALLING
SEE REPAIR INSTRUCTION MANUAL

ENGINE BRIGGS & STRATTON MODEL 93508-0193-01
ENGINE BRIGGS & STRATTON MODEL 92908-2052-01

Ref. No.	Part No.	Description	No. Used
1	298988	Cylinder Assembly	1
2	293708	Bushing – Cylinder **Note:** Requires special tools for installation.	1
3	299819	Seal – Oil	1
5	211479	Head – Cylinder	1
7	*270341	Gasket – Cylinder Head	1
8	298383	Breather – Valve Chamber	1
9	*270239	Gasket – Valve Cover	1
10	93394	Screw – Breather	1
12	*270833	Gasket – Crankcase – .015" thick (Standard)	1
	*270895	Gasket – Crankcase – .005" thick	1
	*270896	Gasket – Crankcase – .009" thick	1
13	93111	Screw – Cylinder Head (1-15/16" long)	1
15	91084	Plug – Oil Drain (Square Head)	1
16	261293	Crankshaft	1
18	390810	Sump – Oil	1
19	293709	Bushing – Oil Sump **Note:** Requires special tools for installation.	1
20	291841	Seal – Oil	1
21	66768	Plug – Oil Filler (Used on Type -01 only)	1
22	93032	Screw – Sump Mtg.	1
23	299982	Flywheel – Magneto	1
24	61760	Key – Flywheel	1
25	298904	Piston Assy. – Standard	1
	298905	Piston Assy. – .010" O.S.	1
	298906	Piston Assy. – .020" O.S.	1
	298907	Piston Assy. – .030" O.S.	1
		PISTON RING SETS **Note:** For Chrome Piston Ring Set – standard size – order Part No. 299742	1
26	298982	Ring Set – Standard Piston	1
	298983	Ring Set – .010" O.S. Piston	1
	298984	Ring Set – .020" O.S. Piston	1
	298985	Ring Set – .030" O.S. Piston	1
27	26026	Lock – Piston Pin	1
28	298909	Pin Assy. – Piston – Standard	1
	298908	Pin Assy. – Piston – .005" O.S.	1
29	294201	Rod Assy. – Connecting **Note:** For Connecting Rod with .020" undersize Crankpin Bore – order No. 296079	1
31	220756	Lock – Conn. Rod Screw	1
32	92296	Screw – Connecting Rod	1
33	296676	Valve – Exhaust	1
34	296677	Valve – Intake	1
35	260552	Spring – Intake Valve	1
36	26478	Spring – Exhaust Valve	1
40	93312	Retainer – Valve Spring used with valves with groove in stem	1
45	230173	Tappet – Valve	1
46	210453	Gear – Cam	1
47	294652	Oil Slinger Gear and Bracket	1
52	*270345	Gasket – Intake Elbow	1
54	93485	Screw – Intake Elbow Mtg.	1
65	93587	Screw – Vertical Pull Starter Mtg.	1
74	93490	Screw	1
188	93585	Screw – Fuel Tank and Starter Mtg.	1
200	68388	Blade – Governor	1
265	22372	Clamp – Casing	1
267	93469	Screw – Clamp Mtg.	1

*Included in Gasket Set – Part No. 298989.

Ref. No.	Part No.	Description	No. Used
284	93572	Screw – Clamp Mtg.	1
300	391435	Muffler – Exhaust	1
304	299983	Housing – Blower	1
305	93559	Screw – Blower Housing Mtg.	1
306	221805	Shield – Cylinder	1
307	93490	Screw – Cylinder Shield and Rotating Screen Mtg.	1
324	222063	Screen – Rotating	1
331	220865	Washer – Flywheel	1
332	92284	Nut – Flywheel	1
333	298502	Armature – Magneto	1
334	93381	Screw – Armature Mtg.	1
335	93435	Screw – Armature and Governor Blade Mtg.	1
337	293918	Plug – Spark (with gasket) (Resistor Type) 1-1/2" high **Note:** Spark Plugs use Ignition Cable Terminal No. 221798	1
340	26018	Spring – Breaker Arm	1
341	93381	Screw – Breaker Arm Mtg.	1
342	65704	Plunger – Breaker Point	1
344	93042	Screw – Condenser Clamp Mtg.	1
345	220366	Cover – Breaker Point and Condenser	1
346	93705	Screw – Dust Cover Mtg.	1
358	298989	Gasket Set	1
363	19069	Puller – Flywheel (Optional Accessory)	1
372	220477	Clamp – Condenser	1
375	294628	Breaker Points and Condenser Set **Note: 299061** Ignition Kit Includes: **294628** Point Set, **65704** Plunger, **61760** Key – Flywheel	1
377	93065	Key – Woodruff	1
441	222530	Bracket – Oil Fill Tube	1
508	93158	Screw	1
516	260374	Spring – Connector (Condenser Post)	1
523	391838	Cap with Dipstick – Oil Filler	1
524	68838	Seal – Filler Tube	1
525	280131	Tube – Oil Filler	1
527	222548	Clamp – Oil Filler Tube	1
625	298775	Tube – Fuel Intake	1
645	23513	Bushing – Plunger	1
655	222057	Anchor – Spring	1
676	222522	Deflector – Muffler	1
677	93705	Screw – Muffler Deflector	1
764	392064	Starter Assy. – Vertical Pull	1
765	392138	Housing – Vertical Pull Starter	1
766	280022	Pulley – Rope (small)	1
767	231048	Pin – Small Rope Pulley (7/16" long)	1
768	299948	Pulley and Gear Assy. – Starter	1
769	66734	Rope – Vertical Pull Starter	1
771	299961	Clip – Vertical Pull Starter	1
774	280121	Insert – Starter Handle	1
775	280036	Grip – Starter Rope	1
776	222049	Guide – Rope	1
777	390066	Spring – Vertical Pull Starter	1
778	280021	Cover – Vertical Pull Starter Pulley	1
842	270920	Seal – Oil Filler Cap	1
847	392055	Tube Assy. – Oil Fill (Used on Type -02 only)	1
851	221798	Terminal – Ignition Cable	1
869	210879	Seat – Intake Valve (Standard)	1
870	211291	Seat – Exhaust Valve (Standard)	1
871	63709	Guide – Exhaust Valve	1

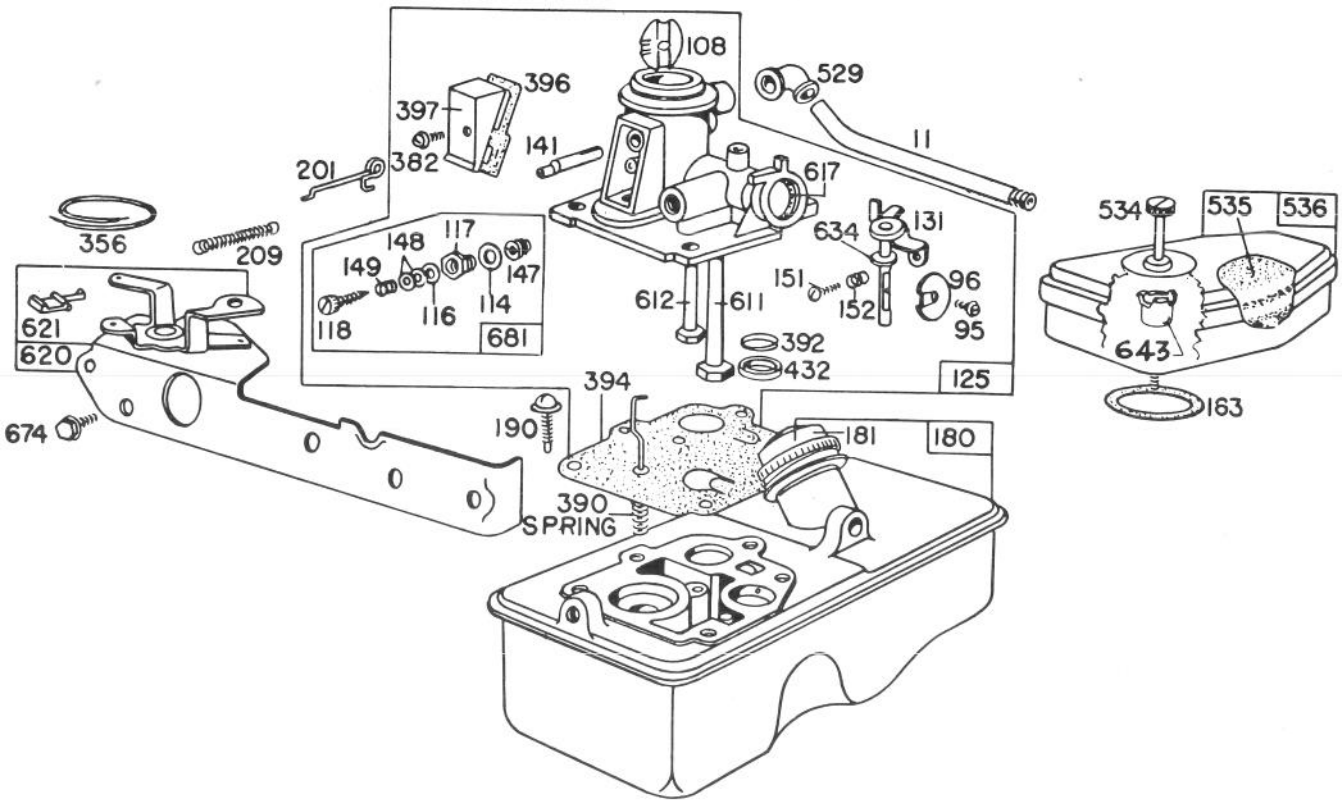

ENGINE BRIGGS & STRATTON MODEL 92908-2052-01

Ref. No.	Part No.	Description	No. Used
11	230802	Tube – Breather	1
95	93499	Screw – Throttle Valve Mtg.	1
96	211237	Valve – Throttle	1
108	298819	Valve – Choke	1
114	66594	Gasket – Needle Valve Nut	1
116	65978	Packing – Needle Valve	1
117	230590	Nut – Needle Valve	1
118	23433	Valve – Needle	1
125	390065	Carburetor Assembly	1
131	299977	Shaft and Lever – Throttle	1
141	68908	Shaft – Choke	1
147	230591	Seat – Needle Valve	1
148	22235	Washer – Needle Valve	2
149	26336	Spring – Needle Valve	1
151	93524	Screw – Rd. Hd.	1
152	260746	Spring – Throttle Adj.	1
163	270816	Gasket – Air Cleaner Mtg.	1
180	391694	Tank Assy. – Fuel used on type Nos. 0500 and up	1
181	298425	Cap – Fuel Tank	1
190	93440	Screw – Fuel Tank Mtg.	1
201	261027	Link – Governor	1

Ref. No.	Part No.	Description	No. Used
209	261419	Spring – Governor	1
356	298479	Wire – Ground	1
382	93545	Screw – Choke Link Cover	1
390	261015	Spring – Diaphragm	1
392	260455	Spring – Fuel Pump Diaphragm	1
394	391681	Diaphragm – Carburetor	1
396	270571	Gasket – Choke Link Cover	1
397	211678	Cover – Choke Link	1
432	221377	Cap – Spring	1
529	67838	Grommet – Breather	1
534	93374	Screw – Air Cleaner	1
535	270579	Element – Air Cleaner	1
536	390055	Cleaner Assembly – Air	1
611	297219	Pipe – Fuel (long)	1
612	296811	Pipe – Fuel (short)	1
617	270344	Seal – Fuel Intake Tube	1
620	299974	Plate – Carburetor Control	1
621	297472	Switch – Stop	1
634	270167	Washer – Throttle Shaft (Felt)	1
643	221321	Cup – Air Cleaner	1
674	93447	Screw – Tank to Bracket	1
681	299060	Needle Valve Kit	1

Litho in U.S.A.