Form No. 3468-121 Rev A

TORO®

Count on it.

Parts Catalog

# Greensmaster® Flex™ 1018

## Traction Unit

**Model No. 04850—Serial No. 416648309 and Up**

Register at www.Toro.com.
Original Instructions (EN)

CE

*3468-121* A

# Ordering Replacement Parts

To order replacement parts, please supply the part number, the quantity, and the description of each part desired.

### Understanding Reference Numbers

Each identified part in an illustration has a reference number. The reference number for a part also appears in the parts list, along with other information about the part.

This catalog uses two special reference number formats, one to indicate parts in a service assembly and another to indicate the quantity of a given part in an illustration.

### Service Assembly Reference Numbers

Parts in service assemblies have reference numbers in the form a:b. The a represents the reference number of the entire service assembly and the b represents a sequential number unique to each part within the service assembly.

For example, a wheel assembly might be identified by reference number 6, the tire by 6:1, the valve by 6:2, and the wheel by 6:3. When you order the assembly identified by reference number 6, you receive all parts identified by reference numbers 6:1,6:2, and 6:3. However, you may also order any part individually. Reference numbers of this type appear in illustration and in parts lists.

### Reference Numbers Indicating Quantity

In an illustration, if a reference number indicates more than one part, the reference number has the form nX y. The n represents the quantity of the part, the X is the multiplication symbol, and the y represents the reference number.

For example, in an illustration, the reference number 2X 37 means that two of the parts identified by reference number 37 are indicated.

# Contents

Frame and Handle Mount Assembly . . . . . 4
Drum Drive Assembly . . . . . 5
Drum Drive Replacement Kit Assembly No. 147-2345 . . . . . 6
Drum Drive Gear Box Assembly . . . . . 7
Transmission Assembly . . . . . 8
Transmission Replacement Kit Assembly No. 140-9324 . . . . . 9
Transmission Gearbox Assembly No. 140-9324 Transmission Case Assembly . . . . . 10
Transmission Gearbox Assembly No. 140-9324 Reel Drive Assembly . . . . . 11
Transmission Gearbox Assembly No. 140-9324 Traction Drive Assembly . . . . . 12
Differential Assembly No. 132-4555 . . . . . 13
Engine Assembly . . . . . 14
Engine Assembly No. 147-2328 . . . . . 15
Frame Assembly . . . . . 16
Grass Basket Assembly No. 121-4710 . . . . . 17
Basket Assembly No. 130-6750 . . . . . 18
Reel Controls and Covers Assembly . . . . . 19
Upper Receiver Assembly No. 147-2288 . . . . . 20
Upper Handle Assembly . . . . . 21
Traction Bail Assembly . . . . . 22
Miscellaneous Parts Assembly . . . . . 23
Attachments and Accessories . . . . . 24

**© 2024—The Toro® Company**
**8111 Lyndale Avenue South**
**Bloomington, MN 55420**



**Contact us at www.Toro.com.**
**Printed in the USA.**
**All Rights Reserved**

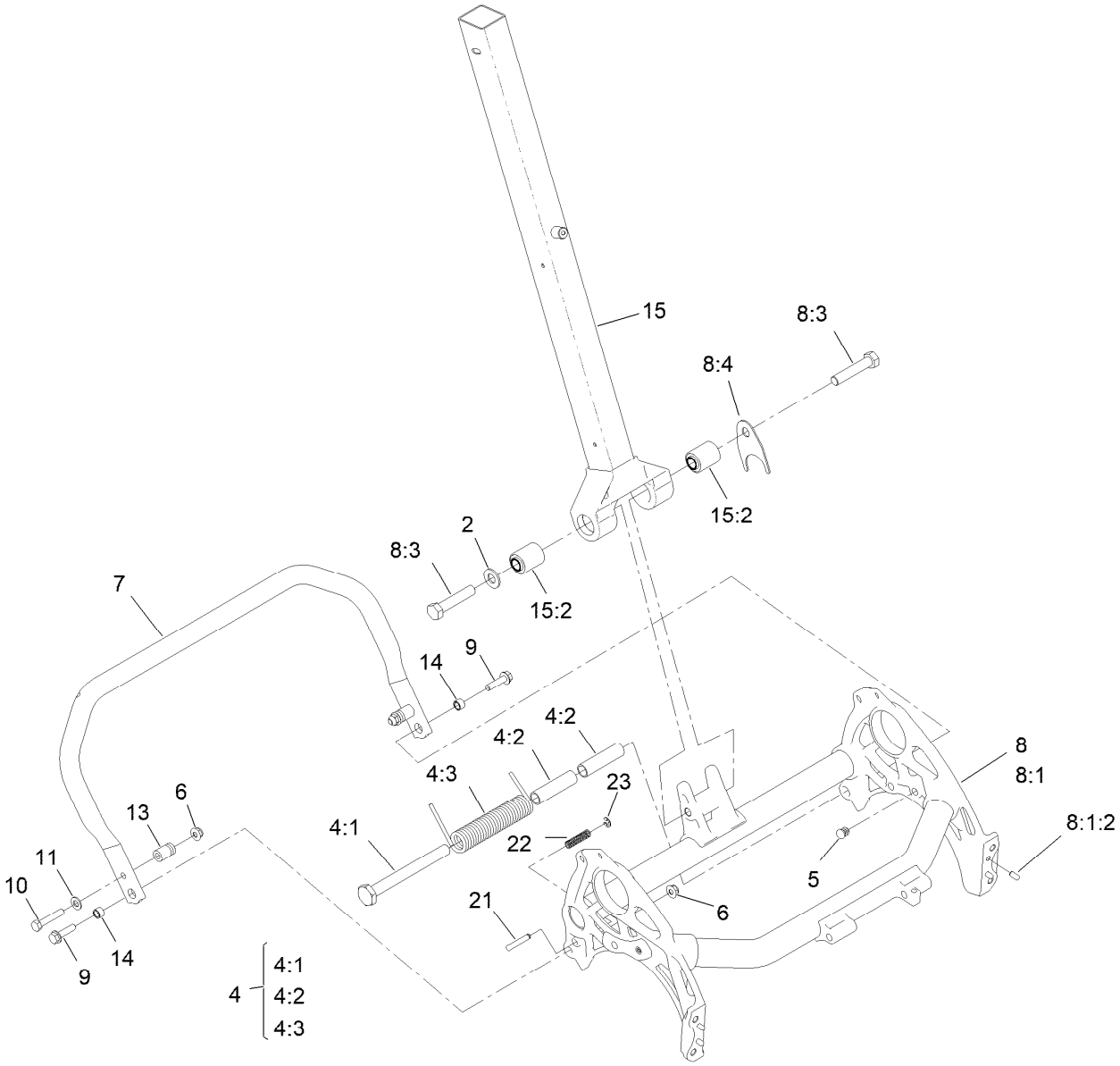


# Frame and Handle Mount Assembly

| Ref. | Part Number | Qty. | Description |
|---|---|---|---|
| 2 | 3256-26 | 1 | Washer-Flat |
| 4 | 147-2290 | 1 | Kit-Kickstand Spring Replacement |
| 4:1 | 147-2285 | 1 | Pin-Mount, Spring |
| 4:2 | 147-2286 | 2 | Sleeve, Spring-Mount |
| 4:3 | 147-2268 | 1 | Spring-Torsion, LH |
| 5 | 139-4326 | 2 | Plug-Plastic |
| 6 | 119-4041 | 3 | Nut-HF |
| 7 | 147-2273 | 1 | Kickstand, 18 Inch |
| 8 | 140-9347 | 1 | Frame ASM, 18" |
| 8:1 | | 1 | Frame ASM, 18" ● |
| 8:1:2 | 95-0715 | 4 | Pin-Dowel |

| Ref. | Part Number | Qty. | Description |
|---|---|---|---|
| 8:3 | 325-10 | 2 | Screw-HH |
| 8:4 | 140-9333 | 1 | Washer, Anti-Rotation |
| 9 | 112-6913 | 2 | Screw-HF |
| 10 | 322-9 | 2 | Screw-HH |
| 11 | 3256-23 | 2 | Washer-Plain |
| 13 | 65-7900 | 2 | Retainer-Spring |
| 14 | 65-7910 | 2 | Spacer |
| 15 | 137-0292 | 1 | Lower Handle ASM |
| 15:2 | 138-1469 | 2 | Bushing-Straight |
| 21 | 139-7431 | 1 | Pin-Kickstand, Lock |
| 22 | 73-3450 | 1 | Spring-Compression |
| 23 | 32151-86 | 1 | E-Ring |

● Not serviced separately

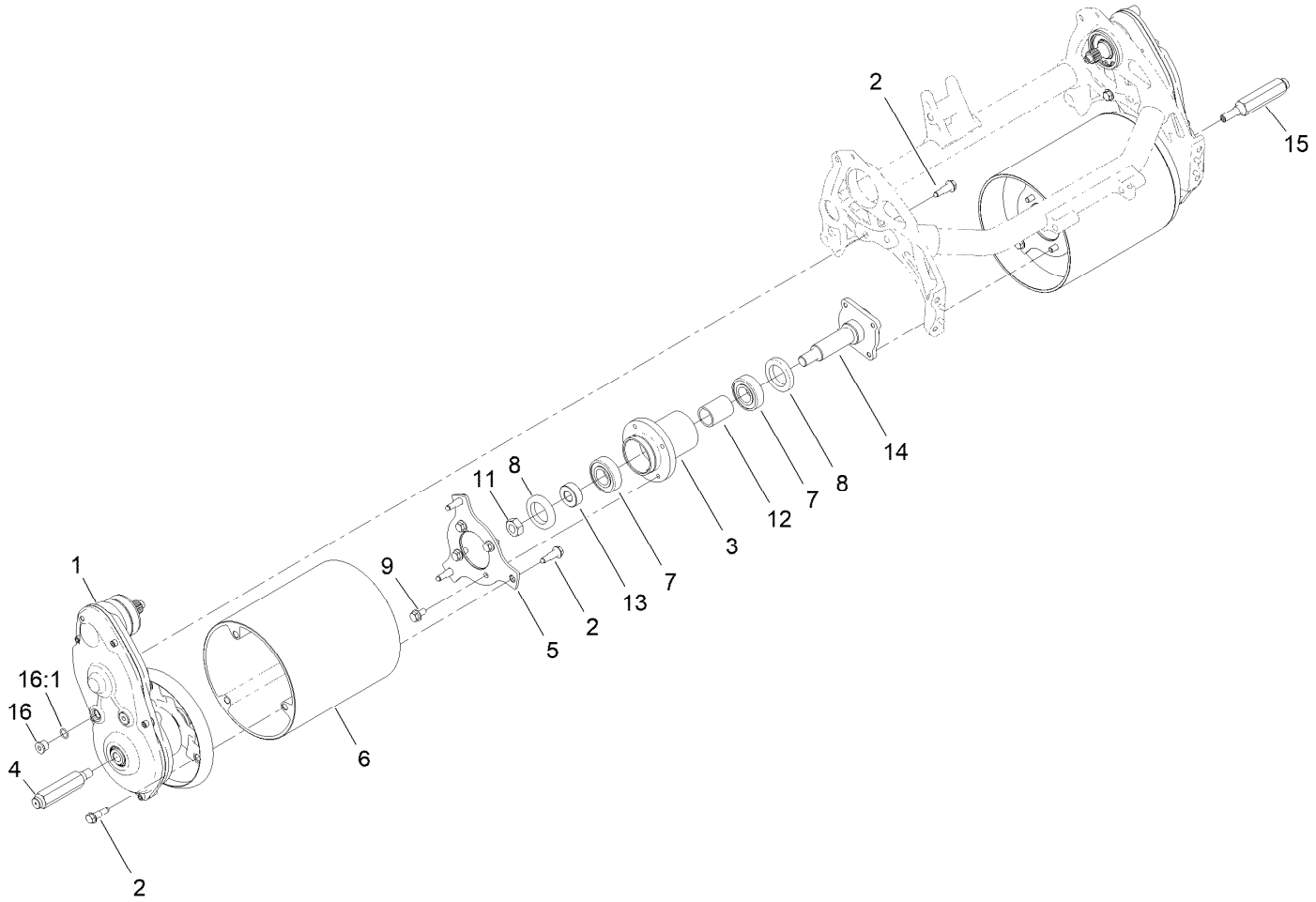


# Drum Drive Assembly

| Ref. | Part Number | Qty. | Description |
|---|---|---|---|
| 1 | 147-2345 | 1 | Kit-Drum Drive Replacement |
| 2 | 132-4607 | 14 | Bolt-Shoulder, Flange |
| 3 | 132-6971 | 1 | Hub-Drum |
| 4 | 132-4605 | 1 | Shaft-Hex, RH |
| 5 | 147-2257 | 2 | Plate-Drum, Hub |
| 6 | 139-4364 | 2 | Drum-Traction, Flex |
| 7 | 251-82 | 2 | Bearing-Ball |
| 8 | 253-159 | 2 | Seal |
| 9 | 114-7728 | 8 | Screw-HF |
| 11 | 3296-33 | 1 | Nut-Lock, NI |
| 12 | 65-6520 | 1 | Spacer |
| 13 | 65-6530 | 1 | Spacer |
| 14 | 94-5850 | 1 | Spindle-Drum |
| 15 | 132-4606 | 1 | Shaft-Hex, LH |
| 16 | 353-989 | 4 | Plug-Hex, Hollow |
| 16:1 | 237-42 | 1 | O-Ring |

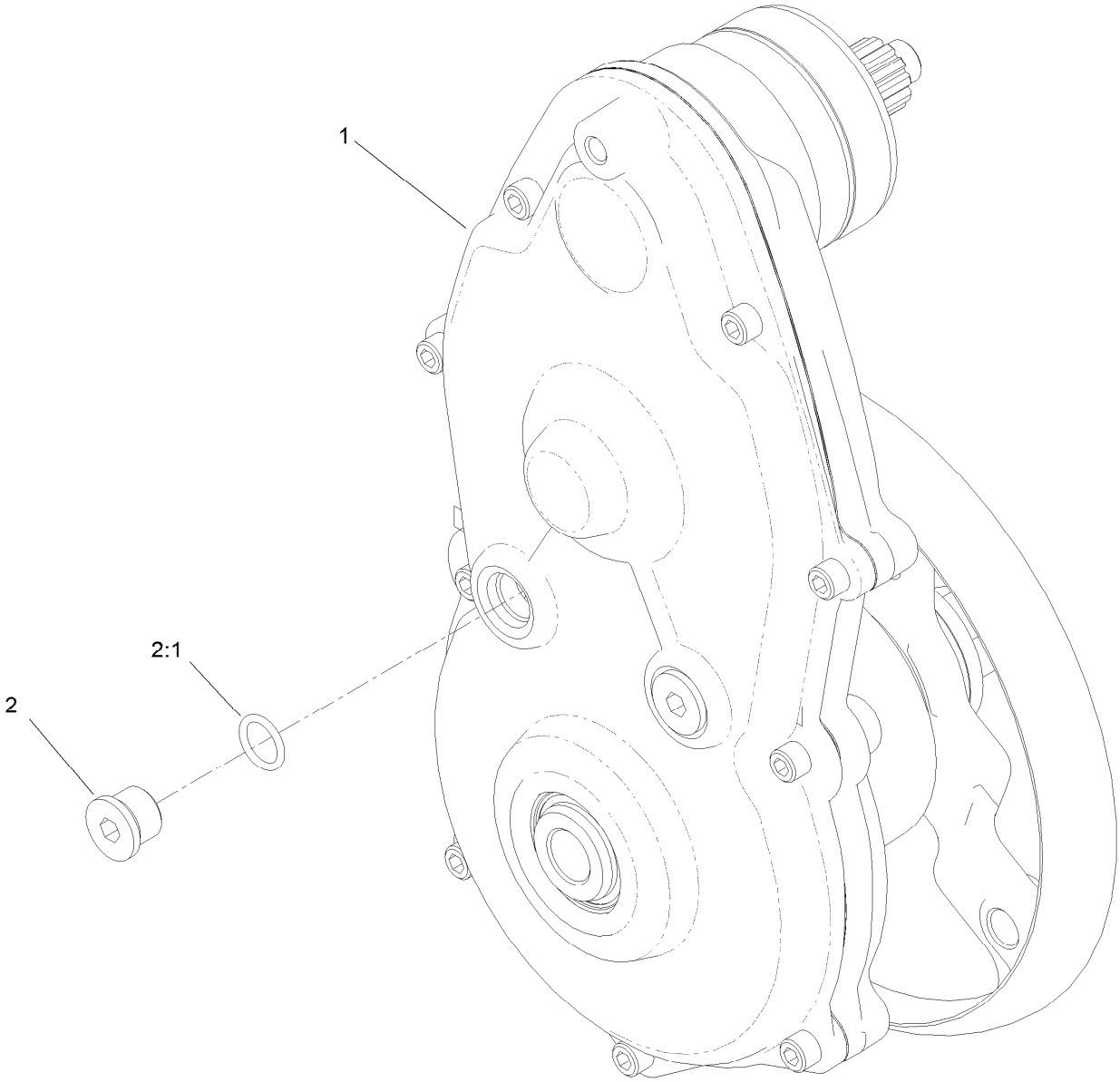


# Drum Drive Replacement Kit Assembly No. 147-2345

| *Ref.* | *Part Number* | *Qty.* | *Description* |
|---|---|---|---|
| 1 | | 1 | Drum Drive Gear Box ASM ● |
| 2 | 353-989 | 2 | Plug-Hex, Hollow |
| 2:1 | 237-42 | 1 | O-Ring |

● Not serviced separately

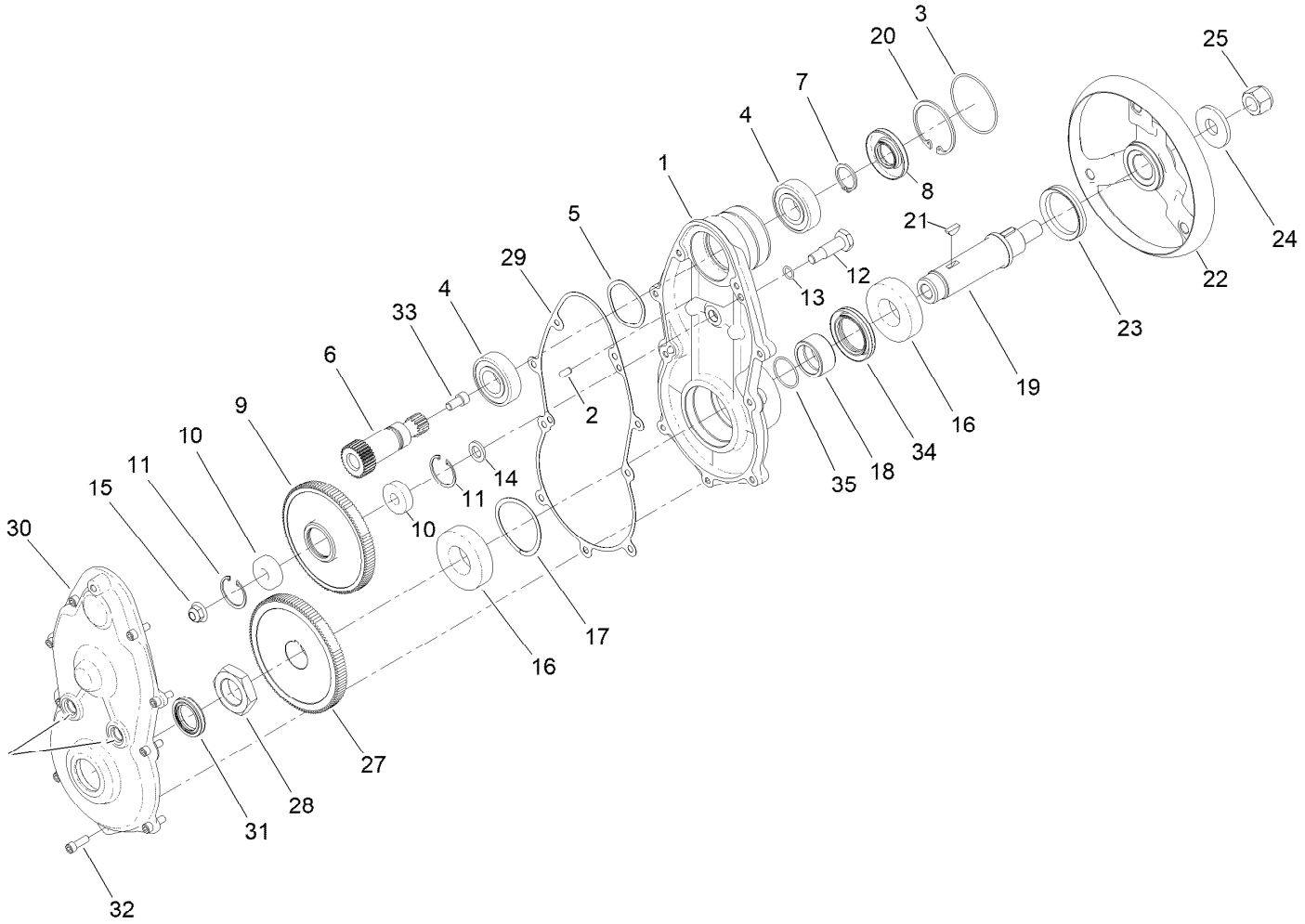


# Drum Drive Gear Box Assembly

| Ref. | Part Number | Qty. | Description |
|---|---|---|---|
| 1 | 147-2321 | 1 | Housing-Drive, Drum |
| 2 | 133-4591 | 2 | Pin-Dowel |
| 3 | 133-9082 | 1 | O-Ring |
| 4 | 251-82 | 2 | Bearing-Ball |
| 5 | 3290-485 | 1 | Washer-Wave |
| 6 | 132-4565 | 1 | Gear-Spur, 30T |
| 7 | 138-1507 | 1 | Ring-Retaining, EXT (25MM) |
| 8 | 138-1491 | 1 | Seal-Oil |
| 9 | 137-0274 | 1 | Gear-Spur, 108T |
| 10 | 49-2410 | 2 | Bearing-Ball |
| 11 | 138-1506 | 2 | Ring-Retaining, Int (32MM) |
| 12 | 133-4558 | 1 | Pin-Bearing, Short |
| 13 | 80-8460 | 1 | O-Ring |
| 14 | 133-4553 | 1 | Spacer-Bearing |
| 15 | 119-4042 | 1 | Nut-HF, NI |
| 16 | 251-312 | 2 | Bearing-Ball |
| 17 | 115-5258 | 1 | Spring-Wire, Flat |

| Ref. | Part Number | Qty. | Description |
|---|---|---|---|
| 18 | 147-2348 | 1 | Spacer |
| 19 | 133-4562 | 1 | Shaft-Drum, Drive |
| 20 | 138-1480 | 1 | Ring-Retaining, Int (52MM) |
| 21 | 138-1504 | 2 | Key-Woodruff, 5MM |
| 22 | 133-9244 | 1 | Hub-Drum, Outer |
| 23 | 253-161 | 1 | Seal-V-Ring |
| 24 | 104-9216 | 1 | Washer-Hardened |
| 25 | 126-3841 | 1 | Nut-Hex, NI |
| 27 | 147-2349 | 1 | Gear-Spur, 114T |
| 28 | 133-9078 | 1 | Nut-Hex |
| 29 | 147-2324 | 1 | Gasket-Drum Drive |
| 30 | 147-2323 | 1 | Cover-Drive, Drum |
| 31 | 133-4559 | 1 | Seal-Oil |
| 32 | 140-9233 | 9 | Screw-HSH |
| 33 | 3274-12 | 1 | Screw-HSH |
| 34 | 147-2346 | 1 | Seal-Oil |
| 35 | 147-2347 | 1 | O-Ring |

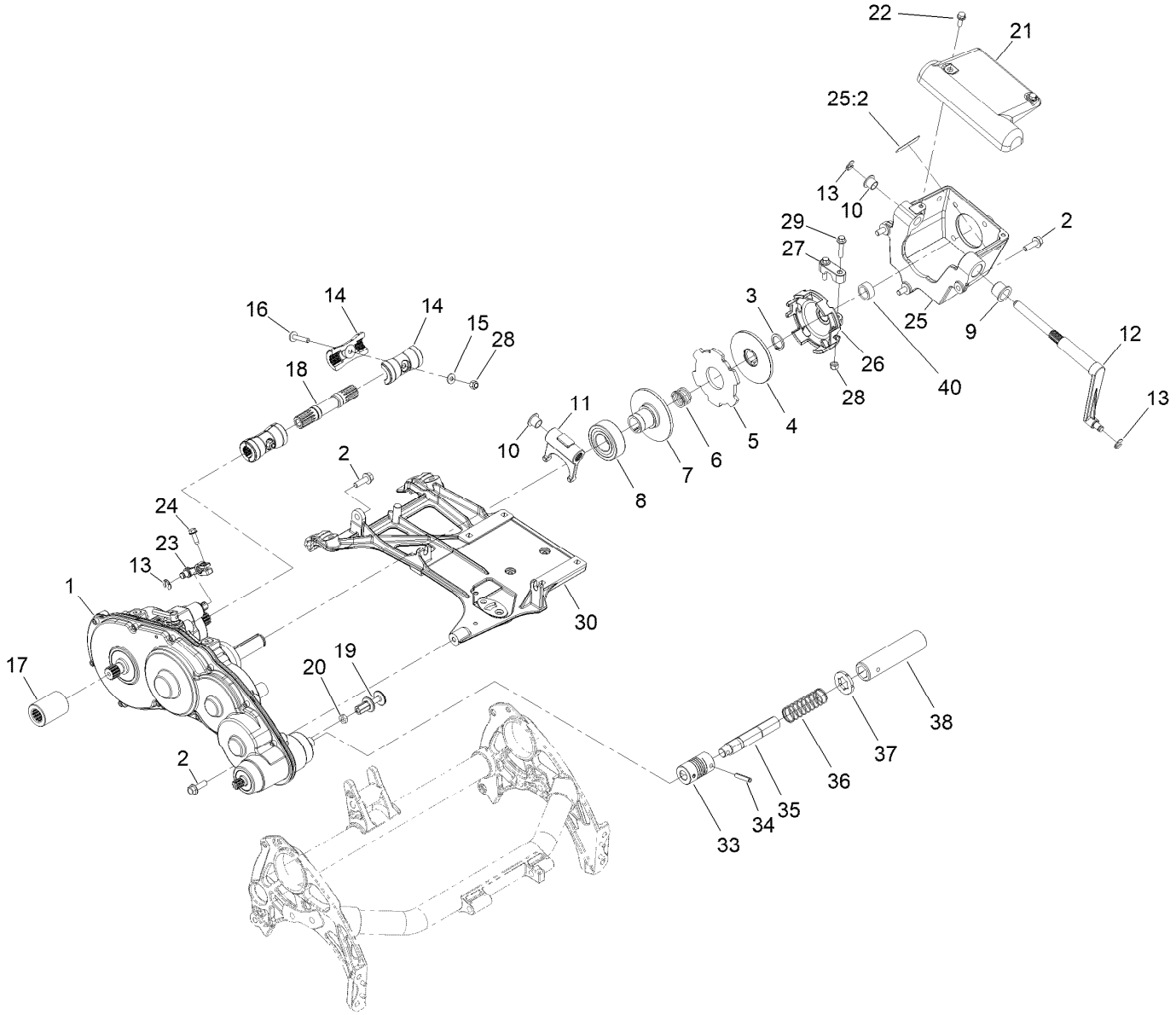


# Transmission Assembly

| Ref. | Part Number | Qty. | Description |
|---|---|---|---|
| 1 | 140-9324 | 1 | Kit-Transmission Replacement |
| 2 | 115-5142 | 5 | Screw-HHF |
| 3 | 32151-33 | 1 | Ring-Retaining, EXT |
| 4 | 133-9095 | 1 | Disc-Clutch |
| 5 | 133-9094 | 1 | Plate-Friction |
| 6 | 133-9123 | 1 | Spring-Compression, Clutch |
| 7 | 138-1508 | 1 | Disc-Clutch, Slider |
| 8 | 138-1505 | 1 | Bearing-Sealed, Self Aligning |
| 9 | 132-4089 | 1 | Bushing |
| 10 | 125-5239 | 2 | Bushing-Flange |
| 11 | 138-3548 | 1 | Fork-Clutch |
| 12 | 138-3549 | 1 | Shaft-Fork |
| 13 | 32151-47 | 3 | Ring-Retaining |
| 14 | 133-9100 | 4 | Coupler-Splined, 4 Tooth |
| 15 | 119-8952 | 2 | Washer |
| 16 | 126-8232 | 2 | Screw-Truss Hex Skt |
| 17 | 138-1615 | 1 | Tube-Drive |
| 18 | 139-4327 | 1 | Shaft-Drive, 18 Inch |
| 19 | 133-9207 | 1 | Adapter-Slider |
| 20 | 120-9638 | 1 | Nut-Jam |
| 21 | 138-5545 | 1 | Cover-Clutch |
| 22 | 119-1138 | 2 | Screw-HHF |
| 23 | 133-9117 | 1 | Lever-Brake, Cable |
| 24 | 131-6150 | 1 | Screw-HWHTF |
| 25 | 139-4301 | 1 | Bell Housing ASM |
| 25:2 | 120-9570 | 1 | Decal-Warning |
| 26 | 138-3542 | 1 | Hub-Clutch, External |
| 27 | 138-5522 | 1 | Clamp-Hub, Clutch |
| 28 | 3296-42 | 4 | Nut-Lock, NI |
| 29 | 127-8639 | 2 | Screw-HHF |
| 30 | 138-5517 | 1 | Base-Engine |
| 33 | 133-2341 | 1 | Coupling-Helical |
| 34 | 125-3542 | 2 | Pin-Roll |
| 35 | 139-7399 | 1 | Shaft-Coupler |
| 36 | 140-3407 | 1 | Spring-Compression, Coupler |
| 37 | 139-7391 | 1 | Collar-Lock |
| 38 | 110-2390 | 1 | Tube-Hex |
| 40 | 147-2265 | 1 | Spacer-Clutch |

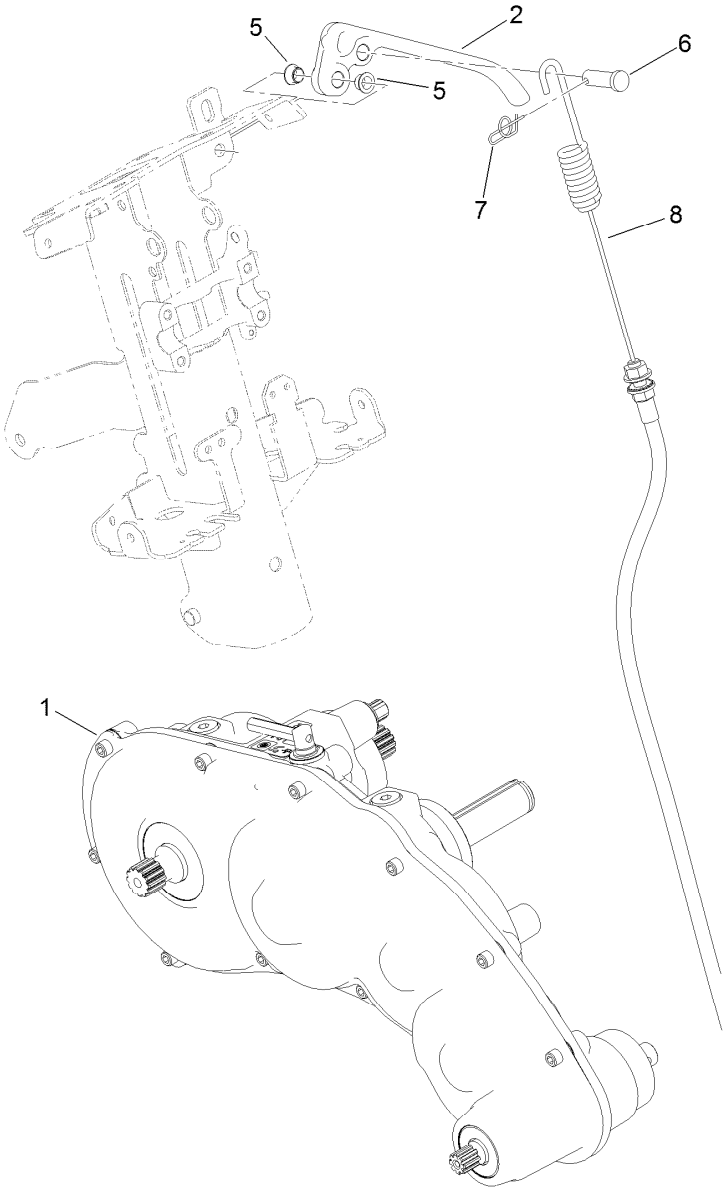


# Transmission Replacement Kit Assembly No. 140-9324

| *Ref.* | *Part Number* | *Qty.* | *Description* |
|---|---|---|---|
| 1 | 130-6820 | 1 | Transmission Gear Box ASM |
| 2 | 140-9298 | 1 | Lever-Brake |
| 5 | 138-5538 | 2 | Bushing-Flange |
| 6 | 1-808285 | 1 | Pin-Clevis |
| 7 | 140-9312 | 1 | Pin-Cotter, Locking |
| 8 | 140-9318 | 1 | Cable ASM, Brake |

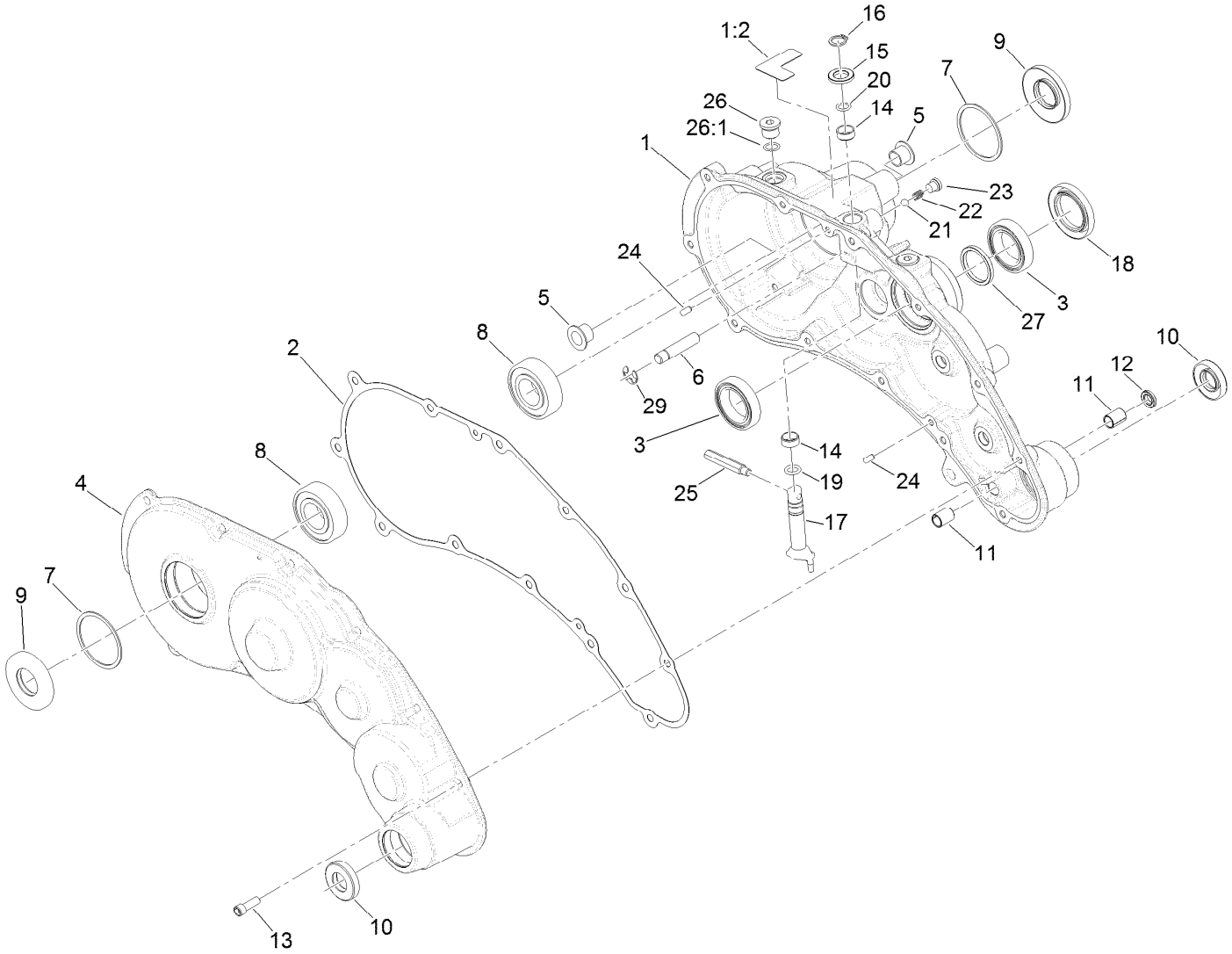


# Transmission Gearbox Assembly No. 140-9324
# Transmission Case Assembly

| Ref. | Part Number | Qty. | Description |
|---|---|---|---|
| 1 | 139-4306 | 1 | Transmission Housing ASM |
| 1:2 | 138-1644 | 1 | Decal-Release, Traction |
| 2 | 132-4551 | 1 | Gasket-Transmission |
| 3 | 121-9281 | 2 | Bearing-Ball |
| 4 | 138-1603 | 1 | Transmission Cover ASM |
| 5 | 125-5239 | 2 | Bushing-Flange |
| 6 | 133-9122 | 1 | Pin-Mount, Brake |
| 7 | 32151-92 | 2 | Ring-Retaining |
| 8 | 251-82 | 2 | Bearing-Ball |
| 9 | 133-9075 | 2 | Seal-Oil |
| 10 | 130-9463 | 2 | Seal-Oil |
| 11 | 131-3038 | 2 | Bushing-Sleeve |
| 12 | 131-3126 | 1 | Seal-Oil |
| 13 | 140-9233 | 12 | Screw-HSH |
| 14 | 121-4738 | 2 | Bushing-Straight |

| Ref. | Part Number | Qty. | Description |
|---|---|---|---|
| 15 | 108-5059 | 1 | Spacer-Bushing |
| 16 | 32151-61 | 1 | Ring-Retaining |
| 17 | 130-6816 | 1 | Shaft-Selector, Traction |
| 18 | 140-9325 | 1 | Seal-Grease, High Temp |
| 19 | 131-1879 | 1 | O-Ring Seal |
| 20 | 237-22 | 1 | O-Ring |
| 21 | 105-2442 | 1 | Ball-Detent |
| 22 | 105-2443 | 1 | Spring-Detent |
| 23 | 131-1825 | 2 | Plug-ORB |
| 24 | 121-9249 | 2 | Pin-Dowel |
| 25 | 133-9149 | 1 | Pin-Groomer |
| 26 | 353-989 | 2 | Plug-Hex, Hollow |
| 26:1 | 237-42 | 1 | O-Ring |
| 27 | 138-1496 | 1 | Spacer |
| 29 | 105-7004 | 1 | E-Ring |

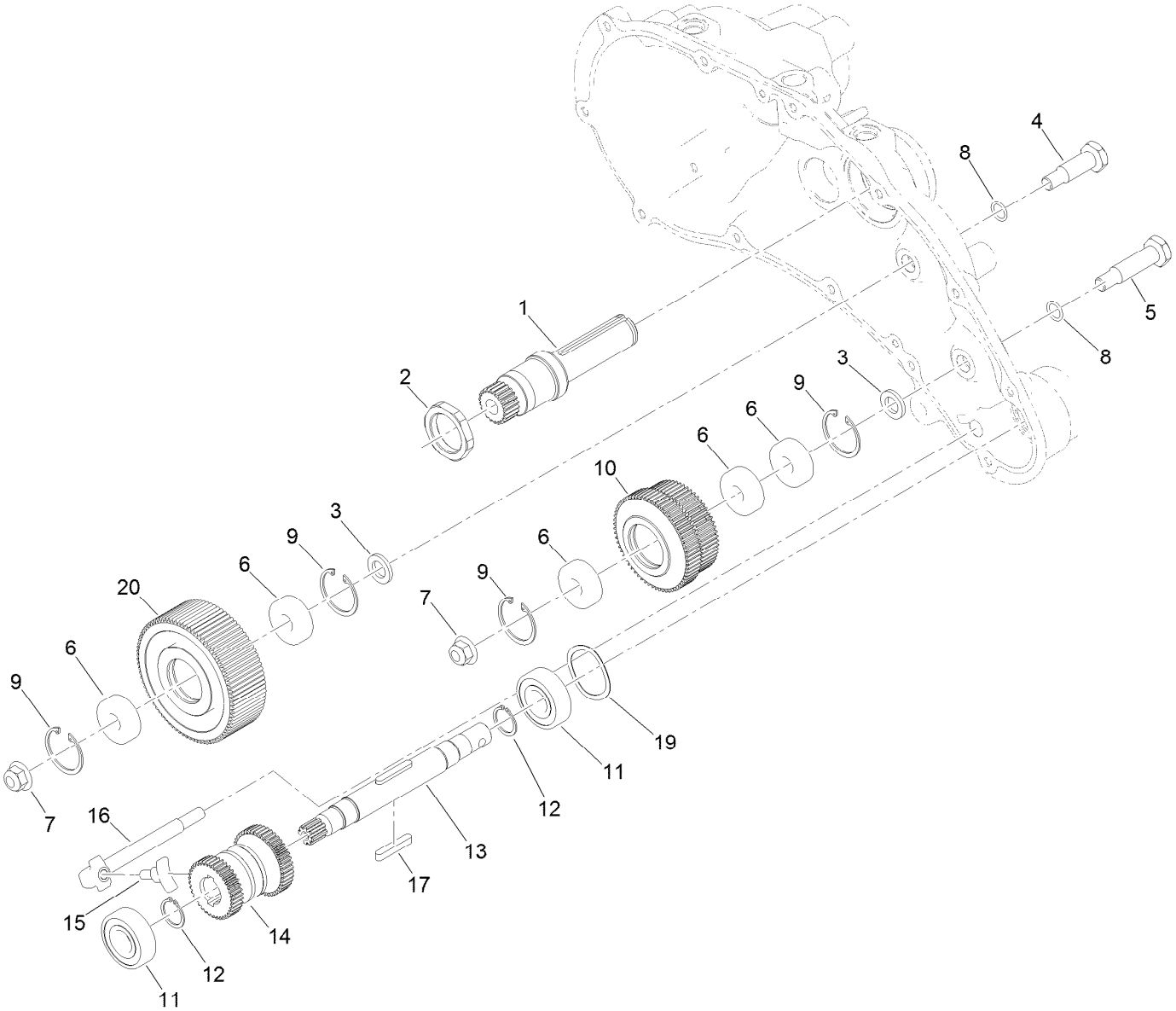


# Transmission Gearbox Assembly No. 140-9324
# Reel Drive Assembly

| Ref. | Part Number | Qty. | Description |
|---|---|---|---|
| 1 | 138-1509 | 1 | Shaft-Input, 22T |
| 2 | 138-1495 | 1 | Nut-Lock, Thin |
| 3 | 133-4553 | 2 | Spacer-Bearing |
| 4 | 133-4558 | 1 | Pin-Bearing, Short |
| 5 | 133-4557 | 1 | Pin-Bearing, Long |
| 6 | 49-2410 | 5 | Bearing-Ball |
| 7 | 104-8301 | 2 | Nut-HF, NI |
| 8 | 80-8460 | 2 | O-Ring |
| 9 | 138-1506 | 4 | Ring-Retaining, Int (32MM) |
| 10 | 137-0272 | 1 | Gear-Spur, 60T/65T |

| Ref. | Part Number | Qty. | Description |
|---|---|---|---|
| 11 | 38-7820 | 2 | Bearing-Ball |
| 12 | 138-1629 | 2 | Ring-Retaining, EXT (17MM) |
| 13 | 139-4359 | 1 | Shaft-Drive, Reel |
| 14 | 130-6834 | 1 | Gear-Spur, Slider |
| 15 | 133-9120 | 1 | Shoe-Clutch, Reel |
| 16 | 133-9121 | 1 | Actuator-Clutch, Reel |
| 17 | 103-2739 | 2 | Key |
| 19 | 131-3170 | 1 | Spring-Wave |
| 20 | 137-0273 | 1 | Gear-Spur, 85T |

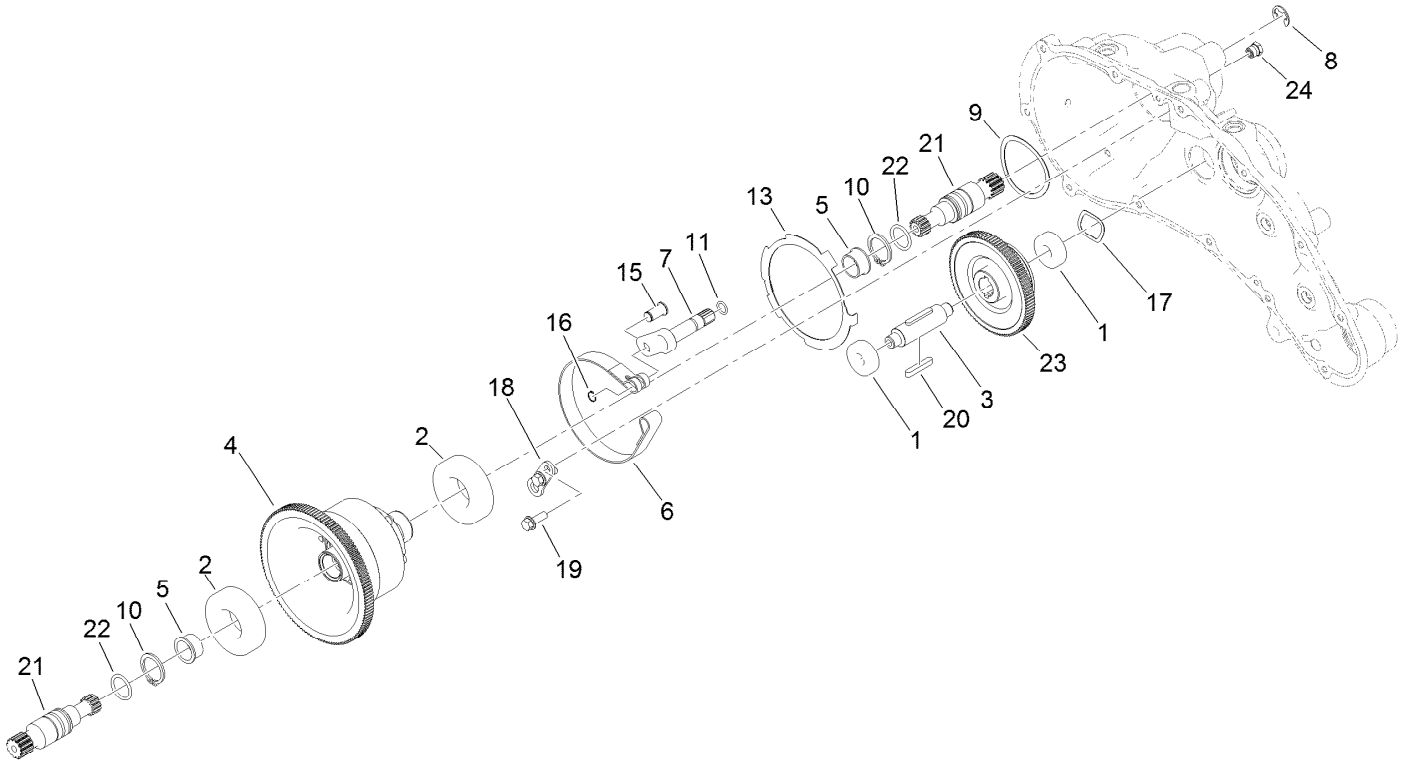


# Transmission Gearbox Assembly No. 140-9324
# Traction Drive Assembly

| Ref. | Part Number | Qty. | Description |
|---|---|---|---|
| 1 | 49-2410 | 2 | Bearing-Ball |
| 2 | 251-312 | 2 | Bearing-Ball |
| 3 | 137-0236 | 1 | Shaft-Slider, Neutral |
| 4 | 132-4555 | 1 | Differential ASM |
| 5 | 256-252 | 2 | Bearing-Flange |
| 6 | 140-9277 | 1 | Band-Brake |
| 7 | 132-4550 | 1 | Lever-Brake |
| 8 | 32120-47 | 1 | Ring-Retaining, External |
| 9 | 115-5258 | 1 | Spring-Wire, Flat |
| 10 | 32151-36 | 2 | Ring-Retaining |
| 11 | 237-22 | 1 | O-Ring |

| Ref. | Part Number | Qty. | Description |
|---|---|---|---|
| 13 | 140-9236 | 1 | Plate-Retainer, Brake |
| 15 | 120-9687 | 1 | Pin-Clevis, Brake |
| 16 | 32120-46 | 1 | Ring-Retaining |
| 17 | 112-5163 | 1 | Washer-Wave |
| 18 | 140-9279 | 1 | Plate-Retainer, Pin |
| 19 | 119-1138 | 2 | Screw-HHF |
| 20 | 103-2739 | 2 | Key |
| 21 | 130-6841 | 2 | Shaft-Differential |
| 22 | 237-159 | 2 | O-Ring |
| 23 | 137-0276 | 1 | Gear-Spur, Neutral (93T) |
| 24 | 133-4589 | 1 | Fitting-Plug |

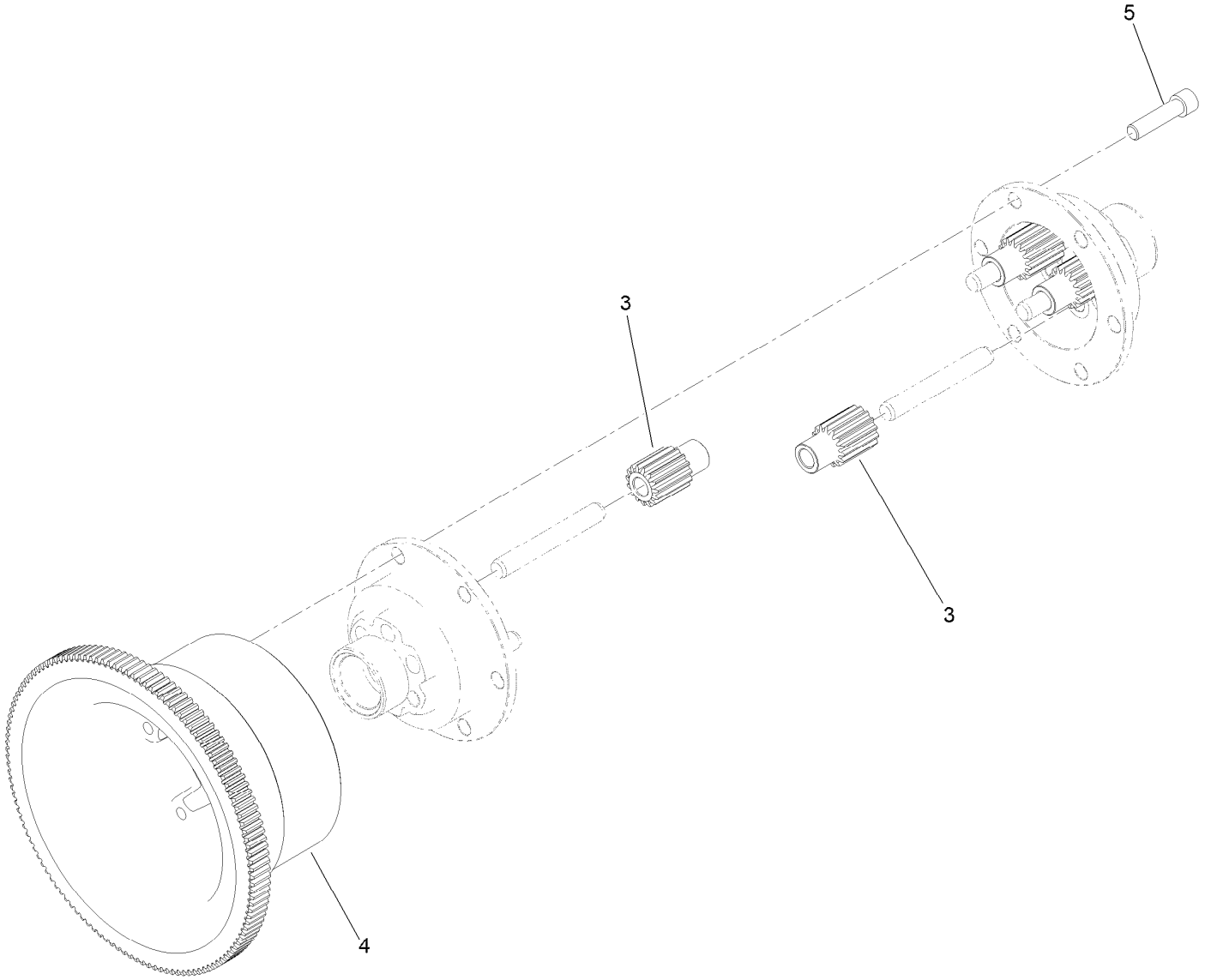


# Differential Assembly No. 132-4555

| *Ref.* | *Part Number* | *Qty.* | *Description* |
|---|---|---|---|
| 3 | 130-6840 | 6 | Gear-Spur, Differential |
| 4 | 137-0294 | 1 | Gear-Differential, 127T |
| 5 | 3274-26 | 6 | Screw-HSH |

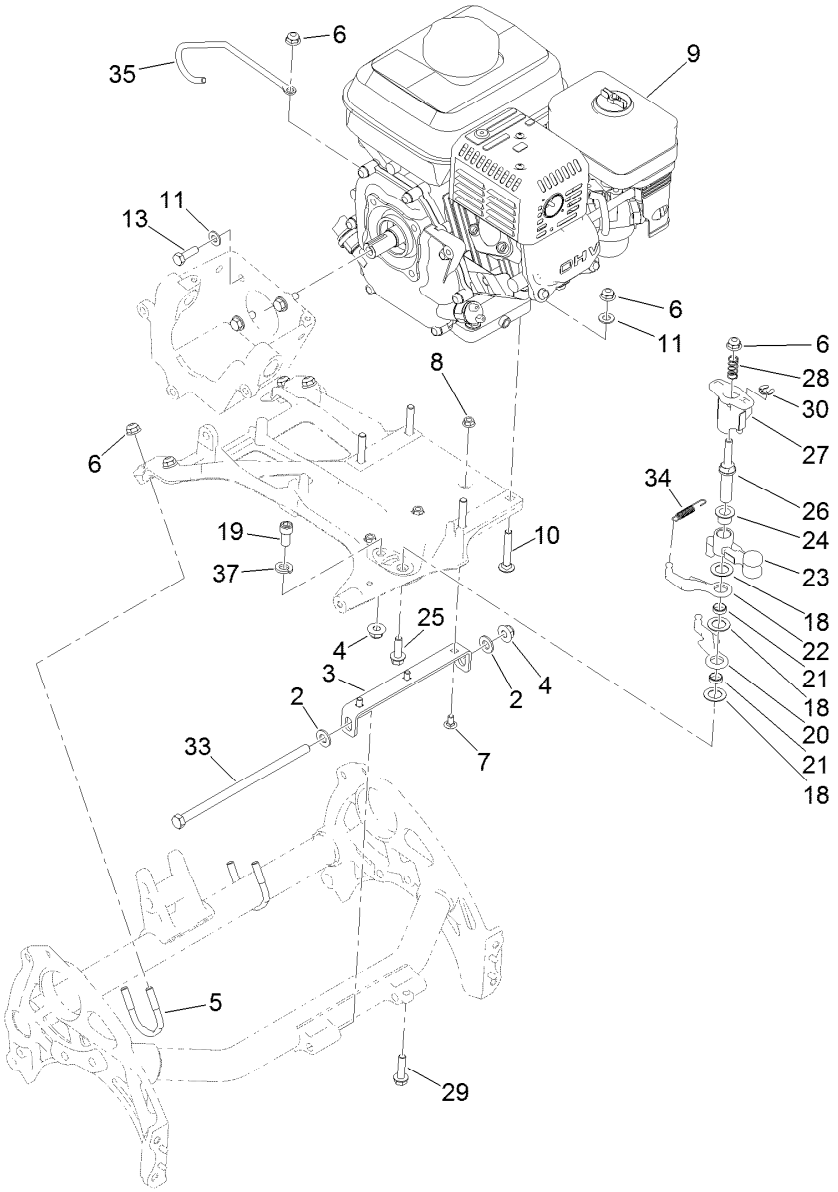


# Engine Assembly

| Ref. | Part Number | Qty. | Description |
|---|---|---|---|
| 2 | 3256-24 | 2 | Washer-Plain |
| 3 | 138-1623-01 | 1 | Bracket-Mount, Engine |
| 4 | 119-4042 | 2 | Nut-HF, NI |
| 5 | 137-0301 | 2 | Clamp-Tube |
| 6 | 119-4041 | 9 | Nut-HF |
| 7 | 116-5611 | 3 | Bolt-Carriage 1/4-20 X 1/2 Short Neck |
| 8 | 32128-10 | 3 | Nut-Lock, HHF |
| 9 | 147-2328 | 1 | Engine ASM, Honda ● |
| 10 | 3230-6 | 4 | Bolt-CARR |
| 11 | 3256-23 | 8 | Washer-Plain |
| 13 | 131-5919 | 4 | Screw-HH, Patch |
| 18 | 139-7362 | 3 | Washer-Poly |
| 19 | 131-8573 | 1 | Screw-HSH |
| 20 | 138-1523 | 1 | Reel Lever |
| 21 | 133-9226 | 2 | Bushing-Straight |
| 22 | 138-1524 | 1 | Lever-Reel |
| 23 | 133-9206 | 1 | Bellcrank-Reel |
| 24 | 125-5239 | 1 | Bushing-Flange |
| 25 | 115-5142 | 1 | Screw-HHF |
| 26 | 137-0298 | 1 | Shaft-Selector, Reel |
| 27 | 137-0299 | 1 | Hub-Selector, Reel |
| 28 | 117-1031 | 1 | Spring-Compression |
| 29 | 112-6913 | 1 | Screw-HF |
| 30 | 32151-47 | 1 | Ring-Retaining |
| 33 | 323-30 | 1 | Screw-HH |
| 34 | 119-4609 | 1 | Spring-Extension |
| 35 | 139-4309 | 1 | Guide-Cable |
| 37 | 3253-21 | 1 | Washer-Lock |

● Obtain parts from www.honda-engines.com

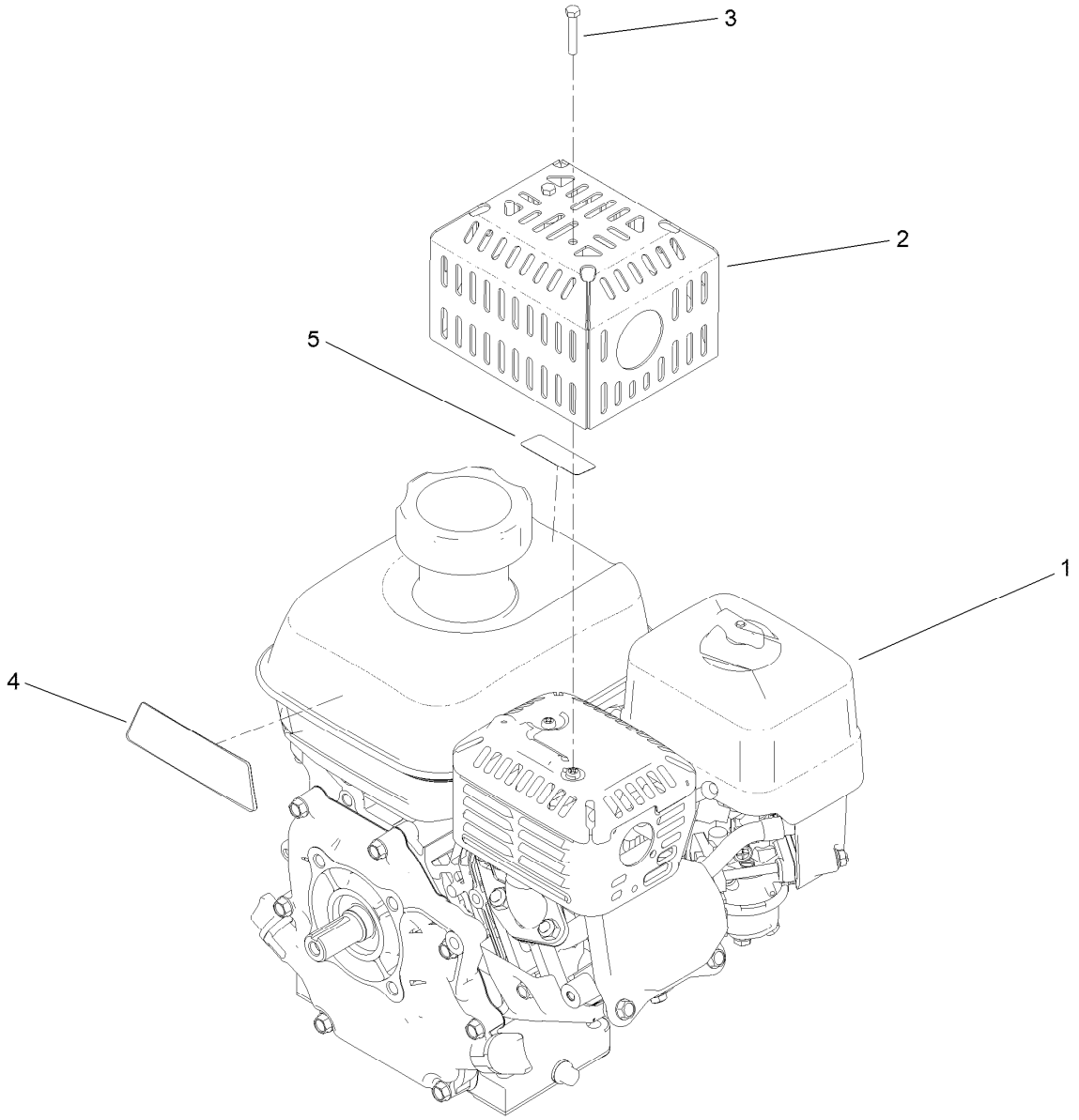


# Engine Assembly No. 147-2328

| Ref. | Part Number | Qty. | Description |
|---|---|---|---|
| 1 | | 1 | Engine ASM, Honda ●■ |
| 2 | 138-2128-03 | 1 | Guard-Muffler |
| 3 | 87-5150 | 2 | Screw-HH |
| 4 | 138-2138 | 1 | Decal-Warning, Engine |
| 5 | 130-8322 | 1 | Decal-Warning, Ethanol |

● Not serviced separately

■ Obtain parts from www.honda-engines.com

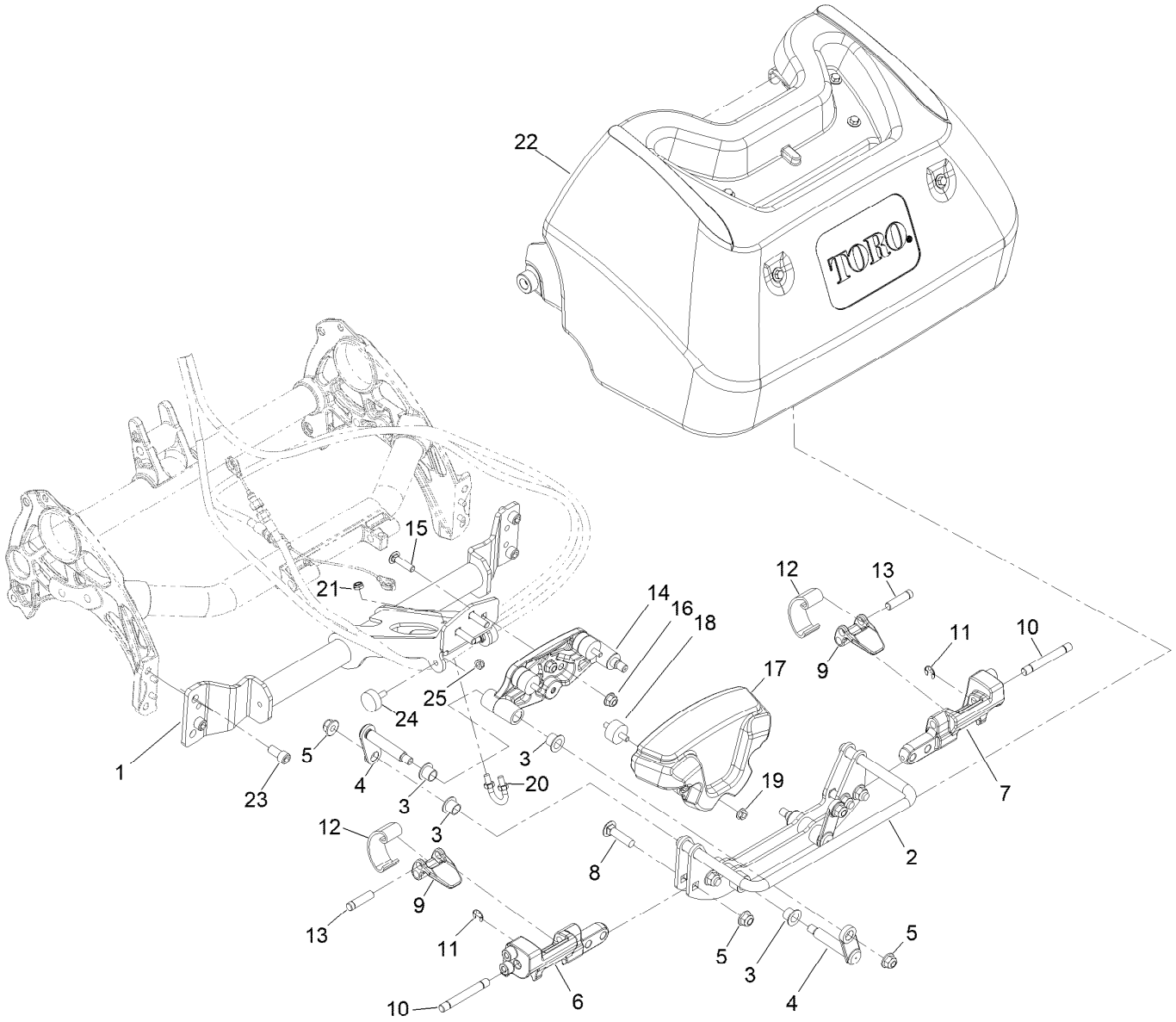


# Frame Assembly

| Ref. | Part Number | Qty. | Description |
|---|---|---|---|
| 1 | 147-2297-01 | 1 | Flex Frame Welded [red] |
| 2 | 139-7397-01 | 1 | Roll Frame ASM, Welded [red] |
| 3 | 125-5239 | 8 | Bushing-Flange |
| 4 | 140-6437 | 4 | Link Flex (Mach) |
| 5 | 104-8301 | 8 | Nut-HF, NI |
| 6 | 139-7372 | 1 | Hub-End, RH |
| 7 | 139-7374 | 1 | Hub-End, LH |
| 8 | 3231-4 | 4 | Screw-CARR |
| 9 | 114-8047 | 2 | Lever |
| 10 | 139-7380 | 2 | Pin-Pivot, Latch |
| 11 | 32120-18 | 2 | E-Ring |
| 12 | 114-8048 | 2 | Spring |
| 13 | 114-8049 | 2 | Pin-Pivot |
| 14 | 139-7439 | 1 | Frame-Link |
| 15 | 99-6005 | 3 | Bolt-Carriage |
| 16 | 104-8300 | 3 | Nut-HF, NI |
| 17 | 140-3399-01 | 1 | Weight-Tmd [red] |
| 18 | 140-3356 | 3 | Isolator-Tmd |
| 19 | 32128-14 | 3 | Nut-HF |
| 20 | 01-170-0040 | 1 | U-Bolt |
| 21 | 3296-56 | 2 | Nut-Lock, NI |
| 22 | 121-4710 | 1 | Grass Basket ASM |
| 23 | 131-8573 | 4 | Screw-HSH |
| 24 | 138-2662 | 2 | Bumper-Rubber |
| 25 | 3296-56 | 2 | Nut-Lock, NI |

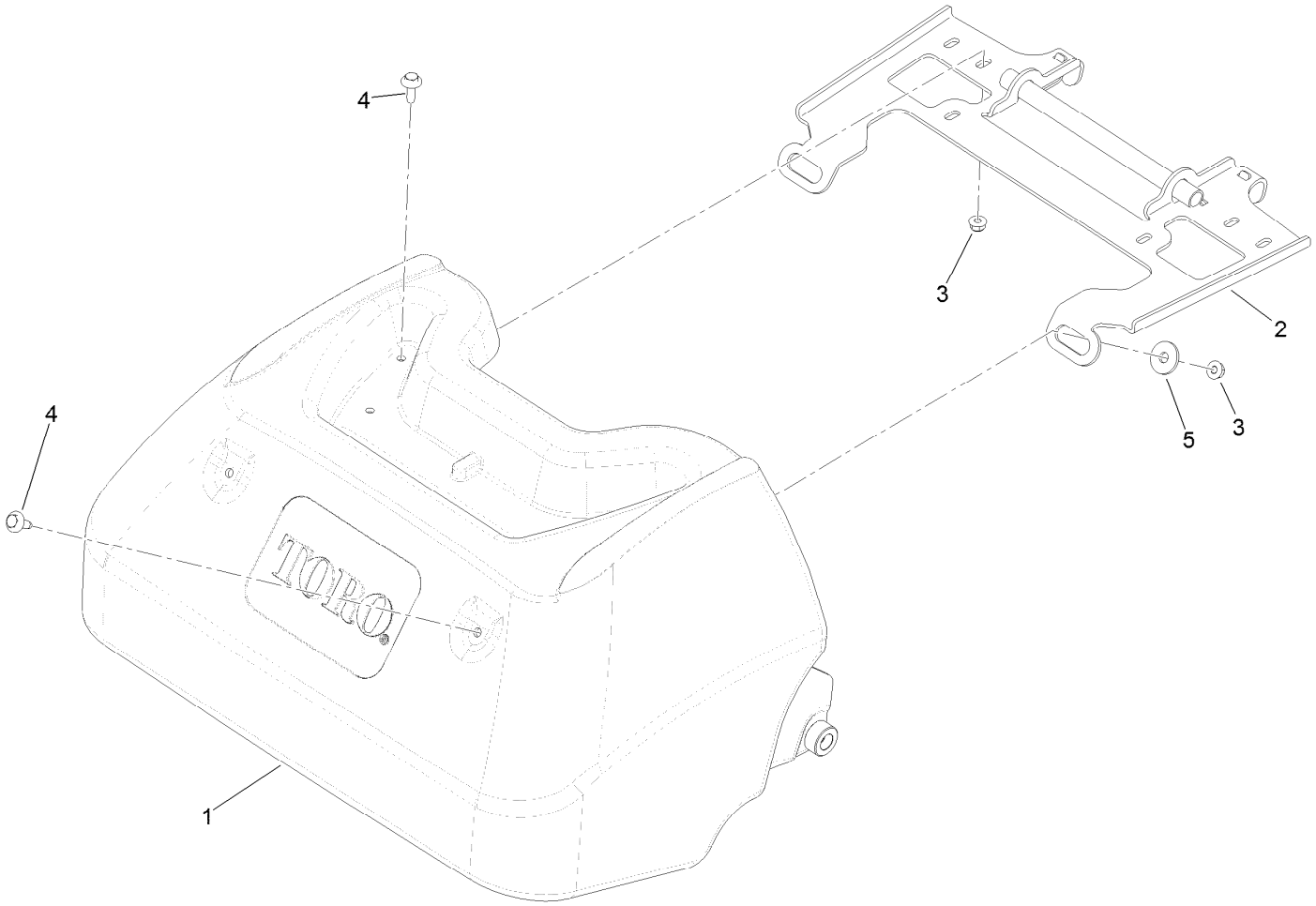


# Grass Basket Assembly No. 121-4710

| Ref. | Part Number | Qty. | Description |
|---|---|---|---|
| 1 | 130-6750 | 1 | Basket ASM |
| 2 | 133-8833-03 | 1 | Bracket-Basket |
| 3 | 119-4040 | 6 | Nut-HF, NI |
| 4 | 119-4012 | 6 | Screw-HWHTF |
| 5 | 1-603716 | 2 | Washer-Friction |

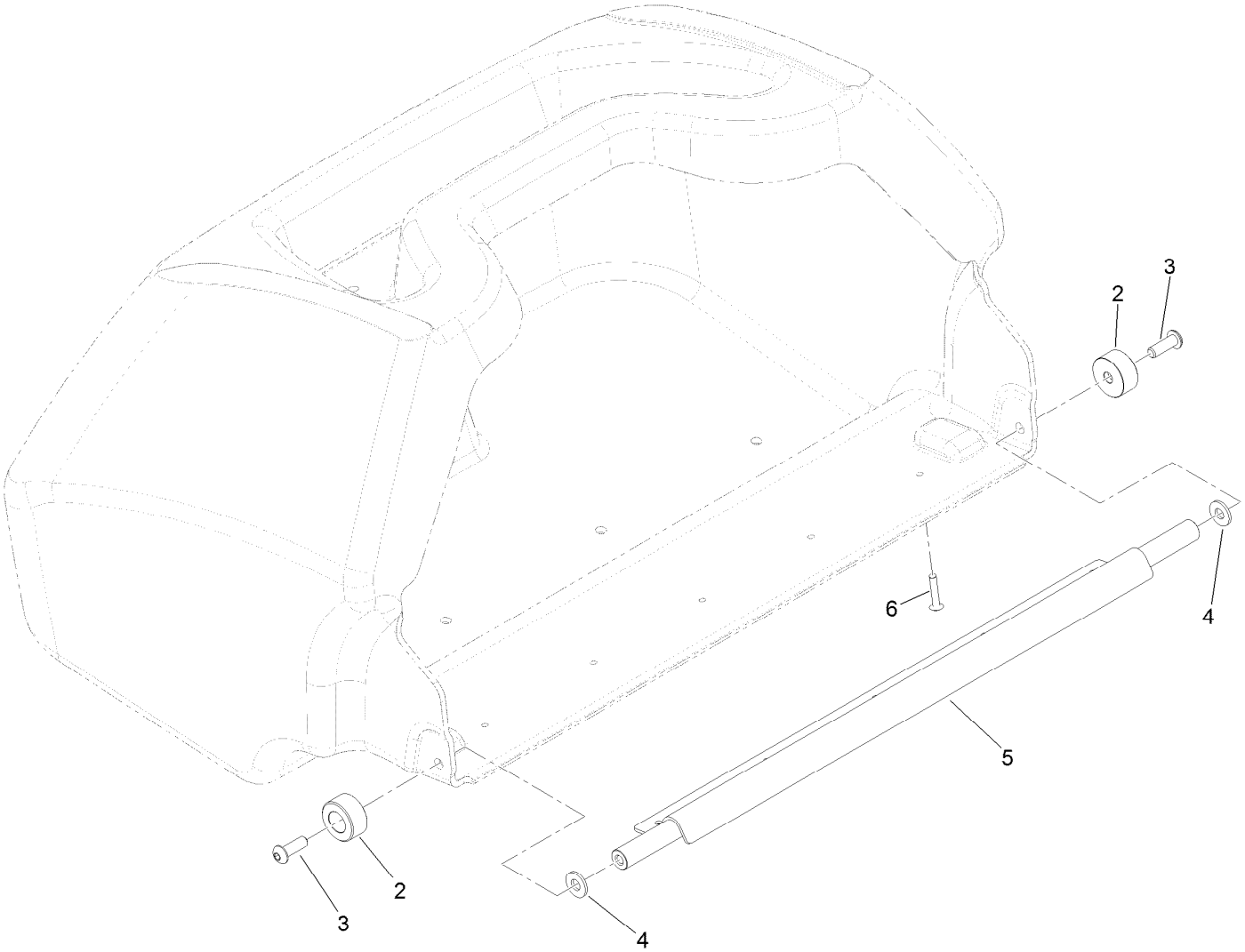


# Basket Assembly No. 130-6750

| Ref. | Part Number | Qty. | Description |
|---|---|---|---|
| 2 | 121-4730 | 2 | Bumper-Basket |
| 3 | 3274-69 | 2 | Screw-HSBH |
| 4 | 120-9679 | 2 | Washer-Flat |
| 5 | 130-6752 | 1 | Channel |
| 6 | 3290-382 | 5 | Rivet-Pop |

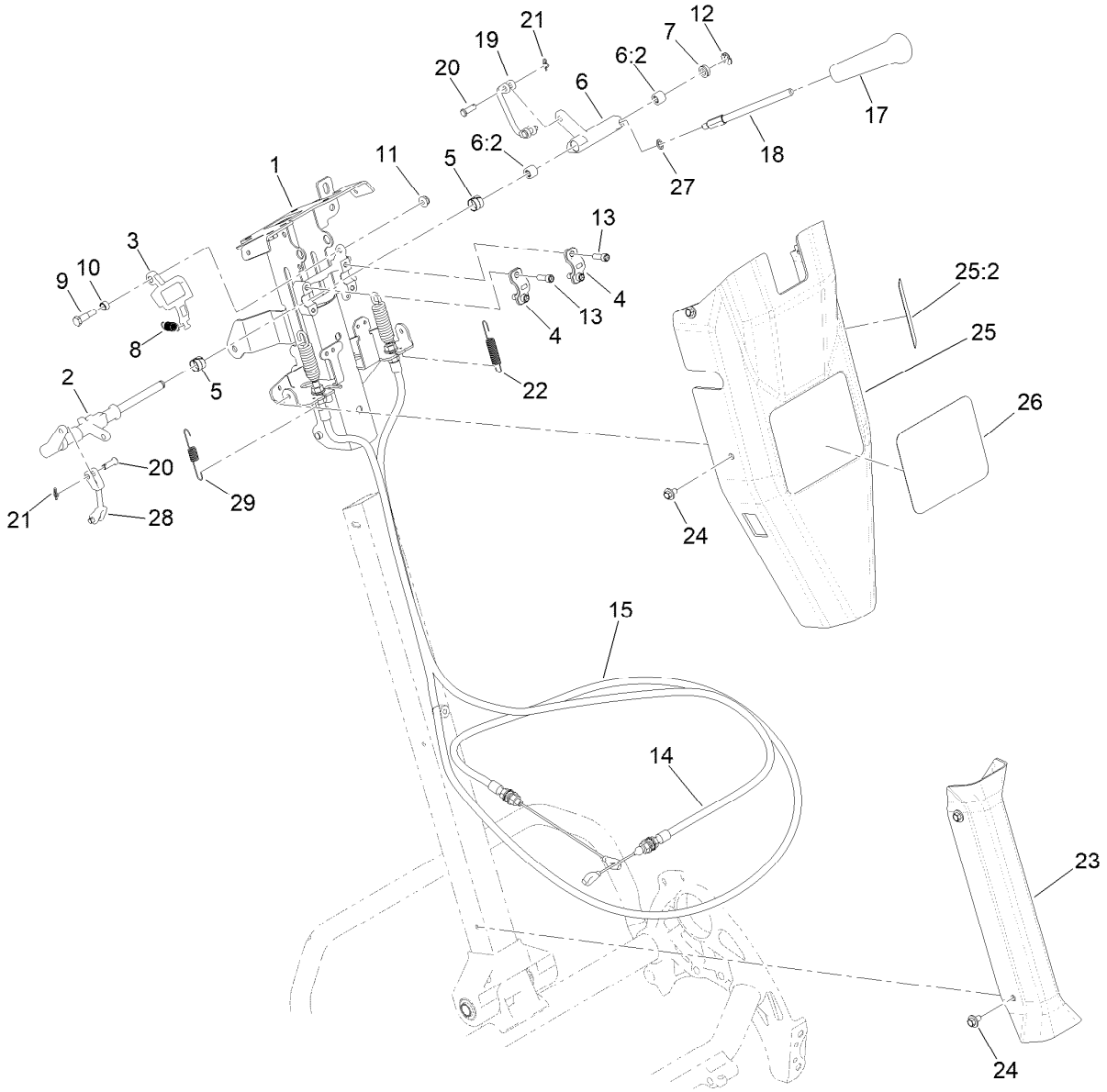


# Reel Controls and Covers Assembly

| Ref. | Part Number | Qty. | Description |
|---|---|---|---|
| 1 | 147-2288 | 1 | Kit- Upper Receiver Replacement |
| 2 | 140-9305 | 1 | Shaft-Main, Controls |
| 3 | 137-0266 | 1 | Cam-Latch, Upper |
| 4 | 138-1513 | 2 | Clamp-Shaft, Control |
| 5 | 137-0263 | 2 | Bushing-Split |
| 6 | 137-0312 | 1 | Reel Lever ASM |
| 6:2 | 138-1637 | 2 | Bearing-Needle |
| 7 | 131-3187 | 1 | Seal-V-Ring |
| 8 | 140-3410 | 1 | Spring-Extension |
| 9 | 137-0313 | 1 | Screw-Shoulder |
| 10 | 137-0346 | 1 | Spacer-Latch, Bail |
| 11 | 104-7201 | 1 | Nut-HF, NI |
| 12 | 32151-47 | 1 | Ring-Retaining |
| 13 | 140-9233 | 4 | Screw-HSH |
| 14 | 137-0180 | 1 | Cable-Clutch |
| 15 | 140-9330 | 1 | Cable-Reel Engagement |

| Ref. | Part Number | Qty. | Description |
|---|---|---|---|
| 17 | 104-9760 | 1 | Knob-Black |
| 18 | 137-0190 | 1 | Rod-Handle, Reel Lever |
| 19 | 137-0232 | 1 | Connector-Clevis |
| 20 | 1-808265 | 4 | Pin-Clevis |
| 21 | 138-1587 | 2 | Clip-Pin, Cotter |
| 22 | 138-1536 | 1 | Spring-Extension |
| 23 | 138-1479 | 1 | Cover-Handle, Lower |
| 24 | 46-6810 | 8 | Screw And Washer ASM |
| 25 | 139-4304 | 1 | Control Upper Cover ASM |
| 25:2 | 138-1589 | 1 | Decal-Reel Drive Engagement |
| 26 | 140-3382 | 1 | Decal-Greensmaster Flex 1018 |
| 27 | 75-5470 | 1 | Spacer-Bearing |
| 28 | 138-1592 | 1 | Connector-Clevis |
| 29 | 140-3417 | 1 | Spring-Extension |

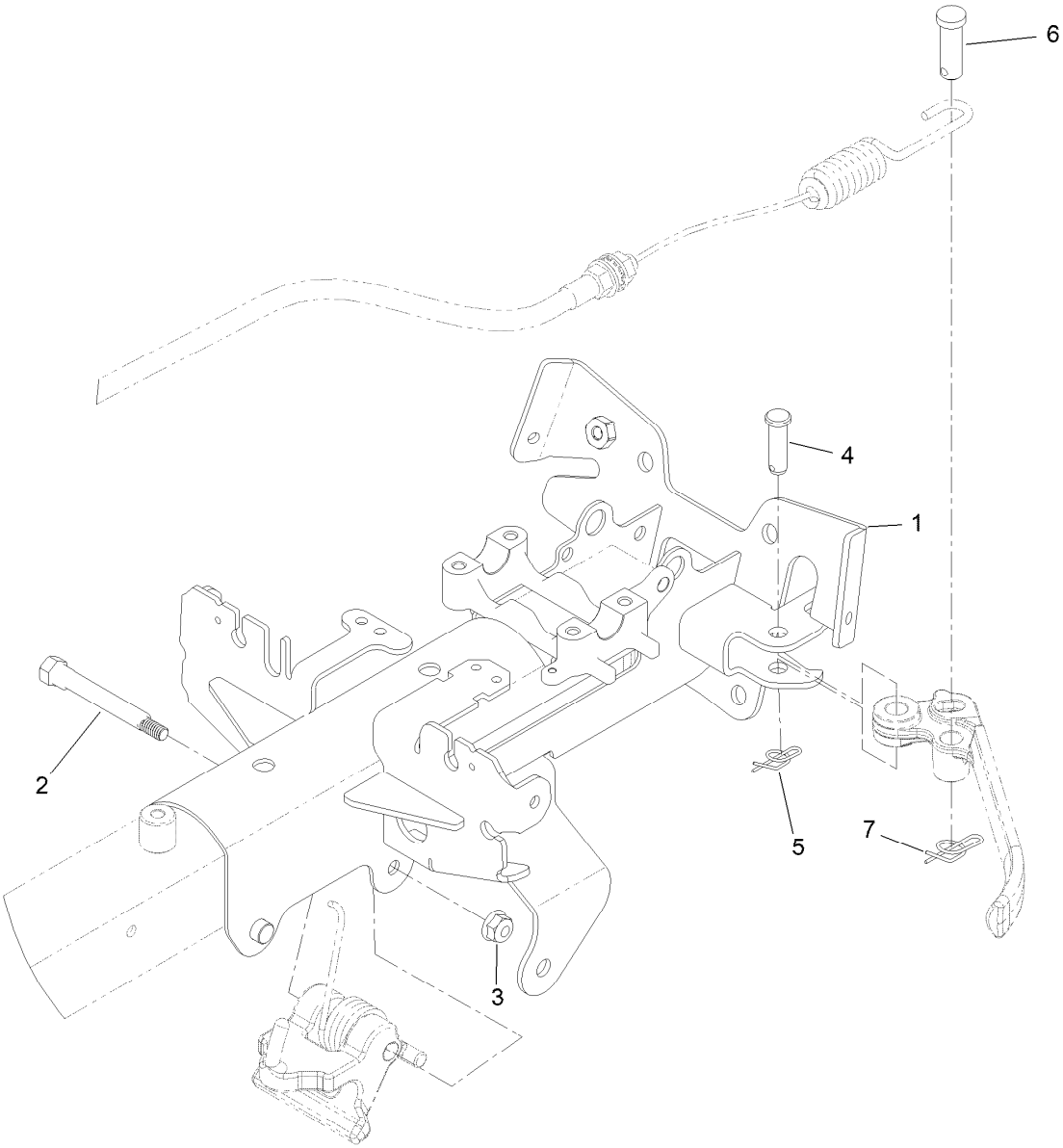


# Upper Receiver Assembly No. 147-2288

| *Ref.* | *Part Number* | *Qty.* | *Description* |
|---|---|---|---|
| 1 | 147-2284-0P | 1 | Upper Receiver, Welded |
| 2 | 147-2269 | 1 | Cam-Handle, Pivot |
| 3 | 119-4040 | 1 | Nut-HF, NI |
| 4 | 283-61 | 1 | Pin-Yoke |
| 5 | 116-6639 | 1 | Pin-Cotter, Locking |
| 6 | 1-808285 | 1 | Pin-Clevis |
| 7 | 140-9312 | 1 | Pin-Cotter, Locking |

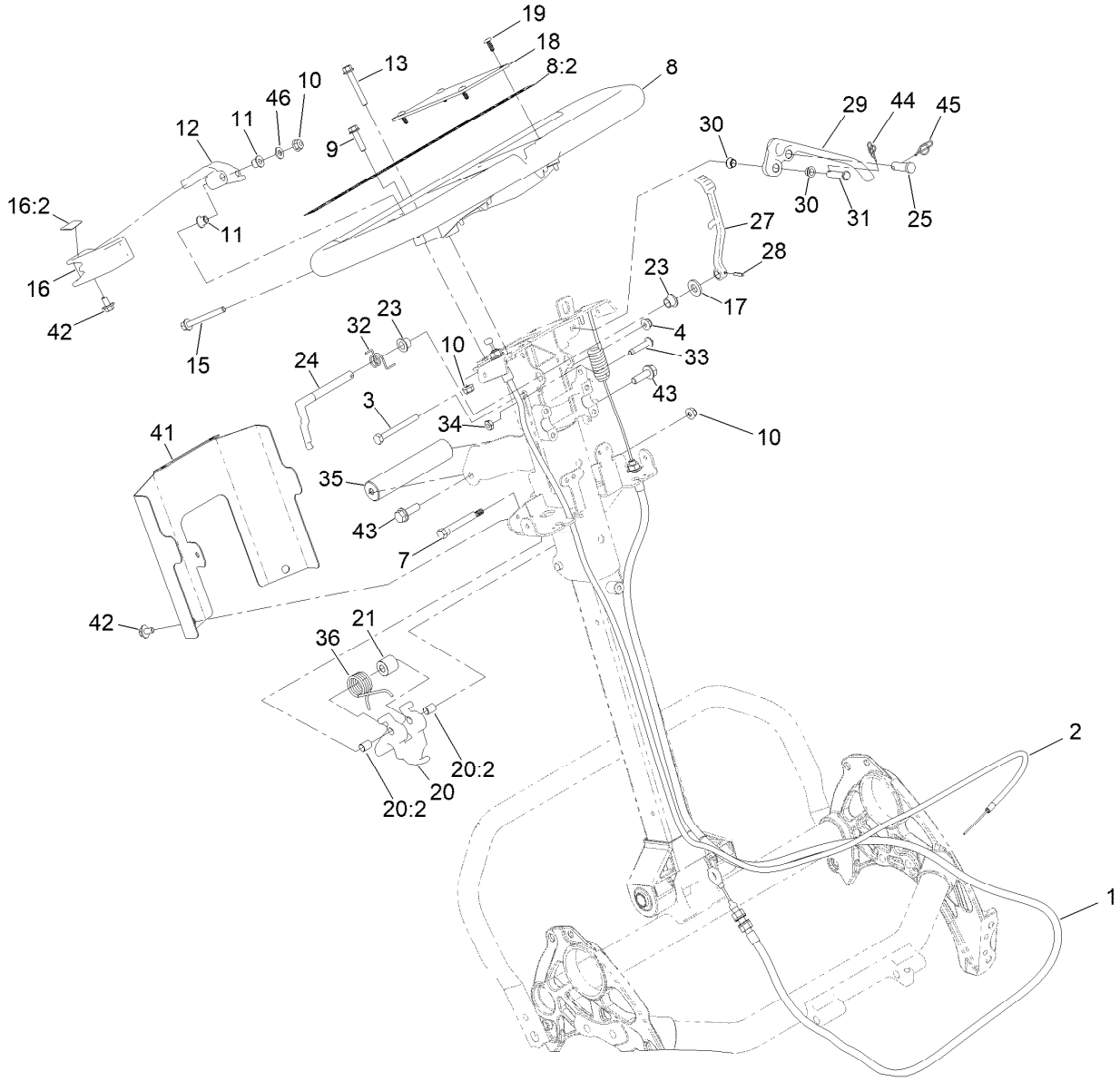


# Upper Handle Assembly

| Ref. | Part Number | Qty. | Description |
|---|---|---|---|
| 1 | 140-9318 | 1 | Cable ASM, Brake |
| 2 | 137-0182 | 1 | Cable-Throttle |
| 3 | 321-15 | 1 | Screw-HH |
| 4 | 104-7201 | 1 | Nut-HF, NI |
| 7 | 147-2269 | 1 | Cam-Handle, Pivot |
| 8 | 138-1645 | 1 | Handle ASM |
| 8:2 | 138-5532 | 1 | Decal-Warning, General |
| 9 | 120-4654 | 2 | Screw-HHF |
| 10 | 119-4040 | 4 | Nut-HF, NI |
| 11 | 138-3538 | 2 | Bushing-Flange |
| 12 | 138-1636 | 1 | Arm-Throttle |
| 13 | 138-5527 | 1 | Screw-HHF |
| 15 | 140-9317 | 1 | Screw-HHF,Lock |
| 16 | 139-4303 | 1 | Throttle Lever ASM |
| 16:2 | 138-5534 | 1 | Decal-Throttle |
| 17 | 100-4852 | 1 | Washer-Hardened |
| 18 | 138-5514 | 1 | Plate-Notepad, Handle |
| 19 | 127-6843 | 4 | Screw-Plastite, Torx Pan |
| 20 | 137-0317 | 1 | Handle Adjuster ASM |
| 20:2 | 137-0308 | 2 | Bushing-Igus |

| Ref. | Part Number | Qty. | Description |
|---|---|---|---|
| 21 | 140-9335 | 1 | Spacer-Spring |
| 23 | 138-1514 | 2 | Bushing-Flange |
| 24 | 138-1573 | 1 | Latch-Brake |
| 25 | 1-808285 | 1 | Pin-Clevis |
| 27 | 140-3377 | 1 | Lever-Lock, Brake |
| 28 | 32121-73 | 1 | Pin-Roll |
| 29 | 140-9298 | 1 | Lever-Brake |
| 30 | 138-5538 | 2 | Bushing-Flange |
| 31 | 283-6 | 1 | Pin-Clevis |
| 32 | 138-1518 | 1 | Spring-Brake, Torsion |
| 33 | 132-6777 | 1 | Screw-Twh Thd Roll |
| 34 | 120-9695 | 1 | Nut-Jam |
| 35 | 138-1535 | 1 | Handle-Assist, Lift |
| 36 | 140-9334 | 1 | Spring-Handle, Torsion |
| 41 | 138-5530-03 | 1 | Cover-Bottom, Controls |
| 42 | 46-6810 | 3 | Screw And Washer ASM |
| 43 | 115-5142 | 2 | Screw-HHF |
| 44 | 116-6639 | 1 | Pin-Cotter, Locking |
| 45 | 140-9312 | 1 | Pin-Cotter, Locking |
| 46 | 139-1323 | 2 | Washer-Spcl |

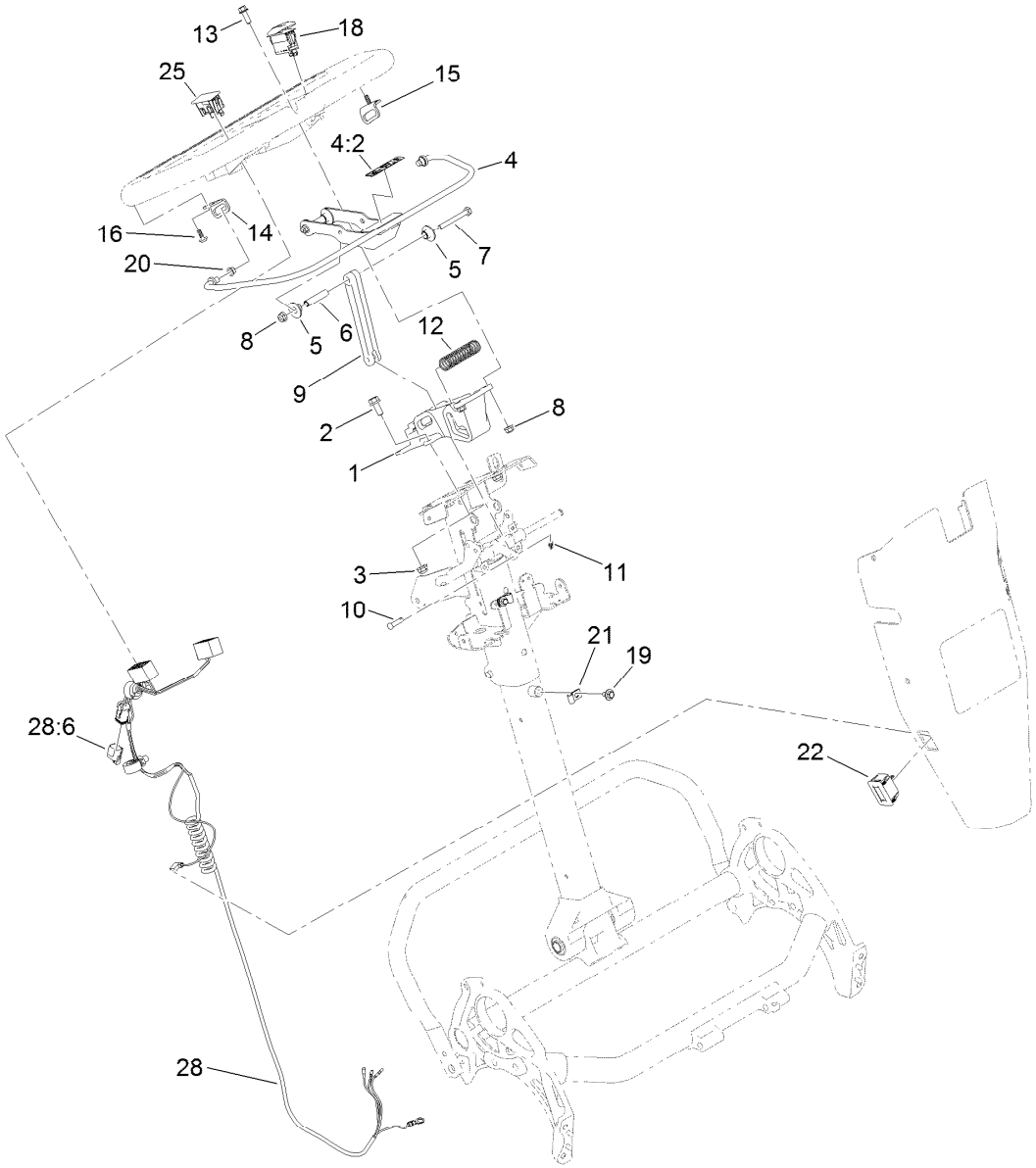


# Traction Bail Assembly

| Ref. | Part Number | Qty. | Description |
|---|---|---|---|
| 1 | 138-5524 | 1 | Mount-Handle |
| 2 | 3234-47 | 2 | Screw-HHF |
| 3 | 119-4041 | 2 | Nut-HF |
| 4 | 139-4302 | 1 | Clutch Bail ASM |
| 4:2 | 138-5533 | 1 | Decal-Bail, Traction |
| 5 | 138-3466 | 4 | Bushing-Flange |
| 6 | 138-3465 | 2 | Spacer-Tube |
| 7 | 321-18 | 2 | Screw-HH |
| 8 | 119-4040 | 4 | Nut-HF, NI |
| 9 | 138-5515 | 1 | Link-Bail, Clutch |
| 10 | 353-322 | 1 | Pin-Clevis |
| 11 | 138-1587 | 1 | Clip-Pin, Cotter |
| 12 | 138-3468 | 1 | Spring-Compression |

| Ref. | Part Number | Qty. | Description |
|---|---|---|---|
| 13 | 120-9678 | 2 | Screw-HHF |
| 14 | 138-3539 | 1 | Bracket-Bail, RH |
| 15 | 138-3540 | 1 | Bracket-Bail, LH |
| 16 | 138-5775 | 2 | Screw-Delta Point |
| 18 | 122-1497 | 1 | Switch-Rocker, On-None-Off |
| 19 | 46-6810 | 2 | Screw And Washer ASM |
| 20 | 138-5538 | 2 | Bushing-Flange |
| 21 | 2412-91 | 2 | Clamp |
| 22 | 119-1347 | 1 | Meter-Hour |
| 25 | 119-7791 | 1 | Plug-Hole |
| 28 | 122-1416 | 1 | Harness-Wire |
| 28:6 | 32180-091 | 1 | Cap-Dust, 2 Way |

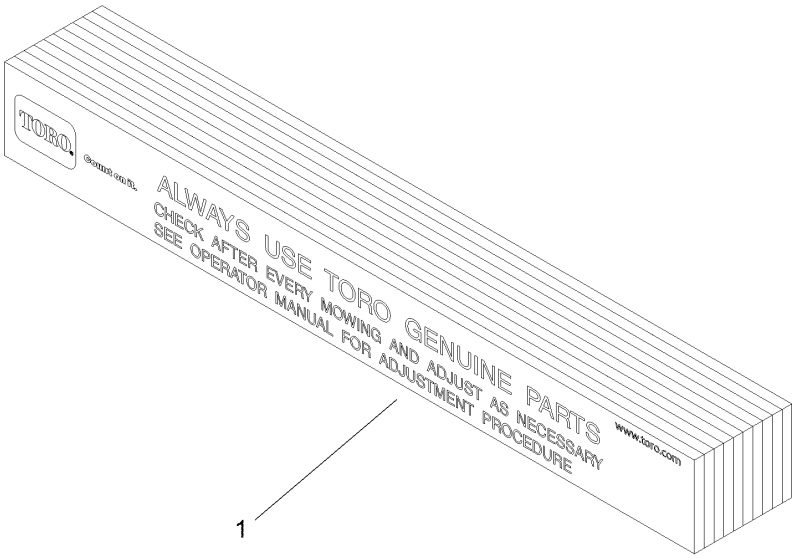


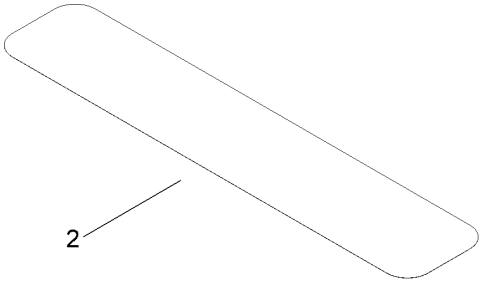


# Miscellaneous Parts Assembly

| *Ref.* | *Part Number* | *Qty.* | *Description* |
|---|---|---|---|
| 1 | 125-5610 | 1 | Paper-Reel, Toro (10 Pack) |
| 2 | 140-5531 | 1 | Shim-Toro Reel (.002In) |

# Attachments and Accessories

## For 04850 Greensmaster Flex 1018 Traction Unit

| Product Name | Model/Part |
|---|---|
| Turf Evaluator | 04399 |
| 14-Blade 18in Flex ES CU | 04854 |
| Narrow Wiehle Roller Kit, Greensmaster Flex 1018 Traction Unit | 04026 |
| Full Front Roller Asm (18 Inch) | 04814 |
| Roller ASM, Wide Wiehle | 140-3441 |
| Roller ASM, Extended Wiehle | 140-9214 |
| Front Scraper Kit for Narrow Wiehle Roller | 120-9615 |
| Front Scraper Kit for Wide Wiehle Roller | 120-9616 |
| Front Scraper Kit for Full Roller | 120-9617 |
| Front Brush Kit for Narrow Wiehle Roller | 120-9621 |
| Front Brush Kit for Wide Wiehle Roller | 120-9622 |
| Front Brush Kit for Full Roller | 120-9623 |
| Steel Rear Roller ASM | 121-4682 |
| Rear Roller ASM, 18 Inch | 140-9258 |
| Rear Roller Scraper Kit with Roller | 120-9627 |
| Universal Groomer Drive Kit | 04648 |
| 18in Soft Grooming Brush | 04268 |
| 18in Stiff Grooming Brush | 04269 |
| 18in Twin Tip Groomer Reel | 04801 |
| 18in Soft Grooming Brush Kit | 127-1545 |
| 18in Stiff Grooming Brush Kit | 127-1546 |
| Roller Extension Kit | 115-7361 |
| High Height-of-Cut Arms (Qty 1) | 120-9600 |
| Rear Roller Adjustment (Qty 1) | 120-9602 |
| Access Backlap Kit | 139-4342 |
| Premium Engine Oil 10w30 (55 Gallon Drum) | 121-6392 |
| Premium Engine Oil 10w30 (5 Gallon Pail) | 121-6393 |
| Bedbar | 110-2281-01 |
| Bedbar-Aggressive | 110-2281-0P |
| Bedknife-Microcut, Extended | 110-2300 |
| Bedknife-Low Cut | 110-2301 |
| Bedknife-EDGEMAX, Microcut | 117-1530 |
| Bedknife-EDGEMAX, Tournament | 117-1532 |
| Bedknife-EDGEMAX, Microcut Short | 139-4318 |
| Bedknife-EDGEMAX, Tournament Short | 139-4319 |
| Bedknife-Tournament | 98-7260 |
| Bedknife-Microcut | 98-7261 |
| Blade-GR Groomer, Twin Tip (0.032in) | 140-5580 |
| Blade-GR Groomer, Helix (0.028in) | 140-5581 |
| Blade-GR Groomer, Helix (0.015"in) | 140-5582 |
| Wheel Kit | 04123 |
| Light Kit (2019+) | 04135 |
| Push Broom Kit, Walk Greensmower (2019+) | 04136 |
| CU Light Kit Mount | 04138 |
| Wireless Hour Meter Kit | 139-4369 |
| MVP Kit-Cutting Unit Re-Build | 121-2637 |

# Attachments and Accessories (continued)

Grease-Synthetic ..... 136-8595
Toro Reel Paper (10 Pack) ..... 125-5610
Angle Indicator ..... 131-6828
Angle Indicator Mount ..... 131-6829
Shim-TORO Reel (.002in) ..... 140-5531
Height-of-Cut Bar ..... 94-9010
Trans Pro 80 Tow-Behind Trailer ..... 04238
Flat Ramp ..... 04245
Rail Ramp Kit (Update) ..... 04247
Wheel Loading Kit, Tp200 ..... 04219
Rail Loading Kit, Tp200 ..... 04229
TRANS PRO 200 ..... 04239
18in Rail Conversion Kit ..... 110-7345
Rail Ramp Kit TP100 ..... 138-5011
Rod Replacement Kit, Greensmaster 1018 Series Traction Unit with Trans Pro 100 Tow-Behind Trailer ..... 139-6470
Retention Straps Kit ..... 139-6477
Kit-flex Roller Bracket, Tp80 ..... 147-2291

**Notes:**

**Notes:**

TORO®

Count on it.