FORM NO. 3311-921

TORO®

MODEL NO. 30940 — 2000001 & UP

PARTS CATALOG

POWER BLOWER

40cc BACK PACK

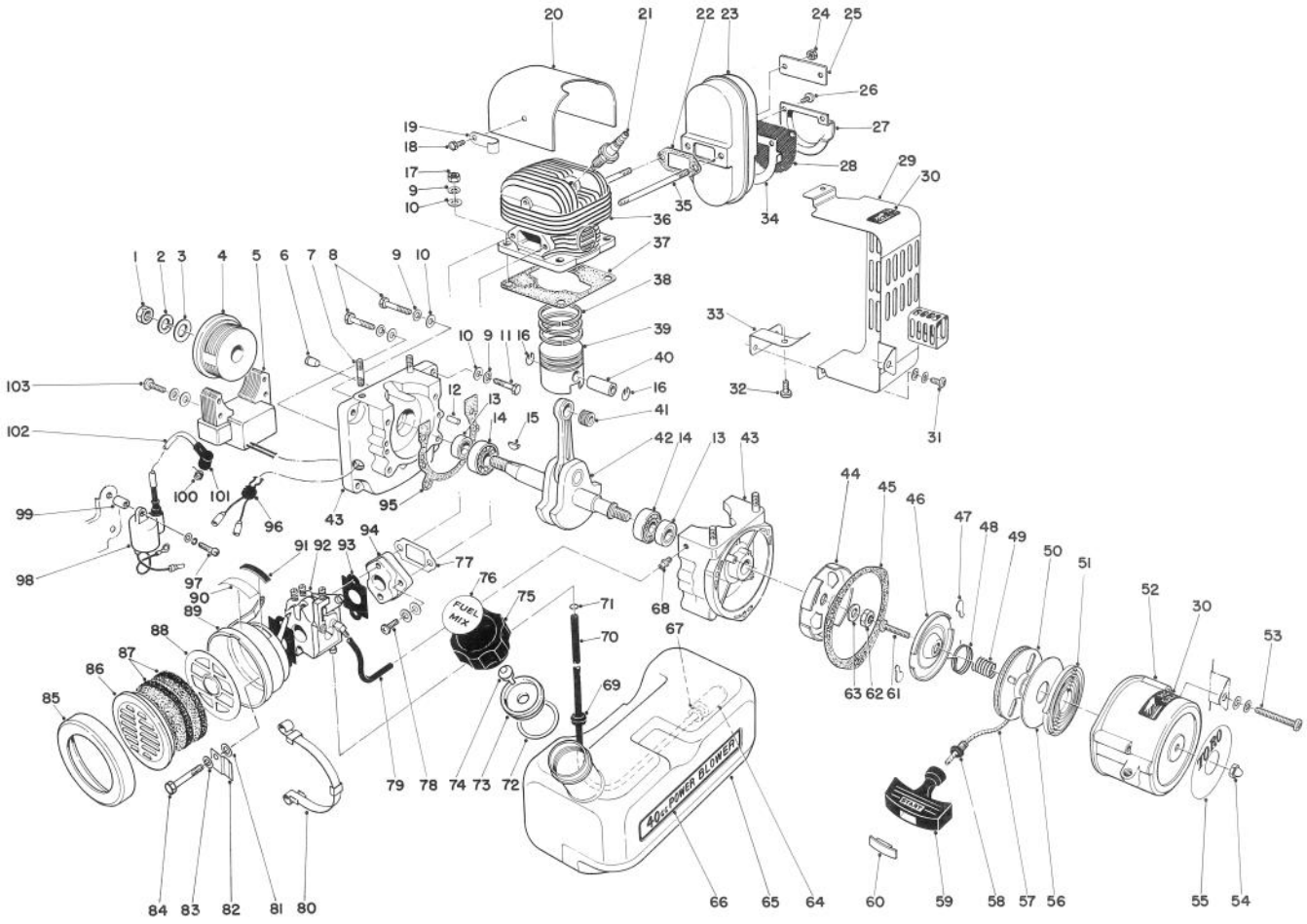

ENGINE ASSEMBLY

Ref. No.	Part No.	Description	No. Used
1	41-6120	Nut	1
2	41-6110	Spring Washer	1
3	41-6140	Washer	1
4	46-4440	Rotor	1
5	46-4450	C.D.I. Module	1
6	46-4400	Plug	1
7	41-0400	Stud Bolt	4
8	41-0370	Bolt	4
9	41-5500	Spring Washer	12
10	41-5450	Washer	12
11	41-4850	Bolt	4
12	41-0320	Knock Pin	2
13	41-0300	Oil Seal	2
14	41-5680	Ball Bearing	2
15	41-6160	Woodruff Key	1

Ref. No.	Part No.	Description	No. Used
16	41-0140	Circlip, Piston Pin	2
17	41-5360	Nut	4
18	41-4840	Bolt	2
19	41-2550	Clamp	1
20	41-0600	Cylinder Cover	1
21	41-2500	Spark Plug	1
22	41-1900	Gasket Muffler	1
23	41-2110	Muffler	1
24	41-2080	Locknut	2
25	41-2030	Washer	1
26	41-5160	Screw	2
27	41-2200	Holder Screen	1
28	41-9360	Screen	1
29	46-4420	Muffler Cover	1
30	42-6210	Decal — Hot Surface	2

COPYRIGHT © ALL RIGHTS RESERVED

The Toro Company — 1982
MINNEAPOLIS, MN 55420 — U.S.A.

PRICE $1.00

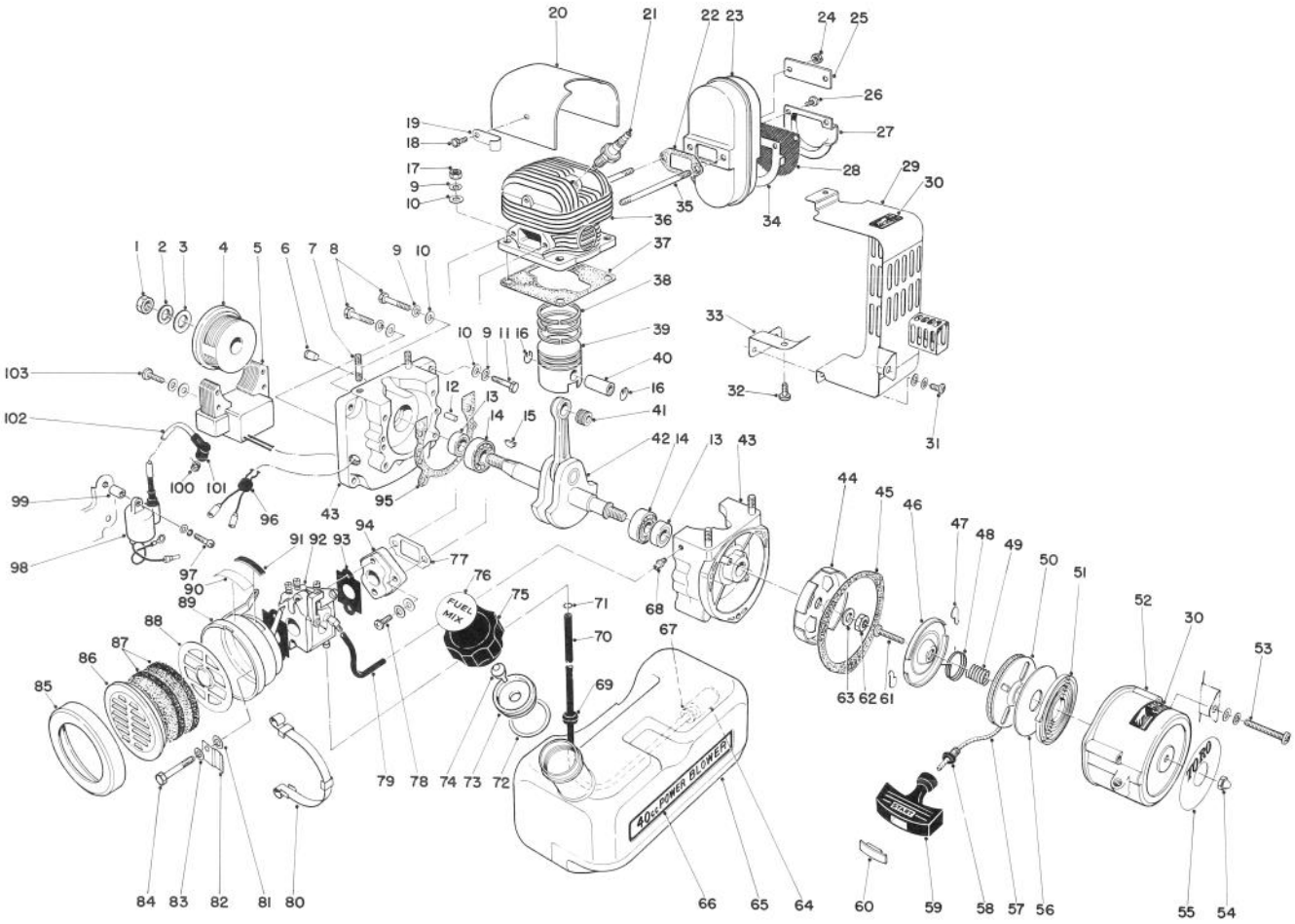

ENGINE ASSEMBLY (Continued)

Ref. No.	Part No.	Description	No. Used
31	41-5200	Screw	2
32	41-7590	Screw	2
33	46-4430	Supporter	1
34	46-4410	Seat Screen	1
35	41-0530	Stud Bolt	2
36	41-0460	Cylinder	1
37	41-0470	Packing, Cylinder Base	1
38	41-0060	Piston Ring	3
39	41-0020	Piston	1
40	41-0110	Piston Pin	1
41	41-0080	Needle Bearing	1
42	41-0170	Crankshaft Assembly	1
43	41-0220	Crankcase Set	1
44	41-2880	Pawl Catcher	1
45	41-0430	Packing, Starter Case	1
46	41-2890	Friction Plate	1
47	41-2970	Ratchet	2
48	41-3140	Ratchet Spring	1
49	41-3130	Spring	1
50	41-2930	Recoil Drum	1
51	41-2990	Rewind Spring	1
52	41-3120	Starter Case	1
53	41-5270	Screw	3

Ref. No.	Part No.	Description	No. Used
54	41-3180	Cap Nut	1
55	44-7470	Decal — Toro	1
56	41-3160	Side Plate, Starter	1
57	41-3030	Starter Rope	1
58	41-3050	Rope Guide	1
59	46-4470	Starter Handle	1
60	41-3210	Cap, Starter Handle	1
61	41-3170	Screw	1
62	41-6180	Nut	1
63	41-2750	Washer	1
64	46-4280	Fuel Strainer	1
65	41-1550	Fuel Tank	1
66	41-5800	Decal — 40cc	1
67	41-5490	Washer	1
68	41-1360	Connector	1
69	41-1890	Grommet	1
70	41-1800	Fuel Pipe	1
71	46-3950	Clip Fuel Pipe	1
72	46-4520	Gasket, Fuel Tank	1
73	46-4510	Holder, Check Valve	1
74	41-1680	Check Valve	1
75	46-4290	Cap, Fuel Tank	1
76	41-4730	Decal, Fuel Mix	1

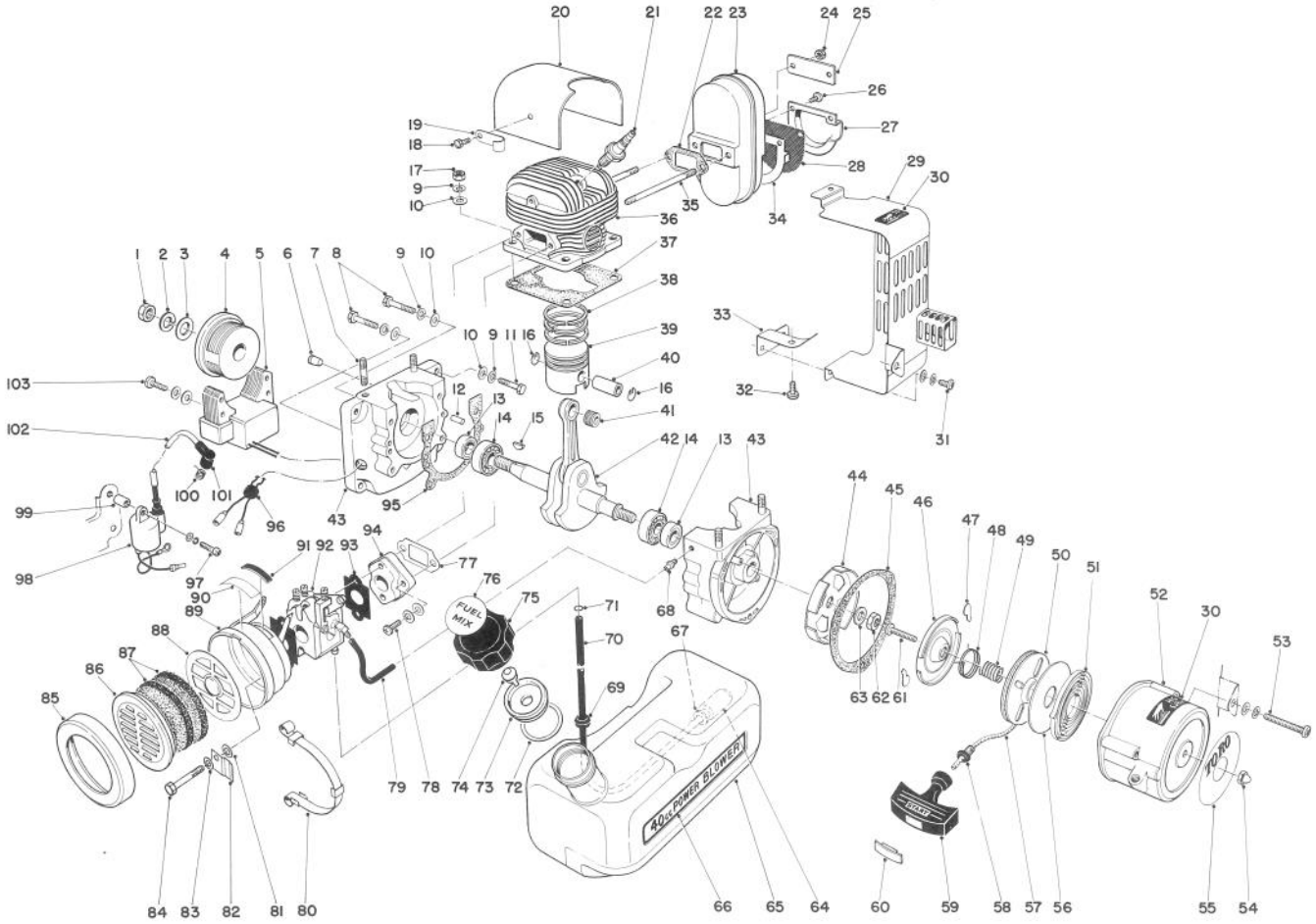

ENGINE ASSEMBLY (Continued)

Ref. No.	Part No.	Description	No. Used
77	46-4480	Gasket	1
78	41-5300	Screw	2
79	41-1370	Pipe	1
80	46-4640	Retainer	1
81	46-3600	Washer	1
82	46-2360	Choke Clip	1
83	41-0390	Washer	2
84	41-1310	Bolt	1
85	41-1520	Holder, Air Cleaner	1
86	41-1460	Cover, Air Cleaner	1
87	41-1410	Air Filter	2
88	41-1500	Grid	1
89	46-4490	Cleaner Case	1
90	41-4760	Decal, Caution	1
91	46-4630	Plug	1

Ref. No.	Part No.	Description	No. Used
92	41-0660	Carburetor Assembly	1
93	41-1250	Gasket	2
94	41-1170	Insulator	1
95	41-0340	Packing, Crankcase	1
96	46-4460	Grommet	1
97	41-5180	Screw	2
98	46-4530	Ignition Coil	1
99	46-4540	Spacer	2
100	41-2510	Coil Spring, Spark Plug Cap	1
101	41-2520	Cap, Spark Plug	1
102	41-2280	Sleeve	1
103	41-5240	Screw	2
*	41-2820	Recoil Starter Assembly	1
*	46-4500	Cap Assembly Fuel Tank	1

*Not Illustrated

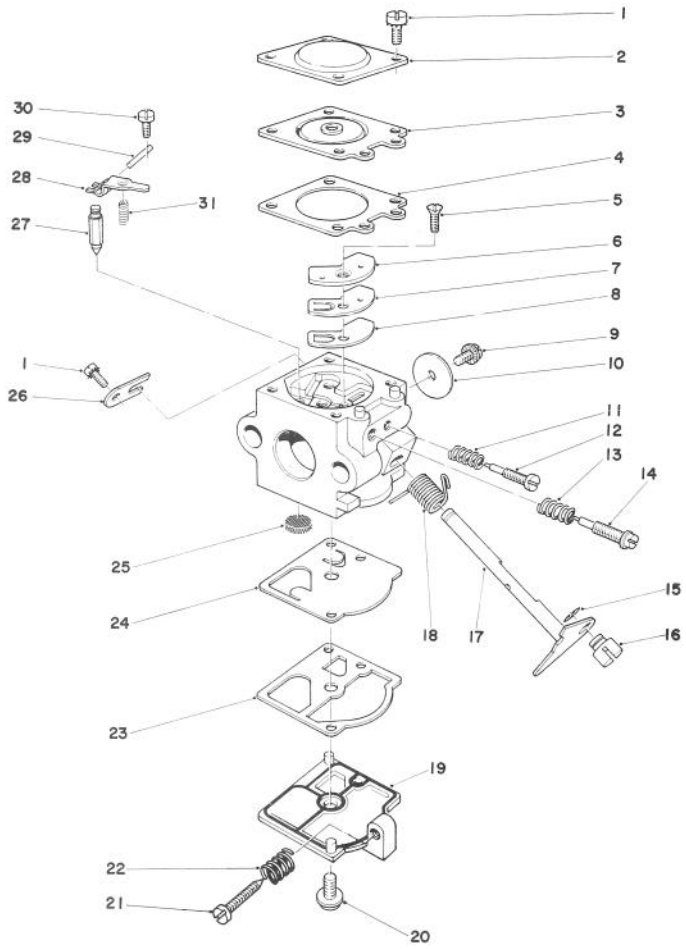

CARBURETOR ASSEMBLY

Ref. No.	Part No.	Description	No. Used
1	41-1070	Screw	5
2	41-1060	Cover, Metering Diaphragm	1
3	41-1050	Diaphragm, Metering	1
4	41-1040	Gasket, Metering Diaphragm	1
5	41-1110	Screw, Circuit Plate	1
6	41-1100	Plate, Circuit	1
7	41-1090	Diaphragm, Circuit Plate	1
8	41-1080	Gasket, Circuit Plate	1
9	41-0730	Screw, Throttle Valve	1
10	41-0740	Valve, Throttle	1
11	41-0860	Spring, Idle Needle	1
12	41-0800	Needle, Idle	1
13	41-0820	Spring, High Speed Needle	1
14	41-0830	Needle, High Speed	1
15	41-0950	Clip	1
16	41-1120	Swivel	1
17	41-0770	Shaft Assembly, Throttle	1

Ref. No.	Part No.	Description	No. Used
18	41-0720	Spring, Throttle Return	1
19	41-0890	Cover, Fuel Pump	1
20	41-0700	Screw, Pump Cover	1
21	41-0990	Screw, Idle Adjustment	1
22	41-0970	Spring, Idle Screw	1
23	41-0920	Gasket, Fuel Pump	1
24	41-0710	Diaphragm, Fuel Pump	1
25	41-0930	Screen, Inlet	1
26	41-0940	Clip, Throttle Shaft	1
27	41-1010	Valve, Inlet Needle	1
28	41-0880	Lever, Metering	1
29	41-1020	Pin, Metering Lever	1
30	41-1030	Screw, Metering Lever Pin	1
31	41-0870	Spring, Metering Lever	1
*	41-0660	Carburetor Assembly (Incl. Ref. #1-31)	1

*Not Illustrated

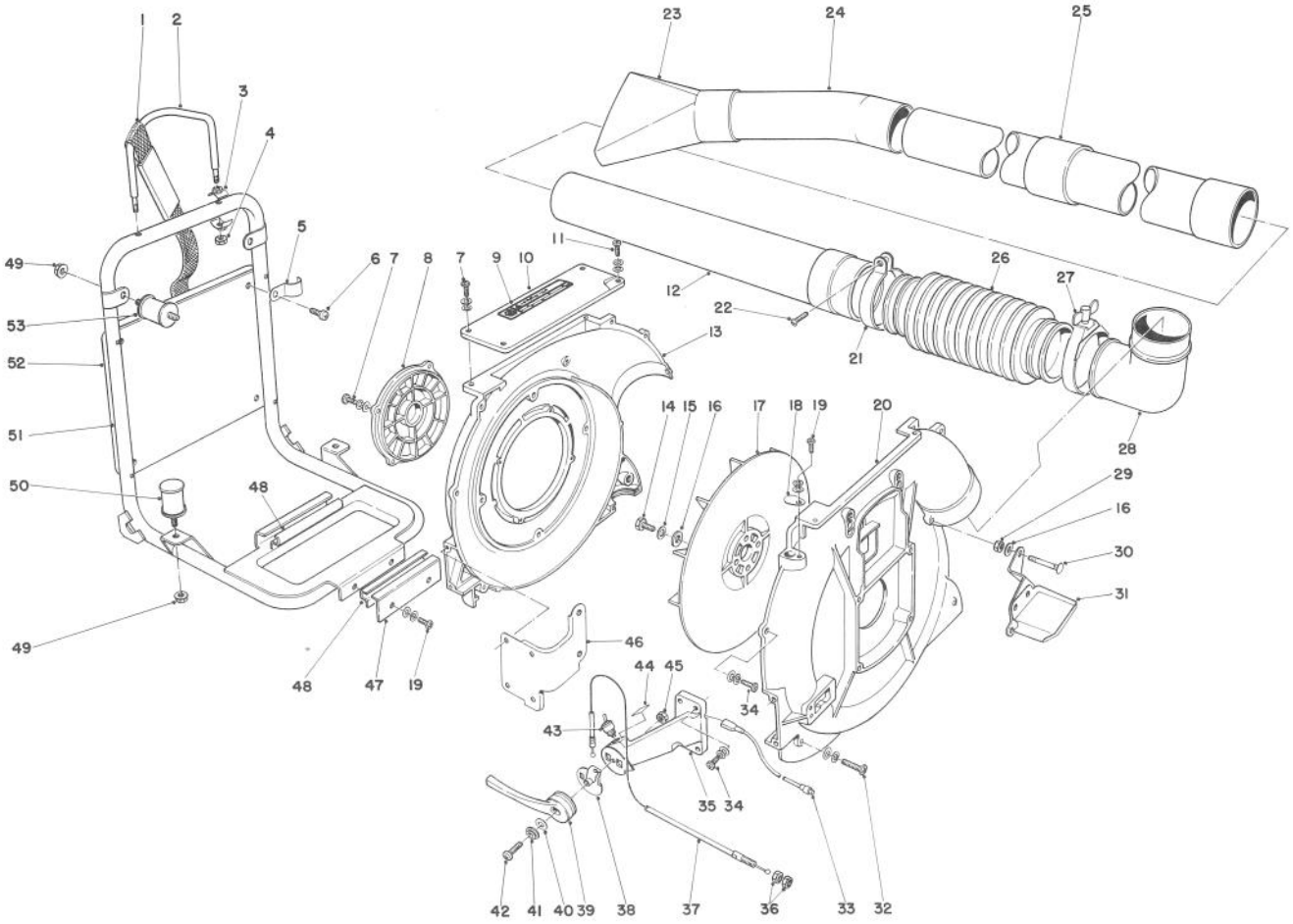

BACK PACK AND BLOWER HOUSING ASSEMBLY

Ref. No.	Part No.	Description	No. Used
1	40-2610	Shoulder Strap	2
2	41-3990	Arm	1
3	41-4000	Adapter	4
4	41-4010	Locknut	2
5	41-3960	Bracket Cushion	4
6	3290-144	Screw Hex Hd.	4
7	41-5280	Screw	7
8	46-4590	Grid, Fan Case	1
9	44-7450	Decal – Warning	1
10	46-4580	Plate	1
11	41-5290	Screw	1
12	41-3940	Straight Pipe w/Swivel	1
13	46-4570	Fan Case, Operator Side	1
14	41-4800	Bolt	4
15	41-5490	Spring Washer	4
16	41-5440	Washer	2
17	41-3680	Fan	1
18	41-3760	Plug	1
19	41-5190	Screw	3
20	41-3700	Fan Case, Recoil Starter Side	1
21	41-3890	Clamp	1
22	41-5110	Screw	1
23	41-3870	Fan Head Nozzle	1

Ref. No.	Part No.	Description	No. Used
24	41-3860	Curved Pipe	1
25	41-3840	Straight Pipe	2
26	41-3820	Flexible Pipe	1
27	41-3910	Clamp	1
28	41-3800	Elbow	1
29	41-3930	Cap Nut	1
30	41-3920	Bolt, Blowing Elbow	2
31	46-4560	Bracket, Muffler Cover	1
32	41-5240	Screw	2
33	46-4620	Lead, Switch	1
34	41-5230	Screw	8
35	41-3510	Bracket Throttle Lever	1
36	41-5380	Nut	2
37	41-3260	Throttle Cable	1
38	41-3520	Bracket	1
39	46-4610	Throttle Lever	1
40	41-5450	Washer	1
41	41-3550	Washer	1
42	41-5130	Screw	1
43	41-2640	Switch	1
44	41-4750	Decal – Stop	1
45	41-5360	Nut	1
46	46-4550	Bracket	1

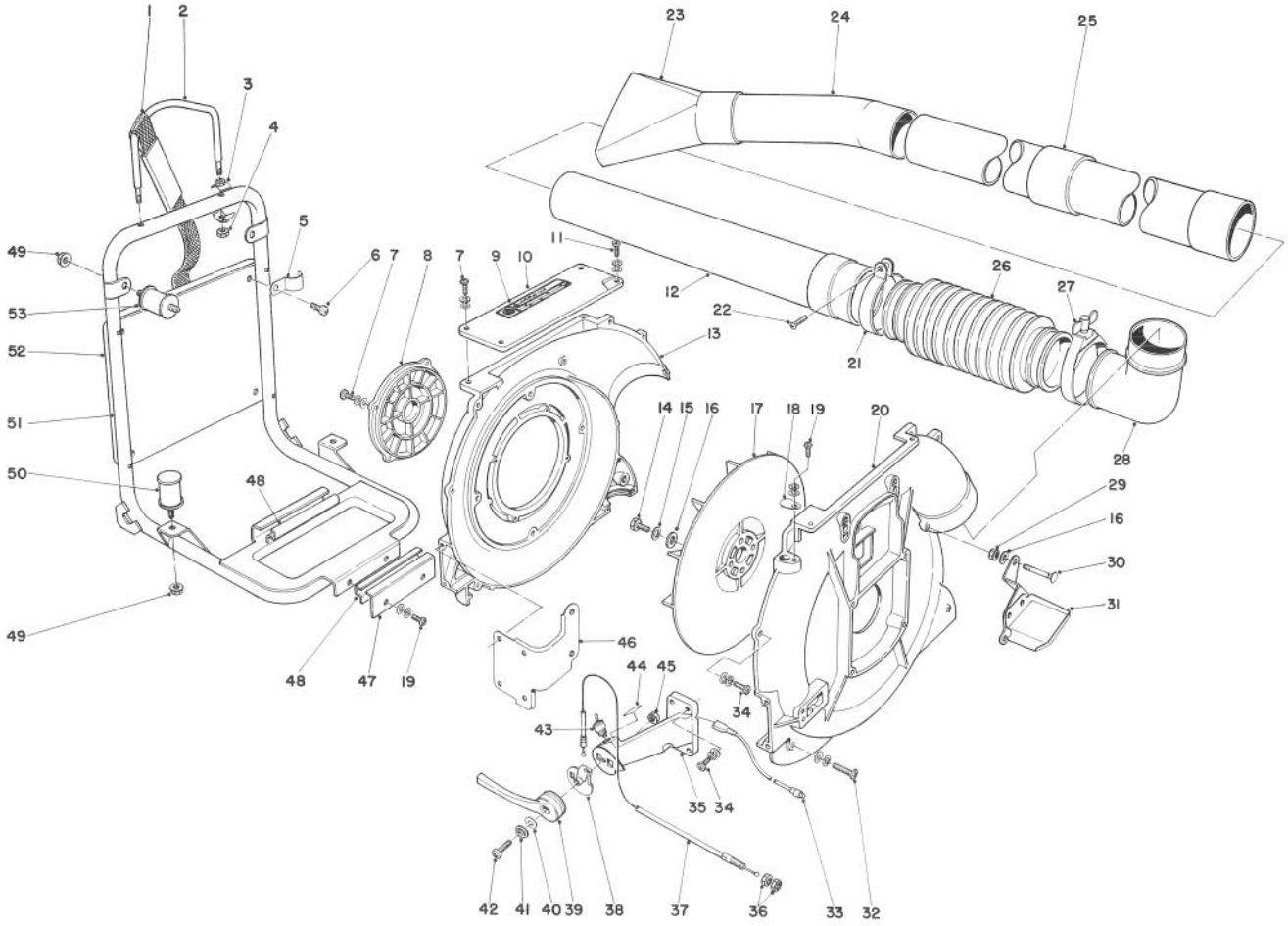

BACK PACK AND BLOWER HOUSING ASSEMBLY (Continued)

Ref. No.	Part No.	Description	No. Used
47	41-1710	Bracket – Fuel Tank	1
48	41-1740	Cushion – Fuel Tank	2
49	46-4600	Nut	4
50	41-3790	Cushion	2

Ref. No.	Part No.	Description	No. Used
51	41-3950	Frame, Back Pack	1
52	40-5170	Back Pack Pad	1
53	41-3780	Cushion	2
*	44-7400	Ear Plug Kit	1

*Not Illustrated

The Toro Promise

A ONE YEAR LIMITED WARRANTY

The Toro Company promises to repair your TORO Product if defective in materials or workmanship. The following time periods from the date of purchase apply:

Residential Product . . . . . 90 Days
Residential Products Used Commercially . . . 30 Days

The costs of parts and labor are included, but the customer pays the transportation costs. Just return any residential product to an Authorized TORO Service Dealer or TORO Distributor.

Should you feel your TORO Product is defective and wish to rely on The Toro Promise, the following procedure is recommended:

1. Contact any Authorized TORO Service Dealer, TORO Master Service Dealer, or TORO Distributor (the Yellow Pages of your telephone directory is a good reference source).
2. He will either instruct you to return the product to him or recommend another Authorized TORO Service outlet which might be more convenient.
3. Bring the product along with your original sales slip, or other evidence of purchase date, to the service dealer.
4. The servicing dealer will inspect the unit, advise you whether the product is defective and, if so, make all repairs necessary to correct the defect without extra charge to you.

If for any reason you are dissatisfied with the dealer's analysis of the defect or the service performed, you may contact us.

Write:
TORO Consumer Service Department
8111 Lyndale Avenue South
Minneapolis, Minnesota 55420

The above remedy of product defects through repair by an Authorized TORO Service Dealer is the purchaser's sole remedy for any defect.

THERE IS NO OTHER EXPRESS WARRANTY. ALL IMPLIED WARRANTIES OF MERCHANTABILITY AND FITNESS FOR USE ARE LIMITED TO THE DURATION OF THE EXPRESS WARRANTY.

Some states do not allow limitations on how long an implied warranty lasts, so the above limitation may not apply to you.

This warranty applies only to parts or components which are defective and does not cover repairs necessary due to normal wear, misuse, accidents, or lack of proper maintenance. Regular, routine maintenance of the unit to keep it in proper operating condition is the responsibility of the owner.

All warranty repairs reimbursable under The Toro Promise must be performed by an Authorized TORO Service Dealer using Toro approved replacement parts.

Repairs or attempted repairs by anyone other than an Authorized TORO Service Account are not reimbursable under The Toro Promise. In addition, these unauthorized repair attempts may result in additional malfunctions, the correction of which is not covered by warranty.

THE TORO COMPANY IS NOT LIABLE FOR INDIRECT, INCIDENTAL OR CONSEQUENTIAL DAMAGES IN CONNECTION WITH THE USE OF THE PRODUCT INCLUDING ANY COST OR EXPENSE OF PROVIDING SUBSTITUTE EQUIPMENT OR SERVICE DURING PERIODS OF MALFUNCTION OR NON-USE.

Some states do not allow the exclusion or limitation of incidental or consequential damages, so the above limitation or exclusion may not apply to you.

This warranty gives you specific legal rights, and you may also have other rights which vary from state to state.

COUNTRIES OTHER THAN THE UNITED STATES OR CANADA

Customers who have purchased TORO products exported from the United States or Canada should contact their TORO Distributor (Dealer) to obtain guarantee policies for your country, province or state. If for any reason you are dissatisfied with your Distributor's service or have difficulty obtaining guarantee information, contact the TORO importer. If all other remedies fail, you may contact us at The Toro Company.

Compliance with Radio Interference Regulations Certified.
Certifie Conforme au Reglement sur le Brouillage Radioelectrique.

PRODUCT CHANGES

In an effort to make improvements available to TORO owners as quickly as possible, minor changes are incorporated into Toro's products from time to time that do not become immediately shown in the Parts Catalog. If such a change apparently has been made in your unit, which is not reflected in your manual, see your TORO Distributor or his Authorized TORO Service Dealer for information and part numbers.

IDENTIFICATION AND ORDERING

Model and Serial Numbers

The Power Blower has two identification numbers: a model number and a serial number. The two numbers are stamped on a plate which is located on the left side of the fan case. In any correspondence concerning the Power Blower, supply model and serial numbers to assure that correct information and replacement parts are obtained.

To order replacement parts from an Authorized TORO Distributor, supply the following information:

1. Model and serial number of the Power Blower.
2. Part number, description, and quantity of part(s) desired.

Note: Do not order by reference number if a parts catalog is being used; use the PART NUMBER.

Keep Your TORO All Toro Genuine TORO PARTS & ACCESSORIES ***Insist on Genuine Toro Parts***

MAINTENANCE RECORD

Litho in U.S.A.