Form No. 3324–624 Rev A

CCR™ Powerlite®

Snowthrower

Model No. 38172–200000001 and Up
Model No. 38182–200000001 and Up

Parts Catalog

Ordering Replacement Parts

To order replacement parts, please supply: the part number, the quantity, and the description of each part desired.

Understanding Reference Numbers

Each identified part in an illustration has a reference number. The reference number for a part also appears in the parts list, along with other information about the part.

This catalog uses two special reference number formats, one to indicate parts in a service assembly and another to indicate the quantity of a given part in an illustration.

Service Assembly Reference Numbers

Parts in service assemblies have reference numbers in the form **a:b.** The **a** represents the reference number of the entire service assembly and the **b** represents a sequential number unique to each part within the service assembly.

For example, a wheel assembly might be identified by reference number **6**, the tire by **6:1**, the valve by **6:2**, and the wheel by **6:3**. When you order the assembly identified by reference number 6, you receive all parts identified by reference numbers 6:1, 6:2, and 6:3. However, you may also order any part individually.

Reference numbers of this type appear in illustrations and in part lists.

Reference Numbers Indicating Quantity

In an illustration, if a reference number indicates more than one part, the reference number has the form **nX y.** The **n** represents the quantity of the part, the **X** is the multiplication symbol, and the **y** represents the reference number.

For example, in an illustration, the reference number **2X 37** means that two of the parts identified by reference number 37 are indicated.

© The TORO Company — 2000
All Rights Reserved

Contents

Description	Page
Impeller Drive Assembly	3
Housing, Upper Shroud, & Chute Assembly	4
Impeller Assembly	5
Engine, Side Plate, & Wheel Assembly	6
Motor & Switch Housing Assembly (Model No. 38182) (120 Volt)	7
Handle & Lower Shroud Assembly	8
Carburetor Assembly No. 640086 Tecumseh Model No. HSK635 Type 1723A	9
Engine Assembly Tecumseh Model No. HSK635–1723A	10
Engine Assembly Tecumseh Model No. HSK635–1723A	11
Recoil Starter Assembly No. 590743 Tecumseh Model No. HSK635 Type 1723A	12

Part Description Abbreviations

Part descriptions in this catalog may include the following abbreviations.

Abbreviation	Meaning
AR	as required
ASM	assembly
CARR	carriage
DEG	degrees
FH	flat head
GA	gauge
HF	hex flange
HH	hex head
HHF	hex head flange
HLH	hex lag head
HJ	hex jam
HOC	height-of-cut
HS	hex socket
HSBH	hex socket button head
HSFH	hex socket flat head
HSH	hex socket head
HWH	hex washer head
HWHTF	hex washer head thread forming
INC	incorporated
LH	left hand
NI	nylon insert
PPH	Phillips pan head
PTH	Phillips truss head
PTO	power take off
RH	right hand
SFH	slotted fillister head
SHH	slotted hex head
SQH	square head
SHWH	slotted hex washer head
SPH	slotted pan head
SRH	slotted round head
STD	standard
TAP	self tapping
TTH	Torx truss head
WH	wing head

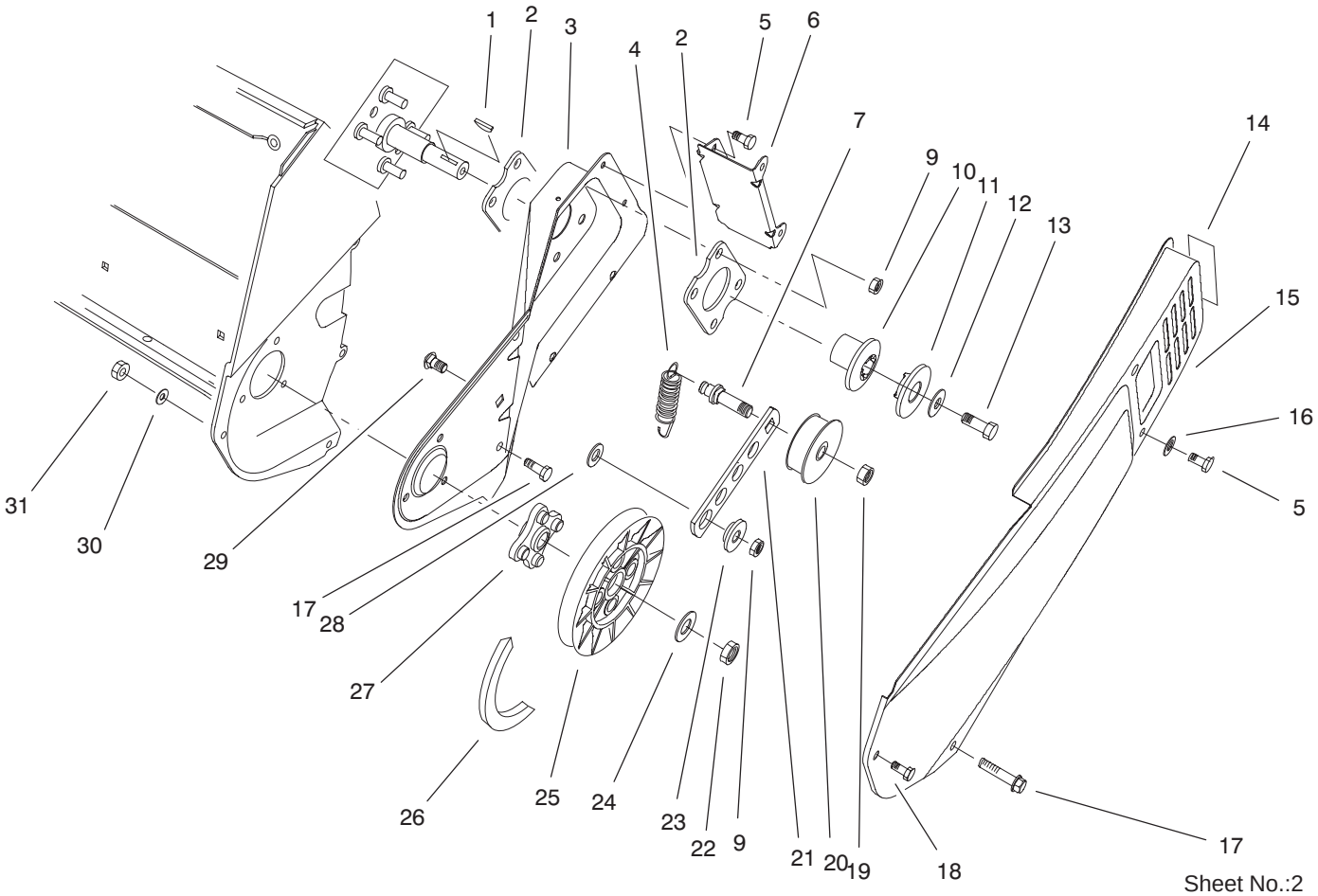

Sheet No.:2

Impeller Drive Assembly

Ref. No.	Part No.	Qty.	Description
1	3257–3	1	Key–Woodruff
2	71–5290–03	2	Plate–Engine
3	95–7945–03	1	Sideplate–LH
4	75–9020	1	Spring–Extension
5	32144–4	4	Screw–HH
6	75–8870–03	1	Bracket–Belt Cover
7	75–8720	1	Pin–Idler
9	3296–29	5	Nut–Lock, NI
10	71–5050	1	Hub – Half Sheave
11	71–5060	1	Cap – Half Sheave
12	3256–71	1	Washer–Flat
13	3235–6	1	Screw–Hex Hd
14	104–2767	1	Decal–Hot Surface
15	75–8830–03	1	Cover–Belt
16	3256–1	2	Washer–Flat
17	46–8094	3	Screw–Plastite
18	32105–23	1	Screw
19	3296–59	1	Nut–Lock, NI
20	71–5260	1	Pulley–Idler
21	75–9050	1	Arm–Idler
22	3296–38	1	Nut–Lock NI
23	75–8700	1	Bushing–Idler
24	3256–25	1	Washer–Flat
25	75–8750	1	Pulley–Driven
26	75–9010	1	V–Belt
27	75–8740	1	Hub

Ref. No.	Part No.	Qty.	Description
28	25–5640	1	Washer
29	3230–23	1	Screw–CARR
30	3256–14	1	Washer–Flat
31	3296–2	1	Nut–Lock

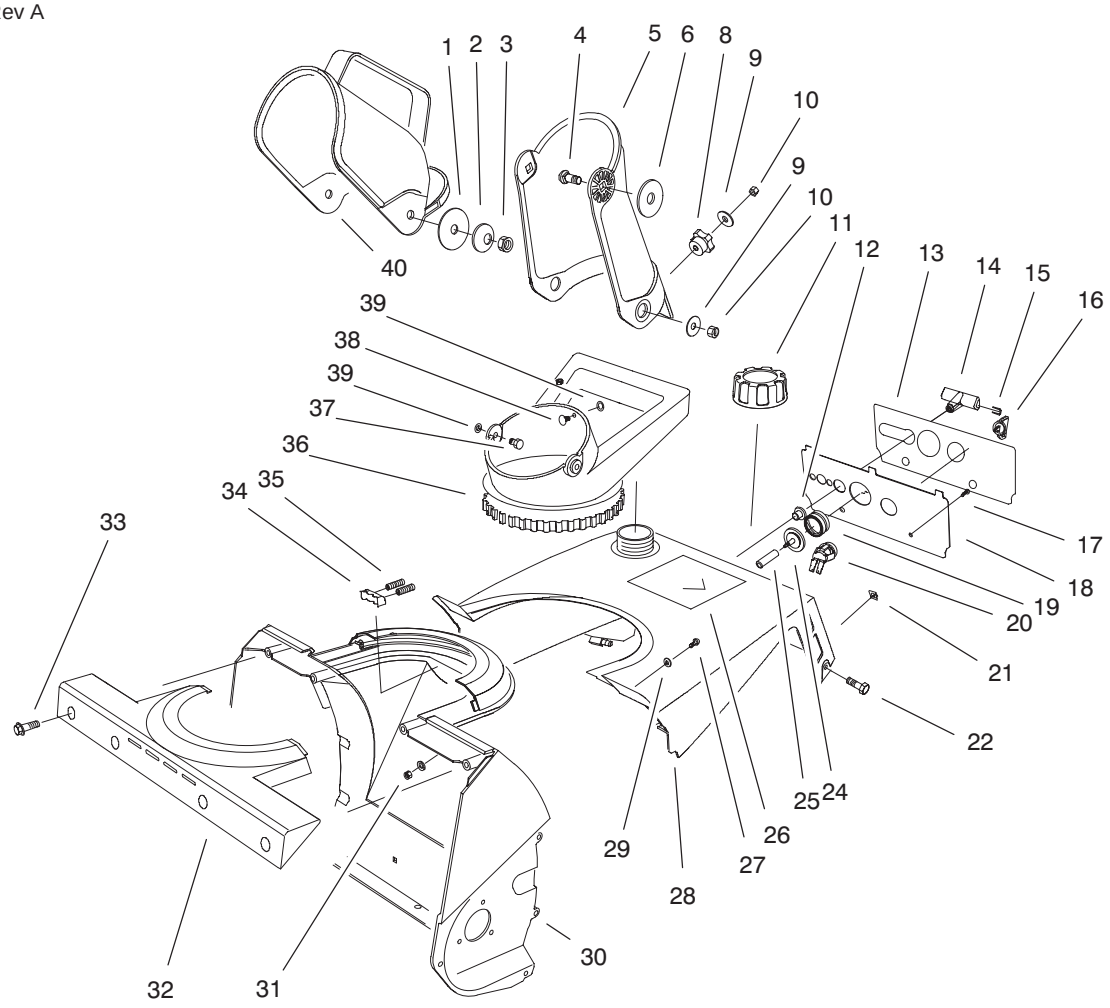

Sheet No.:4

Housing, Upper Shroud, & Chute Assembly

Ref. No.	Part No.	Qty.	Description
1	3256–68	2	Washer–Flat
2	3290–340	2	Washer–Belleville
3	3296–29	2	Nut–Lock, NI
4	3230–2	2	Screw–CARR
5	104–2764	1	Chute
6	95–1905	2	Washer–Rubber
8	233–67	1	Knob–Chute
9	3256–81	2	Washer–Flat
10	3296–56	2	Nut–Lock, NI
11	55–3573	1	ASM–Gas Cap
12	23–7470	1	Guide–Starter Rope
13	104–2766	1	Decal–Control Panel (only on: 38182)
13	104–2765	1	Decal–Control Panel (only on: 38172)
14	92–4853	1	Handle–Starter
16	63–8360	1	Key–Ignition
17	32144–53	2	Screw–Self TAP
18	75–9031–03	1	Panel–Control (only on: 38172)
18	75–9030–03	1	Panel–Control (only on: 38182)
19	66–7460	1	Bulb–Primer
20	40–5940	1	Switch–On/Off
21	49–1490	2	Nut

Ref. No.	Part No.	Qty.	Description
22	32144–89	2	Screw–Thread Forming
24	44–2750	1	Body–Primer
25	44–3173	1	Hose–Primer
26	99–9331	1	Decal – Powerlite Rec.3.25 HP (only on: 38172)
26	99–9332	1	Decal – Powerlite Rec. Ele 3.25 HP (only on: 38182)
27	3250–32	2	Screw–PPH
28	75–8800	1	Shroud–Tank Assembly
29	3256–1	4	Washer–Flat
30	75–8660	1	Housing
31	3296–42	2	Nut–Lock
32	75–8650	1	Retainer–Chute
33	46–8094	4	Screw–Plastite
34	75–9160	1	Detent–Chute
35	75–9170	2	Spring–Compression
36	75–8670	1	Handle–Chute
37	321–3	2	Screw–HH
38	3229–11	1	Screw–CARR
39	32115–15	3	Pushnut–Bolt Retainer
40	75–8770	1	Deflector–Chute

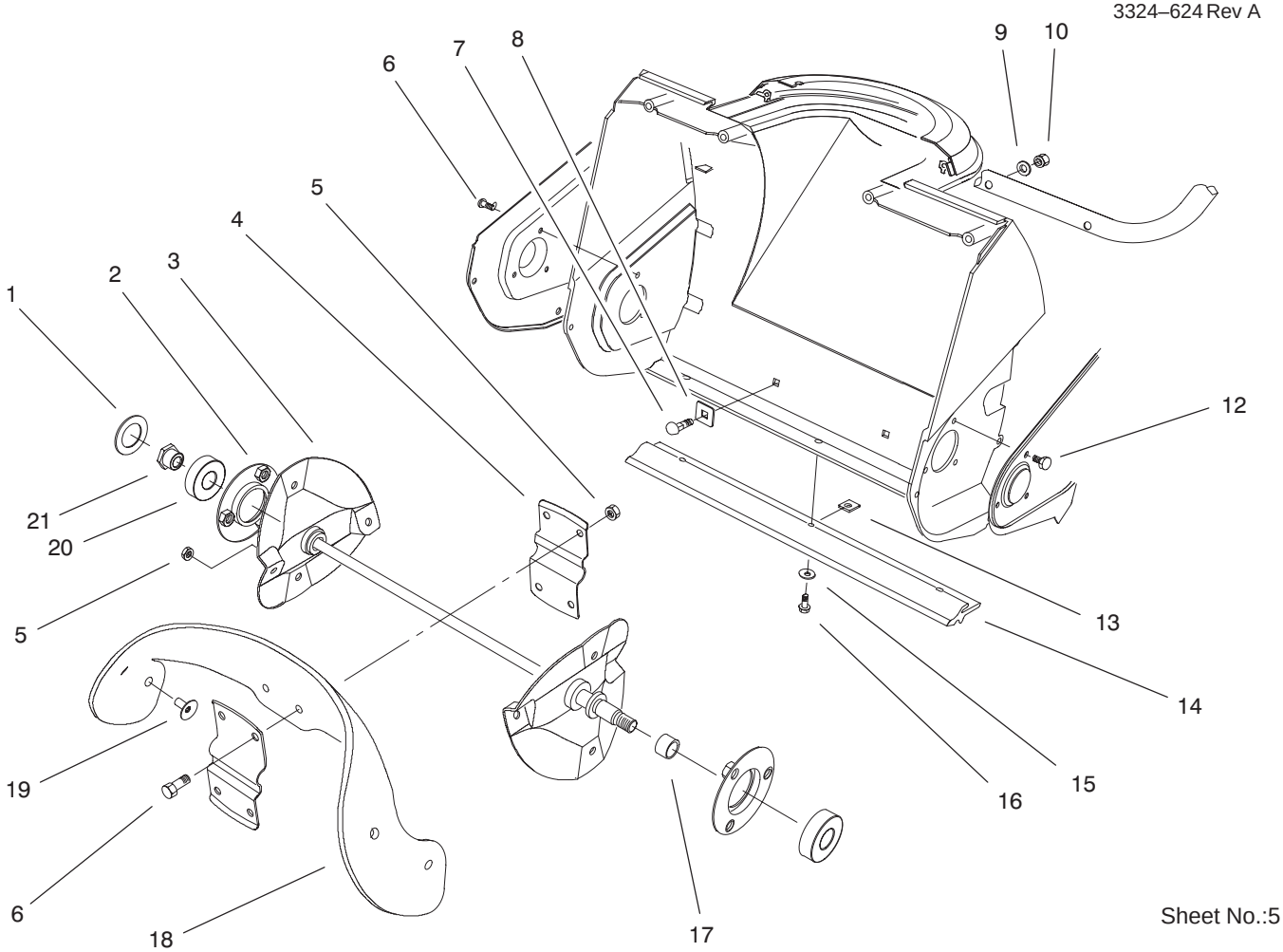

Sheet No.:5

Impeller Assembly

Ref. No.	Part No.	Qty.	Description
1	75–9180	1	Washer–Rubber
2	75–9080–03	2	Flange Bearing Wa
3	75–8840–03	1	Rotor Shaft Wa
4	75–8880–03	2	Support–Rotor
5	3296–56	12	Nut–Lock, NI
6	3234–33	7	Screw–HHF
7	3229–5	2	Screw–CARR
8	75–9040	2	Washer–Square
9	3–7501	2	Washer
10	3296–42	2	Nut–Lock
12	321–3	3	Screw–HH
13	32115–19	3	Nut–”u” Type Speed
14	75–8780	1	Scraper
15	3256–14	3	Washer–Flat
16	32144–34	3	Screw–Forming, Thread
17	75–8710	1	Spacer
18	84–1980	2	Blade–Rotor (Powerlite)
19	84–1970	8	Screw–C’sunk Oval
20	38–7820	2	Bearing–Ball
21	75–8690	1	Nut

Ref. No.	Part No.	Qty.	Description

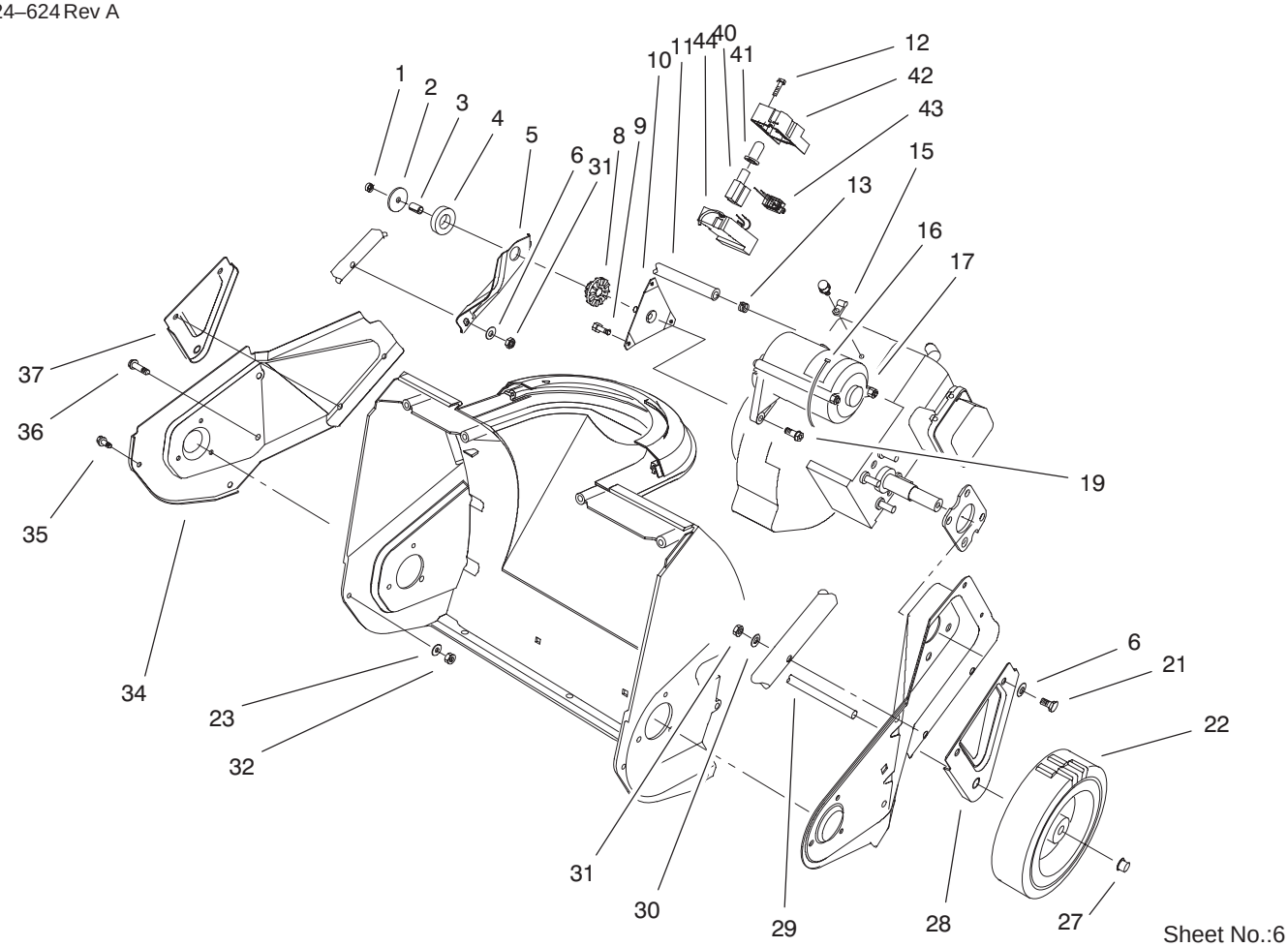

Sheet No.:6

Engine, Side Plate, & Wheel Assembly

Ref. No.	Part No.	Qty.	Description
1	3296–56	1	Nut–Lock, NI
2	3256–58	1	Washer–Flat
3	80–0650	1	Spacer–Tubular
4	95–1903	1	Ring – Isolator
5	75–8980–03	1	Brkt–Engine Support
6	3256–1	6	Washer–Flat
8	75–9100	1	Bushing–Isolator
9	94–2789	3	Screw
10	92–6012	1	Bracket/Stud ASM
11	49–2483	1	Line–Gas
12	32144–27	3	Screw–Plastite (only on: 38182)
13	2412–98	2	Clamp
15	2412–91	1	Clamp (only on: 38182)
16	250–7	1	Tie–Cable (only on: 38182)
17	77–0402	1	Starter Motor ASM [120 Volt] (only on: 38182)
19	80–0700	2	Screw – Mtg Torx (only on: 38182)
21	321–10	4	Screw–HH
22	23–3250	2	Wheel
23	3256–14	1	Washer–Flat
27	3290–320	2	Retainer–Push On

Ref. No.	Part No.	Qty.	Description
28	75–8910–03	1	Bracket–Wheel, LH
29	27–0062	1	Axle
30	3–7501	2	Washer
31	3296–42	4	Nut–Lock
32	3296–2	1	Nut–Lock
34	75–8820–03	1	Plate–RH Side
35	32105–23	1	Screw
36	46–8094	3	Screw–Plastite
37	75–8900–03	1	Bracket–Wheel, RH
40	36–8340	1	Switch–Starter (only on: 38182)
41	36–8350	1	Boot–Switch (only on: 38182)
42	100–3442	1	Switch–Cap Housing (only on: 38182)
43	94–9933	1	Plug–Power (only on: 38182)
44	100–3441	1	Switch–Base Housing (only on: 38182)
*99	28–9170	1	Cord (only on: 38182)

* Not illustrated

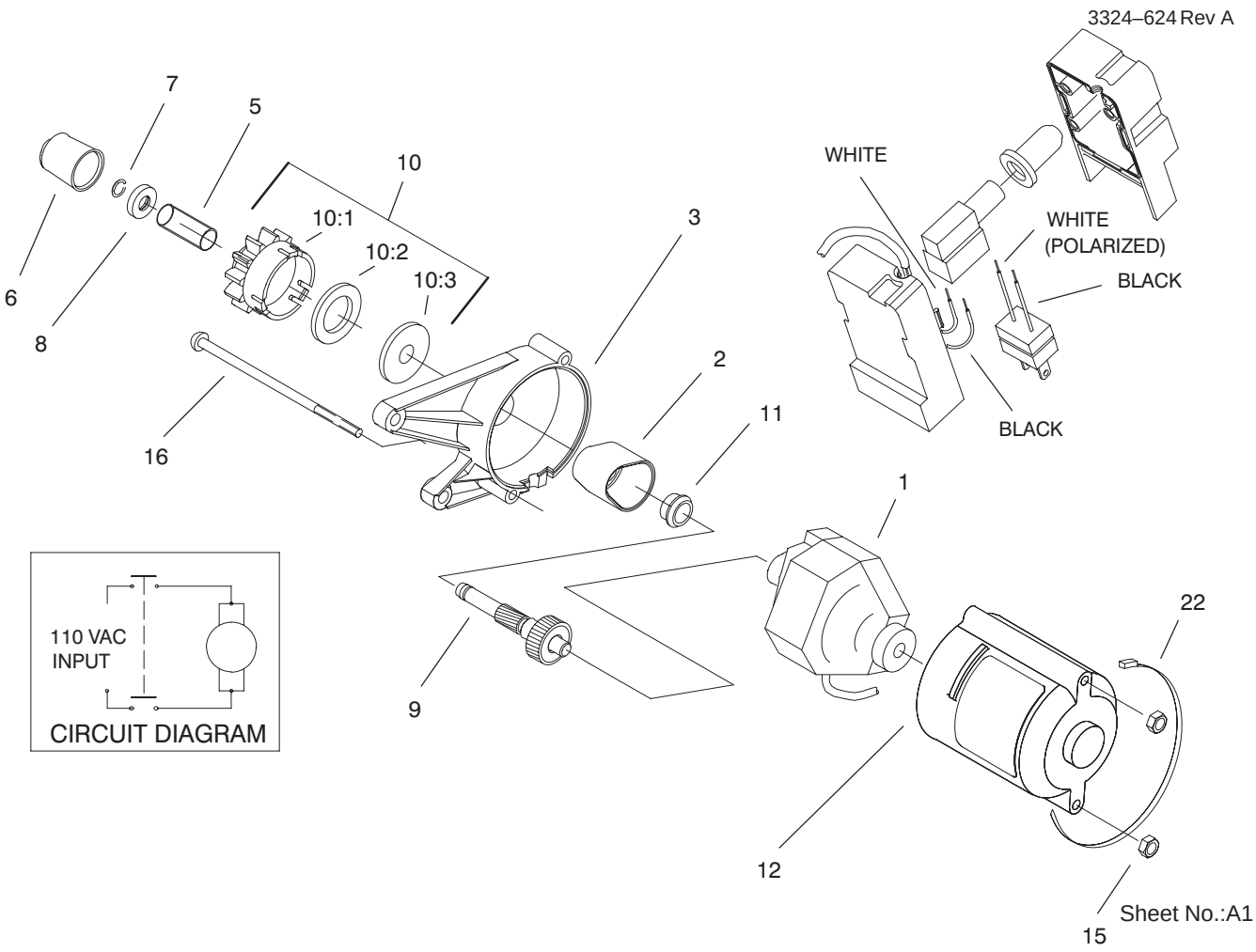

Motor & Switch Housing Assembly (Model No. 38182) (120 Volt)

Ref. No.	Part No.	Qty.	Description
1	70–7802	1	Starter Motor Assembly (only on: 38182)
2	70–7850	1	Cover–Gear (only on: 38182)
3	100–3443	1	Housing–Upper Starter (only on: 38182)
5	61–4690	1	Spring (only on: 38182)
6	70–7890	1	Pinion–Cap (only on: 38182)
7	61–4680	1	Ring–Lock (only on: 38182)
8	100–2902	1	Stop–Pinion (only on: 38182)
9	95–1797	1	Shaft/Gear Ay X (only on: 38182)
10	84–5240	1	Pinion ASM (R & S) (only on: 38182)
10:1	70–7790	1	Nut (only on: 38182)
10:2	84–5230	1	Pinion (only on: 38182)

Ref. No.	Part No.	Qty.	Description
10:3	84–5440	1	Ring – Rubber (only on: 38182)
11	70–7900	1	Bushing (only on: 38182)
12	100–3444	1	Housing–Lower Starter (only on: 38182)
15	3296–2	2	Nut–Lock (only on: 38182)
16	32144–101	2	Screw–Mach (only on: 38182)
22	250–7	1	Tie–Cable (only on: 38182)

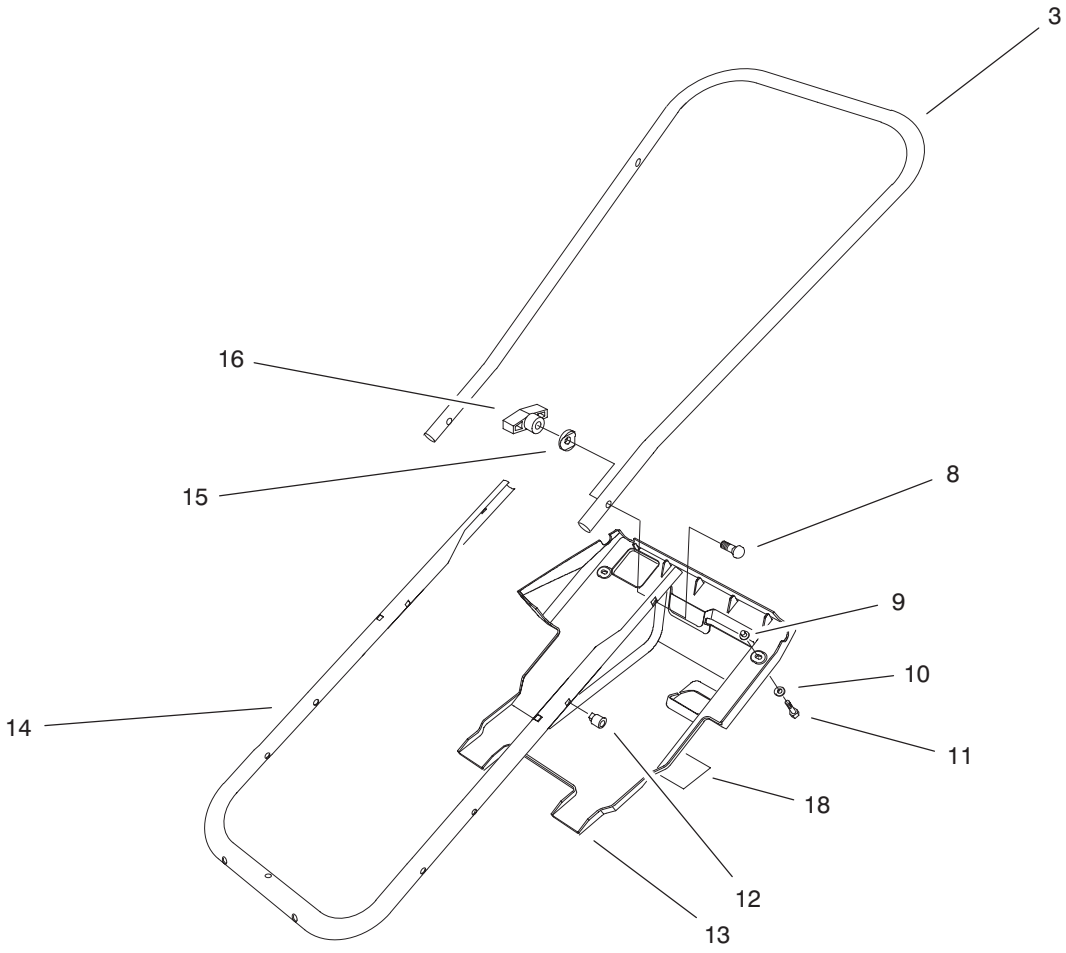

Sheet No.:7

Handle & Lower Shroud Assembly

Ref. No.	Part No.	Qty.	Description
3	75–9070–03	1	Handle–Upper
8	17–9426	2	Screw–Handle
9	605120	2	Grommet
10	3256–14	2	Washer–Flat
11	32144–34	2	Screw–Forming, Thread
12	32115–17	2	Nut–Expansion
13	75–8790	1	Shroud
14	75–9060–03	1	Tube–Frame
15	75–9130	2	Washer–Curved
16	98–7134	2	Knob–Handle
18	61–4790	1	Decal (only on: 38182)

Ref. No.	Part No.	Qty.	Description

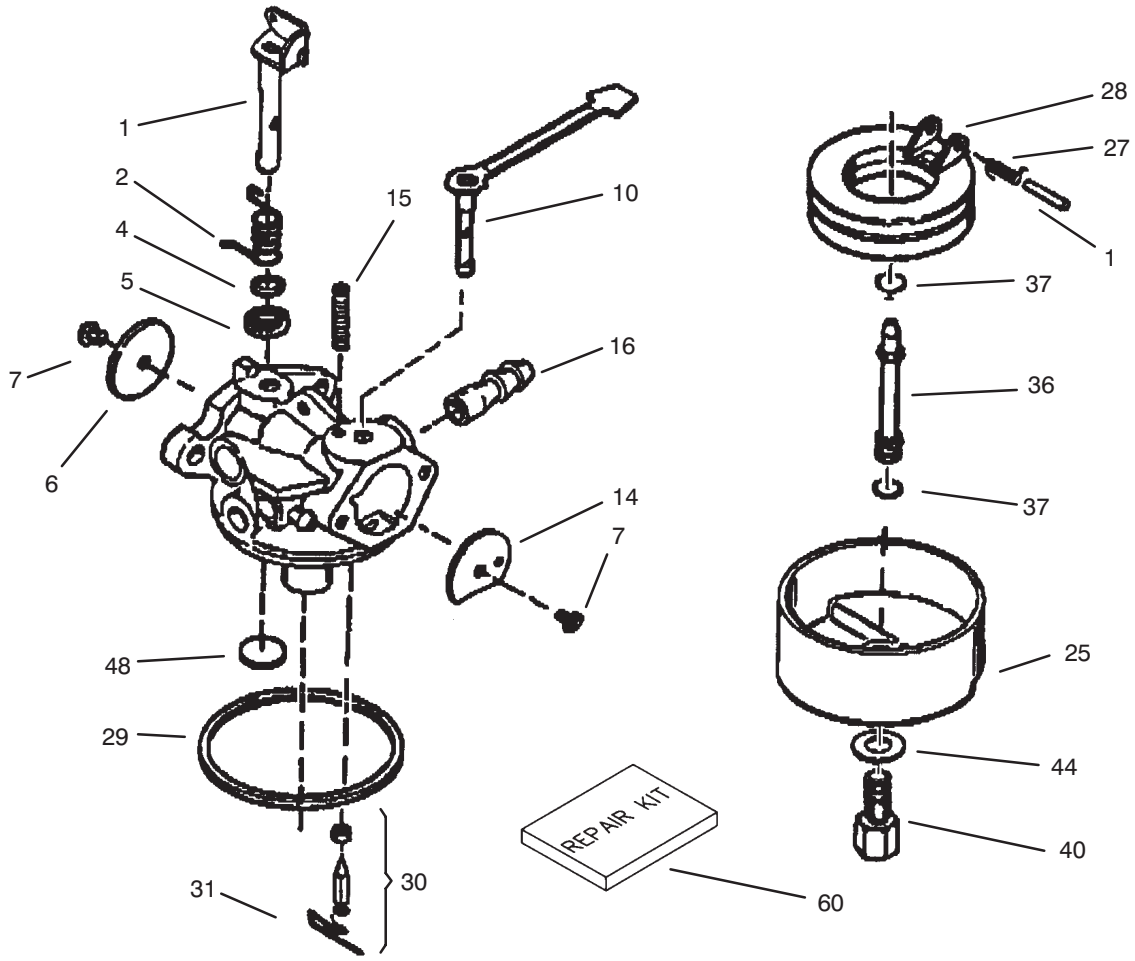

Sheet No.:

Carburetor Assembly No. 640086
Tecumseh Model No. HSK635 Type 1723A

Ref. No.	Part No.	Qty.	Description
1	632166A	1	Throttle Shaft & Lever Assy.
2	632169	1	Spring – Throttle Return
4	631184	1	Washer – Steel
5	631183	1	Washer – Felt
6	631621	1	Shutter – Throttle
7	650506	2	Screw – Shutter
10	632553	1	Choke Shaft & Lever Assy.
14	631815	1	Shutter – Choke
15	630735	1	Spring – Choke Positioning
16	632164	1	Fitting – Fuel Inlet
25	631867	1	Bowl – Float
26	632386	1	Spring – Float Shaft
27	631024	1	Shaft – Float
28	632019	1	Float – Carburetor
29	631028	1	Seal – O–Ring
30	631021	1	Inlet Needle, Seat & Clip (Incl. ref. #31)
31	631022	1	Clip – Spring
36	640080	1	Nozzle – Main

Ref. No.	Part No.	Qty.	Description
37	632547	2	O–Ring
40	640087	1	Nut – Float Bowl
44	27110A	1	Washer – Bowl
48	631027	1	Plug – Welch
60	632760	1	Repair Kit

Obtain Parts from Tecumseh

Engine Assembly Tecumseh Model No. HSK635–1723A

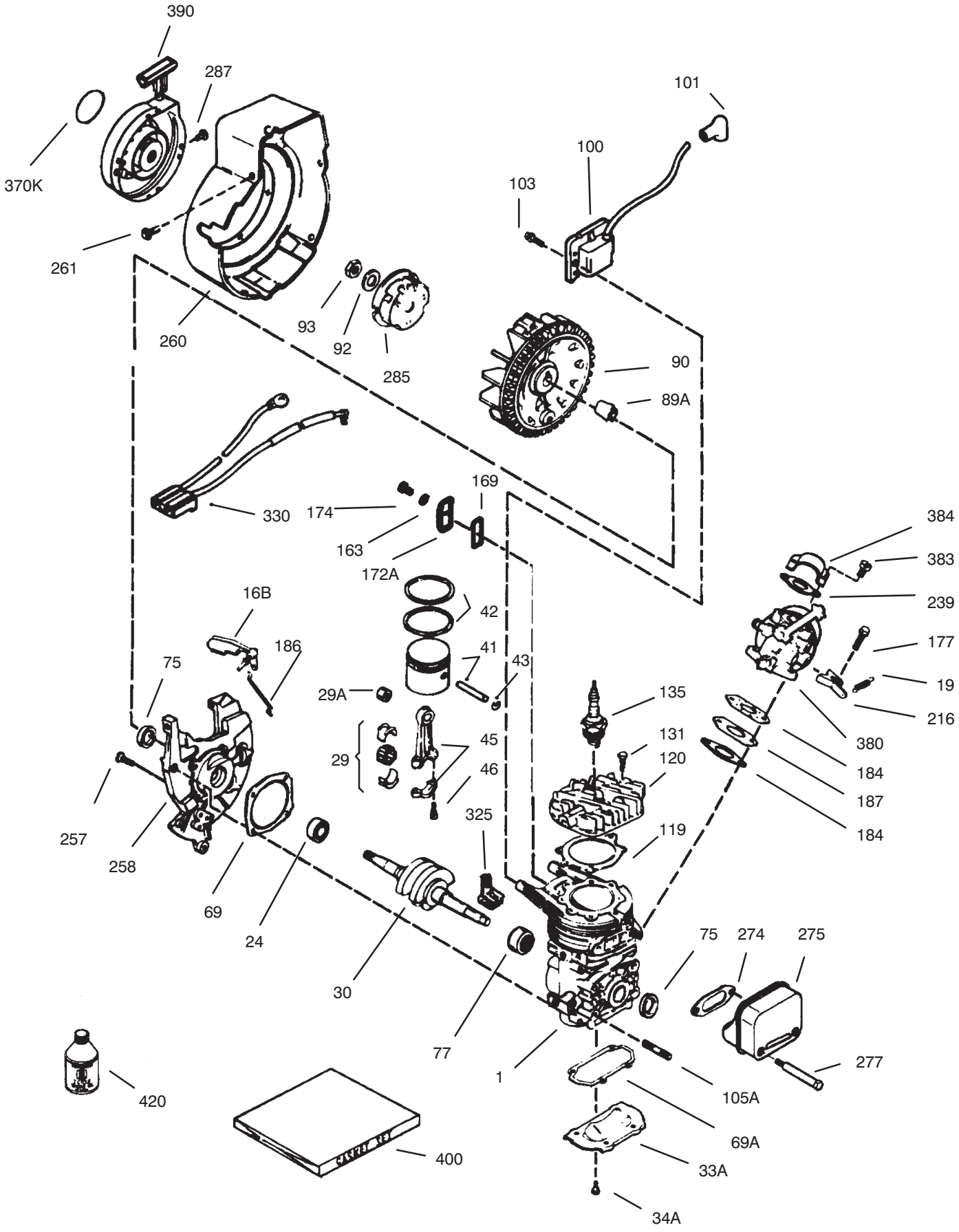

Sheet No.:

Engine Assembly
Tecumseh Model No. HSK635–1723A

Ref. No.	Part No.	Qty.	Description
1		1	Block Ass'y – Cylinder (Order short block if replacement is required)
16B	490291A	1	Vane Ass'y – Air
19	570707	1	Spring – Governor
24	530110	1	Bearing – Ball
29	530150	1	Bearing & Liner Set – Needle (37 Needles)
29A	530104A	1	Bearing – Cartridge
30	290602	1	Crankshaft
33A	570644	1	Plate – Cover
3A4	650579	4	Screw – Pan Flex Hd.
41	310283A	1	Piston & Pin Ass'y (Incl. ref. #43)
42	310289	1	Ring Set – Piston
43	310167	2	Ring – Piston Pin Retaining
45	310235B	1	Rod Ass'y – Connecting (Incl. ref. #29, 29A & 46)
46	650633	2	Screw – Connecting Rod
69*	510292A	1	Gasket – Cylinder Cover
69A*	510323A	1	Gasket – Cover Plate
75	510319	2	Seal – Oil
77	530105	1	Bearing – Needle
89A	611032	1	Sleeve – Flywheel
90	611066	1	Flywheel
92	650815	1	Washer – Belleville
93	650390	1	Nut – Flywheel
100	34443B	1	Solid State Ass'y (Incl. Ref. #101)
101	610118	1	Cover – Spark Plug
103	651007	2	Screw – Hex. Hd. Sems
105A	650796	4	Stud – Cylinder
119	*510274A	1	Gasket – Cylinder Head
120	250240B	1	Head – Cylinder
131	650477	5	Screw – Pan Flex Hd.
135	611049	1	Plug – Spark (RCJ–8Y or equivalent)
163	650838	1	Washer – Flat
169*	510325A	1	Gasket – Cover
172A	570708	1	Cover Ass'y – Compression Release
174	650579	1	Screw – Torx. Hd.
177	650959	2	Screw
184*	510326A	2	Gasket – Carburetor
186	490322	1	Link – Governor
187	570438A	1	Spacer
216	570645	1	Level – Adjusting
239	35815	1	Gasket – Filter Base
257	650911	4	Screw – Torx Pan Hd.
258	350422	1	Base Ass'y – Blower Housing (Incl ref. #27)
260	350437	1	Housing – Blower
261	650737	3	Screw – Hex. Washer Hd.
274*	510207A	1	Gasket – Exhaust
275	390332	1	Muffler (Incl. Ref. #274 & 277)
277	650869	2	Screw – Torx Pan Hd.
285	590551A	1	Cup – Starter
287	650926	3	Screw
325	29443	1	Clip – Spring
330	611131A	1	Harness – Wire
370K	36695	1	Decal – Starter
380	640086	1	Carburetor (Incl. ref. #184)
383	570434	1	Baffle – Air
384	650431	2	Screw – Pan Hd. Sems
390	590743	1	Starter Ass'y – Rewind
400	510324B	1	Gasket Set (Incl. Items Marked *)
422	730227B	1	Oil – 2 Cycle (8 oz.)

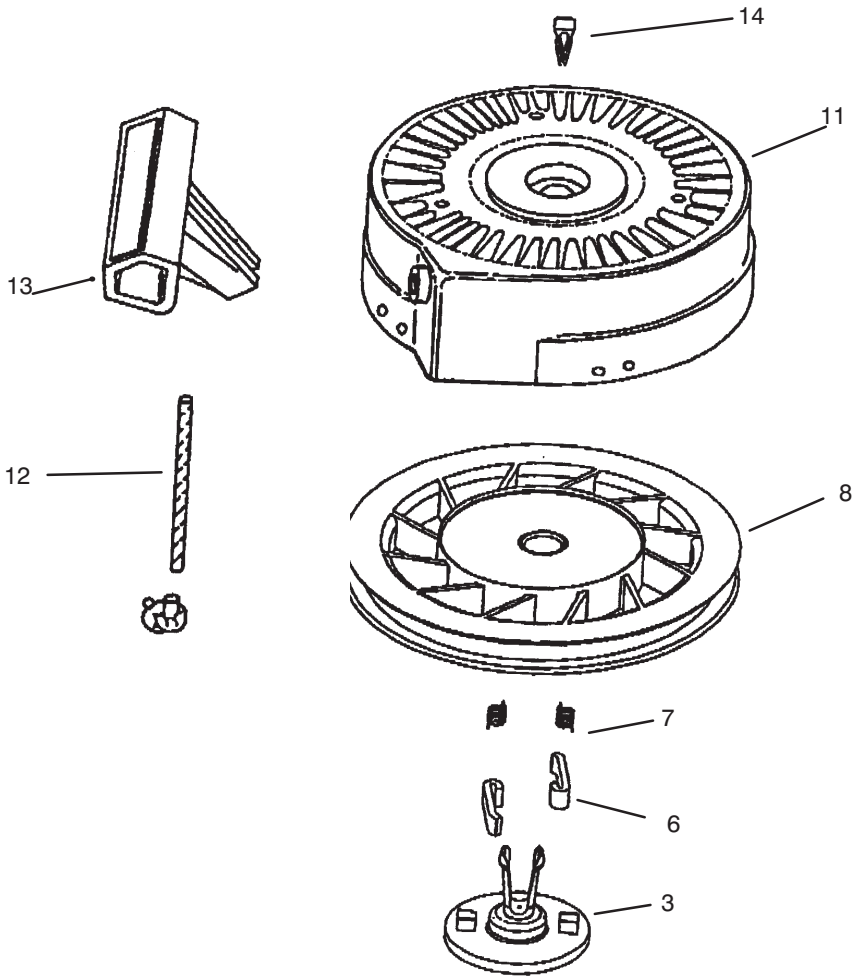

Sheet No.:

Recoil Starter Assembly No. 590743
Tecumseh Model No. HSK635 Type 1723A

Ref. No.	Part No.	Qty.	Description
3	590740	1	Retainer
6	590616	2	Dog – Starter
7	590617	2	Spring – Dog
8	590645A	1	Pulley & Rewind Spring Asm
11	590643	1	Starter Housing Assembly
12	590535	1	Rope – Starter
13	590701	1	Handle – Starter
14	590760	1	Spring Clip

Ref. No.	Part No.	Qty.	Description

Obtain Parts from Tecumseh

Maintenance Record

Date								

Maintenance Record

Date								

Maintenance Record

Date								


TORO®