FORM NO. 3311-924

TORO®

MODEL NO. 51255 - 2000001 & UP

PARTS CATALOG

TORO TRIMMER 1010

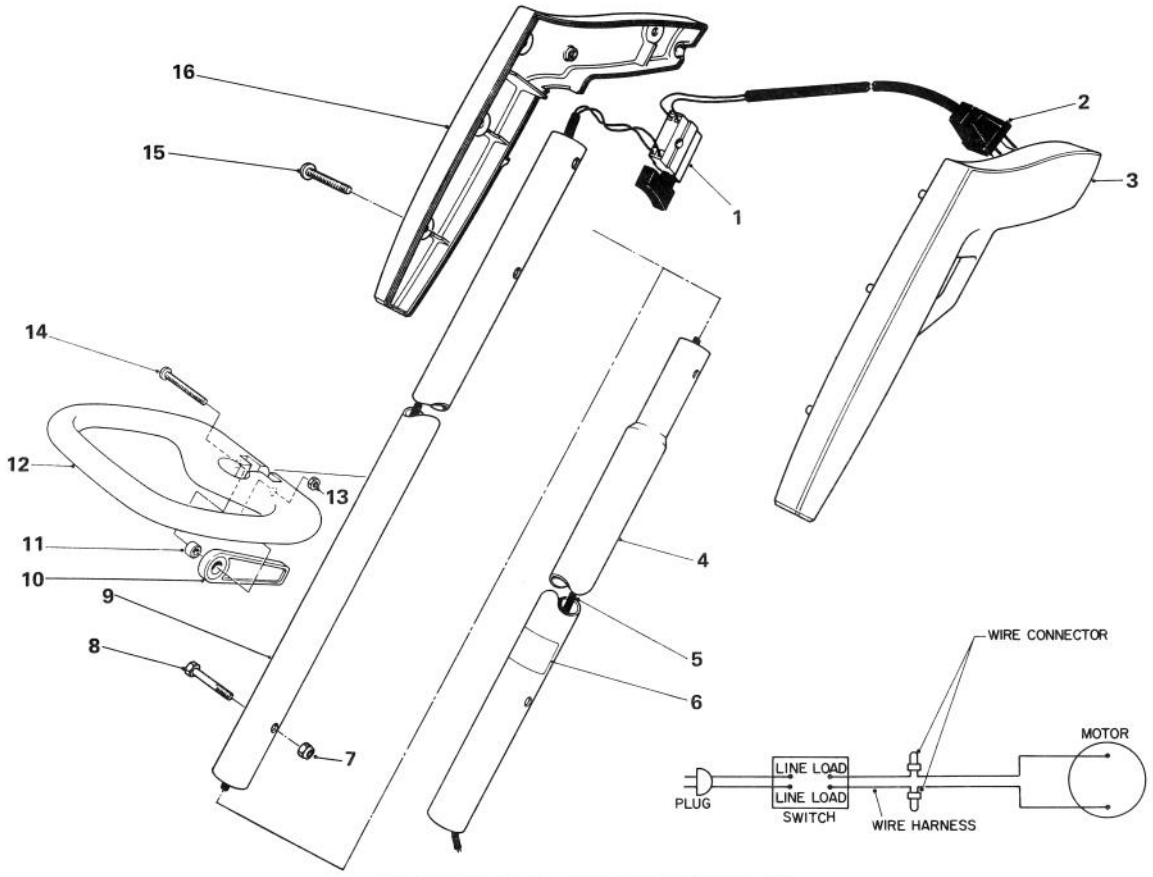

HANDLE ASSEMBLY

Ref. No.	Part No.	Description	No. Used
1	29-7660	Switch - Single Speed	1
2	33-8570	Plug - Pig Tail	1
3	33-8810	Grip, L.H.	1
4	34-5710	Tubing - Lower Extension	1
5	34-2570	Wire Harness	1
6	34-3550	Decal - Serial	1
7	3296-12	Locknut	1
8	33-8950	Hex. Hd. Machine Screw	1
9	34-4190	Tubing - Upper Extension	1

Ref. No.	Part No.	Description	No. Used
10	29-7680	Cam Adjustment Knob	1
11	29-7690	Spacer - Adjustment Knob	1
12	34-2600	Handle - Adjustable	1
13	3217-5	Hex. Nut	1
14	3250-11	Slotted Hd. Pan Screw	1
15	32104-121	Cross Recess Pan Head Thread Forming Screw	4
16	33-8820	Grip, R.H.	1

COPYRIGHT © ALL RIGHTS RESERVED
The Toro Company — 1982
MINNEAPOLIS, MN 55420 — U.S.A.

PRICE $1.00

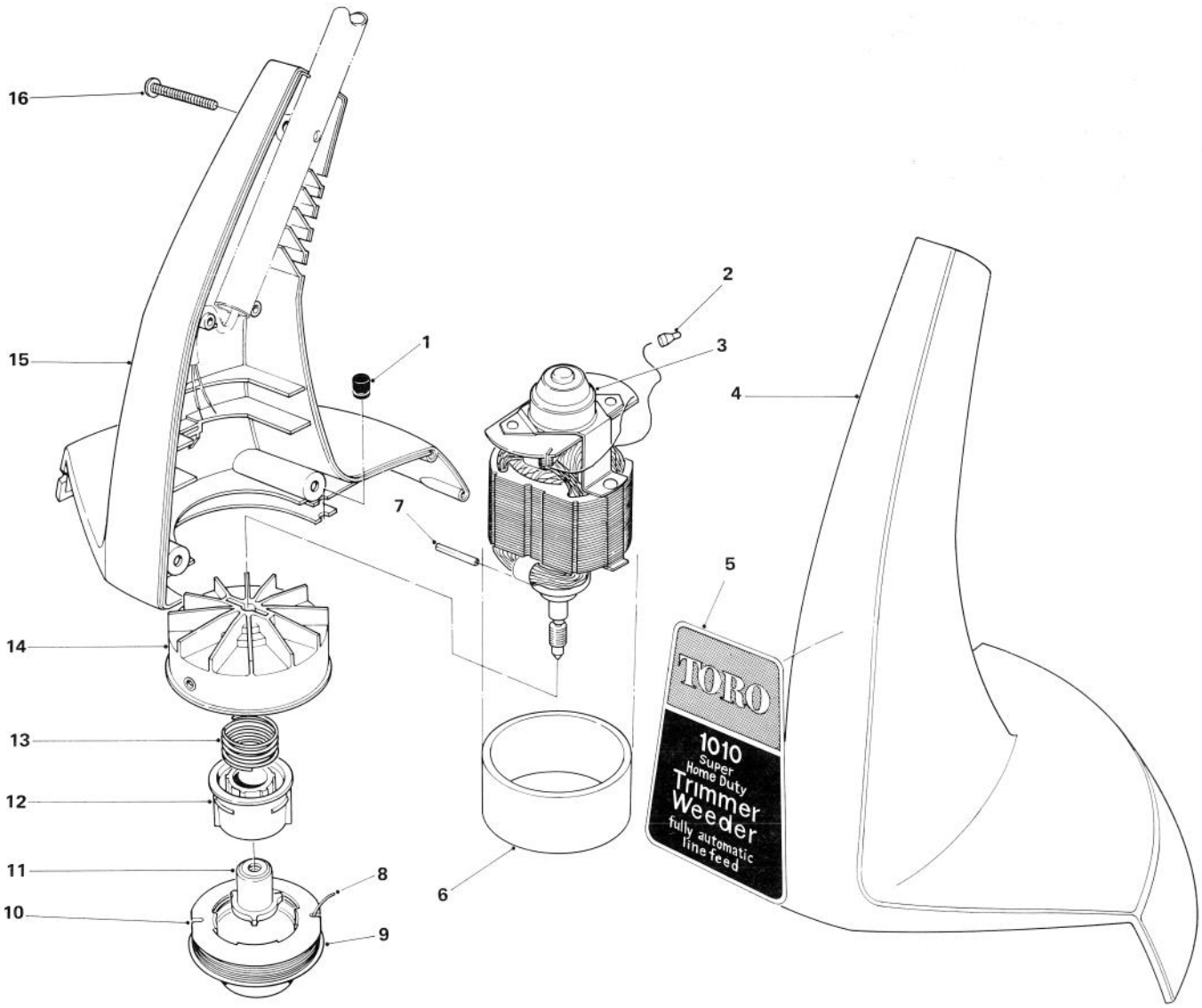

MOTOR AND HOUSING ASSEMBLY

Ref. No.	Part No.	Description	No. Used
1	33-8710	Grommet	1
2	218-496	Electrical Connector	2
3	34-2580	Motor	1
4	34-4390	Housing, L.H.	1
5	34-5740	Decal - Housing	1
6	34-4290	Dampening Sleeve	1
7	32121-88	Coil Pin	1
8	34-3880	Filament Line 30' (.050 Dia.)	1
9	44-5520	Spool Cap	1

Ref. No.	Part No.	Description	No. Used
10	34-3870	Prewound Spool Cap	1
11	34-9100	Driver - Detent	1
12	29-8120	Spool Core	1
13	29-8230	Spring - Compression	1
14	33-8680	Fan Hub Assembly	1
15	34-5730	Housing Assembly, R.H.	1
16	32104-121	Cross Recess Pan Hd. Thread Forming Screw	6
*	34-2690	Loose Parts	1

*Not illustrated