Form No. 3468-517 Rev A

TORO®

Count on it.

Parts Catalog

Z Master® Professional 5000 Series Riding Mower

with 60in TURBO FORCE® Side Discharge Mower

Model No. 72910—Serial No. 416303729 and Up

Register at www.Toro.com.
Original Instructions (EN)

3468-517 A

Ordering Replacement Parts

To order replacement parts, please supply the part number, the quantity, and the description of each part desired.

Understanding Reference Numbers

Each identified part in an illustration has a reference number. The reference number for a part also appears in the parts list, along with other information about the part.

This catalog uses two special reference number formats, one to indicate parts in a service assembly and another to indicate the quantity of a given part in an illustration.

Service Assembly Reference Numbers

Parts in service assemblies have reference numbers in the form a:b. The a represents the reference number of the entire service assembly and the b represents a sequential number unique to each part within the service assembly.

For example, a wheel assembly might be identified by reference number 6, the tire by 6:1, the valve by 6:2, and the wheel by 6:3. When you order the assembly identified by reference number 6, you receive all parts identified by reference numbers 6:1,6:2, and 6:3. However, you may also order any part individually. Reference numbers of this type appear in illustration and in parts lists.

Reference Numbers Indicating Quantity

In an illustration, if a reference number indicates more than one part, the reference number has the form nX y. The n represents the quantity of the part, the X is the multiplication symbol, and the y represents the reference number.

For example, in an illustration, the reference number 2X 37 means that two of the parts identified by reference number 37 are indicated.

Contents

Frame Assembly 4
Roll-Over Protection System Assembly No. 116-0231 6
Caster Fork and Wheel Assembly 8
Hydraulic Drive Assembly 10
Pump Idler Assembly No. 116-1255 12
LH Hydro Assembly No. 135-7903 14
RH Hydro Assembly No. 135-7904 16
Rear Wheel Assembly 18
Park Brake Assembly 20
Fuel System Assembly 22
Fuel Tank Assembly No. 135-0643 24
Seat Mounting Assembly 26
Seat Assembly No. 147-4984 28
Motion Control Assembly 30
Console Assembly 32
Electrical Assembly 34
Deck Lift Assembly 36
Height-of-Cut Assembly No. 109-7438 38
Engine, Clutch and Muffler Assembly 40
Deck Assembly 42
Deck Decal Assembly No. 140-1169 44
Rubber Deflector Assembly No. 108-2792 46
Idler Arm Assembly 48
Frame Decal Assembly 50
Attachments and Accessories 52

© 2024—The Toro® Company
8111 Lyndale Avenue South
Bloomington, MN 55420

Contact us at www.Toro.com.
Printed in the USA.
All Rights Reserved

Frame Assembly

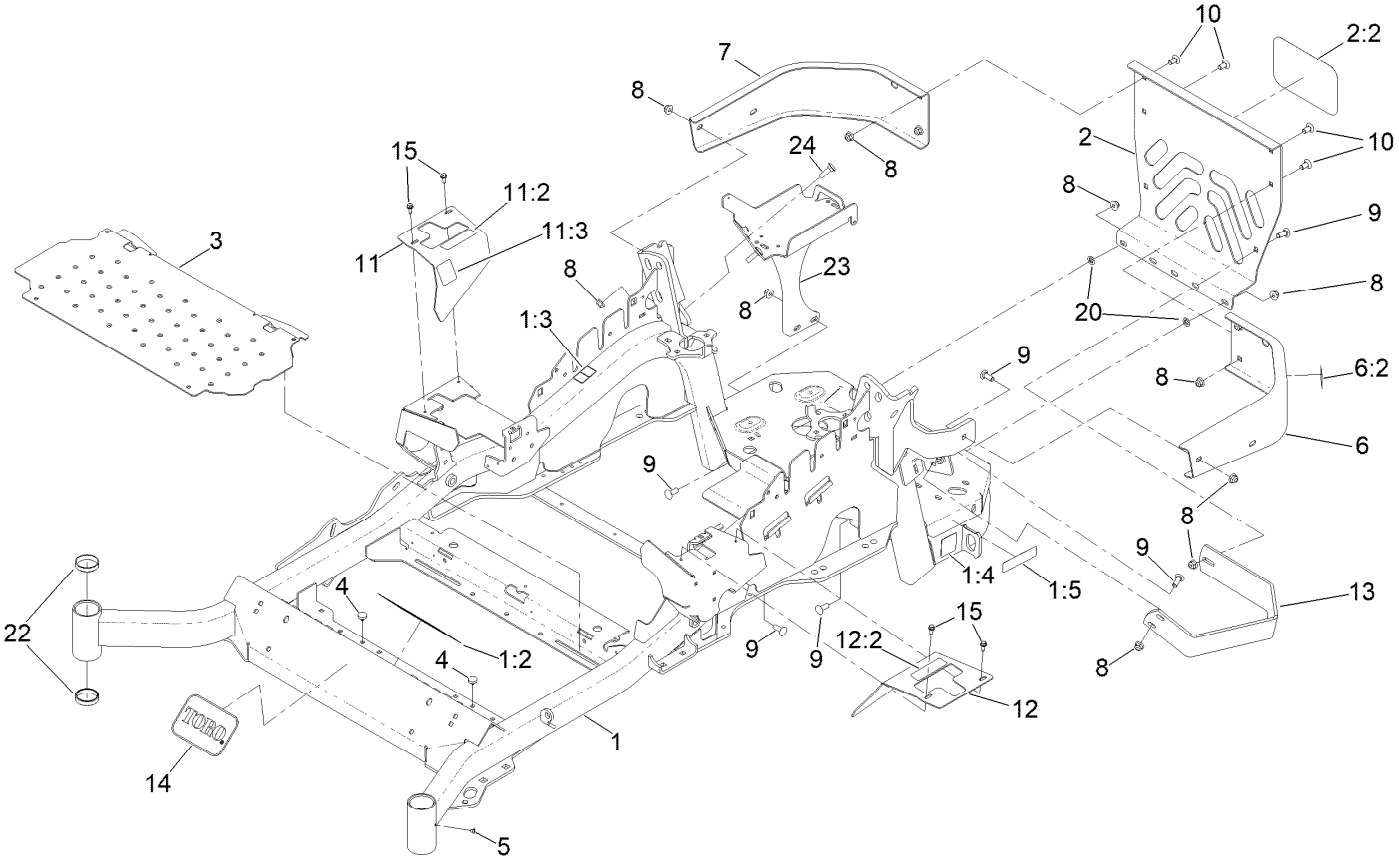

Frame Assembly (continued)

Ref.	Part Number	Qty.	Description
1	142-7265	1	Mainframe Service ASM - 60
1:2	132-0871	1	Decal-Danger
1:3	106-5517	2	Decal-Warning
1:4	106-2655	2	Decal-Hazard, Pinched Finger
1:5	133-8062	1	Decal-Spark Arrestor
2	115-7410	1	Rear Guard ASM
2:2	67-7320	1	Decal
3	116-8898-01	1	Floorpan
4	1-513658	2	Bumper
5	1-811010	2	Plug
6	116-0180	1	LH Bumper ASM
6:2	106-5517	1	Decal-Warning
7	116-0057-03	1	Bumper-RH
8	104-8301	15	Nut-HF, NI
9	3231-22	9	Screw-CARR
10	3231-21	4	Screw-CARR
11	116-5899	1	RH Motion Control Cover ASM
11:2	99-8936	1	Decal-Control, Motion
11:3	116-5988	1	Decal-Park Brake, CE
12	116-0580	1	LH Motion Control Cover ASM
12:2	99-8936	1	Decal-Control, Motion
13	126-2067-03	1	Guard-Muffler
14	68-3640	1	Decal
15	32144-10	4	Screw-HWH
20	107-3154	2	Nut-Push
22	1-543508	4	Cup-Bearing
23	142-6404-01	1	Battery Mount ASM [red]
24	3231-25	2	Bolt-CARR

Roll-Over Protection System Assembly No. 116-0231

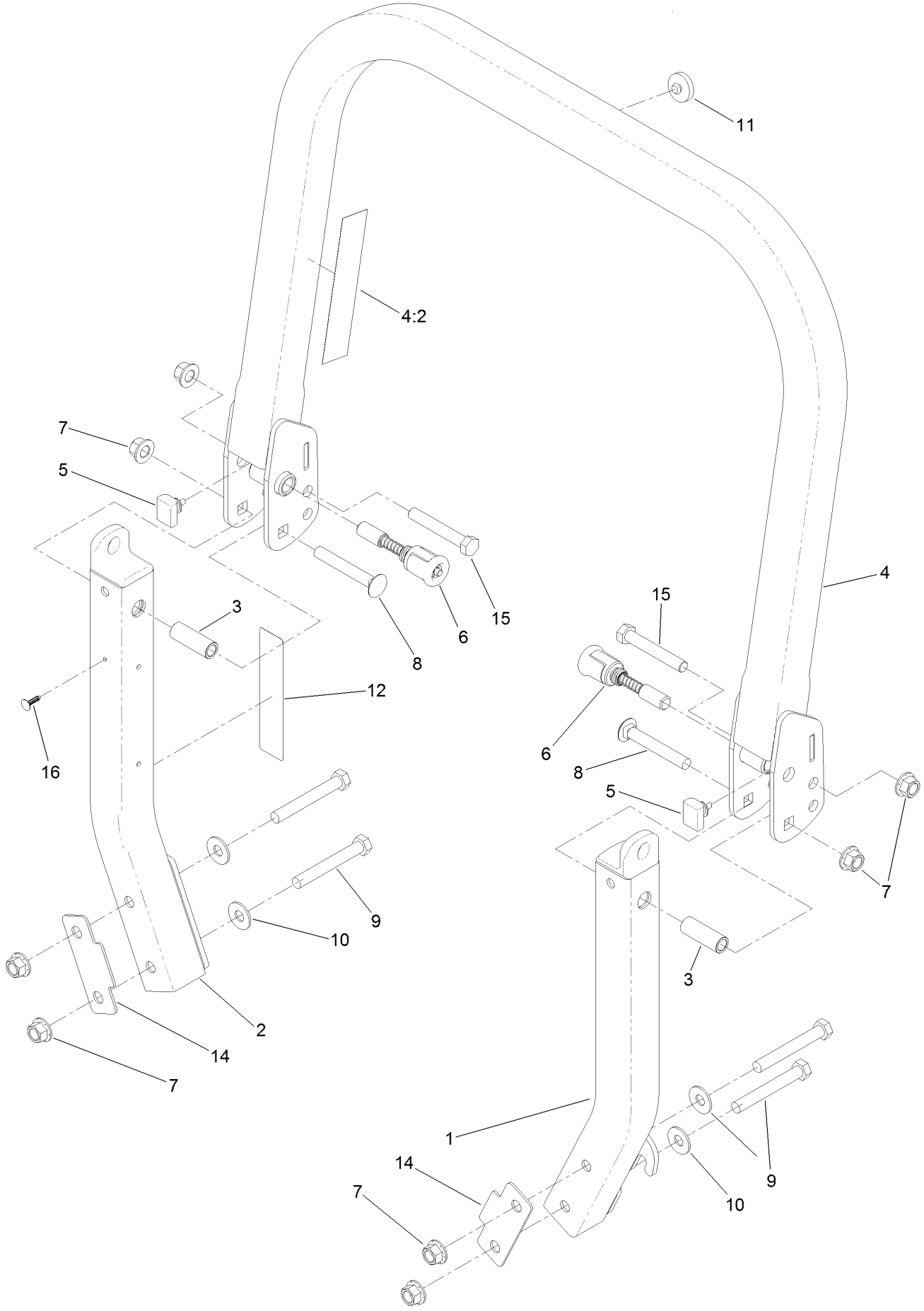

Roll-Over Protection System Assembly No. 116-0231 (continued)

Ref.	Part Number	Qty.	Description
1		1	Leg-ROPS, LH ●
2		1	Leg-ROPS, RH ●
3	109-6653	2	Spacer
4		1	Upper ROPS ASM ●
4:2	107-3069	1	Decal-Warning
5	109-5337	2	Bumper-ROPS
6	116-0104	2	Pin-Spring
7	99-5107	8	Nut-Lock
8	3233-10	2	Screw-CARR
9	325-35	4	Screw-HH
10	109-9505	4	Washer-Spring
11	109-9233	1	Bumper-Push-In, Rubber
12	117-0346	1	Decal-Caution, Fuel Vent
14	116-0960	2	Spacer
15	325-13	2	Screw-HH
16	125-8067	1	Plug-Plastic

● Not serviced separately

Caster Fork and Wheel Assembly

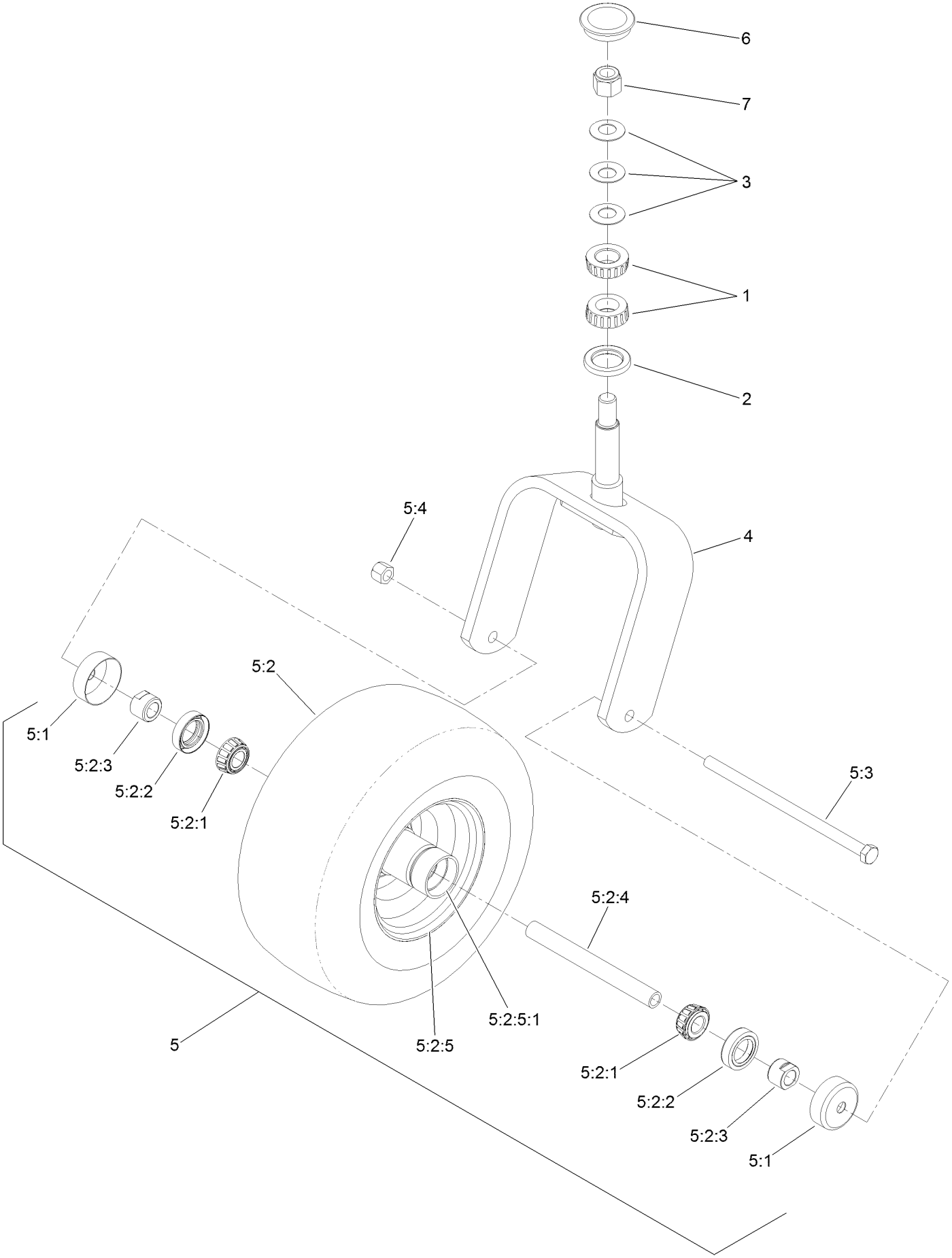

Caster Fork and Wheel Assembly (continued)

Ref.	Part Number	Qty.	Description
1	1-543509	2	Bearing-Roller, Tapered
2	116-5647	1	Seal-Grease
3	1-633508	3	Washer-Bellville
4	116-6707-01	1	Caster
5	127-9528	1	Wheel And Axle ASM
5:1	103-2768	2	Guard-Seal
5:2		1	Wheel And Bearing ASM ●
5:2:1	1-633585	2	Bearing-Cone, Taper
5:2:2	103-0063	2	Seal-Caster
5:2:3	103-3051	1	Spacer-Nut ■
5:2:4	126-5361	1	Axle Caster ASM
5:2:5		1	Wheel And Tire ASM ●
5:2:5:1	1-633584	2	Bearing-Cup
5:3	325-39	1	Screw-HH
5:4	3296-23	1	Nut-Lock, NI
6	103-4882	1	Cap-Grease
7	3296-51	1	Nut-Lock, NI

● Not serviced separately
■ Use Pro-Lock, Nut Type (P/N 1-840022, .5ml tube) on threads.

Hydraulic Drive Assembly

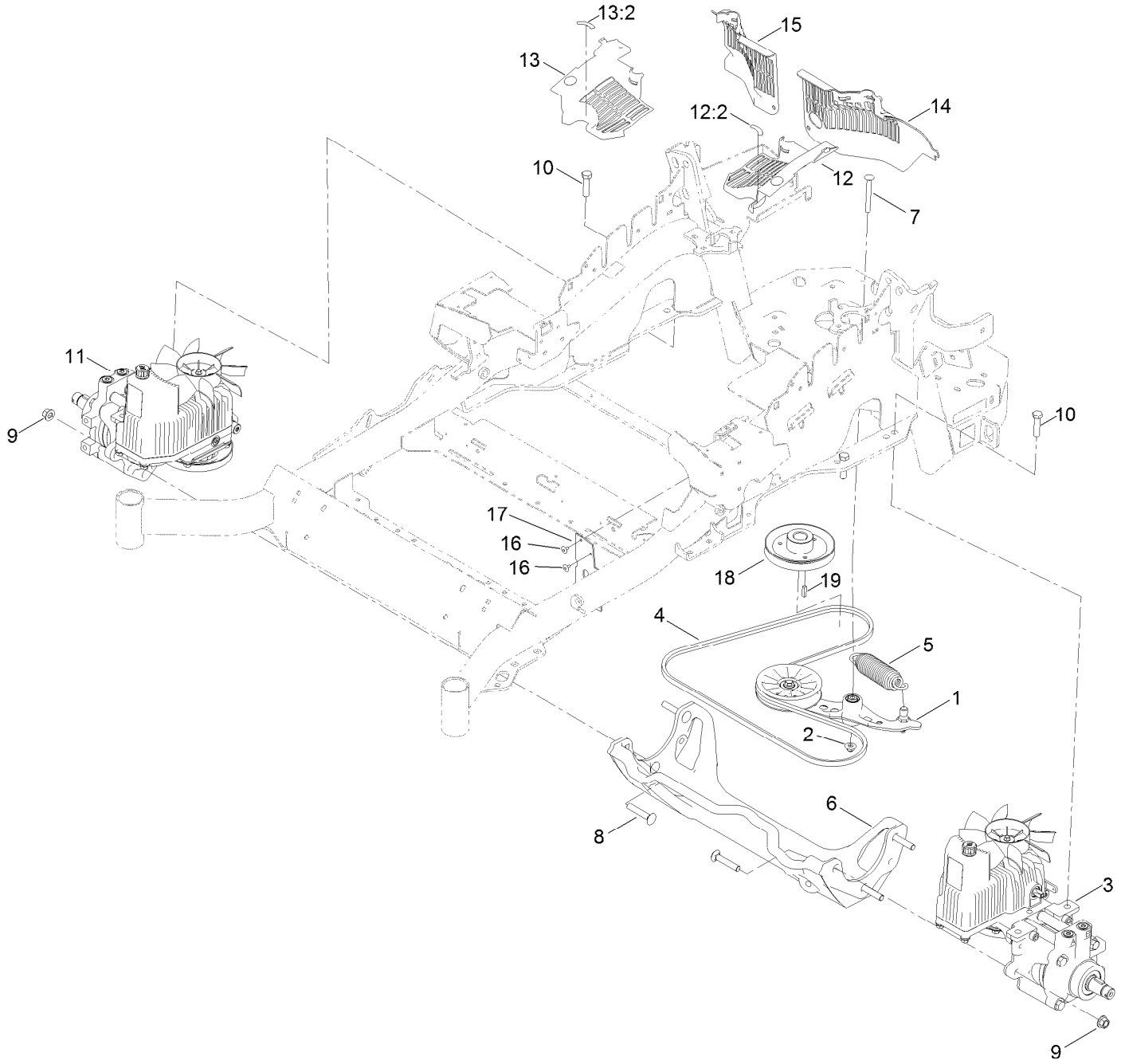

Hydraulic Drive Assembly (continued)

Ref.	Part Number	Qty.	Description
1	116-1255	1	Pump Idler ASM
2	109-6658	1	Nut-Flange, NI
3	135-7903	1	Hydro-LH
4	126-9835	1	Belt-V
5	116-6317	1	Spring-Extension
6	116-7558	1	Cradle-Hydro
7	116-1502	1	Bolt-Shoulder, Carriage
8	126-0095	6	Screw-CARR
9	99-5107	6	Nut-Lock
10	325-8	4	Screw-HH
11	135-7904	1	Hydro-RH
12	116-0170	1	LH Hydro Guard ASM
12:2	116-8726	1	Decal-Oil, Hydro

Ref.	Part Number	Qty.	Description
13	116-0171	1	RH Hydro Guard ASM
13:2	116-8726	1	Decal-Oil, Hydro
14	109-9057	1	Guard-Hydro, Rear (LH)
15	109-9058	1	Guard-Hydro, Rear (RH)
16	1-803035	2	Rivet-Pop
17	116-2362	1	Deflector-Air Flow
18	142-9445	1	Sheave, W/Hub
19	1-807259	1	Key
99	114-4713	1	Hypr-Oil 500 (Quart) ●
99	114-4714	1	Hypr-Oil 500 (Gallon) ●
99	114-4715	1	Hypr-Oil 500-5 (5 Gallon) ●
99	117-0390	1	Filter-Hydro ●

● Not illustrated

Pump Idler Assembly No. 116-1255

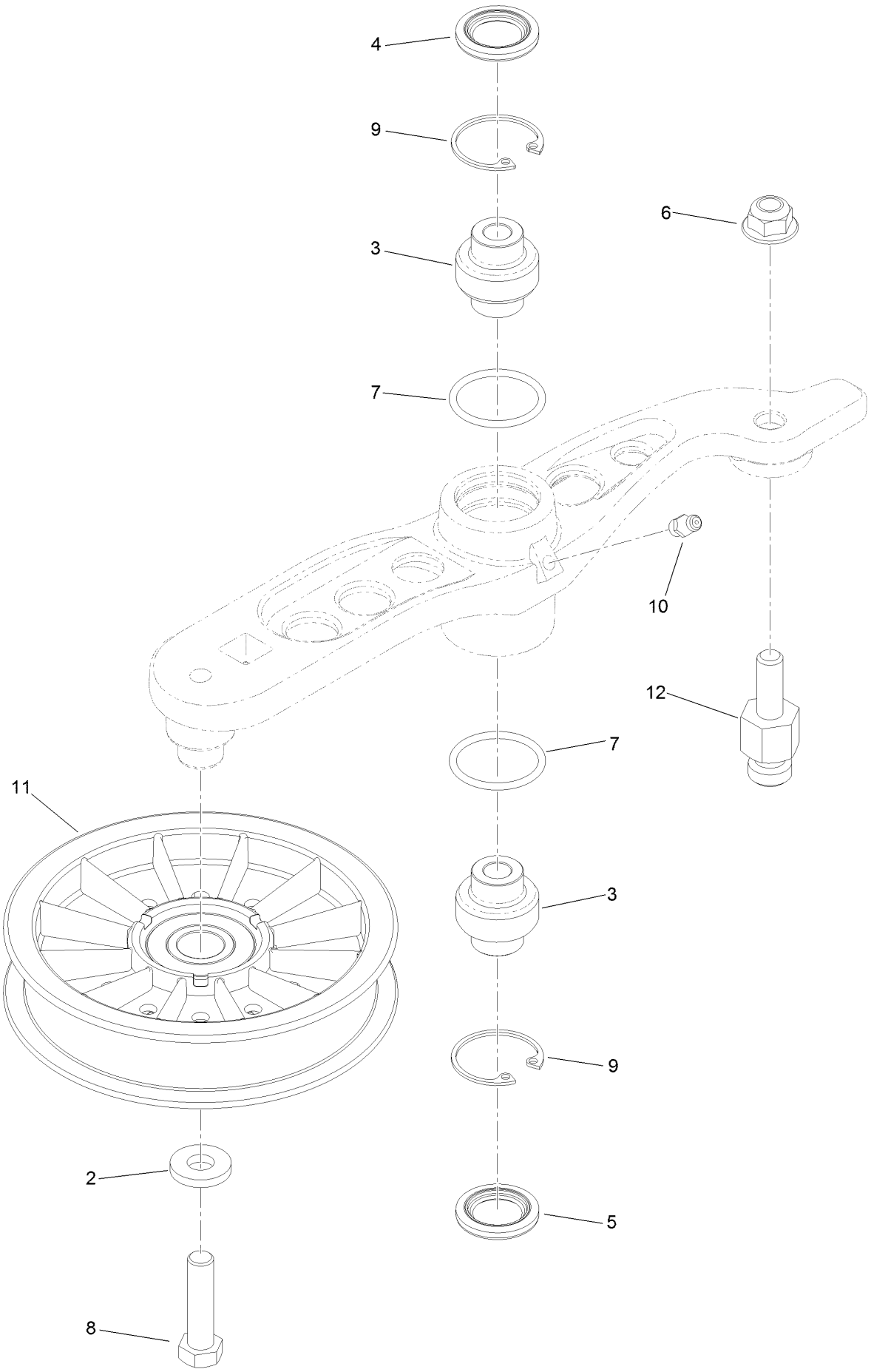

Pump Idler Assembly No. 116-1255 (continued)

Ref.	Part Number	Qty.	Description
2	43-0940	1	Spacer
3	103-3504	2	Bearing-Spherical
4	103-3505	1	Seal-Lip, Double
5	103-3506	1	Seal-Lip, Single
6	109-6658	1	Nut-Flange, NI
7	106-7159	2	O-Ring
8	323-8	1	Screw-HH
9	32120-10	2	Ring-Snap
10	302-19	1	Fitting-Grease
11	109-8076	1	Pulley-Idler
12	132-4724	1	Pin-Anchor, Spring

LH Hydro Assembly No. 135-7903

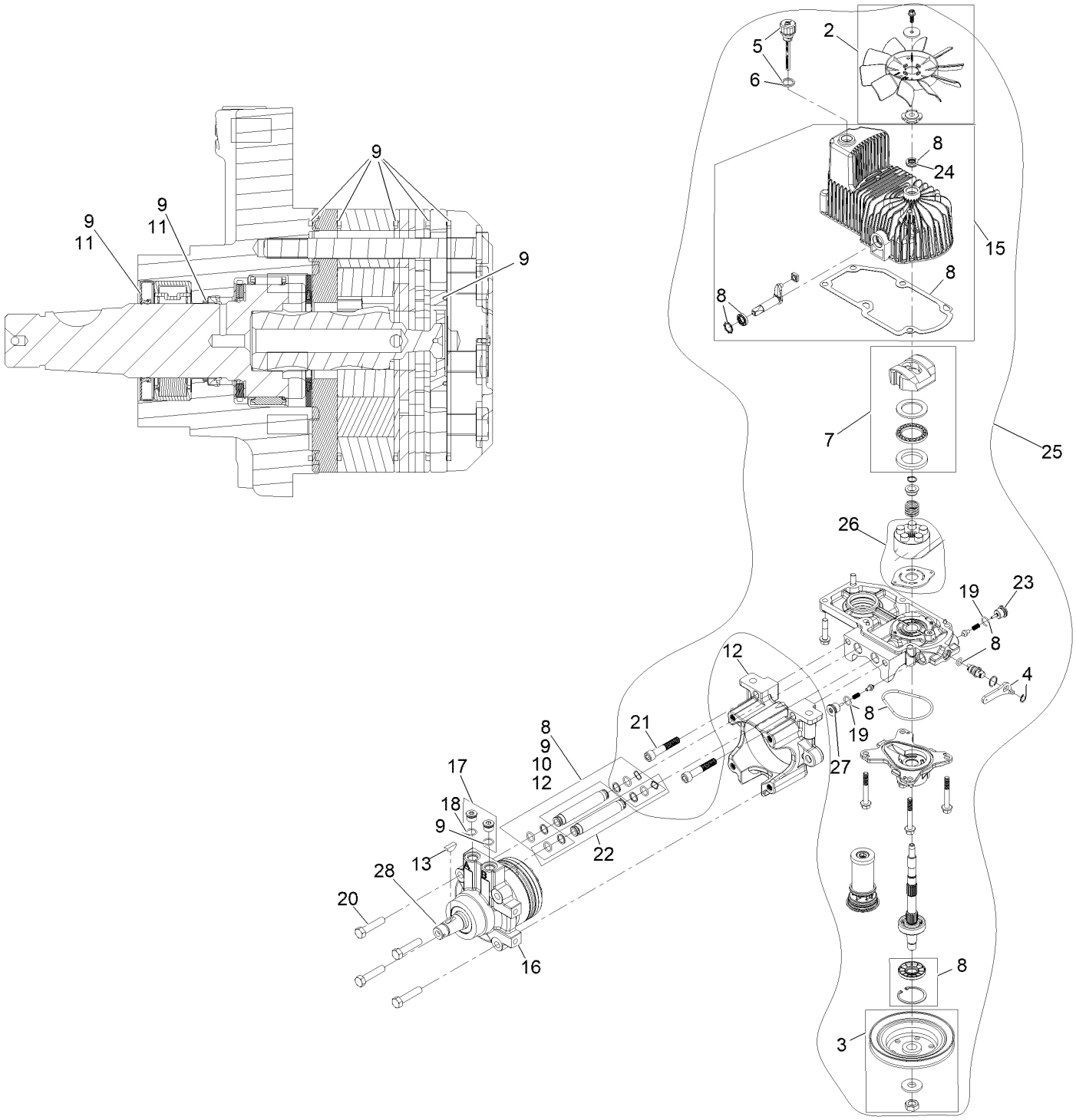

LH Hydro Assembly No. 135-7903 (continued)

Ref.	Part Number	Qty.	Description
2	142-3603	1	Kit, 7.8 In Fan
3	116-0234	1	Pulley Kit
4	116-0235	1	Handle
5	116-0236	1	Dipstick
6	116-0237	1	Gasket
7	116-1367	1	Swash Block Kit
8	142-3604	1	Kit, Pump Seal
9	116-1369	1	Motor Seal Kit
10	116-1370	1	Tube Seal Kit
11	116-1371	1	Output Shaft Seal Kit
12	116-5469	1	Cup-Nose
13	3257-42	1	Key-Woodruff 5/16 X 1
15	142-4460	1	Kit, Housing-Hydro LH
16	116-8915	1	Motor-Hydraulic
17	116-7901	1	Magnetic Plugs Service Kit
18	76-1900	2	O-Ring
19	116-8662	2	O-Ring-Valve, Check
20	116-8974	4	Screw-HH 1/2-20 X 2 1/4
21	116-8975	2	Screw-HSH 1/2-20 X 2 3/4
22	116-9922	2	Hydraulic Tube Kit
23	126-7466	1	Valve-Shock
24	126-7711	1	Seal-Drive, Fan
25	142-3609	1	Kit, Pump Section 12Cc LH
26	142-4500	1	Kit - 12Cc Port Plate,Rotate Grp
27	142-4459	1	Shock Valve Orificed 3800
28	146-3749	1	Output Shaft- Tl Uht Motor
99	116-1373	1	Flow Test Kit ●
99	116-4245	1	Puller-Pulley ●

● Not illustrated

RH Hydro Assembly No. 135-7904

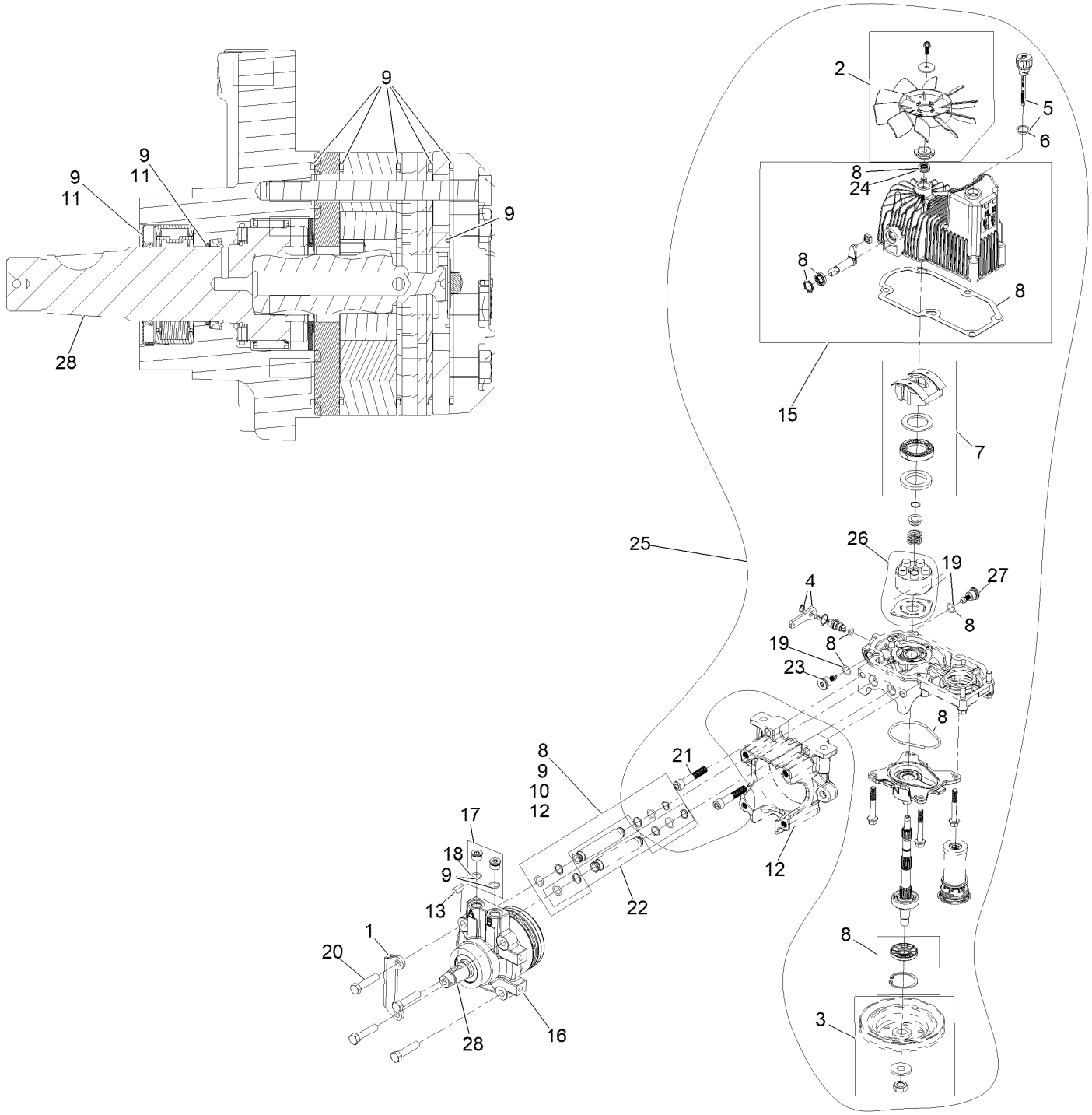

RH Hydro Assembly No. 135-7904 (continued)

Ref.	Part Number	Qty.	Description
1	135-7827	1	Plate, Horse Shoe Mount
2	142-3603	1	Kit, 7.8 In Fan
3	116-0234	1	Pulley Kit
4	116-0235	1	Handle
5	116-0236	1	Dipstick
6	116-0237	1	Gasket
7	116-1367	1	Swash Block Kit
8	142-3604	1	Kit, Pump Seal
9	116-1369	1	Motor Seal Kit
10	116-1370	1	Tube Seal Kit
11	116-1371	1	Output Shaft Seal Kit
12	116-5469	1	Cup-Nose
13	3257-42	1	Key-Woodruff 5/16 X 1
15	142-4461	1	Kit, Housing-Hydro RH
16	116-8916	1	Motor-Hydraulic RH 240Cc
17	116-7901	1	Magnetic Plugs Service Kit
18	76-1900	2	O-Ring
19	116-8662	2	O-Ring-Valve, Check
20	116-8974	4	Screw-HH 1/2-20 X 2 1/4
21	116-8975	2	Screw-HSH 1/2-20 X 2 3/4
22	116-9922	2	Hydraulic Tube Kit
23	126-7466	1	Valve-Shock
24	126-7711	1	Seal-Drive, Fan
25	142-3608	1	Kit, Pump Section 12Cc RH
26	142-4500	1	Kit - 12Cc Port Plate,Rotate Grp
27	142-4459	1	Shock Valve Orificed 3800
28	146-3749	1	Output Shaft- Tl Uht Motor
99	116-1373	1	Flow Test Kit ●
99	116-4245	1	Puller-Pulley ●

● Not illustrated

Rear Wheel Assembly

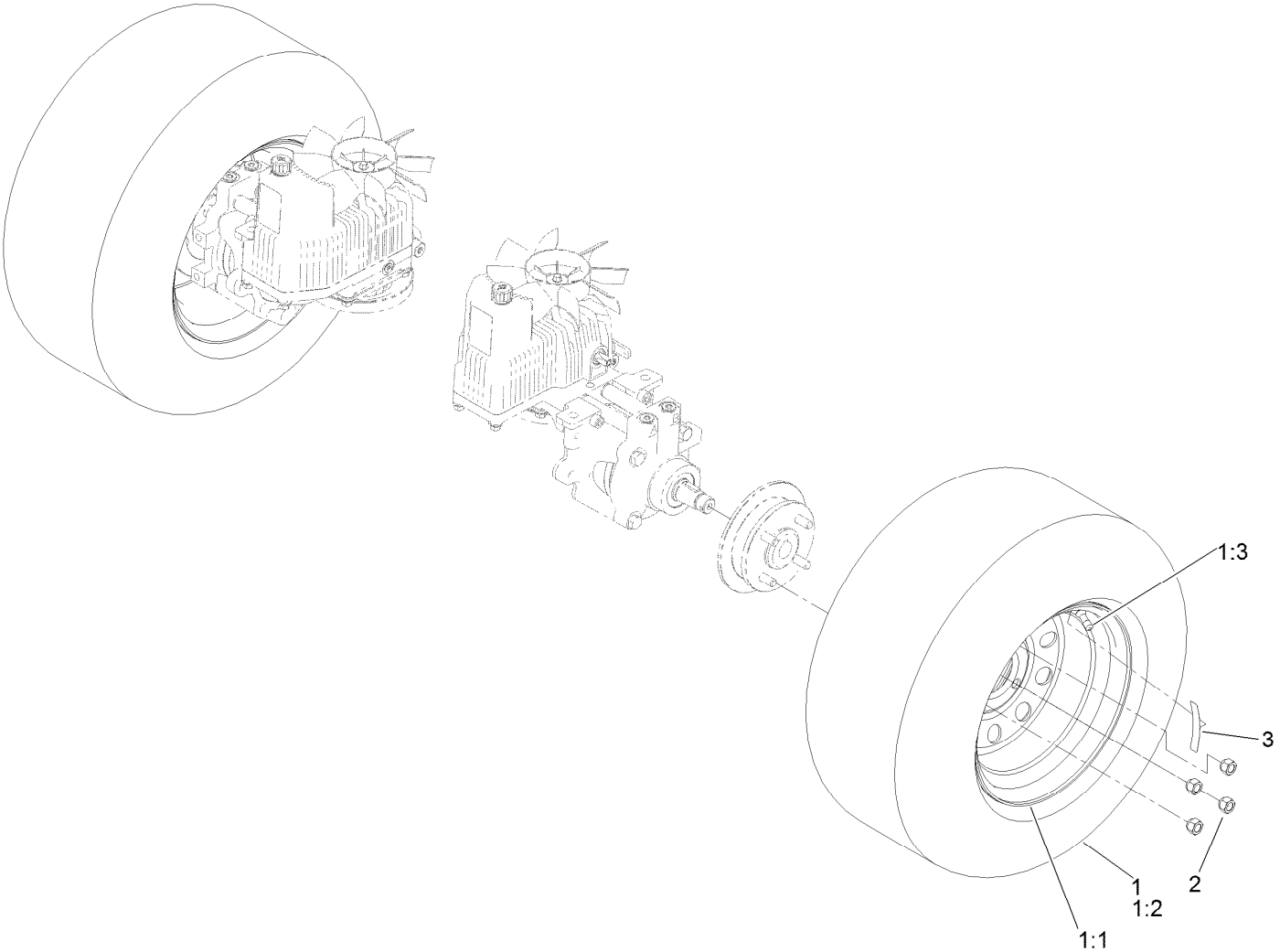

Rear Wheel Assembly (continued)

Ref.	Part Number	Qty.	Description
1	127-9520	2	Wheel And Tire ASM
1:1	127-9517	1	Wheel
1:2	1-633993	1	Tire
1:3	232-27	1	Stem-Valve
2	242-50	8	Nut-Lug
3	126-2055	2	Decal-Torque, Wheel Hub Lug

Park Brake Assembly

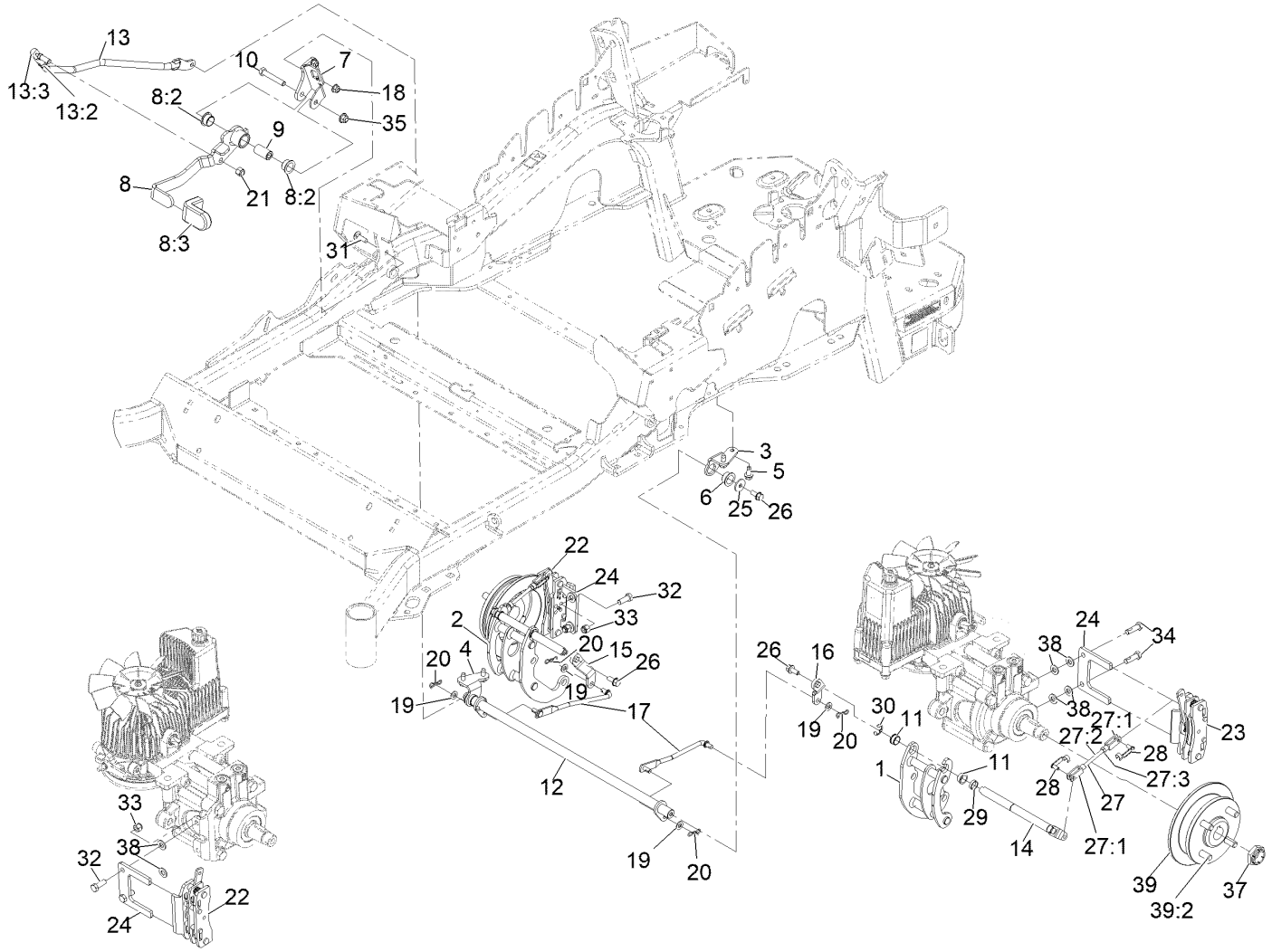

Park Brake Assembly (continued)

Ref.	Part Number	Qty.	Description
1	126-4248	1	Mount-Bellcrank, LH
2	126-4249	1	Mount-Bellcrank, RH
3	116-9681	1	Mount-Pivot, LH
4	116-9682	1	Mount-Pivot, RH
5	32144-70	4	Screw-HWH 5/16-18 X 3/4 Tf
6	109-8054	2	Bushing-Flanged
7	116-9096-01	1	Bracket-Mount
8	135-7565	1	Brake Lever ASM
8:2	109-8054	2	Bushing-Flanged
8:3	132-4749	1	Grip-Lever
9	116-9117	1	Pivot-Handle, Brake
10	323-11	1	Screw-HH 3/8-16 X 2 1/4
11	126-6199	4	Bushing
12	135-7800	1	Shaft-Cross
13	135-7805	1	ASM, Front Linkage
13:2	94-7572	1	End-Tie Rod, RH
13:3	3220-3	1	Nut-Jam 3/8-24
14	126-4251	2	Bellcrank
15	126-3716	1	Arm-Inner, RH
16	126-3715	1	Arm-Inner, LH
17	142-6327	2	Mid-Link, Long
18	104-8300	2	Nut-Nyloc 5/16-18 Flg
19	3256-23	4	Washer-5/16 SAE
20	119-1415	4	Pin-Cotter, Locking
21	3296-6	1	Nut-Nyloc 3/8-24
22	135-7440	1	Caliper-Brake, RH
23	135-7441	1	Caliper-Brake, LH
24	135-7828	2	Plate-Mount, Brake
25	115-7109	2	Washer-Flat
26	98-9940	4	Screw-HHF
27	126-7587	2	Rear Linkage ASM
27:1	126-7588	2	Yoke
27:2	116-9069	1	Linkage, Rear
27:3	3220-1	1	Nut-Jam 1/4-28
28	126-6395	4	Pin-Clevis, Spring
29	126-6200	2	Spacer
30	32120-19	2	E-Ring
31	3230-2	2	Bolt-Carriage 5/16-18 X 1
32	135-7915	2	Screw-HH,
33	112-0236	2	Nut-Lock
34	135-7890	2	Screw-HH, Patch,
35	104-8301	1	Nut-Nyloc 3/8-16 Flg
37	116-1399	2	Locknut
38	3256-24	6	Washer-3/8 SAE
39	142-2701	2	Wheel Hub ASM
39:2	116-1696	4	Stud-Wheel

Fuel System Assembly

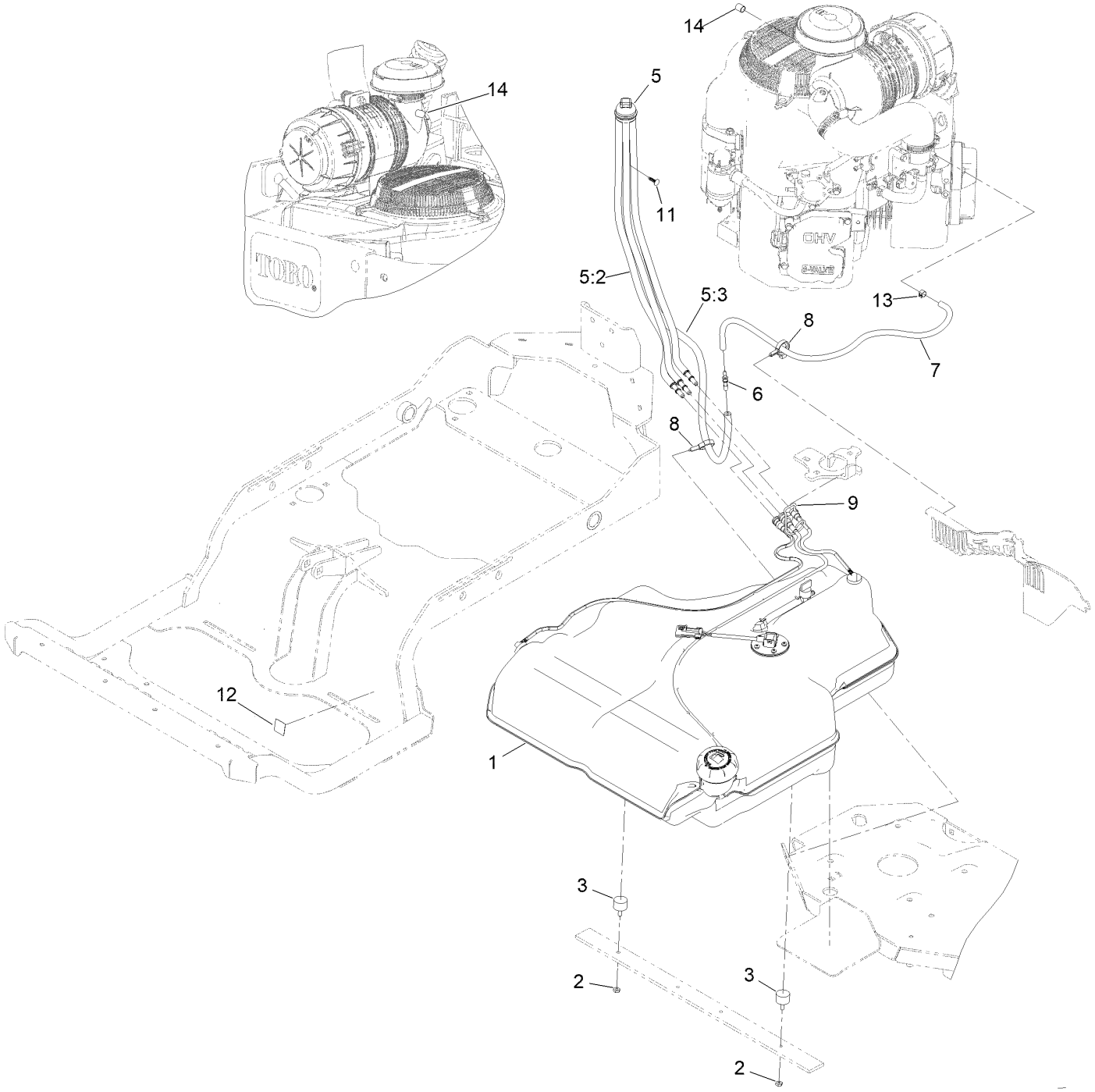

Fuel System Assembly (continued)

Ref.	Part Number	Qty.	Description
1	135-0643	1	Fuel Tank ASM
2	3218-1	2	Nut-Jam
3	1-523420	2	Bumper
5	127-0583	1	Fuel Manifold Vent ASM
5:2	109-0302	3	Hose-Fuel
5:3	108-5376	1	Hose-Fuel
6	135-5678	1	Barb-Fuel
7	140-4956	1	Hose-Fuel
8	105-1853	2	Clamp-Hose
9	116-6005	1	Retainer-Line, Vapor
11	125-8067	1	Plug-Plastic
12	130-6409	1	Decal-Rcm
13	2412-80	1	Clamp-Hose
14	116-4464	1	Plug-Port

Fuel Tank Assembly No. 135-0643

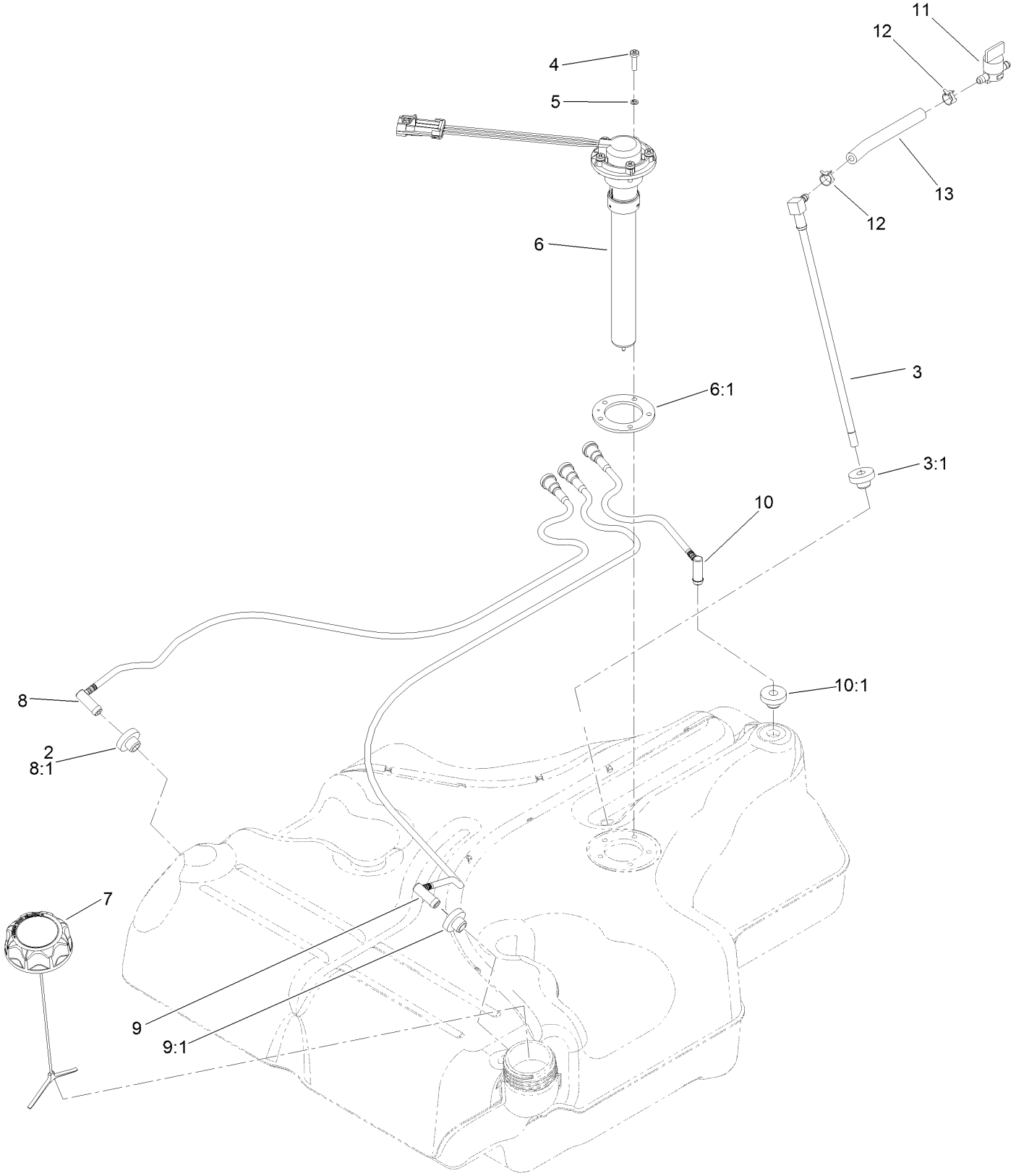

Fuel Tank Assembly No. 135-0643 (continued)

Ref.	Part Number	Qty.	Description
2	46-6560	4	Bushing
3	116-2459	1	Fuel Line Kit (With Grommet)
3:1	46-6560	1	Bushing
4	3290-500	5	Screw-PPH
5	3253-17	5	Washer-Lock
6	126-3913	1	Float-Sender, Fuel
6:1	126-3950	1	Gasket-Sender
7	126-1789	1	Cap-Fuel, Ratcheting
8	116-2460	1	RH Vent Line Kit (With Grommet)
8:1	46-6560	1	Bushing
9	116-2461	1	LH Vent Line Kit (With Grommet)
9:1	46-6560	1	Bushing
10	116-2462	1	Rear Vent Line Kit (With Grommet)
10:1	46-6560	1	Bushing
11	1-603770	1	Valve-Fuel
12	2412-98	2	Clamp-Hose
13	109-0650	1	Hose-Fuel

Seat Mounting Assembly

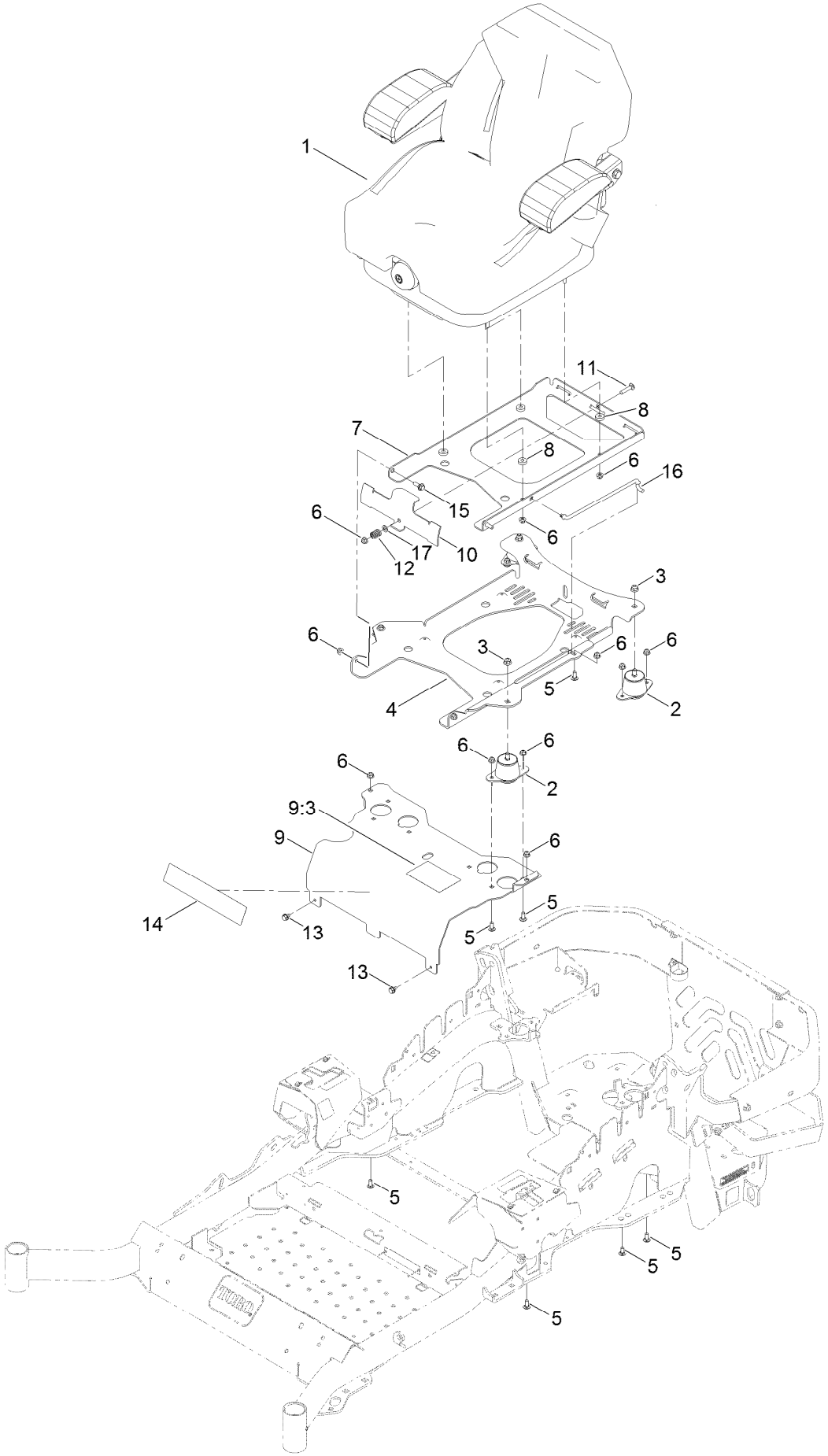

Seat Mounting Assembly (continued)

Ref.	Part Number	Qty.	Description
1	147-4984	1	Seat-Suspension
2	109-9034	4	Isolator-Seat
3	104-8301	4	Nut-HF, NI
4	116-3860-03	1	Plate-Tilt, Seat Support
5	3230-23	11	Bolt-CARR
6	104-8300	18	Nut-HF, NI
7	116-3859-03	1	Plate-Frame, Seat
8	26-4840	4	Spacer-Pin, Mounting
9	125-9385	1	Seat Mount ASM
9:3	125-9383	1	Decal-Service Aid
10	109-9881-03	1	Plate-Latch, Seat
11	3230-4	1	Bolt-CARR
12	107-3017	1	Spring-Compression
13	9266934	2	Screw
14	140-1215	1	Decal-Console
15	116-1297	2	Screw-Shoulder
16	116-0070	1	Rod-Prop
17	3256-23	1	Washer-Plain

Seat Assembly No. 147-4984

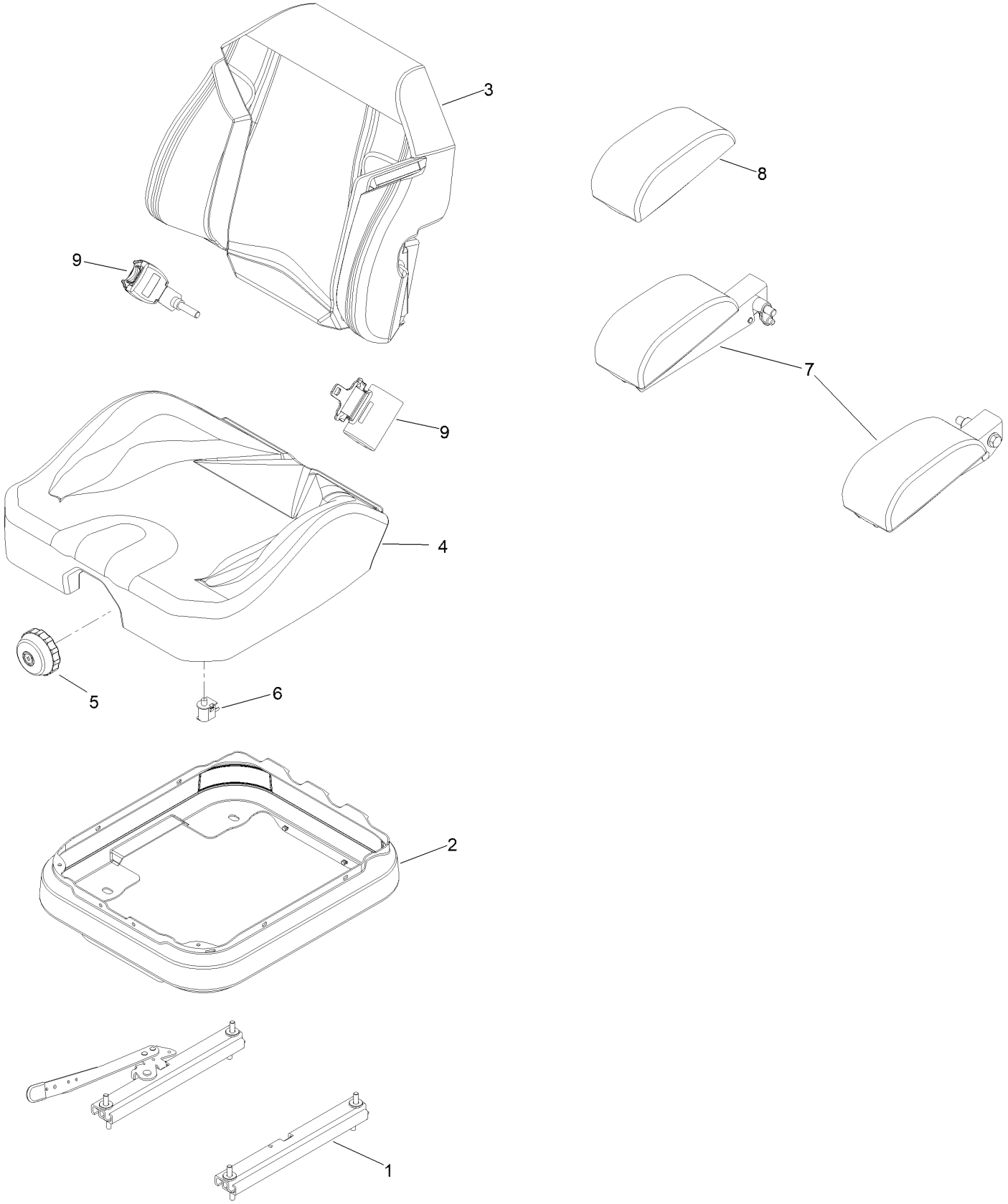

Seat Assembly No. 147-4984 (continued)

Ref.	Part Number	Qty.	Description
1	140-8012	1	Seat Track Set
2	116-5659	1	Cover-Suspension Bellows
3	140-8004	1	Cover-Back
4	140-8005	1	Cover-Cushion
5	116-8911	1	Knob-Adjuster
6	82-2190	1	Switch-Bail
7	147-4985	1	Armrest Kit
8	109-9802	1	Arm Rest Pad Set
9	126-2061	1	Seat Belt Service Kit

Motion Control Assembly

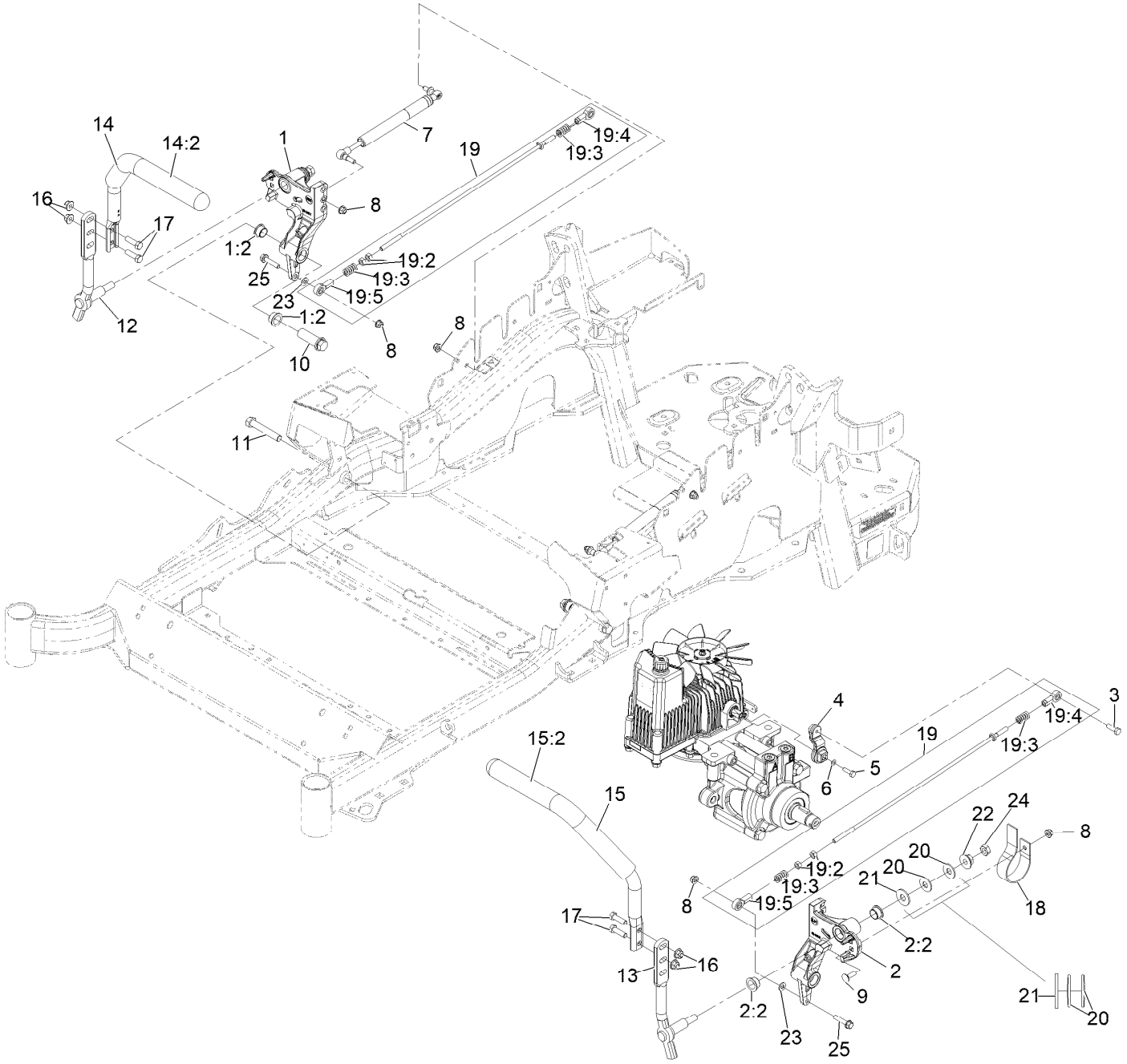

Motion Control Assembly (continued)

Ref.	Part Number	Qty.	Description
1	116-0880	1	RH Motion Control And Bushing ASM
1:2	109-8054	4	Bushing-Flanged
2	116-0881	1	LH Motion Control And Bushing ASM
2:2	109-8054	4	Bushing-Flanged
3	116-0648	2	Screw-HH 5/16-18 X 1 W/Patch ●
4	109-4581	2	Arm-Control, Pump
5	9080046	2	Screw-HH 1/4-20 X 7/8 ●
6	1-303435	2	Washer-Spring Disc 1/4
7	146-0859	2	Damper, Motion Control
8	104-8300	8	Nut-Nyloc 5/16-18 Flg
9	3230-2	2	Bolt-Carriage 5/16-18 X 1
10	109-5891	2	Hub-Threaded
11	325-12	2	Screw-HH 1/2-13 X 3
12	116-0039	1	Lever-Control Motion, RH
13	116-0040	1	Lever-Control Motion, LH
14	135-4371	1	RH Handle ASM
14:2	109-5668	1	Grip-Lever, Control
15	135-4373	1	LH Handle ASM
15:2	109-5668	1	Grip-Lever, Control
16	104-8301	4	Nut-Nyloc 3/8-16 Flg
17	323-7	4	Screw-HH 3/8-16 X 1 1/4
18	109-5575	2	Spring-Leaf
19	109-8107	2	Pump Linkage Rear ASM
19:2	3219-2	2	Nut-Hex 5/16-24
19:3	1-323245	2	Spring-Compression
19:4	1-633152	1	Balljoint
19:5	1-543017	1	Balljoint
20	109-9505	4	Washer, Spring Disc 1/2
21	3256-6	2	Washer
22	32128-56	2	Nut-Hex 1/2-13 Flange
23	3256-23	2	Washer-5/16 SAE
24	3218-5	2	Nut-Jam 1/2-13
25	115-1794	2	Screw-Hex Flange 5/16-18 X 1 1/2

● Use Pro-Lock, Nut Type (P/N 1-840022, .5ml tube) on threads.

Console Assembly

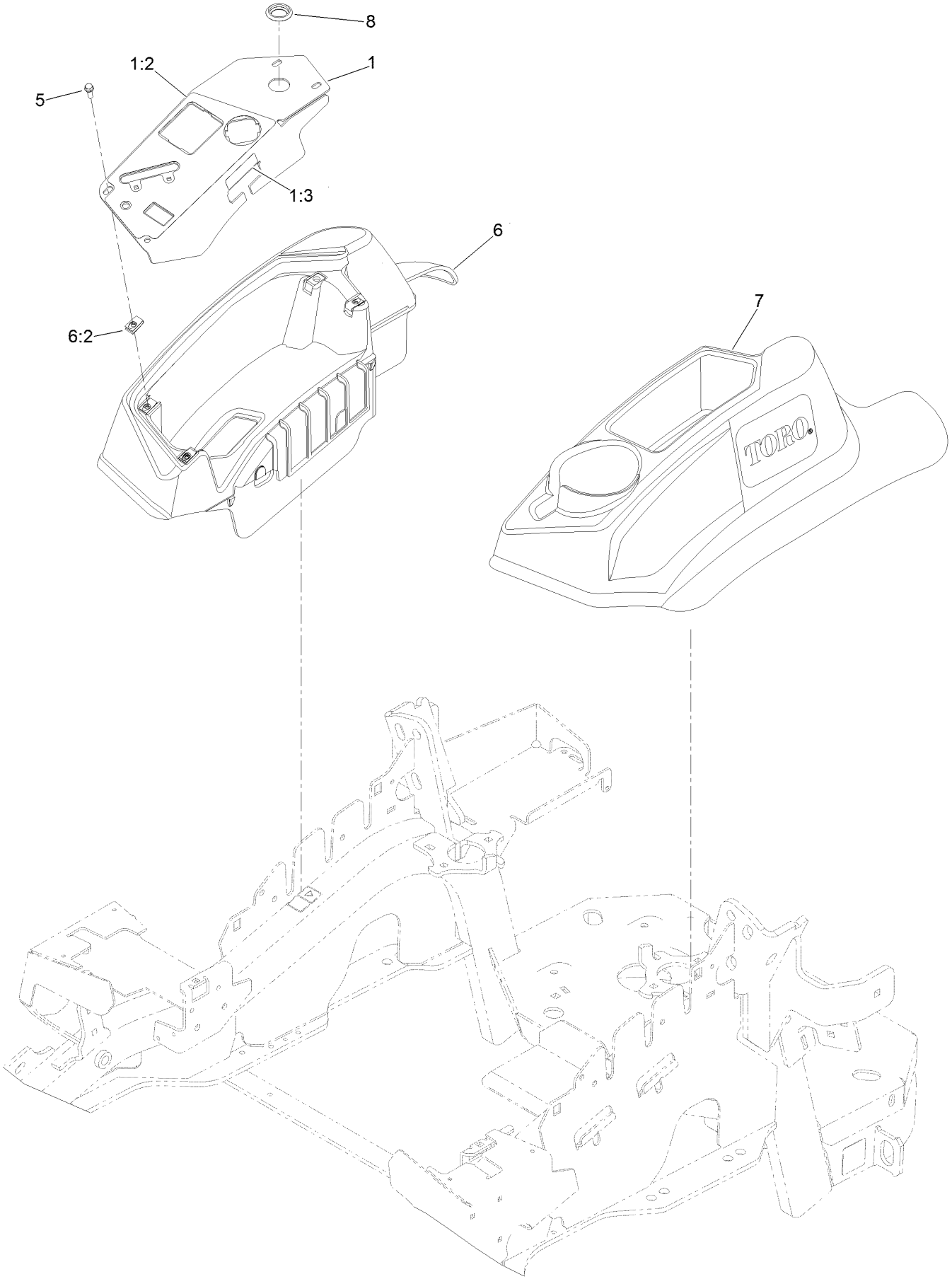

Console Assembly (continued)

Ref.	Part Number	Qty.	Description
1	119-6663	1	Control Panel ASM
1:2	121-7551	1	Decal-Panel, Control
1:3	114-4466	1	Decal-Fuses
5	32105-15	4	Screw-HWH
6	119-2603	1	RH Console ASM
6:2	107069	4	Clip
7	119-2602	1	Console-LH
8	116-1875	1	Plug-Plastic

Electrical Assembly

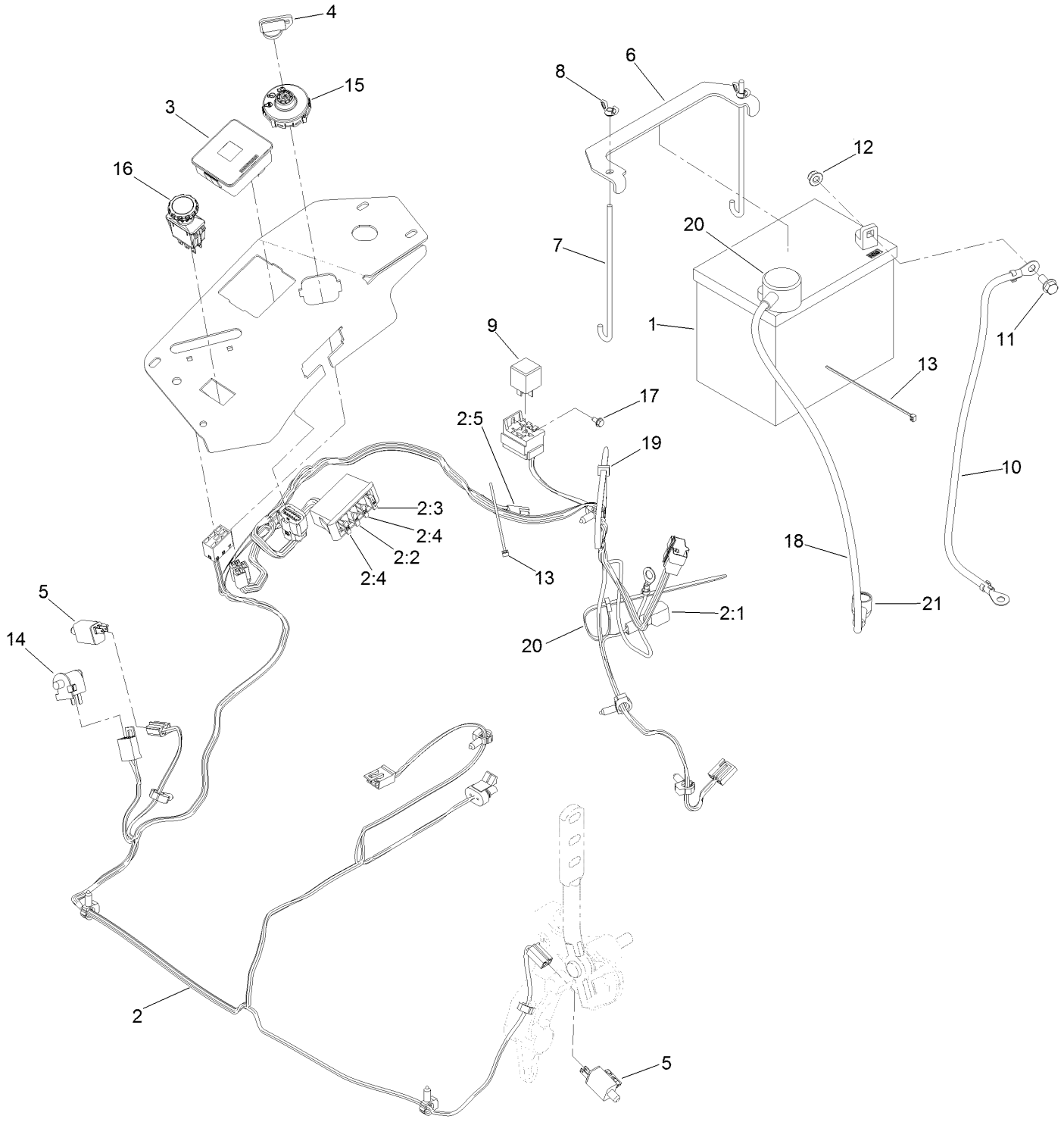

Electrical Assembly (continued)

Ref.	Part Number	Qty.	Description
1	104-8162	1	Battery
2	116-6009	1	Harness-Wire, Main ●
2:1	103-3895	1	Diode
2:2	218-578	1	Fuse-Blade, 10 Amp
2:3	109355	1	Fuse-Blade, 15 Amp
2:4	109102	2	Fuse-Blade, 25 Amp
2:5	116-0053	1	Cap-Plug
3	117-3882	1	Fuel/Hour Meter ASM
4	1-603511	1	Keys-Ignition (Spare Pair)
4	63-8360	1	Key-Ignition
5	110-6765	2	Switch
6	116-0042-03	1	Strap-Tie Down, Battery
7	1-633651	2	Bolt-Holddown
8	1-543792	2	Wingnut
9	1-643275	1	Relay
10	114-1218	1	Cable-Battery, Negative
11	3234-5	2	Screw-HHF
12	104-8300	2	Nut-HF, NI
13	1-303287	2	Tie-Cable
14	82-2190	1	Switch-Bail
15	137-4100	1	Switch-Ignition
16	135-3653	1	Switch, PTO 10A
17	104-2065	1	Screw-HWH
18	115-3864	1	Cable-Battery, Positive
19	3290-378	2	Tie-Cable
20	109-2407	1	Insulator-Battery
21	1-543393	1	Insulator-Solenoid

● Use dielectric grease on all unsealed connectors and terminals only. Do not apply in sealed connectors.

Deck Lift Assembly

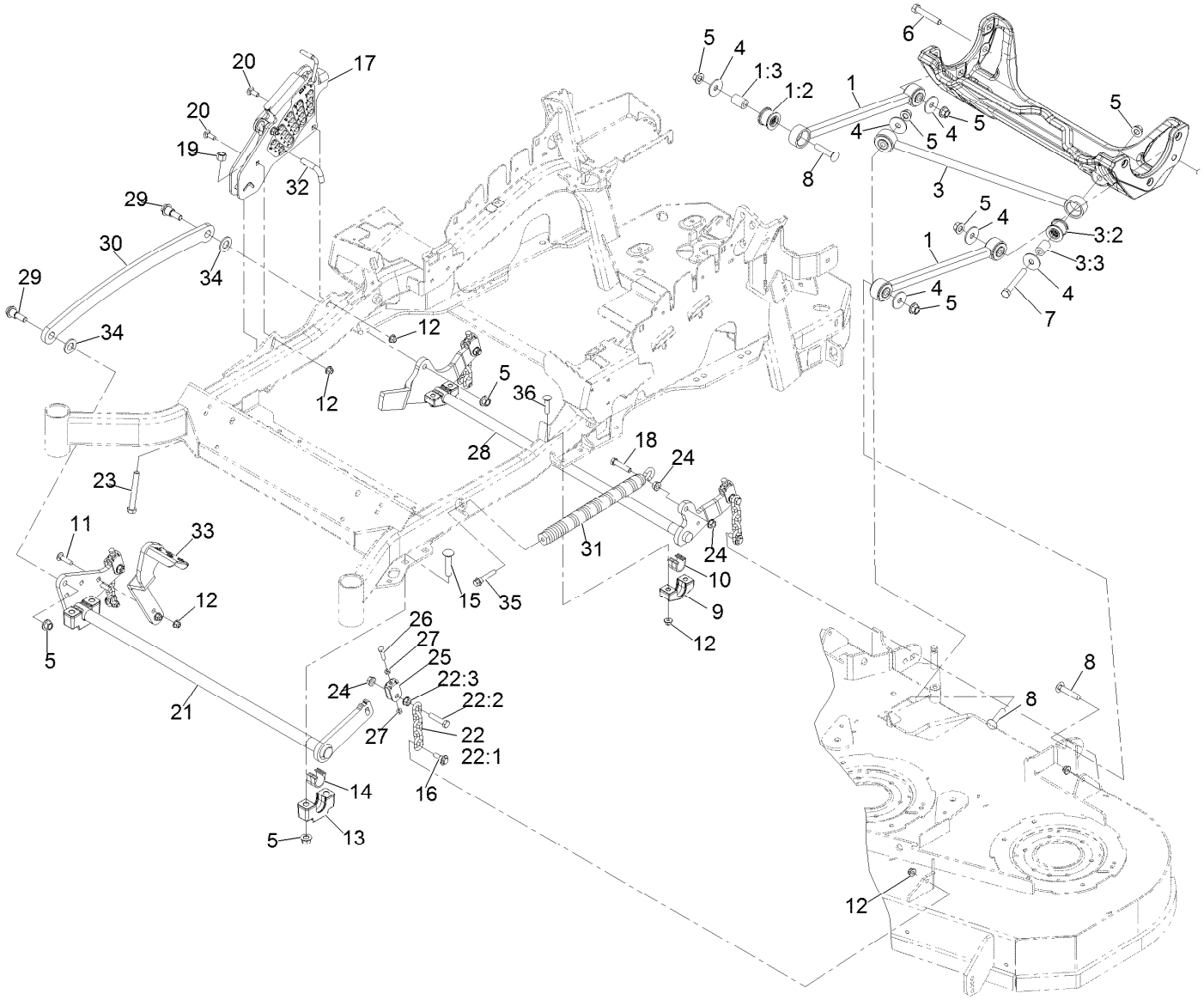

Deck Lift Assembly (continued)

Ref.	Part Number	Qty.	Description
1	116-2031	2	Long Strut ASM
1:2	109-5009	2	Bushing-Suspension, Rubber
1:3	109-5010	2	Spacer
3	109-5013	1	Panhard Rod ASM
3:2	109-5009	2	Bushing-Suspension, Rubber
3:3	109-5010	2	Spacer
4	86-1990	6	Washer-Thrust
5	99-5107	12	Nut-Lock
6	325-12	2	Screw-HH
7	325-17	1	Screw-HH
8	3233-34	3	Screw-CARR
9	127-0553	2	Support-Bearing, Cross Shaft (Rear)
10	109-7173	2	Bearing-Cross Shaft, Rear
11	3231-4	2	Screw-CARR
12	104-8301	12	Nut-HF, NI
13	109-9409	2	Support-Bearing, Cross Shaft (Front)
14	109-9410	2	Bearing-Cross Shaft, Front
15	116-1700	4	Bolt-CARR
16	109-9840	4	Screw-Shoulder, HHF
17	109-7438	1	HOC ASM
18	109-9065	1	Screw-HH
19	3296-23	1	Nut-Lock, NI
20	3231-2	2	Bolt-CARR
21	126-2475-03	1	Decklift-Front
22	116-0756	4	Deck Lift Chain ASM
22:1	1-633447	1	Chain-Lift, Deck
22:2	109-9065	1	Screw-HH
22:3	32128-37	1	Nut-HF
23	116-0559	1	Bolt-TAP
24	32128-37	6	Nut-HF
25	109-9066	4	Yoke-Adjust, Deck
26	322-47	4	Screw-HH
27	3218-2	8	Nut-Hex Jam
28	116-0459-03	1	Lift-Deck, Rear
29	116-0780	2	Screw-Shoulder, HHF
30	116-0797-03	1	Link-Lift, Deck
31	116-0000	1	Spring-Extension
32	116-5584	1	Pin-HOC
33	116-1919-01	1	Lever-Foot
34	3256-28	2	Washer-Flat
35	92-7674	1	Bolt-Shoulder
36	3231-7	4	Screw-CARR

Height-of-Cut Assembly No. 109-7438

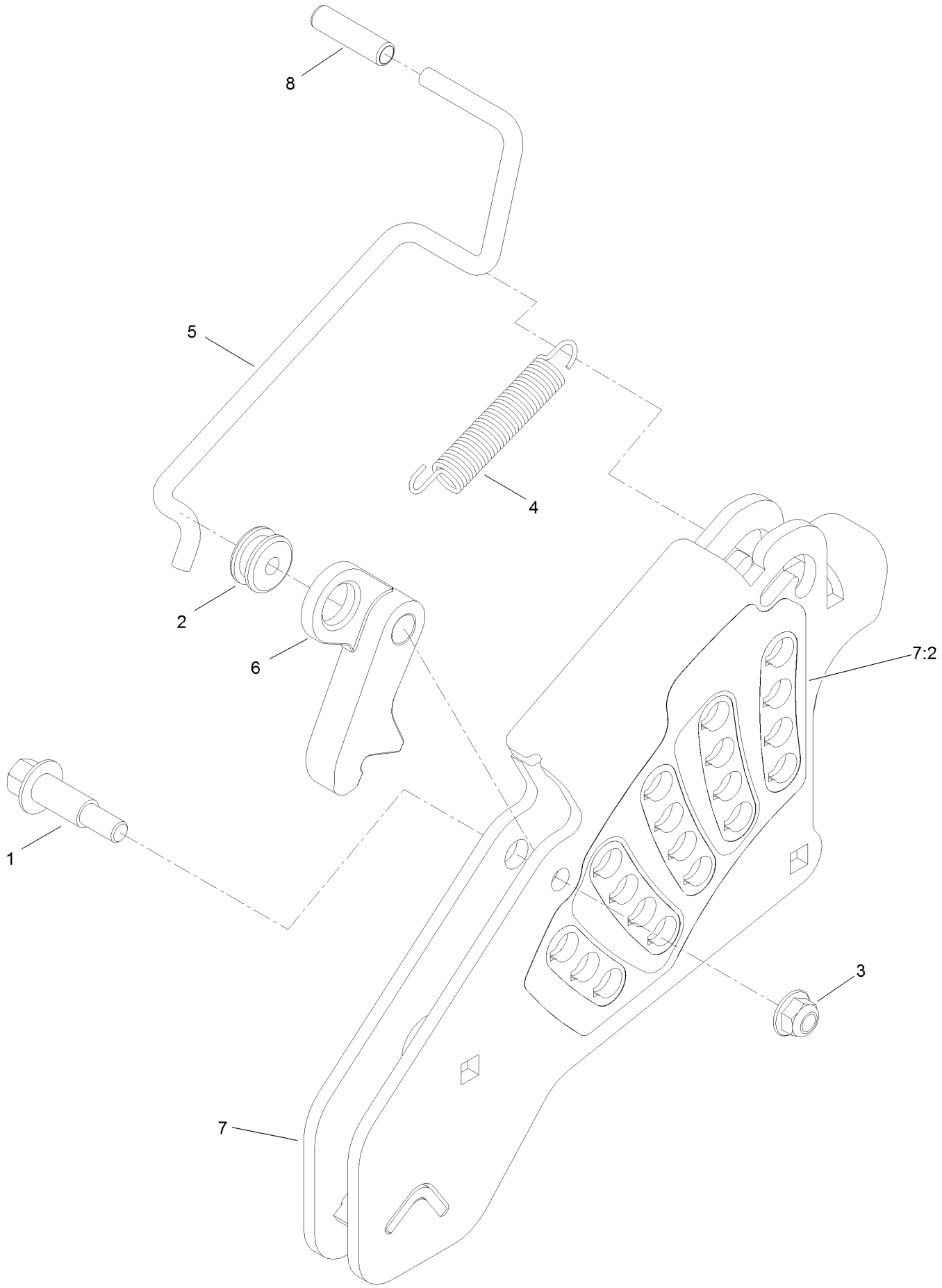

Height-of-Cut Assembly No. 109-7438 (continued)

Ref.	Part Number	Qty.	Description
1	62-1330	1	Bolt-Shoulder
2	109-7130	1	Grommet
3	104-8301	1	Nut-HF, NI
4	109-7124	1	Spring-Extension
5	109-7128	1	Rod-Lock, Transport
6	116-0118	1	Pawl-Transport, HOC
7	109-7335	1	HOC Plate ASM
7:2	126-4398	1	Decal-HOC
8	109-8250	1	Grip-Lever

Engine, Clutch and Muffler Assembly

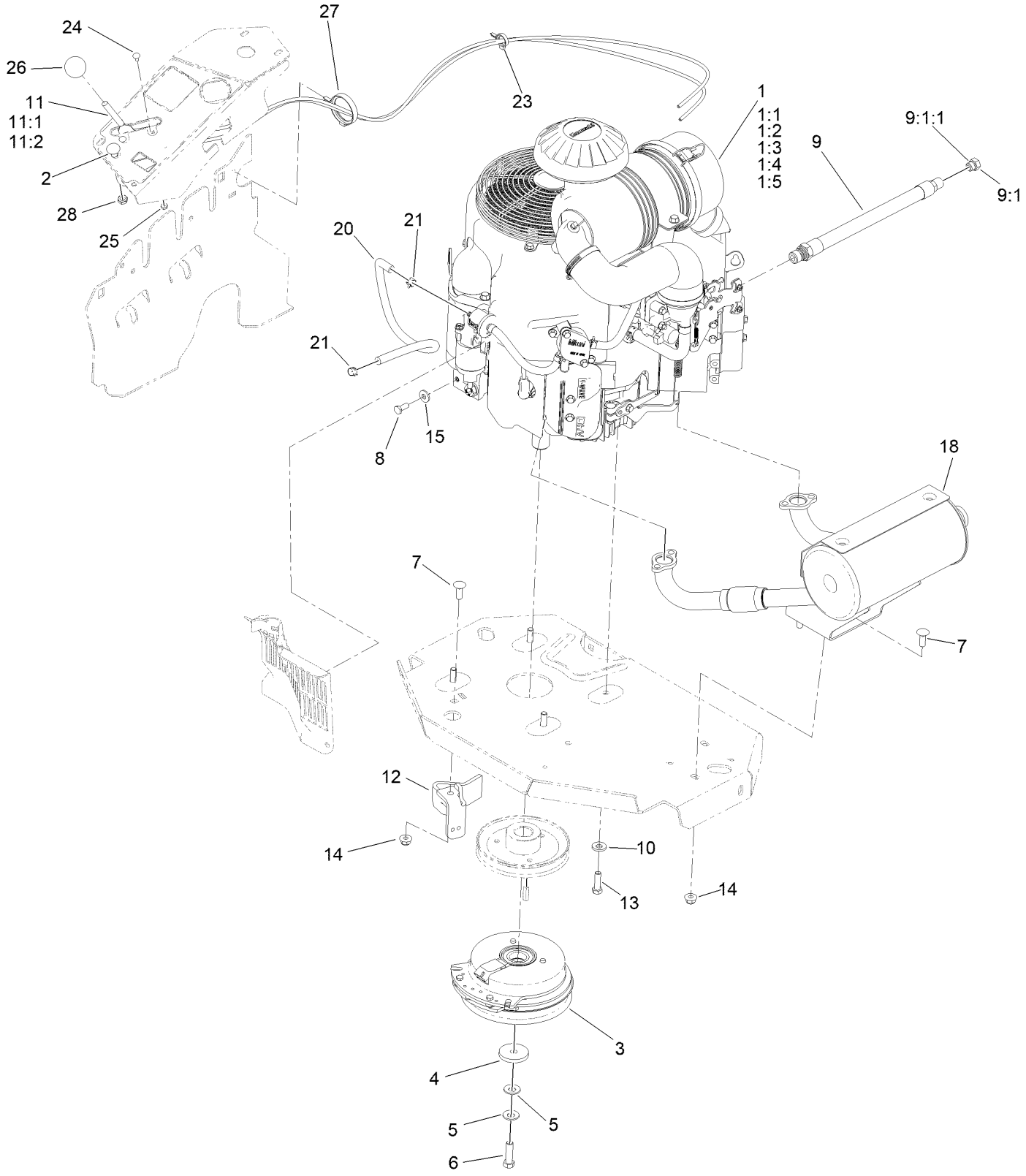

Engine, Clutch and Muffler Assembly (continued)

Ref.	Part Number	Qty.	Description
1		1	Engine-Kawasaki ▲◆
1:1	KW10761	1	Filter-Oil Kaw
1:2	119-5944	1	Element-Filter, Air (Outer)
1:3	119-5945	1	Element-Filter, Air (Inner)
1:4	142-6949	1	Filter-Fuel
1:5	92-2153	2	Plug-Spark
2	115-2753	1	Control-Choke
3	116-1620	1	Clutch Kit
4	109-6919	1	Washer-Plain
5	1-603610	2	Washer-Spring
6	109-9761	1	Screw-HH ❑
7	3231-22	5	Screw-CARR
8	33114-020	1	Screw-HH
9	116-4924	1	Engine Oil Drain Hose ASM ■
9:1	353-508	1	Plug-HH ●
9:1:1	237-42	1	O-Ring
10	98-5975	4	Washer-Belleville
11	110-5727	1	Throttle Control ASM
11:1	112-2334	1	Lever-Throttle
11:2	110-5728	1	Cable-Throttle
12	116-2612-01	1	Clutch-Anchor
13	323-7	4	Screw-HH
14	104-8301	5	Nut-HF, NI
15	1-303334	1	Washer-Spring
18	135-7562	1	Kit, Muffler
20	109-0298	1	Line-Fuel
21	2412-98	2	Clamp-Hose
23	105-1853	1	Clamp-Hose
24	1-807513	2	Bolt-CARR
25	3296-2	2	Nut-Lock, NI
26	1-603175	1	Knob-Ball
27	117-7817	1	Clamp-Harness
28	3220-3	1	Nut-HJ

● Torque to 24-26 ft-lb
▲ Not serviced separately
❑ Use Pro-Lock, Nut Type (P/N 1-840022, .5ml tube) on threads.
■ Torque to 23-29 ft-lb
◆ Obtain parts from www.kawpower.com

Deck Assembly

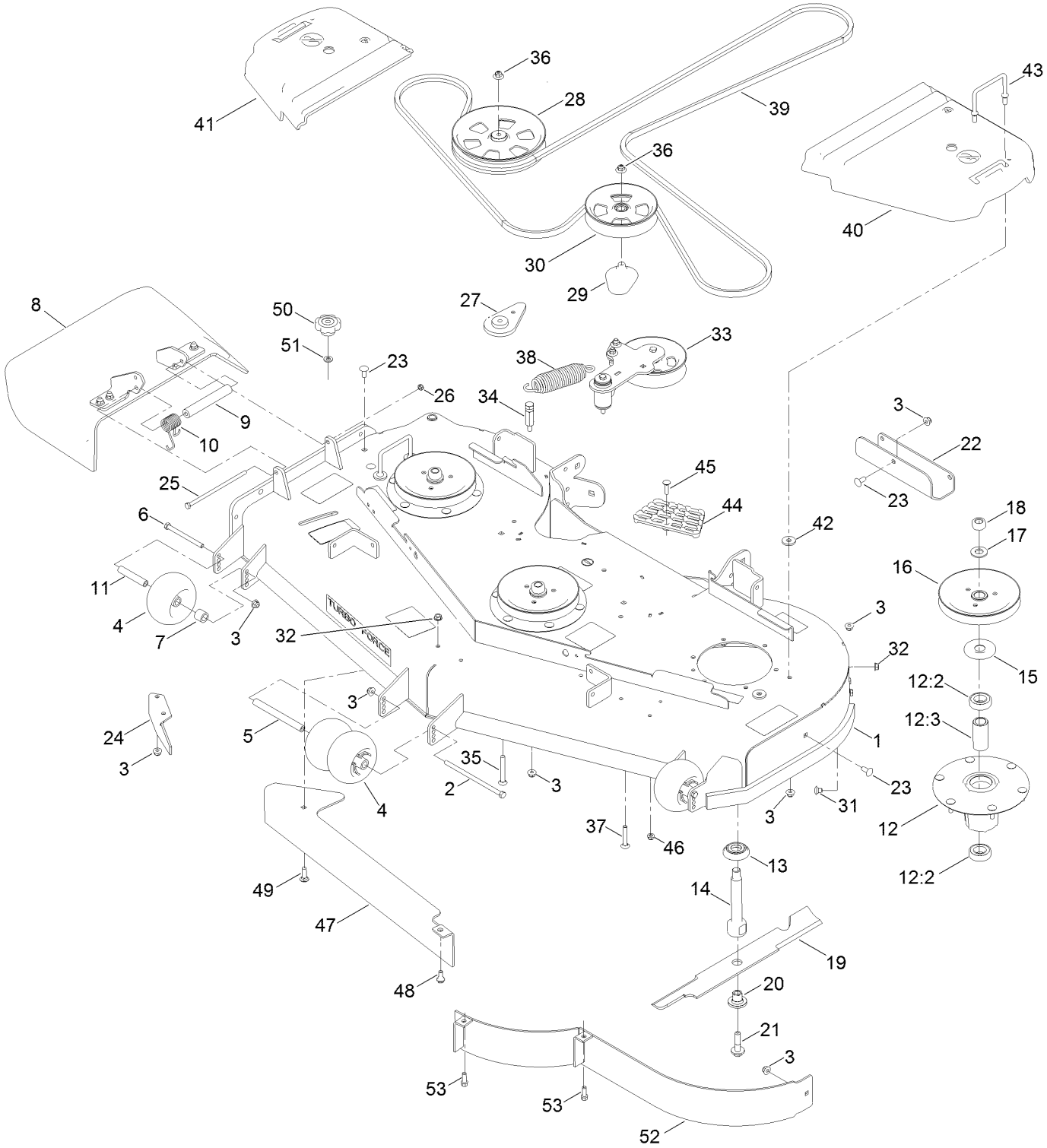

Deck Assembly (continued)

Ref.	Part Number	Qty.	Description
1	140-1169	1	Deck Decal ASM
2	108-5388	1	Screw-HH
3	104-8301	32	Nut-HF, NI
4	1-603299	4	Roller-Scalp, Anti
5	98-5967	1	Spacer-Wheel
6	323-23	2	Screw-HH
7	98-7913	2	Tube-Spacer
8	108-2792	1	Rubber Deflector ASM
9	105-4622	1	Spacer
10	108-4052	1	Spring-Torsion
11	98-7912	2	Tube-Spanner
12	137-9780	3	Spindle ASM
12:2	116-0720	2	Bearing-Ball
12:3	138-6042	1	Spacer-Bearing
13	137-9784	3	Guard-Bottom
14	138-6045	3	Shaft-Spindle
15	103-1330	3	Guard-Bearing, Top
16	138-6059	3	Sheave-Drive, Blade
17	103-2802	3	Washer
18	116-7306	3	Nut-Hex
19	140-1240	3	Blade
20	137-9787	3	Bushing-Hex
21	109-9220	3	Screw-Sems
22	121-8031-01	1	Plate-Skid
23	3231-27	6	Screw-CARR
24	106-3216-01	1	Baffle-Discharge
25	322-50	1	Screw-HH
26	3296-47	1	Nut-Lock,NI
27	109-9416	1	Spacer-Idler
28	132-4734	1	Pulley-Idler,Flat
29	109-2872	1	Spacer-Pulley
30	136-5404	1	Pulley-Idler, Flat
31	108-5387	3	Screw-CARR
32	3290-357	6	Nut-HSF
33		1	Idler Arm ASM ●
34	114-5867	1	Anchor-Spring, Tall
35	3231-42	1	Screw-CARR
36	109-6658	2	Nut-Flange, NI
37	3231-40	1	Bolt-CARR
38	116-6317	1	Spring-Extension
39	132-5982	1	Belt-V
40	109-6938	1	Cover-Belt, LH
41	116-0094	1	Cover-Belt, RH
42	1-373034	4	Washer
43	109-6982	2	Wireform-Cover
44	126-4781-03	1	Step-Deck
45	3230-3	1	Screw-CARR
46	104-8300	1	Nut-HF, NI
47	138-6051-01	1	Plate-Baffle
48	94-7582	1	Bolt-Shoulder
49	3231-25	1	Bolt-CARR
50	109-1092	1	Knob
51	100-4852	1	Washer-Hardened
52	114-5842-01	1	Baffle
53	92-1624	2	Screw-HWH Thd Form

● Not serviced separately

Deck Decal Assembly No. 140-1169

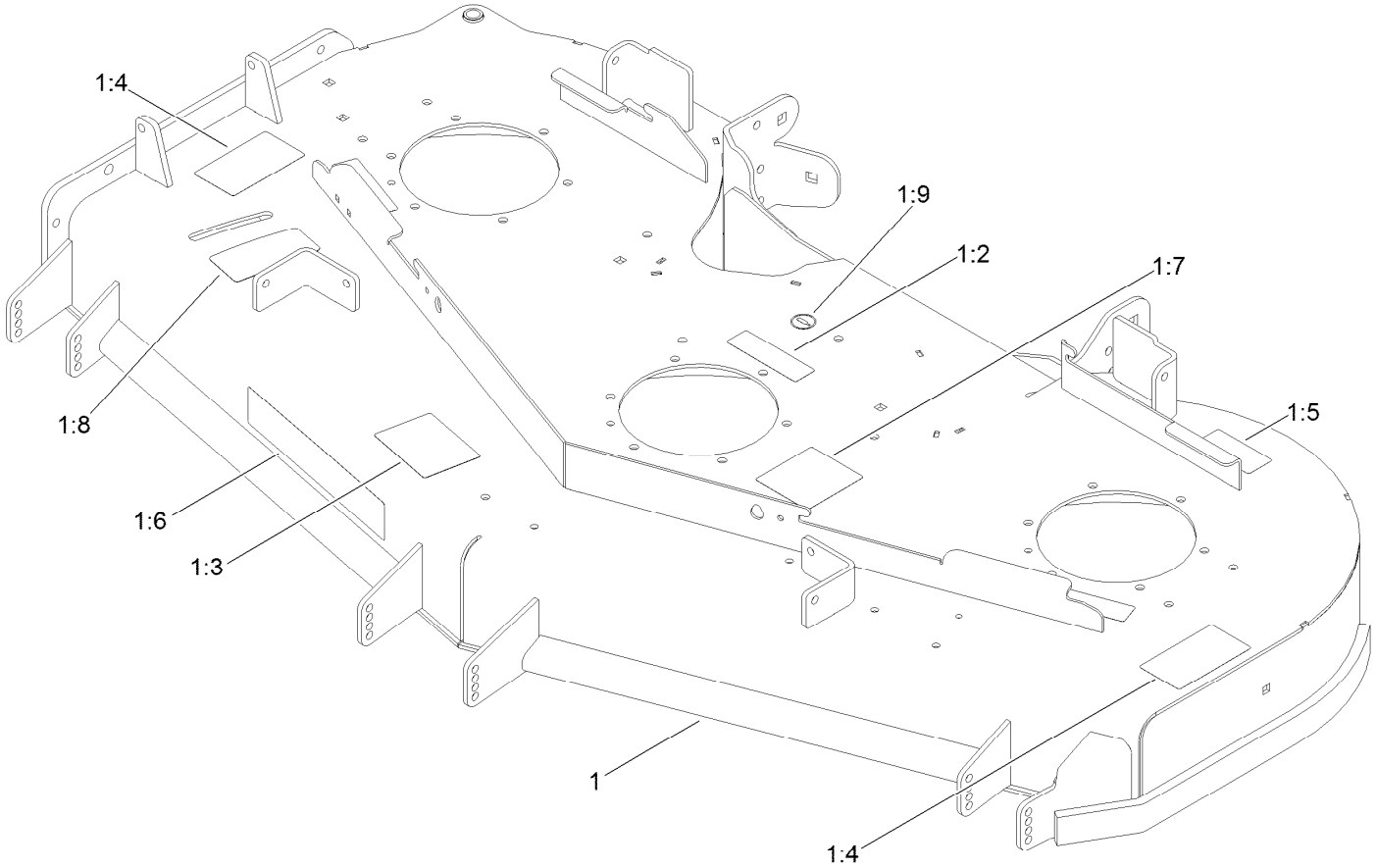

Deck Decal Assembly No. 140-1169 (continued)

Ref.	Part Number	Qty.	Description
1		1	Deck ASM ●
1:2	112-9028	3	Decal-Cover, Missing
1:3	127-0326	1	Decal-Scalp, Anti
1:4	117-3848	2	Decal-Danger
1:5	116-8283	1	Decal-Torque, Bolt
1:6	107-1619	1	Decal
1:7	136-5508	1	Decal-Routing, Deck Belt
1:8	131-1180	1	Decal-Adjustment, Baffle
1:9	58-6520	1	Decal-Grease

● Not serviced separately

Rubber Deflector Assembly No. 108-2792

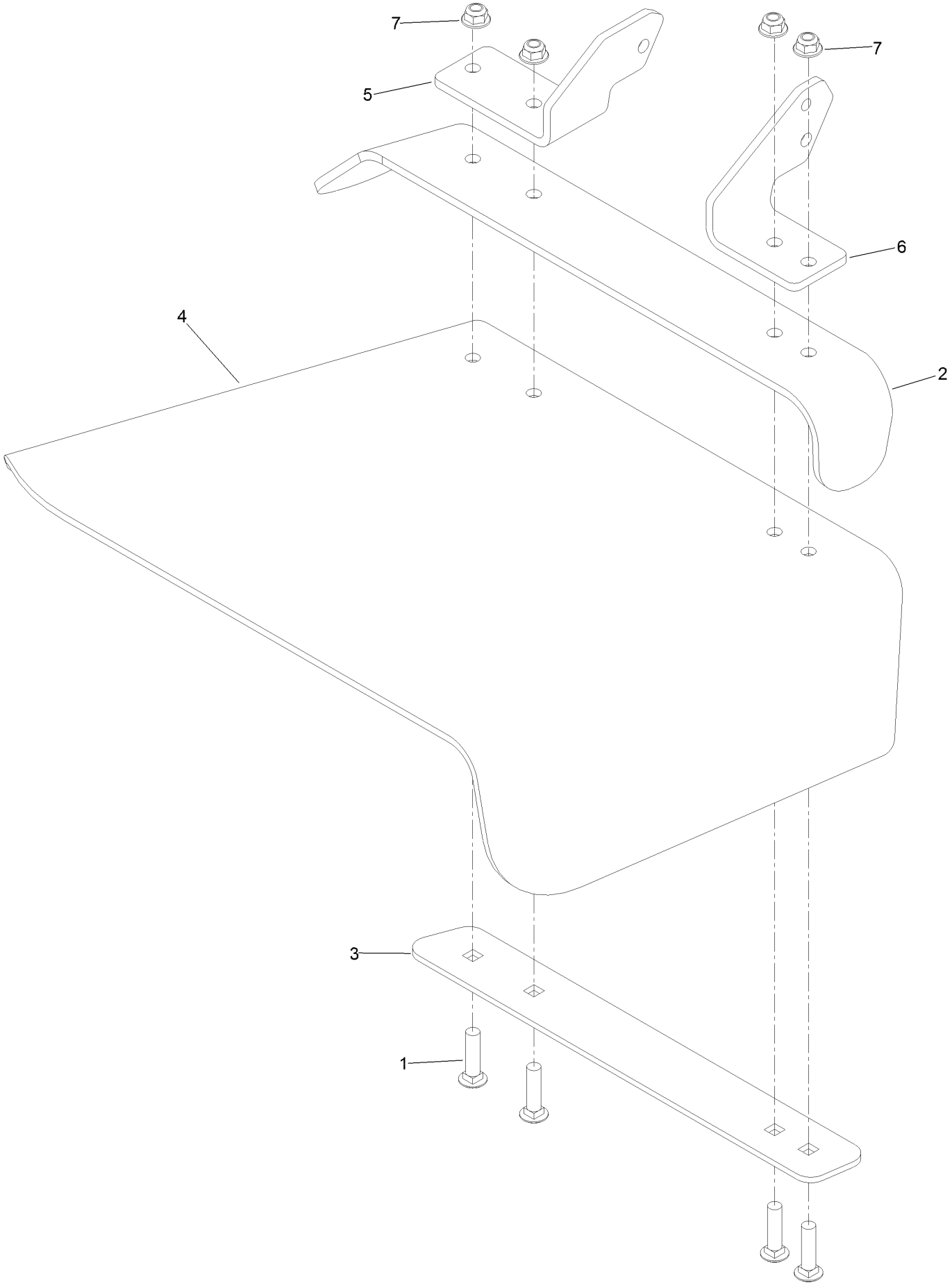

Rubber Deflector Assembly No. 108-2792 (continued)

Ref.	Part Number	Qty.	Description
1	3231-4	4	Screw-CARR
2	106-3246-01	1	Deflector
3	106-3248-03	1	Strap-Discharge
4	108-5029	1	Deflector-Rubber
5	108-4059-01	1	Plate-Hinge, Rear
6	106-3253-01	1	Plate-Hinge, Front
7	104-8301	4	Nut-HF, NI

Idler Arm Assembly

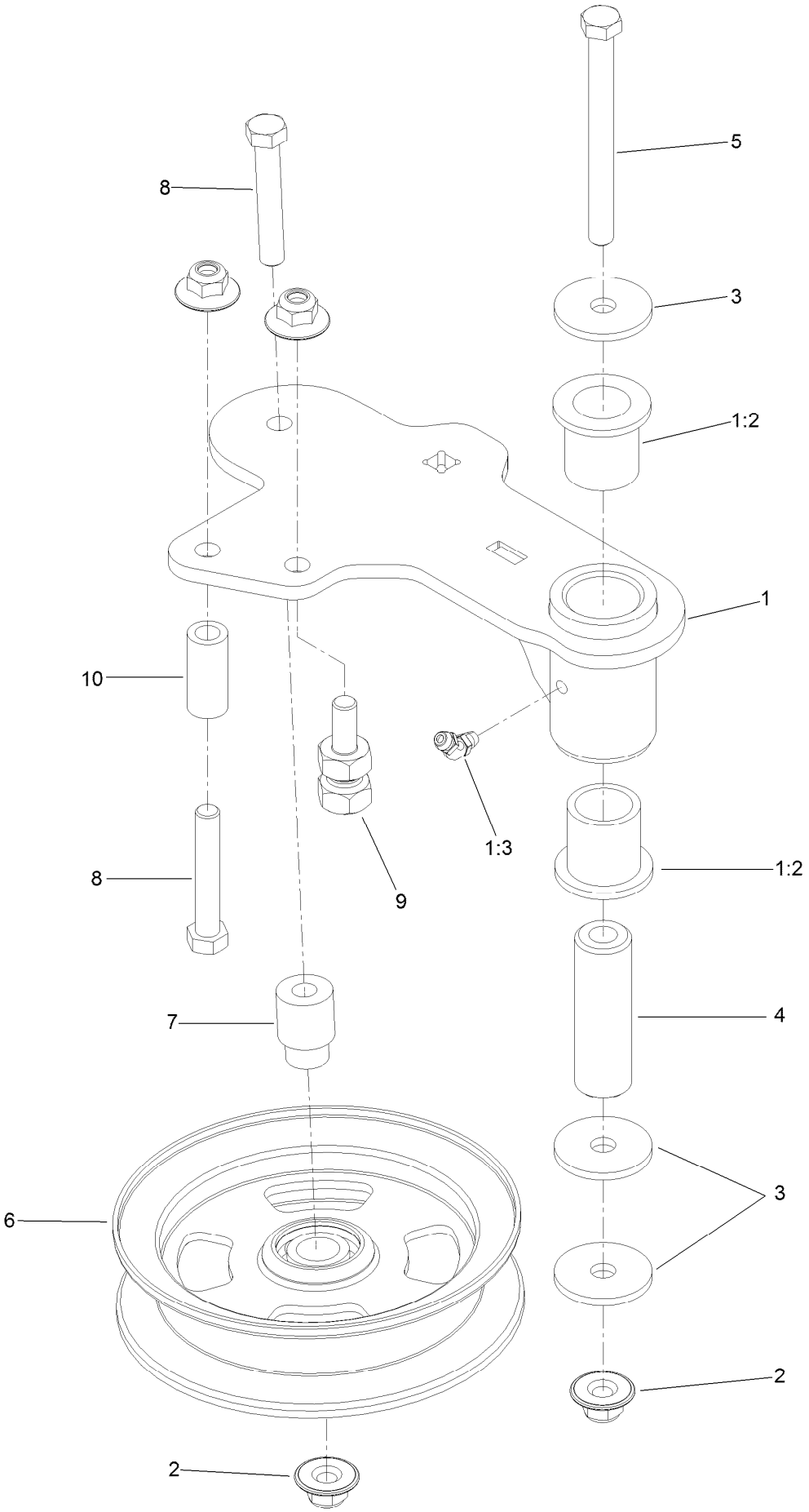

Idler Arm Assembly (continued)

Ref.	Part Number	Qty.	Description
1	114-5870	1	Idler Arm ASM
1:2	1-303514	2	Bearing-Flanged
1:3	1481	1	Fitting-Grease
2	109-6658	4	Nut-Flange, NI
3	1-213069	3	Washer
4	114-5848	1	Spacer-Plain
5	98-5961	1	Screw-HH
6	132-9425	1	Pulley-Idler, Flat
7	112-4212	1	Mount-Pulley
8	323-11	2	Screw-HH
9	132-4729	1	Anchor-Spring, Short
10	104-0151	1	Spacer

Frame Decal Assembly

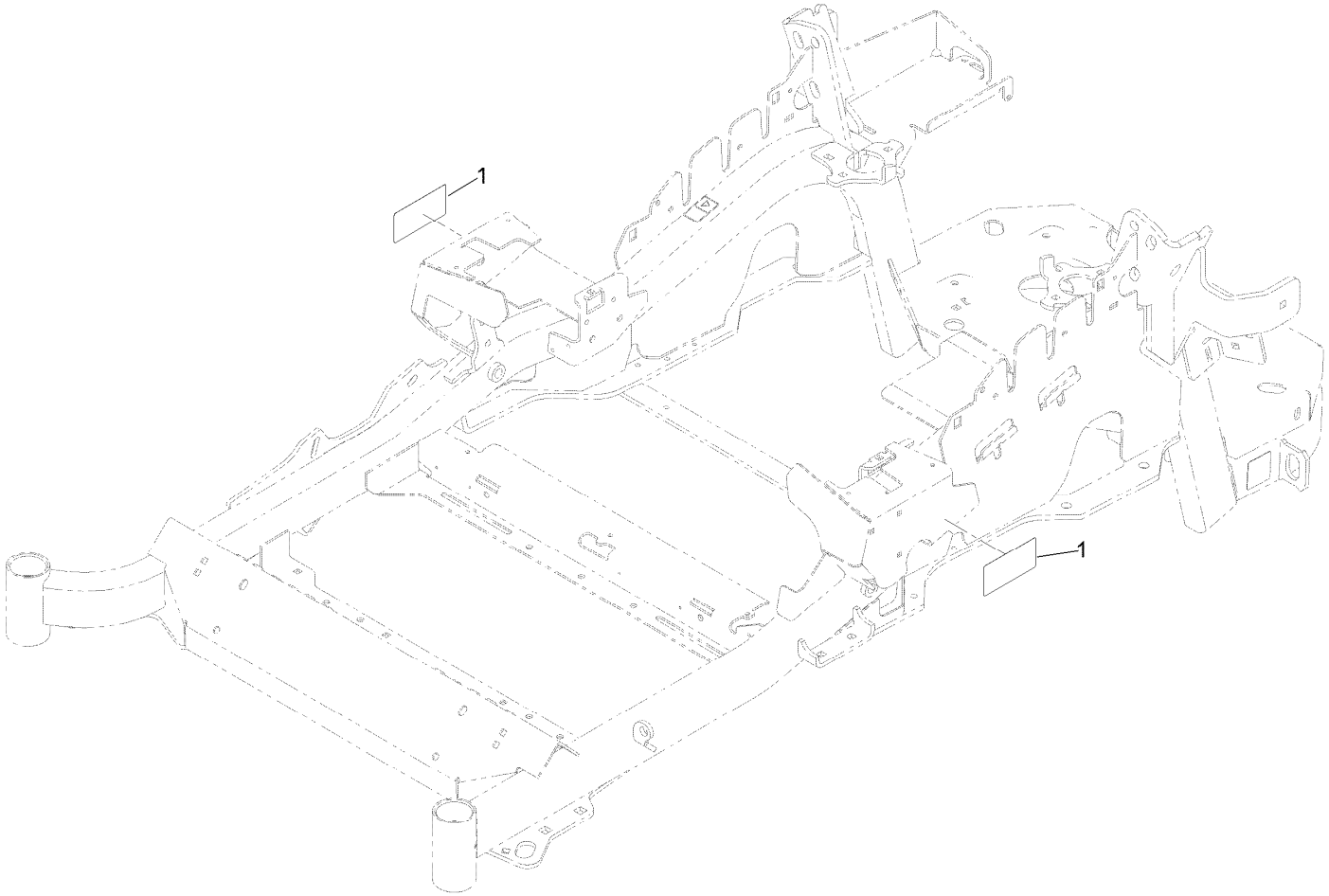

Frame Decal Assembly (continued)

Ref.	Part Number	Qty.	Description
1	120-5894	2	Decal

Attachments and Accessories

For 72910 Z Master Professional 5000 Series Riding Mower with 60in TURBO FORCE Side Discharge Mower

Product Name	Model/Part
Turbo Baffle Kit	107-1634
Anti-Scalp Kit (Trim Side)	108-4140
Hitch Kit	109-9487
Hypr-Oil 500 (quart)	114-4713
Hypr-Oil 500 (gallon)	114-4714
Hypr-Oil 500-5 (5 gallon)	114-4715
Bimini Folding Shade Assembly	115-4510
Roller Striper Kit	115-7470
Light Kit	116-1154
Seat Cover (W/arm rest)	117-0095
Operator Controlled Discharge Chute Kit	117-3600
Z Stand Kit	121-4811
Seat Tilt Frame and ISO Mount Kit	121-7596
Toro Rops Lock Kit	126-4064
Jack Kit	127-6666
Power Deck Lift Kit	132-5986
Worklight Kit	135-7320
Bucket Mount Kit	137-9216
Trimmer Mount	137-9769
Recycler Kit	139-6655
24x12n12 - Tweel Turf	139-7891
Blade-20.5 High Flow	140-1240
Blade-20.50 Atomic	140-1241
Blade-20.50 Medium Flow	140-4853
Blade-20.50, Low Flow	140-4854
Blade-20.50 Recycler	140-4855
6 Pack-Blade, 20.5 High Flow	140-4877
6 Pack-Blade, 20.5 Med Flow	140-4878
6 Pack-Blade, 20.5 Low Flow	140-4879
6 Pack-Blade, 20.5 Atomic	140-4880
6 Pack-Blade, 20.5 Recycler	140-4881
Weight Kit, Under Toe Board	140-4958
Slope Sensor-Lazer/Z-Master 3000/5000/6000	142-4910
Jack Mount Kit	146-0696
Blade-20.50 High Flow	147-6252
6 Pack-Blade, 20.50 High Flow	147-6256
Toro Rider Over Seat Bag	490-7317
Toro Deluxe Rider Cover	490-7319
Toro Rider Arm Rest Bag	490-7320
Spark Arrestor Screen	75-6880
Blower and Drive Kit	78553
E-Z Vac Triple Bagging System	78563
E-Z Vac DFS Collection System	78567
Filter Minder Gauge	99-4664
Trash Holder Kit	TC26

Notes:

Notes:

Notes:

TORO®

Count on it.