Form No. 3329–305

TORO®

Groomer Kit

Greensmaster® 3250 Cutting Unit Attachment

Model No. 04485

Installation Instructions

Note: This Groomer Kit fits cutting units models 04470 through 04473 and 04480 through 04483.

Setup

Loose Parts

Note: Use this chart as a checklist to ensure that all parts necessary for assembly have been received. Without these parts, total setup cannot be completed. Quantities listed are for three cutting units.

Description	Qty.	Use
Tapered screw	6	Mounting the reel bearing housing
Drive coupler Snap ring	3 3	Mount into the reel shaft
Plug	3	Replacing the grease fitting in the reel bearing housing
Plastic shim Spacer, 5/16 in. long Tapered socket head screw	3 6 6	Mount to the reel bearing housing
Right-hand front roller bracket assembly Left-hand front roller bracket assembly Flat washer, 5/16 in.	3 3 6	Mount to the cutting unit side plates
Groomer reel assembly Pulley spacer, 1/2 in. long Key, 1/8 in. square Driven pulley Nut, M10	3 3 3 3 6	Mounting the groomer reel to the pivot plate
Right-hand bearing housing assembly Left-hand bearing housing assembly Pivot spacer, 1-7/8 in. long Flange head screw, M10 x 70 mm	1 2 3 3	Mounting the groomer reel to the bearing housing
Right-hand drive housing assembly Left-hand drive housing assembly Drive belt	1 2 3	Mounting the drive cover housing
Screw, 1/4 x 1/2 in. Nut, 1/4 in.	6 6	Use for cutting unit models 04480 through 04483 with serial numbers 200999999 and earlier, and a 2-1/2 in. front roller

© 2002 by The Toro Company
8111 Lyndale Avenue South
Bloomington, MN 55420-1196

All Rights Reserved
Printed in the USA

Description	Qty.	Use
Right-hand link bracket	2	Mount to carrier frames if additional travel is required.
Left-hand link bracket	2	
Carriage screw	4	
Capscrew	4	
Flat washer	4	
Locknut	4	
Adapter fitting kit	1	Use when mounting Groomer Kit to a Model No. 04470, 04471, 04472 or 04473 cutting unit with a serial number of 220000001 & Up
Parts catalog	1	
Installation Instructions	1	Read before operating the machine.
Registration card	1	Fill out and return to Toro.

Caution

If you leave the key in the ignition switch, someone could accidently start the engine and seriously injure you or other bystanders.

Remove the key from the ignition and disconnect the wire from the spark plug before you do any maintenance. Set the wire aside so that it does not accidentally contact the spark plug.

1. Disconnect and remove the cutting units from the traction unit and position them on a level work surface.

2. Remove the front roller and roller brackets from the cutting unit (Fig. 1). Retain the mounting hardware.

Note: If you are mounting the Groomer Kit on a cutting unit with a serial number prior to one of those listed below, a new shoulder bolt, eccentric bolt, and nuts must be purchased before the roller can be installed with the kit.

Model No. 04480	Serial No. 60656
Model No. 04481	Serial No. 60648
Model No. 04482	Serial No. 60697
Model No. 04483	Serial No. 60985

Order the following parts from your local authorized Toro Distributor:

Shoulder bolt (1)	Part No. 95-1618
Eccentric bolt (1)	Part No. 95-1617
Locknuts (2)	Part No. 33024-00

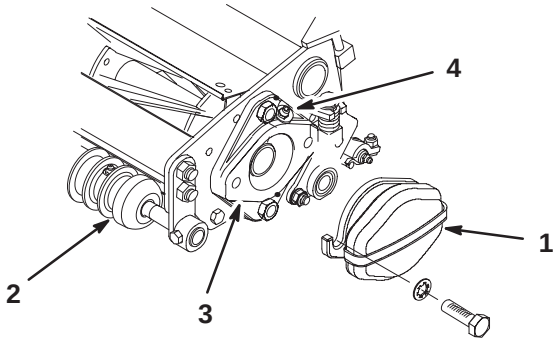

Figure 1

1. Counterweight
2. Front roller
3. Reel bearing housing
4. Grease fitting

3. Remove the front roller from the roller brackets (Fig. 1). Retain the mounting set screws.

Note: The following instructions are for installing the kit on a cutting unit with the reel motor on the right side. Unless specified, reverse the procedure for cutting units with the motor on the left side.

4. Remove the cutting unit counterweight (Fig. 1) and mounting capscrews.

5. Remove the 2 screws securing the reel bearing housing (Fig. 1) to the counterweight end of the cutting unit. If the screw heads are thick, replace them with tapered thin head screws, included in this kit.

6. Install the screws from the outside as shown in Figure 2. Secure them with the tapered nuts that were previously removed.

Note: Only replace the thick head screws on the counterweight end of the cutting unit.

7. Install the drive coupler and snap ring into the reel shaft (Fig. 2).

8. Remove the grease fitting (Fig. 1) from the reel bearing housing and replace it with a plug (Fig. 2).

9. Remove the special screw/grease fitting, flat washer, and spacer securing the drive pulley to the drive cover housing (Fig. 2). Retain all components for assembly.

10. Remove the 2 socket head screws (M5 x 20 mm) and the locknut (M8) and thin washer securing the drive cover housing to the pivot plate assembly (Fig. 2).

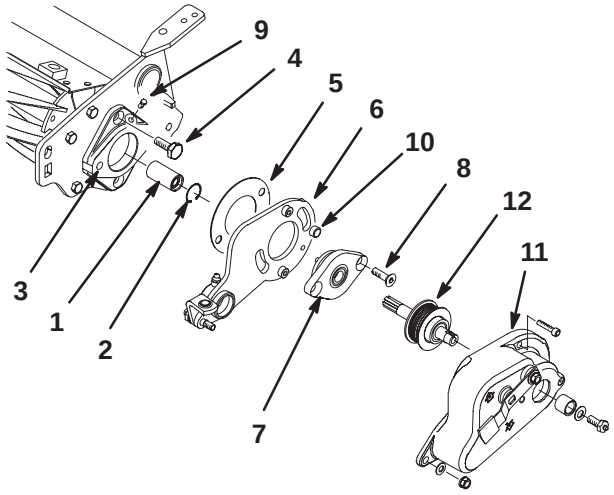

Figure 2

1. Drive coupler
2. Snap ring
3. Reel bearing housing
4. Tapered screw
5. Plastic shim
6. Pivot plate
7. Pivot plate adapter
8. Tapered socket head screw
9. Plug
10. Spacer, 5/16 in. long (2)
11. Drive cover housing
12. Drive pulley

11. Mount the plastic shim, 2 spacers (5/16 in. long), pivot plate, and pivot plate adapter to the reel bearing housing with 2 tapered socket head screws (Fig. 2). Tighten the screws firmly, but leave the pivot plate to rotate freely.

Note: The spacer must pilot through the plastic shim.

12. Loosely mount the front roller and new right-hand and left-hand roller bracket assemblies to the cutting unit side plates with the mounting hardware previously removed or new hardware and 2 new flat washers (5/16 in.) (included in this kit). Mount the roller in the Number 2 (standard) position as shown in Figure 3.

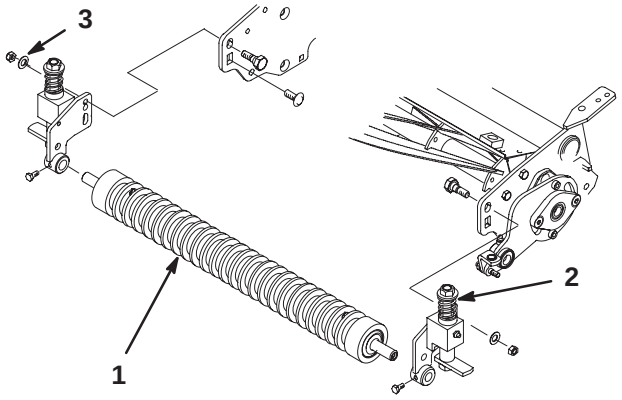

Figure 3

1. Front roller
2. Left-hand roller bracket
3. Flat washer, 5/16 in.

13. On the right side of the cutting unit, remove the capscrew securing the shield rod to the side plate (Fig. 4).

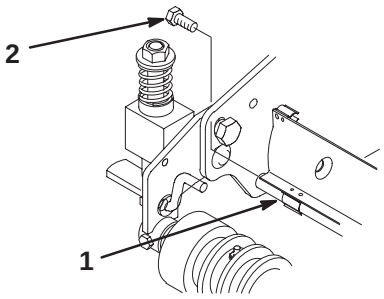

Figure 4

1. Shield rod
2. Capscrew

14. Remove the cap plug with the grease fitting from the bearing housing (Fig. 5). Retain the cap plug for assembly.

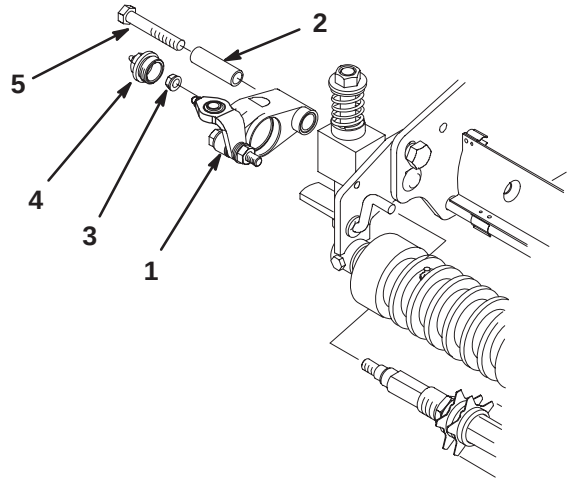

Figure 5

1. Bearing housing
2. Pivot spacer, 1-7/8 in. long
3. Locknut, M10
4. Cap plug with grease fitting
5. Flange head capscrew, M10 x 70 mm

15. Insert the non-keyed end of the groomer reel shaft into the bearing housing (Fig. 5) while inserting the keyed end of the groomer reel shaft through the pivot plate bearing (Fig. 6).

16. Insert the pivot spacer (1-7/8 in. long) through the bushings on the bearing housing (Fig. 5).

17. Insert the flange head capscrew (M10 x 70 mm) through the pivot spacer and secure it to the cutting unit side plate and shield rod (Fig. 5).

18. Secure the groomer shaft to the bearing housing with a locknut (M10) (Fig. 5).

19. Install the cap plug with the grease fitting into the hole in the bearing housing (Fig. 5).

20. Slide the pulley spacer (1/2 in. long) (Fig. 6) onto the keyed shaft end.

21. Install the key (Fig. 6) into shaft keyway and slide the driven pulley onto the shaft. Secure the assembly with a nut (M10).

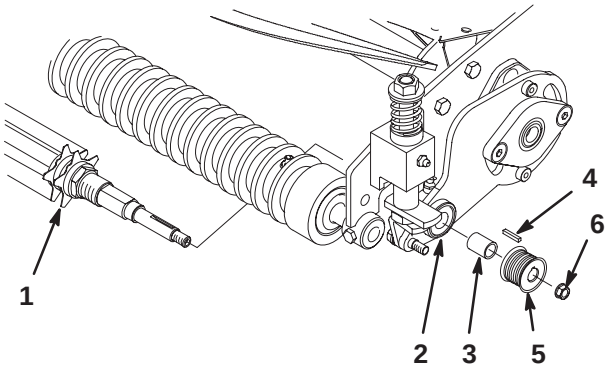

Figure 6

1. Groomer reel
2. Pivot plate
3. Pulley spacer, 1/2 in. long
4. Key
5. Driven pulley
6. Locknut, M10

22. Insert a hardened washer onto each adjusting bolt in the front roller bracket assemblies (Fig. 7 & 8).

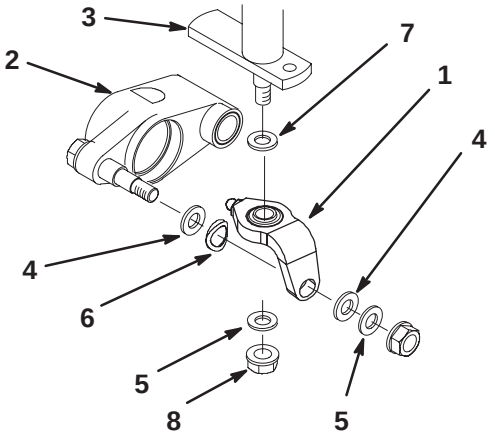

Figure 7

1. Pivot bracket (black plated)
2. Bearing housing
3. Adjusting bolt
4. Special washer, .45 I.D.
5. Flat washer, .375 I.D.x.88 O.D..
6. Wave washer
7. Hardened washer, .390 I.D. x 1.00 O.D.
8. Locknut, M8

23. Pivot the groomer reel assembly upward until the pivot brackets slide onto each adjusting bolt (Fig. 7 & 8).

Important The pivot brackets must slide easily onto the adjusting bolts. Do not use excessive force on the pivot brackets or bushings, as damage may result. If installation is difficult, check to ensure that the bushings swivel easily and are not damaged.

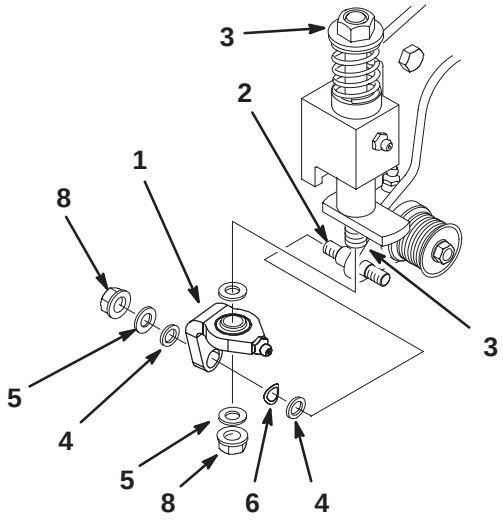

Figure 8

1. Pivot bracket (yellow plated)
2. Pivot plate stud
3. Adjusting bolt
4. Special washer, .45 I.D.
5. Flat washer, .375 I.D. x.88 O.D.
6. Wave washer
7. Hardened washer, .390 I.D. x 1.00 O.D.
8. Locknut, M8

24. Secure each pivot bracket to an adjusting bolt with a flat washer and locknut (Fig. 7 & 8).

Important Make sure that the adjusting bolts slide freely through the roller bracket housings. If binding occurs, adjust as follows:

A. Loosen the locknut on the bearing housing stud (Fig. 7) or the locknut on the pivot plate stud (Fig. 8).

B. Using the tip of a screwdriver, align the pivot bracket until the adjustment bolt slides freely.

C. If tension on the wave washer is loose, move one of the special washers to the other side of the assembly to keep tension on the wave washer.

25. While lightly pulling forward on the front roller, rotate the upper, right roller bracket mounting bolt (eccentric) until the identification dot is positioned midway between up and down. Tighten both locknuts securing the roller bracket to the right sideplate (Fig. 9).

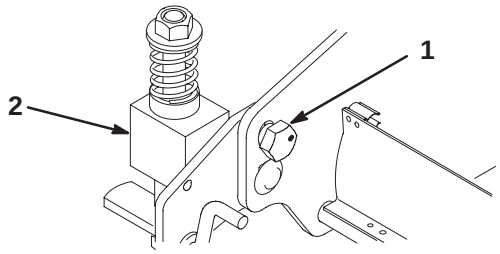

Figure 9

1. Eccentric mounting bolt
2. Right-hand roller bracket

26. While lightly pulling forward on the front roller, tighten both locknuts securing the roller bracket to the left sideplate.

27. Insert the splined end of the drive pulley shaft through the adapter plate into the drive coupling (Fig. 10).

28. Install the groomer drive belt onto the drive and driven pulleys.

29. Lift and rotate the idler control lever onto the pin (disengaged position) on the drive cover housing.

30. Position the drive cover housing over the drive pulley shaft, pulleys, and onto the pivot plate stud (Fig. 10).

Note: Make sure the back side of the belt is against the idler pulley in the drive cover housing.

31. Secure the drive cover housing to the pivot plate with 2 socket head screws (M8 x 20 mm) (Fig. 10). Also, secure the housing to the pivot plate stud with a locknut (M8) and thin washer.

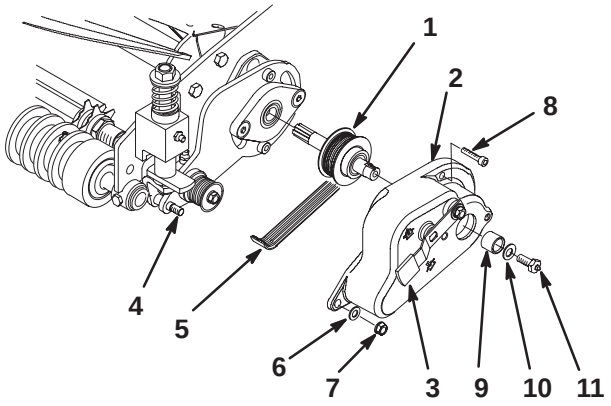

Figure 10

1. Drive pulley
2. Drive cover housing
3. Idler control lever
4. Pivot plate stud
5. Drive belt
6. Thin washer
7. Locknut, M8
8. Socket head screw, M5 x 20 mm
9. Spacer, 5/8 in. long
10. Thick washer
11. Screw w/grease fitting

32. Insert a spacer onto the drive shaft and secure it with a flat washer and special screw w/grease fitting (Fig. 10).

33. For cutting unit models 04480 through 04483 with serial numbers 200999999 and earlier, and a 2-1/2 in. front roller, add a screw (1/4 x 1/2 in.) and nut (1/4 in.) to the hole in the right and left-hand roller bracket assemblies (Fig. 11).

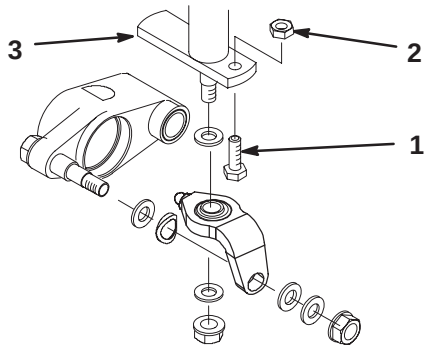

Figure 11

1. Screw, 1/4 x 1/2 in.
2. Nut, 1/4 in.
3. Left-hand roller bracket assembly

34. Grease the 5 groomer fittings.

35. When installing the groomer kit and cutting unit on a Greensmaster 3200 traction unit, install the Pull Link Kit, Toro Part No. 94-9630, per the instructions supplied with the kit, but do not use the center extension in kit (Fig. 12). Adjust the pull link to the shortest length.

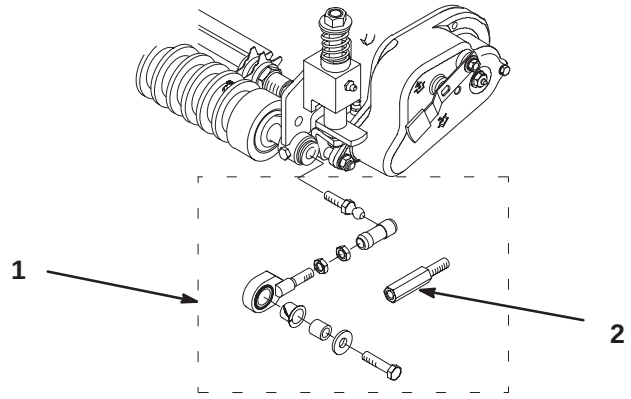

Figure 12

1. Pull link kit
2. Center extension (not used)

36. When installing the groomer kit and cutting unit on a Greensmaster 3000 or 3100 traction unit, install the Groomer Adapter Kit, Toro Part No. 98-1463, per the instructions supplied with the kit.

37. When installing the groomer kit and cutting unit on a Greensmaster 3250 traction unit, additional travel can be attained by installing extension brackets to the **front** carrier frames (steps 38 through 41).

38. Mount the appropriate link bracket (right-hand or left-hand) and an anti-scalp roller to the end of each **front** carrier frame with a roller shaft and carriage screw. Position the brackets as shown in Figure 13.

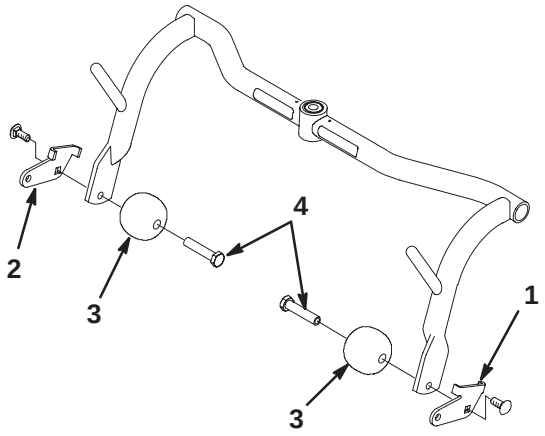

Figure 13

1. Left-hand link bracket
2. Right-hand link bracket
3. Roller
4. Roller shaft

39. Mount a pull link assembly to the outside of each link bracket with a capscrew, flat washer, nylon bushing, spacer, washer, and locknut. Position the components as shown in Figure 14. Make sure that the nylon bushing is in the pull link.

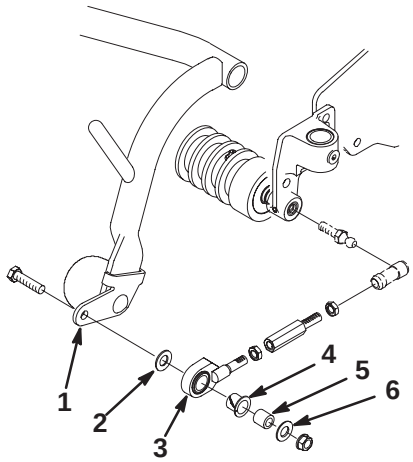

Figure 14

1. Left-hand link bracket
2. Flat washer
3. Pull link assembly
4. Nylon bushing
5. Spacer
6. Washer, thick

40. Remove the pull arm extensions (Fig. 15) before installing the groomer in the rear (#1) position. Assemble to the dimension shown in Figure 15. (Pull arm extension removed).

41. Adjust the pull links until there is 1/4 to 3/8 in. clearance between the lip of the basket and the reel blades. Make sure the basket lips are equidistant from the reel blades all the way across the reel blades.

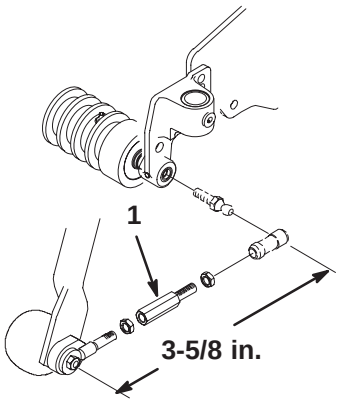

Figure 15

1. Rear pull arm extension

Operation

Grooming is performed above the soil level. Grooming promotes vertical growth of the grass by cutting runners (stolons), removing thatch, and encouraging denser growth and deeper rooting. This can, in effect, yield a more even grass with less grain for faster and truer action of the golf ball.

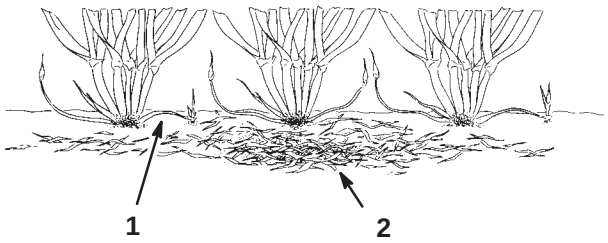

Figure 16

1. Grass runners
2. Thatch

Grooming is similar to verti-cutting in its runner cutting action. However, grooming blades should never penetrate the soil like verti-cutting or dethatching. Groomer blades are spaced closer together and are used more often than verti-cutters so that they are more effective in cutting runners and removing thatch. Verti-cutters are used primarily for greens renovation while groomers are used for ongoing greens upkeep.

It is difficult to make precise recommendations on the use of grooming reels because so many variables affect the performance of grooming, including:

- The time of the year (i.e., the growing season) and weather pattern
- The general condition of each green
- The frequency of grooming/cutting—both how many cuttings per week and how many passes per cutting
- The height of cut setting on the main reel
- The height/depth setting on the grooming reel
- How long the grooming reel has been in use on this green
- The type of grass on the green
- The overall greens management program (i.e. irrigation, fertilizing, spraying, coring, over seeding, etc.)
- The traffic on the green
- Stress periods (i.e., high temperatures, high humidity, unusually high traffic)

These factors can vary from golf course to golf course and from green to green. Therefore, it is important to inspect the greens frequently and vary the grooming practice in accordance with the need.

The groomer is set at the factory with 1/2 in. blade spacing. By removing spacers and adding blades or adding spacers and removing blades, the groomer can be changed to 1/4 or 3/4 in. spacing.

Grooming with 1/4 in. blade spacing is recommended for fast growth periods (spring through early summer). Grooming with 3/4 in. blade spacing is recommended for slower growth periods (late summer through fall and winter). During high stress periods it may be desirable to not use the grooming reel.

Note: Grooming with 1/4 in. blade spacing will tend to remove more grass blades and thatch and cut more runners than grooming with 1/2 or 3/4 in. blade spacing. If grooming with 1/4 in. blade spacing, one or two groomings per week will probably be sufficient except during maximum growth periods.

Note: The practice of changing the direction of cut each time the green is cut should be continued when a groomer is used. This rotation will enhance the effects of the grooming.

Controls

Idler Control Lever

The idler control lever (Fig. 17) is used to engage and disengage the grooming reel. Do not engage the groomer while the cutting unit is running.

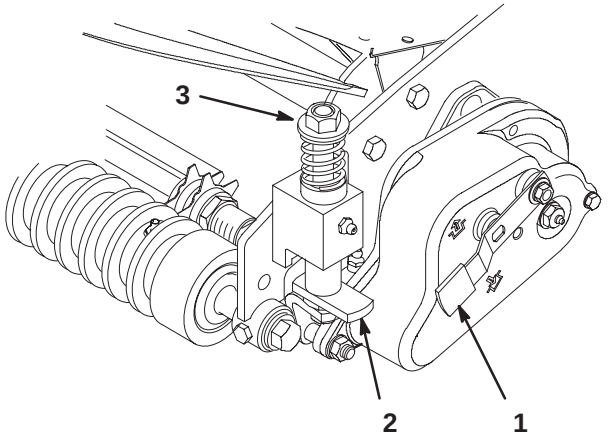

Figure 17

1. Idler control lever
2. Quick adjust lever
3. Adjusting bolt

Adjusting Bolt

The adjusting bolt (Fig. 17) is used to adjust the grooming reel depth/height.

Groomer Quick Adjust Lever

The groomer quick adjust lever (Fig. 17) is used in conjunction with the adjusting bolt to attain higher settings. It is also used to raise the grooming reel when grooming is not desired. Press down on the lever and rotate it to the front or side to raise or lower the grooming reel.

Adjusting the Depth/Height

1. Make sure that the cutting unit rollers are clean.
2. Turn the cutting unit over and position it on a work surface.
3. Set the front roller brackets in the standard (#2) position and level the front roller; refer to the Cutting Unit Operator's Manual for the leveling procedure.
4. Adjust the cutting unit to the desired height-of-cut; refer to the chart below for available groomer settings at various cutting unit heights of cut.

Cutting Unit Height-of-Cut (inch)	Groomer Depth/Height Settings (inch)	
	Deepest	Highest
0.25	–0.1	+0.31
0.15	–0.125	+0.27
0.1	–0.14	+0.25

5. Rotate the quick adjust lever to the Down position for deeper settings and to the Up position for higher settings.

Note: Negative values indicate groomer blade penetration below the roller level. Positive values indicate groomer blade penetration above the roller level. Zero is the roller level.

Important If the front roller brackets are positioned in either the #1 or #3 positions, the groomer settings will shift upward or downward respectively.
Mowing/Grooming with the roller brackets set in the #4 position is not recommended.

6. On one end of the cutting unit, place a gauge bar across the front and rear rollers. Measure the distance from the lowest tip of a groomer blade to the gauge bar.
7. Repeat step 6 on the other end of the groomer reel. Go back to the first side and check/adjust the depth/height setting.
8. Install the cutting unit on the traction unit.

Testing the Groomer Performance

Important Improper or over-aggressive use of the grooming reel (i.e., too deep or too frequent grooming) may cause unnecessary stress on the turf leading to severe greens damage. Use the groomer cautiously.

Danger

Contact with the reels or other moving parts can result in personal injury.

- **Before making any adjustments to the cutting units, disengage the reels, set the parking brake, stop the engine, and remove the ignition key.**
- **Keep fingers, hands, and clothing away from the reels or other moving parts.**

It is important to determine the performance of the groomer before putting it into regular use on greens. We suggest that a formal test procedure be used. The following is a practical way of determining the proper height/depth setting:

1. Set the main cutting reels to the height of cut that would normally be used without the grooming reel. Use a Wiehle roller on the front and a full roller with scrapers on the rear (a Wiehle roller can be used on the rear at height of cut settings 3/16 in. or below but this may result in a slightly deeper cut).
2. Set each of the grooming reels at a different setting as follows:
   A. One groomer 1/32 in. above the roller level
   B. One groomer set to approximately one half the cutting unit height of cut setting
   C. One groomer disengaged and raised into the transport position
3. Make a pass over the test green and look at the results. The cutting unit with the groomer set at one half the cutting unit height of cut will have removed more grass and thatch than the cutting unit with the groomer disengaged. The reel with the groomer set 1/32 in. above the roller level will have removed significantly more grass and thatch than the other two reels.
4. Examine the test green and determine if one of the two groomed areas gives the desired results. If not, lower and engage the third groomer, increase or decrease the height/depth of the groomers, and make another test pass. The amount of grass removed is a key indicator in determining the height/depth setting of the grooming reel.

Check the test green 2 or 3 days after the first grooming for general condition/damage. If the groomed areas are turning yellow/brown, and the non-groomed areas are green, then the grooming was too aggressive.

Note: The color of the grass will change when the grooming reel is used. This can be observed with the first grooming and will continue over time. Experience will allow the greens superintendent to judge by color of the turf (along with close examination) if the current grooming practice is appropriate for the particular green. Because the grooming reel stands up more grass and removes thatch, the quality of the cut will not be the same as without the groomer. This effect is most noticeable the first few times a groomer is used on a green.

Note: On multiple passes (i.e., double and triple cutting), the groomer will continue to penetrate deeper on each successive pass. Multiple passes are not recommended.

5. After testing the performance of the groomer on a test green and satisfactory results are obtained, grooming on the playing greens can begin. However, it is important to realize that each green may respond differently to grooming. In addition, growing conditions are constantly changing. Inspect the groomed greens frequently and make adjustments to the grooming procedure as often as necessary.

Installing the Grass Baskets

The grooming reel will increase the amount of grass and thatch picked up. This means the grass baskets will have to be emptied more often.

To install the baskets:

1. Adjust the grooming reel to the maximum height.
2. Rotate the adjusting rods (Fig. 18) so that the top of each rod is 1/8 in. above the tops of the grooming reel blade. Tighten the adjusting rod nuts.
3. Readjust the groomer height/depth.
4. Install the baskets.

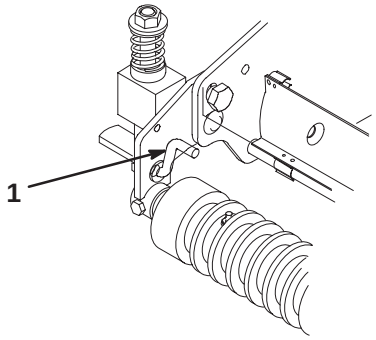

Figure 18

1. Adjusting rod

Rollers

If the grooming reels are set to a negative depth relative to the rollers, the groomer will penetrate deeper than the cutting unit. Because of this, the groomer will cut into the base of the grass blade which is stickier. Grass will tend to build up on the rear roller faster than without the groomer. A rear roller scraper or rear roller brush is strongly advised when grooming reels are used.

A Wiehle roller is recommended on the front when using a grooming reel.

Note: A Wiehle roller scraper is available for Model No. 04470, 04471, 04472 or 04473 cutting units when equipped with groomers and 2.00” dia. front rollers only.

A Wiehle roller can also be used on the rear to avoid grass build up if the height of cut is at or below 3/16 in. If the height of cut is set over 3/16 in., then a full roller with scrapers or rear roller brush is advised.

Maintenance

Cleaning

Hose off the grooming reel after using it. Do not direct the water stream directly at the groomer bearing seals. Do not permit the grooming reel to stand in water so that the components rust.

Lubrication

If the groomer is used every day, lubricate the 7 grease fittings weekly. Use a hand pump or grease gun (2 or 3 pumps maximum) (Fig. 19). Do not over-grease as excess grease may cause seal failure.

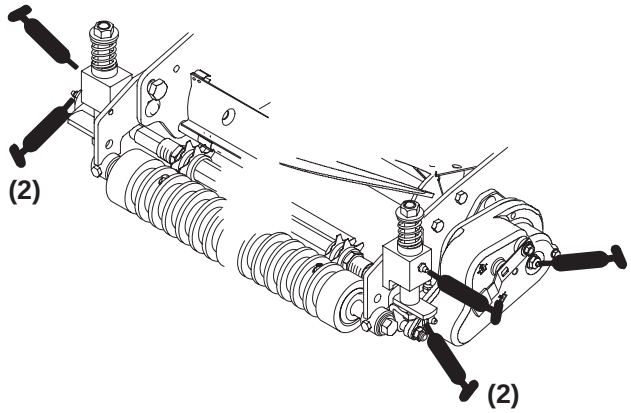

Figure 19

Inspecting the Blade

Inspect the grooming reel blades frequently for damage and wear. Bent blades may be straightened with a pliers. Either replace worn blades or reverse the blades on the shaft to put the sharpest blade edge forward. When inspecting the blades, check to see that the right and left blade shaft end nuts are tight.

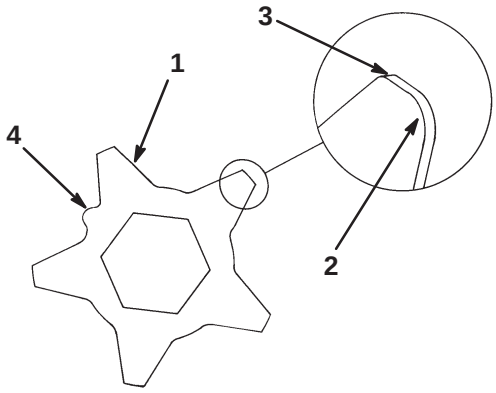

Figure 20

1. Grooming blade
2. Sharp edge
3. Dull (rounded) edge
4. Location mark

Note: Because the groomer may introduce more debris (i.e., dirt and sand) into the cutting unit than what the reel would normally be exposed to, the bedknife and main reel should be checked for wear more frequently. This is especially important in sandy soil and/or when the groomer is set for penetration.

Grooming Reel Replacement

The grooming reel can be removed to replace individual blades, reverse the blades, or replace the entire shaft. Remove and replace the grooming reel shaft using the following procedure:

1. From the drive side of the cutting unit, remove the groomer drive cover housing, drive belt, driven pulley nut, pulley, key and spacer (Fig. 21).

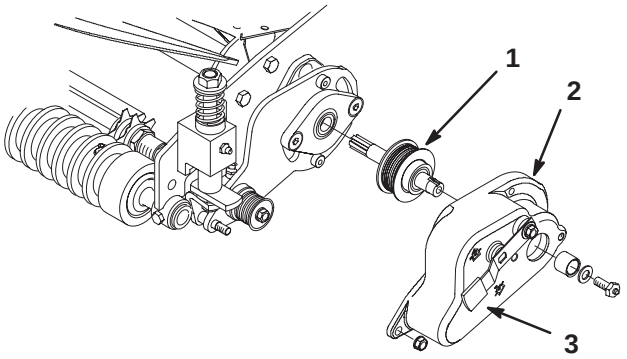

Figure 21

1. Drive pulley
2. Drive cover housing
3. Driven pulley

2. On the opposite end of the cutting unit, remove the cap plug w/grease fitting, locknut retaining the reel shaft to the bearing housing, capscrew, and spacer retaining the bearing housing to the cutting unit (Fig. 22). Remove the groomer reel assembly.

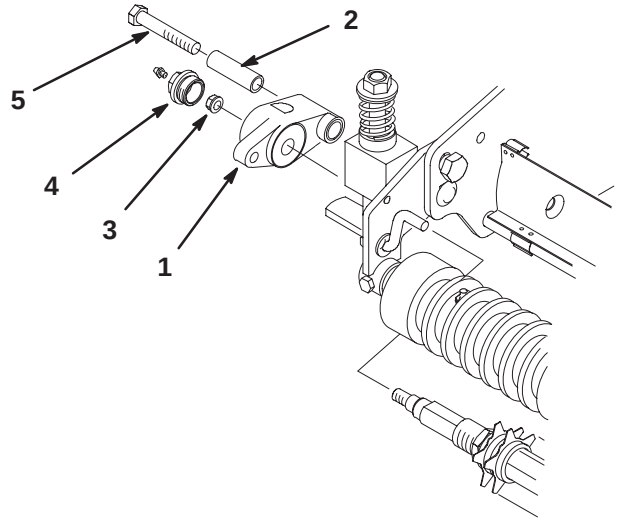

Figure 22

1. Bearing housing
2. Pivot spacer
3. Locknut
4. Cap plug w/grease fitting
5. Capscrew

---

3. Assemble the shaft in reverse order. Using the location marks on each blade as a guide, assemble each blade so the location mark is offset one flat on the hexagonal shaft.

Note: The location marks on each blade are offset so they can be used to achieve proper grooming reel setup. Stack the blades and match the location marks before installing them on the groomer reel shaft.

4. Using a hand pump grease gun, lubricate the grooming reel shaft bearings with 2–3 pumps of grease.

5. Check the grooming reel height/depth setting.


TORO®