Form No. 3329-321

13-32
Rear Engine Rider
Model Nos. 70125 and 70184

Setup Instructions

Loose Parts

Description	Qty.	Use
Wheels	2	Installing the front wheels
Flat washers, M16 (3 mm thick)	2	
Spacers, M16 (1 mm thick)	4	
Cotter pins	2	
Seat	1	Installing the seat
Screws, M8 x 18 mm	4	
Flat washers, M9	4	
Lock washers	4	
Socket pin	1	Attaching the steering wheel
Engine cover	1	Installing the engine cover
Screws, M6 x 25 mm	2	
Frame	1	Assembling the grass collector
Fabric bag with clips	1	
Handle	1	
Locknuts, M8	2	
Washers, M9	4	
Z-brackets	2	Installing the grass collector
Bolts, M6 x 16.2 mm	2	
Nuts, M6	2	
Grass collector cover	1	
Pins	2	
Full bag lever	1	
Bolts, M6 x 20 mm	2	Installing the battery
Flat washers, M6.5	4	
Nuts, M6	2	
Recycler® cover	1	Recycling the grass clippings; refer to the tractor *Operator's Manual*
Draining funnel	1	Draining the engine oil
Keys	2	Using the keys in the ignition and KeyChoice® switches
Operator's Manual	1	Reading before operating the tractor.
Engine operator's manual	1	

© 2002 by The Toro Company
8111 Lyndale Avenue South
Bloomington, MN 55420-1196

All Rights Reserved
Printed in Italy

Assembling the Tractor

Installing the Front Wheels

1. Slide a flat washer (M16, 3mm thick) onto each spindle (Fig. 1).

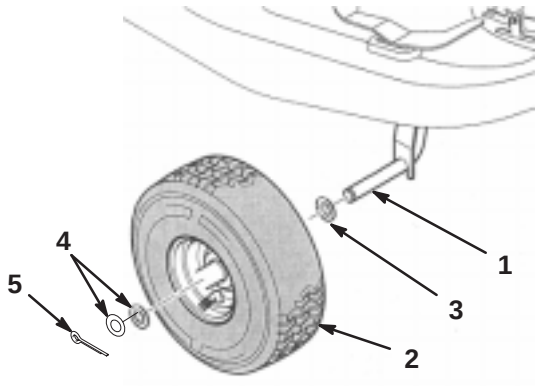

Figure 1

1. Spindle
2. Wheel
3. Flat washer (M16, 3 mm thick)
4. Spacers (M16, 1 mm thick)
5. Cotter pin

2. Mount the wheels and secure each of them with 2 spacers (M16, 1 mm thick) and a cotter pin (Fig. 1).

3. Grease the wheels.

Installing the Seat

Attach the seat to the support plate with 4 flat washers (M9), lock washers, and screws (M8 x 18 mm) (Fig. 2).

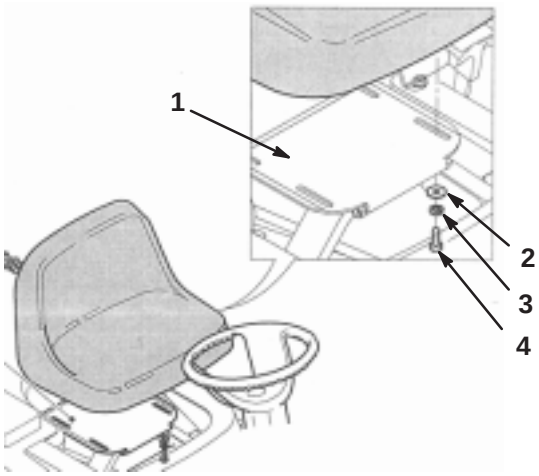

Figure 2

1. Seat Support plate
2. Flat washer (M9)
3. Lock washer
4. Screw (M8 x 18 mm)

Note: Before tightening the screws, adjust the seat to a position that is most comfortable for you.

Attaching the Steering Wheel

1. Rotate the steering wheel upward until it is aligned with the steering column.

2. Secure the steering wheel with the socket pin (Fig. 3).

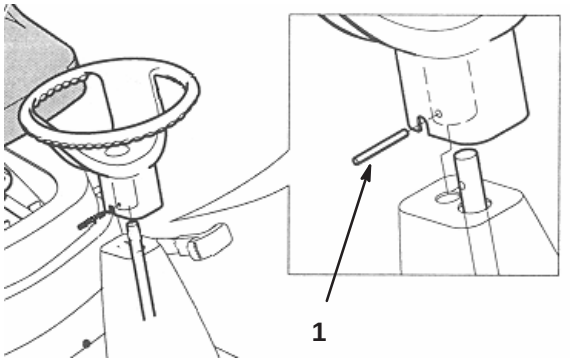

Figure 3

1. Socket pin

Installing the Engine Cover

1. Slide the tabs on the engine cover into the slots on the body of the tractor (Fig. 4).

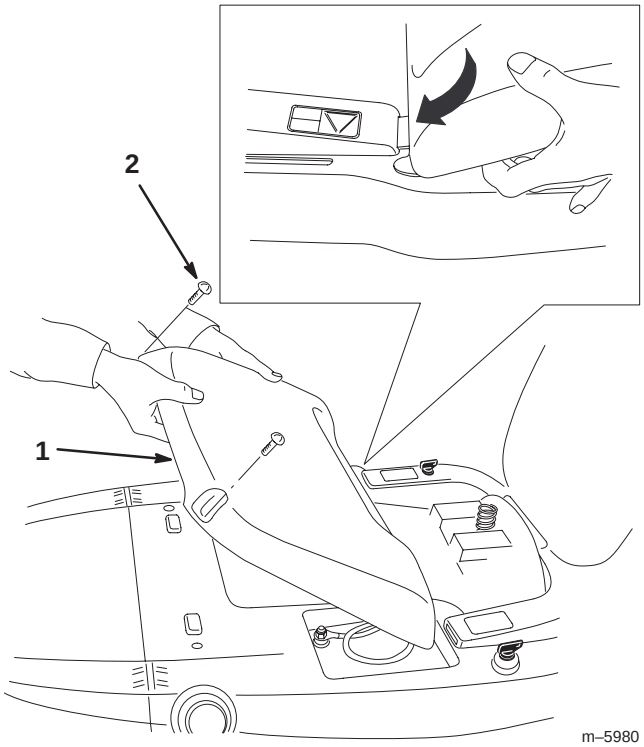

Figure 4

1. Engine cover
2. Screw

2. Secure the cover with 2 screws (M6 x 25 mm) (Fig. 4).

Assembling the Grass Collector

1. Slide the bag onto the frame and secure it with the clips (Fig. 5).

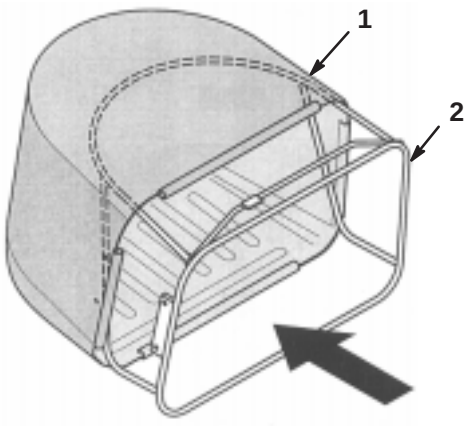

Figure 5

1. Bag
2. Frame

2. Secure the handle to the bag assembly with 4 washers (M9) and 2 locknuts (M8) (Fig. 6).

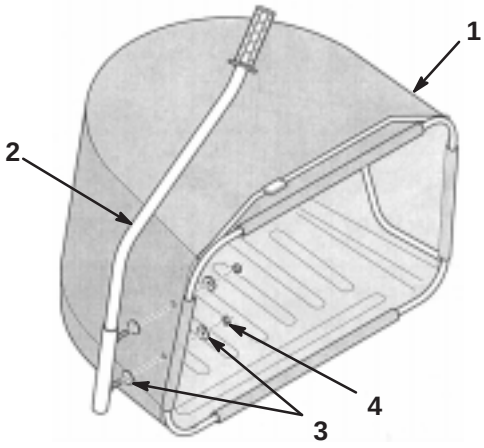

Figure 6

1. Bag assembly
2. Handle
3. Washer (M9)
4. Locknut (M8)

Installing the Grass Collector

1. Reach beneath the rear of the tractor and hold the full bag switch and switch plate while removing the 2 screws on the rear panel (Fig. 7).

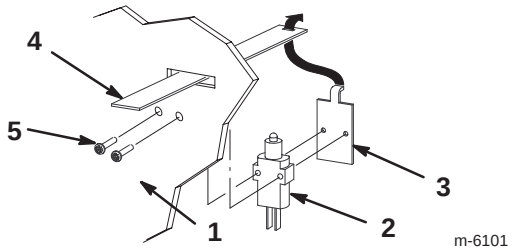

Figure 7

1. Rear panel
2. Switch
3. Switch plate
4. Full bag lever
5. Screw

2. Hold the switch plate against the switch and slide the full bag lever into the rectangular slot on the rear panel.

3. Hook the switch plate onto the lever and secure the switch and switch plate to the rear panel with the 2 screws (Fig. 7).

4. Attach the grass collector to the rear of the tractor with 2 Z-brackets, bolts (M6 x 16.2 mm), and nuts (M6) (Fig. 8).

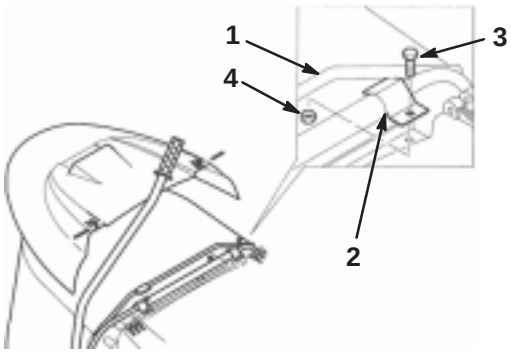

Figure 8

1. Grass collector
2. Z-bracket
3. Bolt (M6 x 16.2 mm)
4. Nut (M6)

5. Attach the grass collector cover to the tractor with 2 pins (Fig. 9).

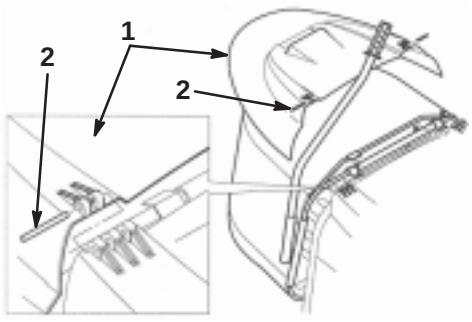

Figure 9

1. Grass collector cover
2. Pin

Activating the Battery

Purchase bulk electrolyte with 1.260 specific gravity from a local battery supply outlet.

Danger

Battery electrolyte contains sulfuric acid, a deadly poison that can cause severe burns.

- **Do not drink electrolyte and avoid contact with skin, eyes or clothing. Wear safety glasses to shield your eyes and rubber gloves to protect your hands.**
- **Fill the battery where clean water is always available for flushing the skin.**
- **Follow all instructions and comply with all safety messages on the electrolyte container.**

1. Remove the battery from the tractor and place it on a level surface; refer to Removing the Battery in the *Operator's Manual*.

Important Never fill the battery with electrolyte while the battery is installed in the tractor. You could spill electrolyte on other parts and cause corrosion.

2. Clean the top of the battery with a paper towel.
3. Remove the vent caps from the battery (Fig. 10).

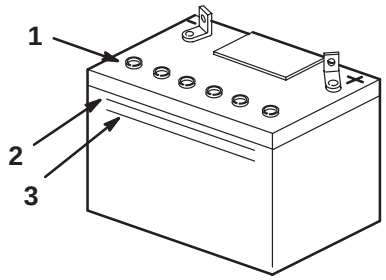

m-5004

Figure 10

1. Vent caps
2. Upper line
3. Lower line

4. Slowly pour electrolyte into each battery cell until the electrolyte level is up to the Upper line on the battery case (Fig. 10).

Important Do not overfill the battery because electrolyte (sulfuric acid) can severely corrode and damage the chassis.

5. Wait 5 to 10 minutes after filling the battery cells, then add electrolyte, if necessary, until the electrolyte level is up to the upper line (Fig. 10) on the battery case.
6. Install the battery vent caps.
7. Charge the battery for 1 hour at 25 to 30 amps or 6 hours at 4 to 6 amps. Do not overcharge the battery.

Warning

Charging the battery produces gasses that can explode.

Never smoke near the battery and keep sparks and flames away from battery.

8. When the battery is fully charged, unplug the charger from the electrical outlet, then disconnect the charger leads from the battery posts (Fig. 11).

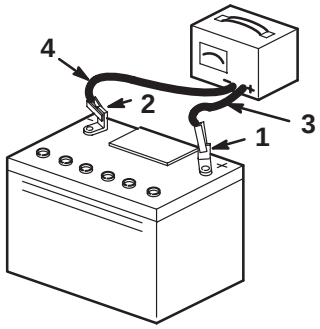

Figure 11

1. Positive post
2. Negative post
3. Charger red (+) wire
4. Charger black (–) wire

9. Install the battery in the tractor and connect the battery cables; refer to Installing the Battery in the *Operator's Manual*.

Checking the Engine Oil Level

Before you start the engine and use the tractor, check the oil level in the engine crankcase; refer to Checking the Oil Level in the *Operator's Manual*.

Filling the Fuel Tank

Add fuel to the fuel tank; refer to Filling the Fuel Tank in the *Operator's Manual*.

Checking the Tire Pressure

Check the front and rear tires for proper inflation; refer to Checking the Tire Pressure in the *Operator's Manual*.

Testing the Safety System

Test the safety interlock system; refer to The Safety Interlock System in the *Operator's Manual*.