Form No. 3446-279 Rev D

TORO®

Count on it.

Parts Catalog

# Groundsmaster® 3500-D

## Rotary Mower

**Model No. 30807—Serial No. 409400000 and Up**

Register at www.Toro.com.
Original Instructions (EN)

CE

*3446-279* D

# Ordering Replacement Parts

To order replacement parts, please supply the part number, the quantity, and the description of each part desired.

### Understanding Reference Numbers

Each identified part in an illustration has a reference number. The reference number for a part also appears in the parts list, along with other information about the part.

This catalog uses two special reference number formats, one to indicate parts in a service assembly and another to indicate the quantity of a given part in an illustration.

### Service Assembly Reference Numbers

Parts in service assemblies have reference numbers in the form a:b. The a represents the reference number of the entire service assembly and the b represents a sequential number unique to each part within the service assembly.

For example, a wheel assembly might be identified by reference number 6, the tire by 6:1, the valve by 6:2, and the wheel by 6:3. When you order the assembly identified by reference number 6, you receive all parts identified by reference numbers 6:1,6:2, and 6:3. However, you may also order any part individually. Reference numbers of this type appear in illustration and in parts lists.

### Reference Numbers Indicating Quantity

In an illustration, if a reference number indicates more than one part, the reference number has the form nX y. The n represents the quantity of the part, the X is the multiplication symbol, and the y represents the reference number.

For example, in an illustration, the reference number 2X 37 means that two of the parts identified by reference number 37 are indicated.

# Contents

Frame and Roll-Over Protection System Assembly . . . 5
Engine Installation Assembly . . . 6
Air Cleaner and Exhaust Assembly . . . 8
Air Cleaner Assembly No. 93-2190 . . . 9
Radiator and Oil Cooler Assembly . . . 10
Rear Lift Arm and Carrier Frame Assembly . . . 11
Hydraulic Cylinder Assembly No. 112-9916 . . . 12
Sidewinder Carrier Assembly . . . 13
Scissor Frame and Link Assembly . . . 15
Hydraulic Motor and Foot Guard Assembly . . . 16
Gear Motor Assembly No. 117-5141 . . . 17
Fuel Tank Assembly . . . 18
Hydraulic Tank and Filter Assembly . . . 19
Battery Assembly . . . 20
Seat Assembly . . . 21
Seat and Track Assembly No. 139-2679 . . . 22
Seat Assembly No. 139-2700 . . . 23
Control Panel Assembly . . . 24
Parking Brake and Dash Cover Assembly . . . 25
2-Spool Control Valve Assembly . . . 26
2-Spool Control Valve Assembly No. 95-8581 . . . 27
Hydraulic Manifold Assembly No. 121-3570 . . . 28
Steering Arm Assembly . . . 29
Steering Valve Assembly No. 121-7856 . . . 30
Floorplate Assembly . . . 31
Traction Pedal Assembly . . . 32
Hood Assembly . . . 33
Hood Assembly No. 121-3631 . . . 34
Wheel Motor and Brake Assembly . . . 35
Hydraulic Motor Assembly No. 110-8785 . . . 36
Hydraulic Motor Assembly No. 110-8786 . . . 37
Brake Assembly No. 104-7705 . . . 38
Rear Fork and Wheel Assembly . . . 39
Hydraulic Cylinder Assembly No. 121-3653 . . . 40
Hydraulic Motor Assembly No. 95-8694 . . . 41
Neutral Arm Assembly . . . 42
Gear Pump and Piston Pump Assembly . . . 43
Hydraulic Pump Assembly No. 104-4890 . . . 44
Hydraulic Gear Pump Assembly No. 108-9036 . . . 46
Traction Hydraulic Assembly . . . 47
Lift Hydraulic Assembly . . . 48
Steering Hydraulic Assembly . . . 49
Sidewinder Hydraulic Assembly . . . 50
Mow Hydraulic Assembly . . . 51
Roller and Carrier Frame Assembly . . . 52
Rear Roller Assembly No. 137-6141 . . . 53
Height-of-Cut Bracket Assembly . . . 54
Chamber, Blade and Spindle Assembly . . . 55
Spindle Assembly No. 121-3666 . . . 56
Crankcase Assembly . . . 58
Oil Pan and Dipstick Assembly . . . 59
Cylinder Head Assembly . . . 60
Gear Case and Oil Filter Cartridge Assembly . . . 61
Cylinder Head Cover Assembly . . . 62

**© 2024—The Toro® Company**
**8111 Lyndale Avenue South**
**Bloomington, MN 55420**



**Contact us at www.Toro.com.**
**Printed in the USA.**
**All Rights Reserved**

# Contents (continued)

Main Bearing Case Assembly . . . 63
Camshaft and Idle Gear Shaft Assembly . . . 64
Piston and Crankshaft Assembly . . . 65
Fuel Camshaft and Governor Shaft Assembly . . . 66
Idle Apparatus and Stop Solenoid Assembly . . . 67
Solenoid Assembly . . . 68
Injection Pump Assembly . . . 69
Governor Assembly . . . 70
Speed Control Plate Assembly . . . 71
Nozzle Holder and Glow Plug Assembly . . . 72
Nozzle Holder Assembly . . . 73
Alternator, Pulley and Fan Assembly . . . 74
Alternator Components Assembly . . . 75
Starter and Flywheel Assembly . . . 76
Starter Component Assembly . . . 77
Water Flange and Thermostat Assembly . . . 78
Water Pump Assembly . . . 79
Valve and Rocker Arm Assembly . . . 80
Inlet and Exhaust Manifold Assembly . . . 81
Miscellaneous Engine Parts . . . 82
Attachments and Accessories . . . 83

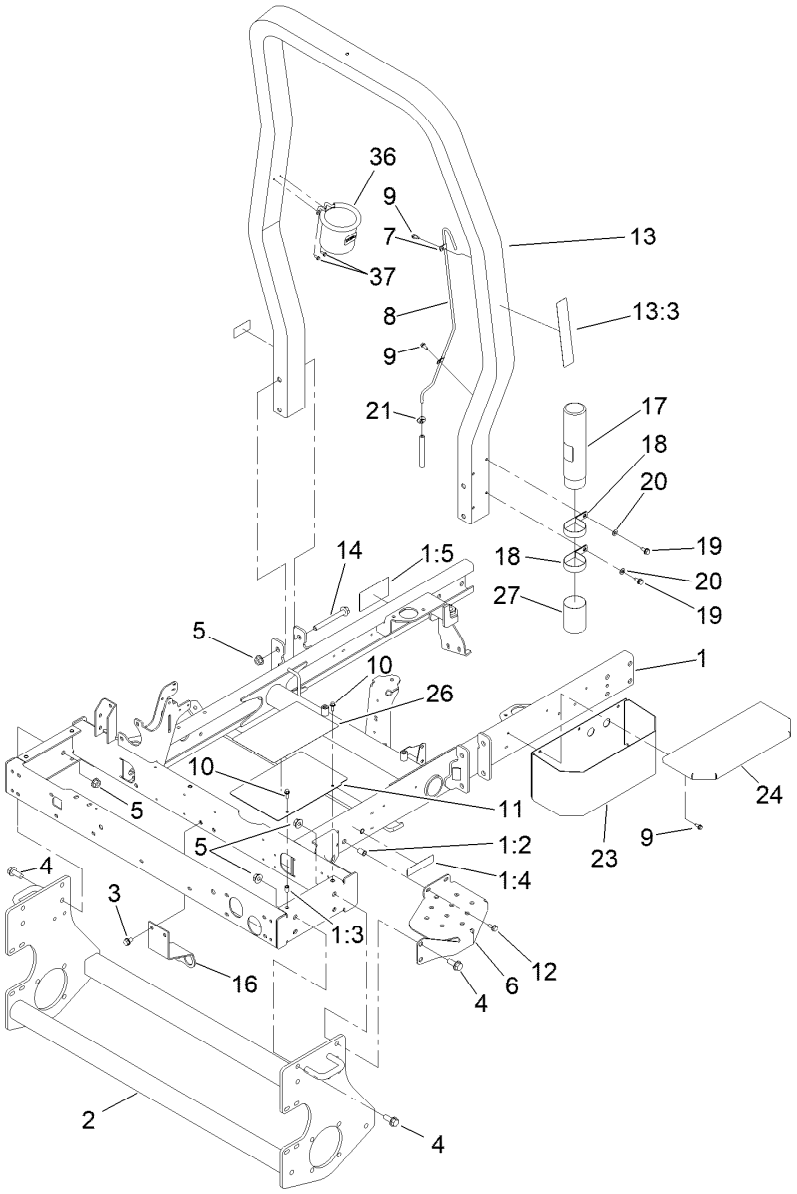


# Frame and Roll-Over Protection System Assembly

| Ref. | Part Number | Qty. | Description |
|---|---|---|---|
| 1 | 121-3635 | 1 | Frame |
| 1:2 | 32148-8 | 2 | Nut-Clinch |
| 1:3 | 32148-6 | 4 | Nut-Clinch |
| 1:4 | 133-8062 | 1 | Decal-Spark Arrestor |
| 1:5 | 117-3270 | 1 | Decal-Danger |
| 2 | 95-8568-03 | 1 | Frame-Lower |
| 3 | 32144-15 | 2 | Screw-HHFTF |
| 4 | 3234-38 | 8 | Screw-HHF |
| 5 | 32128-49 | 12 | Nut-HHF |
| 6 | 99-3375-03 | 1 | Step |
| 7 | 2412-72 | 2 | Clip-Closed, Insulated |
| 8 | 95-8615 | 1 | Tube-Breather |
| 9 | 32144-10 | 5 | Screw-HWH |
| 10 | 3234-4 | 2 | Screw-HHF |
| 11 | 104-0468-01 | 1 | Cover-Frame |
| 12 | 3234-5 | 2 | Screw-HHF |

| Ref. | Part Number | Qty. | Description |
|---|---|---|---|
| 13 | 127-8493 | 1 | ROPS ASM |
| 13:3 | 136-3702 | 1 | Decal-Safety, ROPS |
| 14 | 117-3176 | 4 | Screw-HHF |
| 16 | 115-3417-0P | 1 | Bracket-Bulkhead, Scissor |
| 17 | 104-7050 | 1 | Tube-Manual |
| 18 | 2412-133 | 2 | Clamp-R |
| 19 | 32144-70 | 2 | Screw-HWHTF |
| 20 | 3256-23 | 2 | Washer-Plain |
| 21 | 2412-108 | 1 | Clamp-Worm |
| 23 | 104-4634-03 | 1 | Toolbox |
| 24 | 104-4633-03 | 1 | Cover-Toolbox |
| 26 | 121-3623 | 1 | Decal-Danger |
| 27 | 104-7048 | 1 | Cap-Housing |
| 36 | 117-2378 | 1 | Holder-Bag |
| 37 | 32144-1 | 2 | Screw-Taptite |

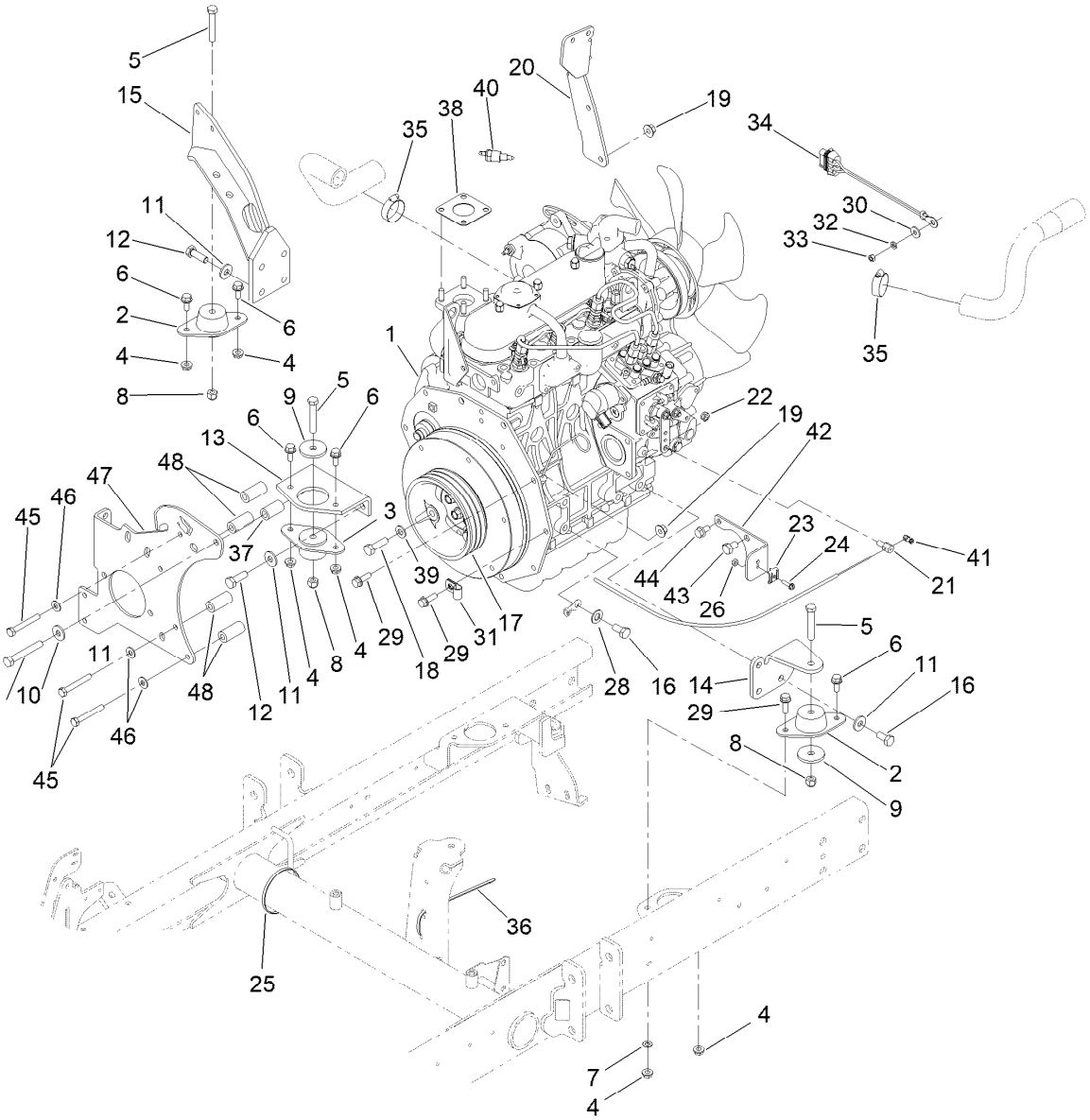


# Engine Installation Assembly

| Ref. | Part Number | Qty. | Description |
|---|---|---|---|
| 1 | 138-6908 | 1 | Engine-Kubota, D1105 |
| 2 | 121-9076 | 2 | Mount-Engine |
| 3 | 93-5265 | 1 | Mount-Engine |
| 4 | 32128-20 | 6 | Nut-HF |
| 5 | 323-11 | 3 | Screw-HH |
| 6 | 3234-5 | 5 | Screw-HHF |
| 7 | 120-9683 | 1 | Washer-Plain |
| 8 | 3296-39 | 3 | Nut-Lock, NI |
| 9 | 80-8560 | 3 | Washer-Hardened |
| 10 | 42-9370 | 1 | Screw-HH |
| 11 | 80-6990 | 9 | Washer-Hardened |
| 12 | 95-8812 | 5 | Screw-HH |
| 13 | 99-3618-0P | 1 | Mount-Engine, Front |
| 14 | 95-8937-0P | 1 | Mount-Engine, LH |
| 15 | 100-4838-0P | 1 | Mount-Engine |
| 16 | 63-7790 | 4 | Screw-Cap |
| 17 | 99-3626 | 1 | Pulley-3V |
| 18 | 56-2140 | 3 | Screw-HH |
| 19 | 32128-44 | 2 | Nut |
| 20 | 115-3487-0P | 1 | Bracket-Mount, Fuel Filter |
| 21 | 98-9311 | 1 | Swivel-Throttle |

| Ref. | Part Number | Qty. | Description |
|---|---|---|---|
| 22 | 3296-20 | 1 | Nut-Lock, NI |
| 23 | 81-1690 | 1 | Clamp-Cable |
| 24 | 32105-13 | 1 | Screw-HWH |
| 25 | 3290-379 | 2 | Tie-Cable |
| 26 | 3296-2 | 1 | Nut-Lock, NI |
| 28 | 33095-00 | 1 | Washer-Flat |
| 29 | 3234-17 | 3 | Screw-HHF |
| 30 | 3256-78 | 1 | Washer-Flat |
| 31 | 2412-10 | 1 | Clamp-R |
| 32 | 43-5930 | 1 | Washer-Lock, Spring |
| 33 | 48-7890 | 1 | Nut-Hex |
| 34 | 99-3441 | 1 | Harness-Wire, Fusible Link |
| 35 | 2412-34 | 2 | Clamp-Hose |
| 36 | 3290-378 | 14 | Tie-Cable |
| 37 | 95-8736 | 1 | Spacer |
| 38 | 98-9611 | 1 | Gasket |
| 39 | 3256-24 | 3 | Washer-Plain |
| 40 | 106-7772 | 1 | Thermoswitch |
| 41 | 112-9919 | 1 | Stop-Cable, Throttle |
| 42 | 110-9009-0P | 1 | Bracket-Cable, Throttle |
| 43 | 70-8470 | 1 | Screw-HH |

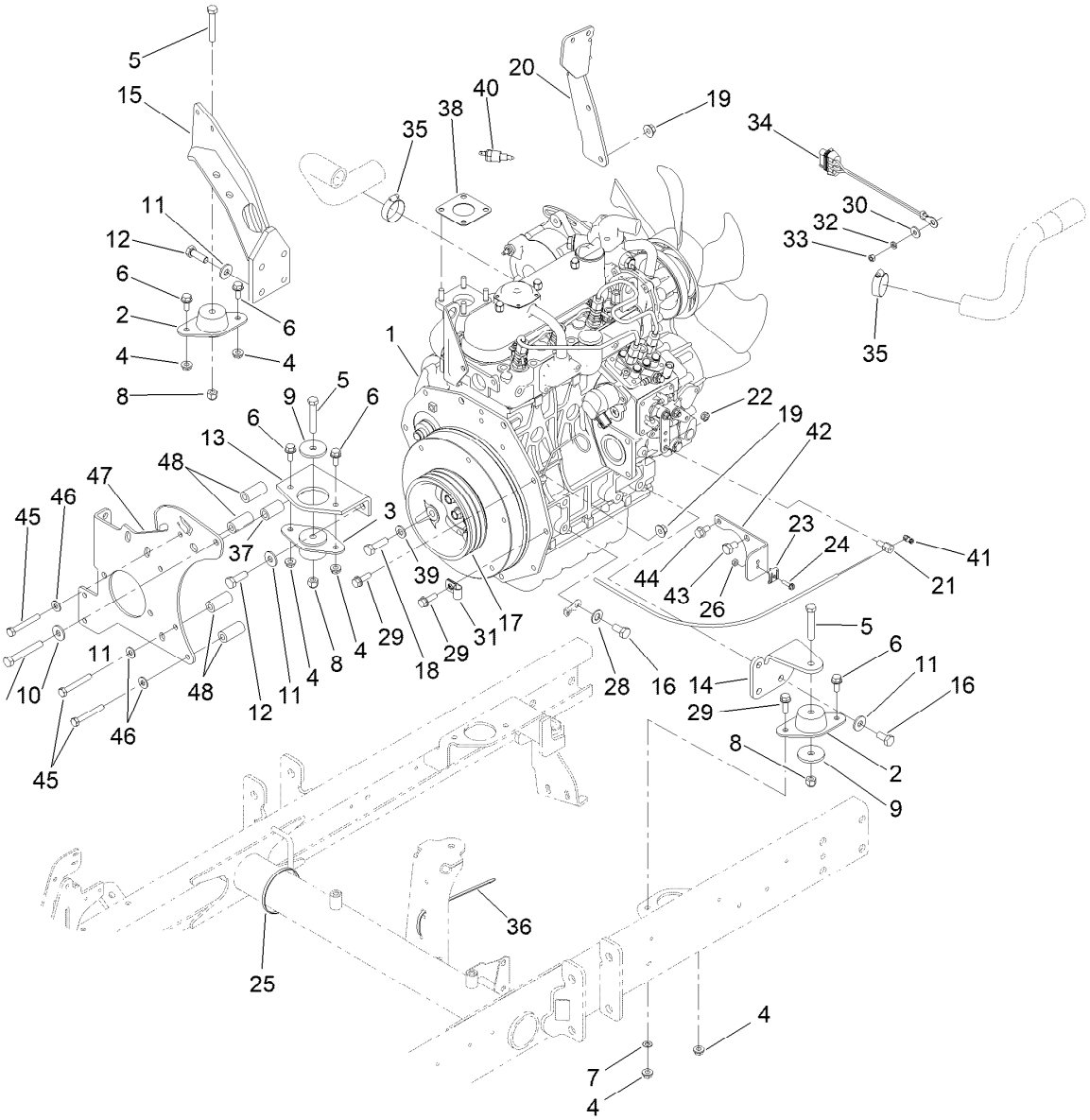


# Engine Installation Assembly (continued)

| Ref. | Part Number | Qty. | Description |
|---|---|---|---|
| 44 | 33104-016 | 1 | Screw-HHF |
| 45 | 33114-060 | 3 | Screw-HH |
| 46 | 87-8640 | 3 | Washer-Flat |
| 47 | 120-3375-0P | 1 | Plate-Mount, Pump |
| 48 | 95-8941 | 4 | Spacer-Mount, Pump |

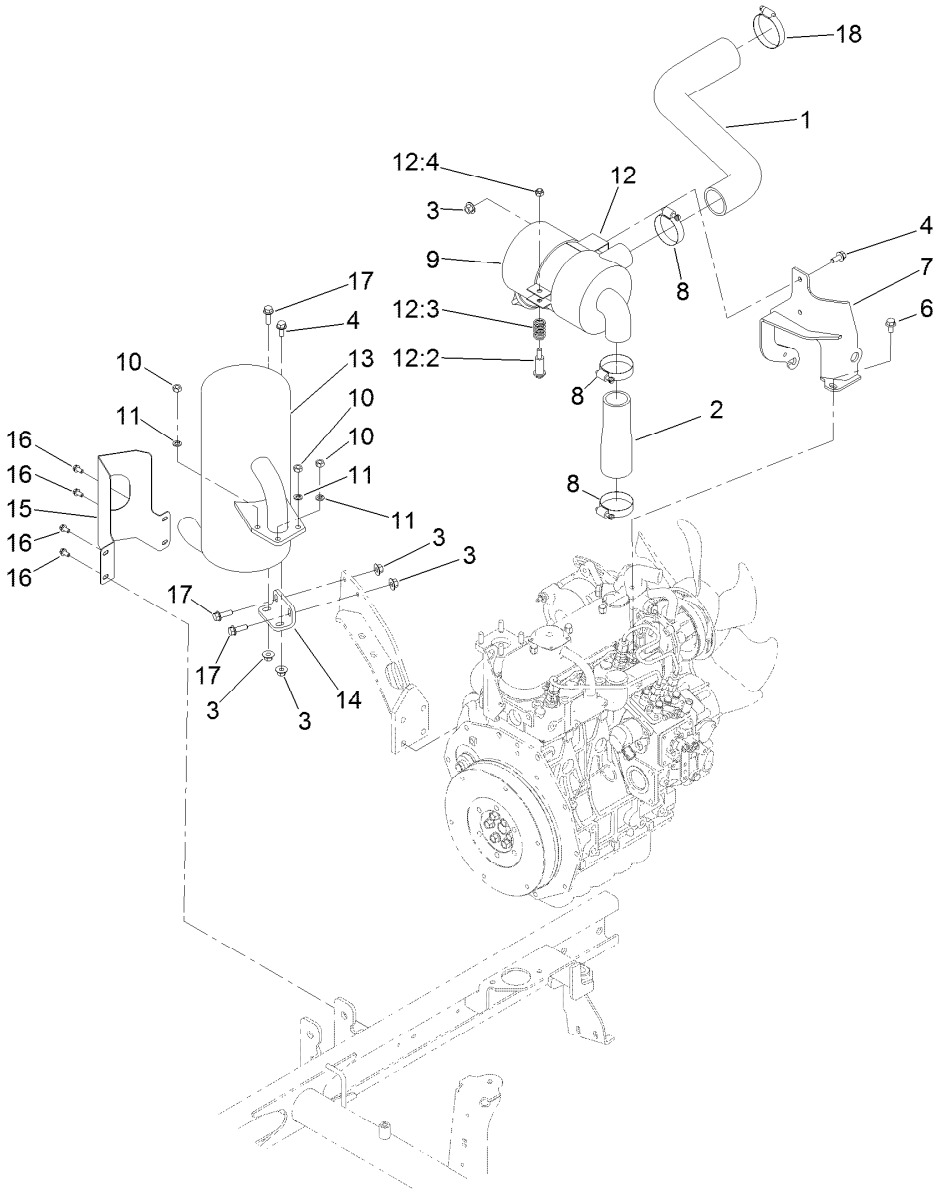


# Air Cleaner and Exhaust Assembly

| Ref. | Part Number | Qty. | Description |
|---|---|---|---|
| 1 | 120-3354 | 1 | Hose-Air Inlet, Upper |
| 2 | 95-8947 | 1 | Hose-Air Inlet, Lower |
| 3 | 32128-44 | 6 | Nut |
| 4 | 3234-5 | 3 | Screw-HHF |
| 6 | 33104-016 | 3 | Screw-HHF |
| 7 | 136-3154-0P | 1 | Bracket-Cleaner, Air |
| 8 | 2412-92 | 3 | Clamp-Hose |
| 9 | 93-2190 | 1 | Air Cleaner ASM |
| 10 | 33014-00 | 4 | Nut-Hex |
| 11 | 3253-4 | 4 | Washer-Lock |
| 12 | 93-2191 | 1 | Air Cleaner Mounting Band ASM |

| Ref. | Part Number | Qty. | Description |
|---|---|---|---|
| 12:2 | 94-3653 | 1 | Bolt |
| 12:3 | 94-3654 | 1 | Spring |
| 12:4 | 48-9510 | 1 | *obs* Nut |
| 13 | 104-4834 | 1 | Muffler |
| 14 | 95-8943-0P | 1 | Bracket-Muffler |
| 15 | 99-3425-03 | 1 | Guard-Exhaust |
| 16 | 32144-4 | 4 | Screw-HWH |
| 17 | 3234-17 | 3 | Screw-HHF |
| 18 | 2412-130 | 1 | Clamp-Hose |

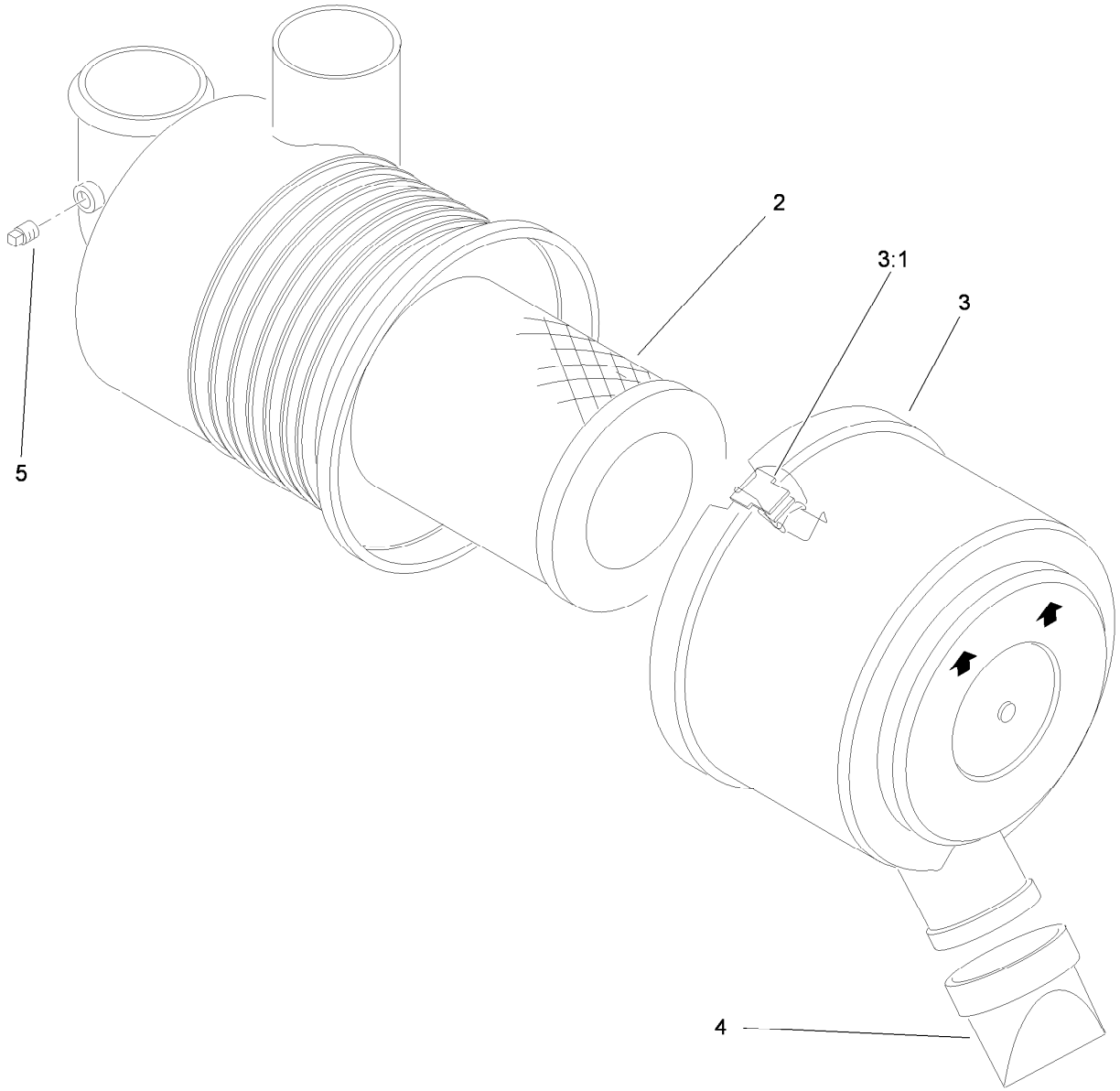


# Air Cleaner Assembly No. 93-2190

| *Ref.* | *Part Number* | *Qty.* | *Description* |
|---|---|---|---|
| 2 | 108-3811 | 1 | Filter-Air V-Twin HD |
| 3 | 94-3652 | 1 | Cover ASM |
| 3:1 | 1-643283 | 2 | Latch-Cleaner, Air |
| 4 | 87-9400 | 1 | Valve-Vacuator |
| 5 | 285-17 | 1 | Plug-Pipe |

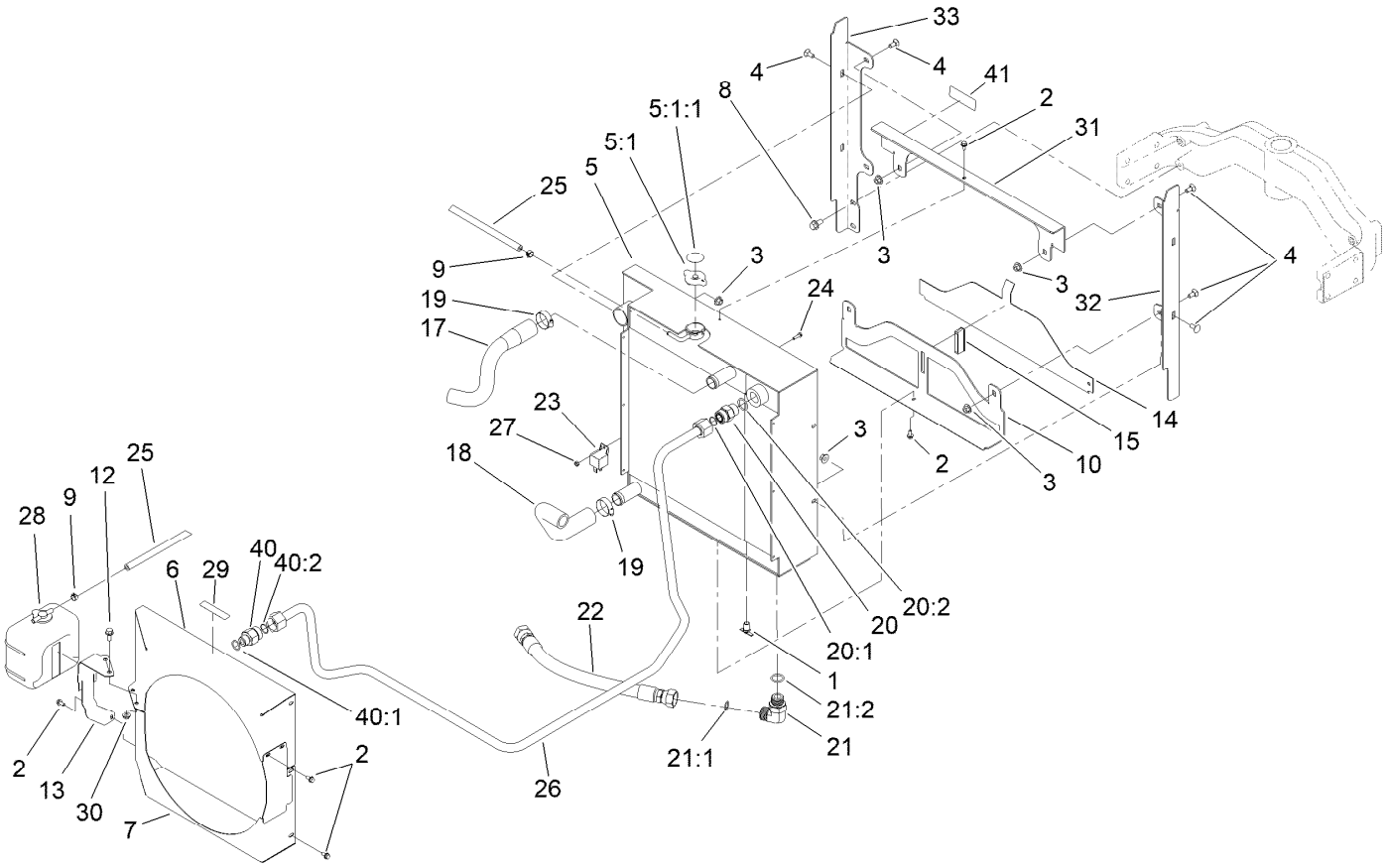


# Radiator and Oil Cooler Assembly

| Ref. | Part Number | Qty. | Description |
|---|---|---|---|
| 1 | 304-46 | 1 | Draincock |
| 2 | 32104-116 | 10 | Screw-HWHTF |
| 3 | 32128-44 | 8 | Nut |
| 4 | 3230-1 | 8 | Bolt-CARR |
| 5 | 119-2028 | 1 | Radiator And Oil Cooler ASM |
| 5:1 | 115-7766 | 1 | Cap-Radiator |
| 5:1:1 | 106-6755 | 1 | Decal-Cap, Radiator |
| 6 | 121-3556-0P | 1 | Shroud-Fan, Upper |
| 7 | 121-3552-0P | 1 | Shroud-Fan, Lower |
| 8 | 3234-1 | 4 | Screw-HHF |
| 9 | 92-2379 | 2 | Clamp-Hose |
| 10 | 120-3530-0P | 1 | Bracket-Radiator, Bottom |
| 12 | 3234-5 | 2 | Screw-HHF |
| 13 | 121-3557-0P | 1 | Bracket-Resevoir |
| 14 | 95-8702-0P | 1 | Shield-Radiator, Lower |
| 15 | 99-3497 | 1 | Magnet |
| 17 | 121-3558 | 1 | Hose-Radiator, Upper |
| 18 | 120-3399 | 1 | Hose-Radiator, Lower |
| 19 | 2412-34 | 2 | Clamp-Hose |
| 20 | 340-9 | 1 | Fitting-STR |

| Ref. | Part Number | Qty. | Description |
|---|---|---|---|
| 20:1 | 237-58 | 1 | O-Ring |
| 20:2 | 237-81 | 1 | O-Ring |
| 21 | 340-142 | 1 | Fitting-Elbow, 90 DEG |
| 21:1 | 237-58 | 1 | O-Ring |
| 21:2 | 237-81 | 1 | O-Ring |
| 22 | 92-7536 | 1 | Hose-HYD |
| 23 | 99-7435 | 1 | Relay |
| 24 | 32105-13 | 1 | Screw-HWH |
| 25 | 109-0274 | 1 | Hose-Fuel |
| 26 | 121-3609 | 1 | Tube-HYD |
| 27 | 3296-2 | 1 | Nut-Lock, NI |
| 28 | 104-9318 | 1 | Bottle-Overflow |
| 29 | 93-6681 | 1 | Decal-Warning, Fan |
| 30 | 32128-20 | 2 | Nut-HF |
| 31 | 120-3529-0P | 1 | Bracket-Radiator, Top |
| 32 | 120-3531-0P | 1 | Bracket-Radiator, LH |
| 33 | 120-3532-0P | 1 | Bracket-Radiator, RH |
| 40 | 340-66 | 1 | Fitting-Straight |
| 40:1 | 237-80 | 1 | O-Ring |
| 40:2 | 237-58 | 1 | O-Ring |
| 41 | 125-6688 | 1 | Decal-Danger, Starter Fluid |

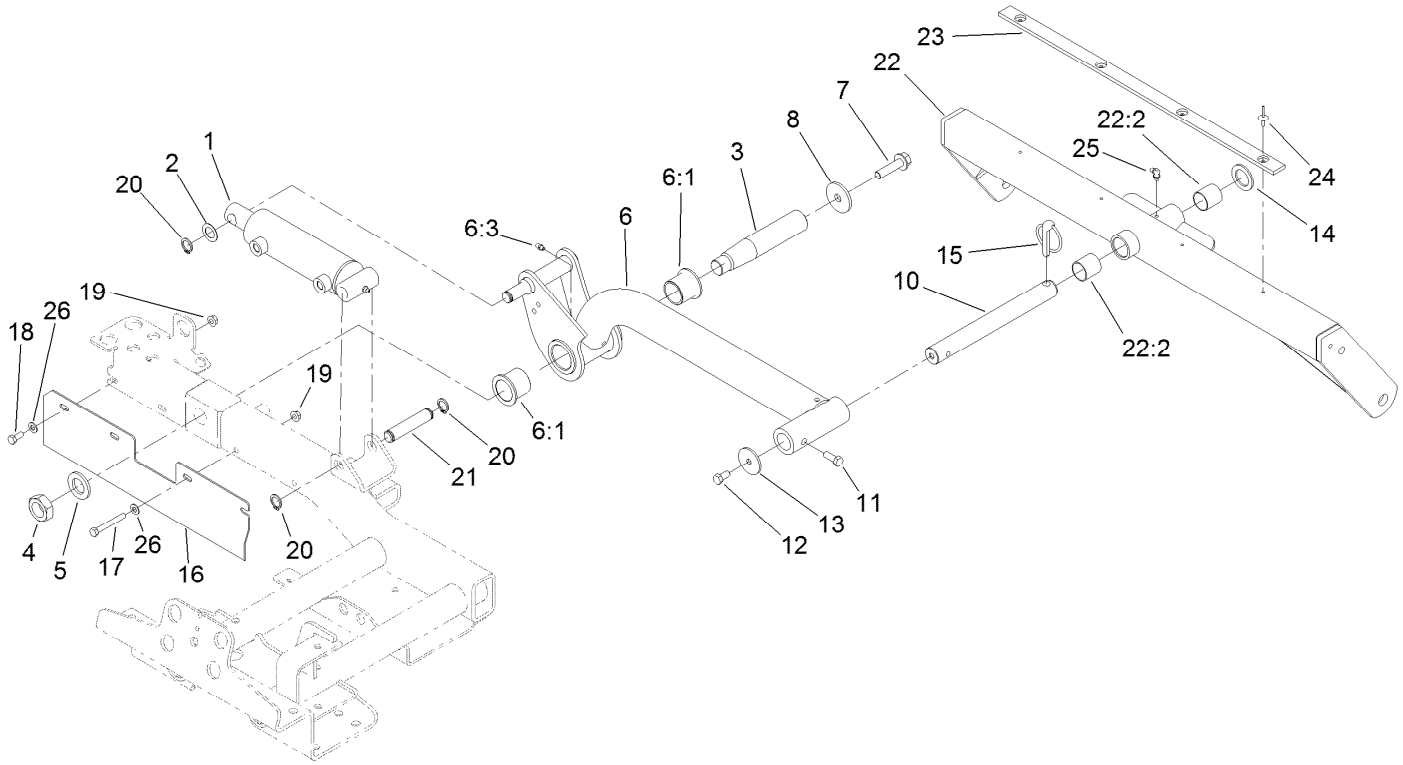


# Rear Lift Arm and Carrier Frame Assembly

| Ref. | Part Number | Qty. | Description |
|---|---|---|---|
| 1 | 112-9916 | 1 | HYD Cylinder ASM |
| 2 | 3-6498 | 1 | Washer-Thrust |
| 3 | 95-8990 | 1 | Shaft-Pivot, Rear |
| 4 | 3220-9 | 1 | Nut-Jam |
| 5 | 86-1480 | 1 | Washer |
| 6 | 115-3473 | 1 | Rear Liftarm ASM |
| 6:1 | 69-6470 | 2 | Bushing-Caster |
| 6:3 | 302-5 | 1 | Fitting-Grease |
| 7 | 3234-27 | 1 | Screw-HHF |
| 8 | 75-7730 | 1 | Washer-Thrust |
| 10 | 100-4944 | 1 | Shaft-Pivot, Cutting Unit |
| 11 | 323-6 | 1 | Screw-HH |
| 12 | 323-4 | 1 | Screw-HH |
| 13 | 63-7400 | 1 | Washer-Rebound |

| Ref. | Part Number | Qty. | Description |
|---|---|---|---|
| 14 | 3-6781 | 1 | Washer-Flat |
| 15 | 283-71 | 1 | Pin-Lynch |
| 16 | 121-3616-03 | 1 | Guard |
| 17 | 322-12 | 2 | Screw-HH |
| 18 | 322-3 | 2 | Screw-HH |
| 19 | 32128-20 | 4 | Nut-HF |
| 20 | 32120-93 | 3 | Ring-Retaining |
| 21 | 95-8575 | 1 | Pin-Clevis |
| 22 | 104-4229 | 1 | Rear Carrier Frame ASM |
| 22:2 | 108-4000 | 2 | Bushing |
| 23 | 95-8936 | 1 | Strip-Wear |
| 24 | 3269-18 | 4 | Rivet-Blind |
| 25 | 302-60 | 1 | Fitting-Grease |
| 26 | 3256-23 | 4 | Washer-Plain |

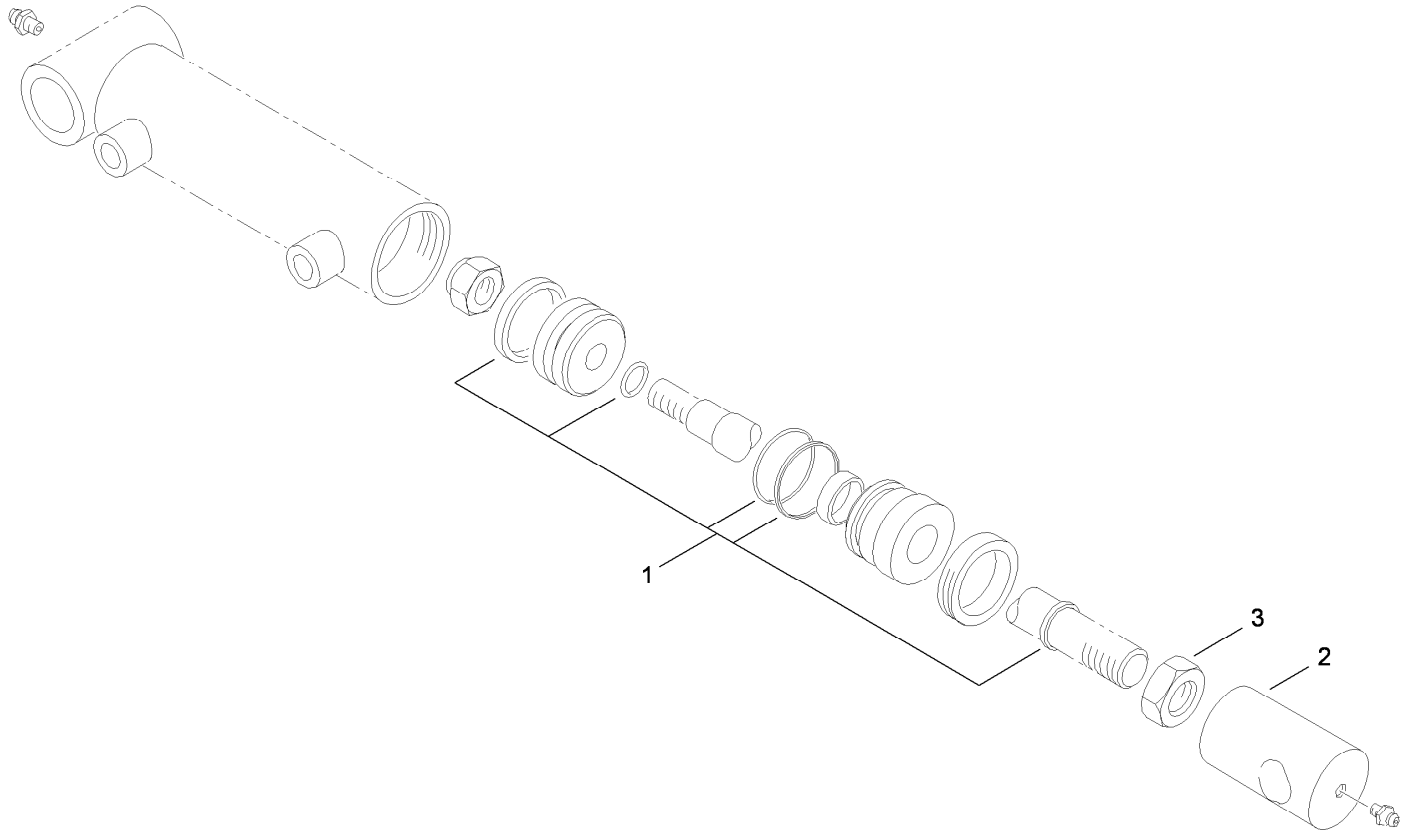


# Hydraulic Cylinder Assembly No. 112-9916

| *Ref.* | *Part Number* | *Qty.* | *Description* |
|---|---|---|---|
| 1 | 115-3410 | 1 | Seal Kit |
| 2 | 108-9035 | 1 | Clevis |
| 3 | 3220-7 | 1 | Nut-Jam |

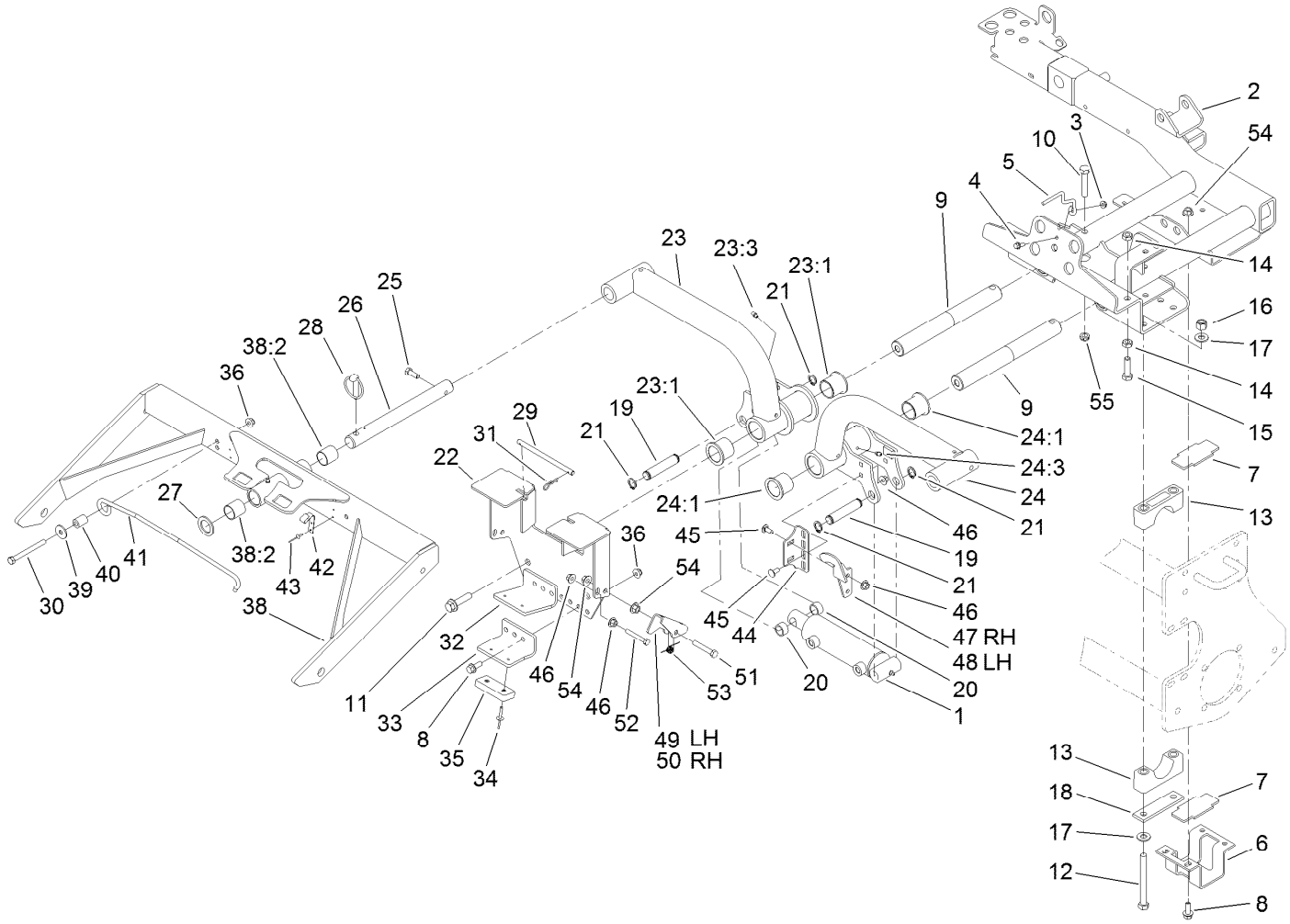


# Sidewinder Carrier Assembly

| Ref. | Part Number | Qty. | Description |
|---|---|---|---|
| 1 | 112-9916 | 1 | HYD Cylinder ASM |
| 2 | 100-4939-03 | 1 | Carrier-Sidewinder |
| 3 | 32128-33 | 1 | Nut-HF |
| 4 | 3234-4 | 1 | Screw-HHF |
| 5 | 99-3433 | 1 | Wire-Center |
| 6 | 104-0416-0P | 1 | Bracket-Slide |
| 7 | 104-0417 | 2 | Slide-Plastic |
| 8 | 3234-11 | 8 | Screw-HHF |
| 9 | 95-8531 | 2 | Shaft-Pivot, Liftarm |
| 10 | 325-10 | 2 | Screw-HH |
| 11 | 3234-27 | 2 | Screw-HHF |
| 12 | 325-19 | 8 | Screw-HH |
| 13 | 104-4865 | 8 | Cap-Bearing |
| 14 | 3218-5 | 4 | Nut-Jam |
| 15 | 325-7 | 2 | Screw-HH |
| 16 | 3296-23 | 8 | Nut-Lock, NI |
| 17 | 87-7270 | 16 | Washer-Thrust |
| 18 | 99-3373 | 4 | Bar-Support, Slide |
| 19 | 95-8575 | 2 | Pin-Clevis |
| 20 | 75-9590 | 2 | Spacer-Cylinder |
| 21 | 32120-93 | 4 | Ring-Retaining |

| Ref. | Part Number | Qty. | Description |
|---|---|---|---|
| 22 | 104-4820-03 | 1 | Bracket-Stop, Carrier |
| 23 | 115-3462 | 1 | RH Liftarm ASM |
| 23:1 | 69-6470 | 2 | Bushing-Caster |
| 23:3 | 302-5 | 1 | Fitting-Grease |
| 24 | 115-3461 | 1 | LH Liftarm ASM |
| 24:1 | 69-6470 | 2 | Bushing-Caster |
| 24:3 | 302-5 | 1 | Fitting-Grease |
| 25 | 323-6 | 2 | Screw-HH |
| 26 | 105-7560 | 2 | Shaft-Cu Pivot |
| 27 | 3-6781 | 2 | Washer-Flat |
| 28 | 283-71 | 2 | Pin-Lynch |
| 29 | 104-0472 | 1 | Rod |
| 30 | 323-42 | 2 | Screw-HH |
| 31 | 3290-467 | 2 | Pin-Hair |
| 32 | 110-8793-03 | 1 | Stop-Deck, RH |
| 33 | 110-8794-03 | 1 | Stop-Deck, LH |
| 34 | 3269-11 | 4 | Rivet-Pop |
| 35 | 86-5350 | 2 | Bumper-Rubber |
| 36 | 104-8301 | 6 | Nut-HF, NI |
| 38 | 110-8787 | 2 | Front Carrier Frame ASM |
| 38:2 | 108-4000 | 2 | Bushing |

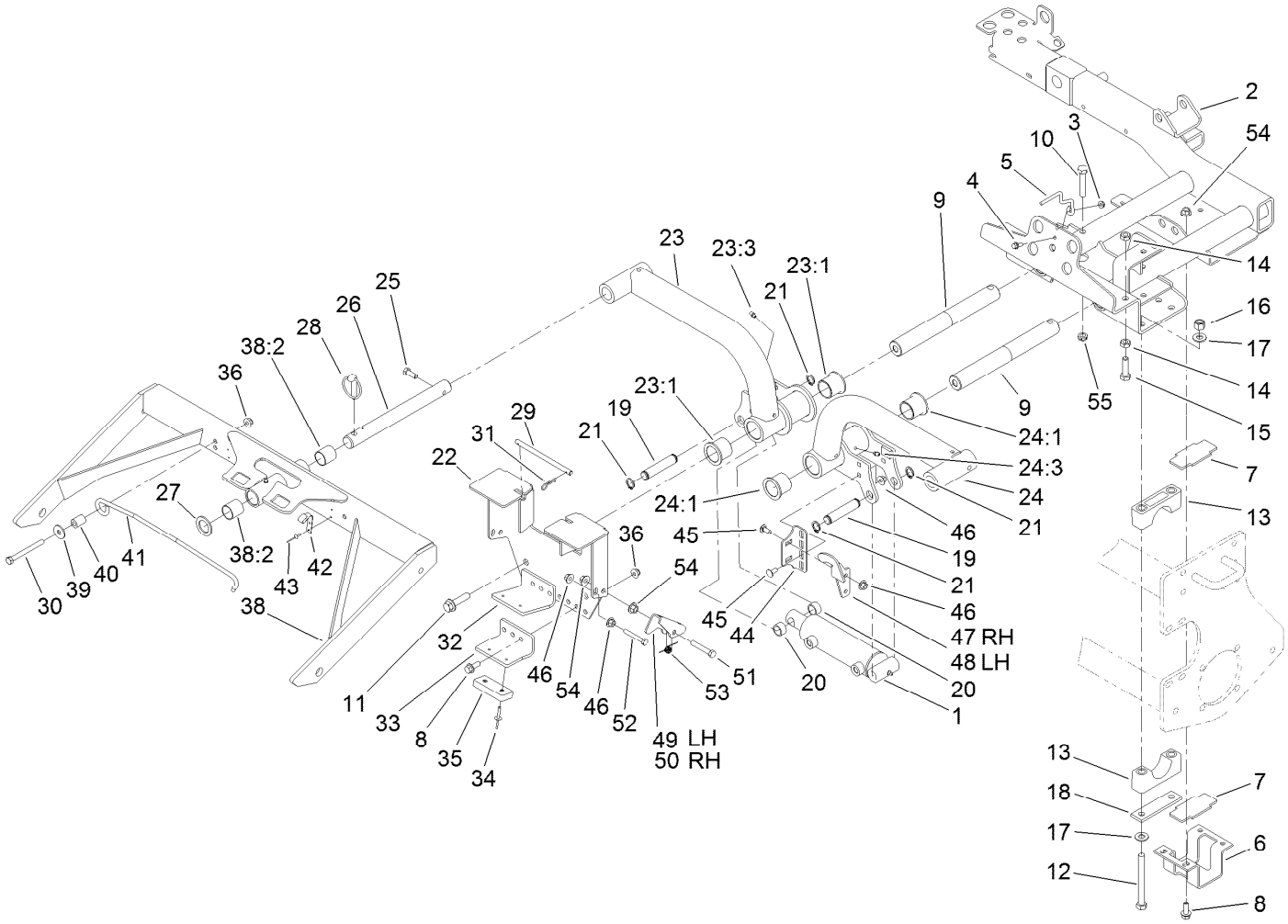


# Sidewinder Carrier Assembly (continued)

| Ref. | Part Number | Qty. | Description |
|---|---|---|---|
| 39 | 93-8806 | 2 | Washer-Hardened |
| 40 | 104-4613 | 2 | Tube-Latch |
| 41 | 104-4612 | 2 | Rod-Latch |
| 42 | 104-4237 | 2 | Clip-Rod |
| 43 | 3290-271 | 4 | Rivet-Pop |
| 44 | 104-4828-03 | 2 | Bracket-Actuator |
| 45 | 3230-23 | 8 | Bolt-CARR |
| 46 | 32128-44 | 12 | Nut |
| 47 | 104-4826-03 | 1 | Actuator-RH |

| Ref. | Part Number | Qty. | Description |
|---|---|---|---|
| 48 | 104-4827-03 | 1 | Actuator-LH |
| 49 | 104-4819-03 | 1 | Bracket-Pivot, LH |
| 50 | 104-4825-03 | 1 | Bracket-Pivot, RH |
| 51 | 323-12 | 2 | Screw-HH |
| 52 | 322-12 | 2 | Screw-HH |
| 53 | 104-4821 | 2 | Spring-Torsion |
| 54 | 32128-43 | 8 | Nut-Flange |
| 55 | 3296-45 | 2 | Nut-Hex |

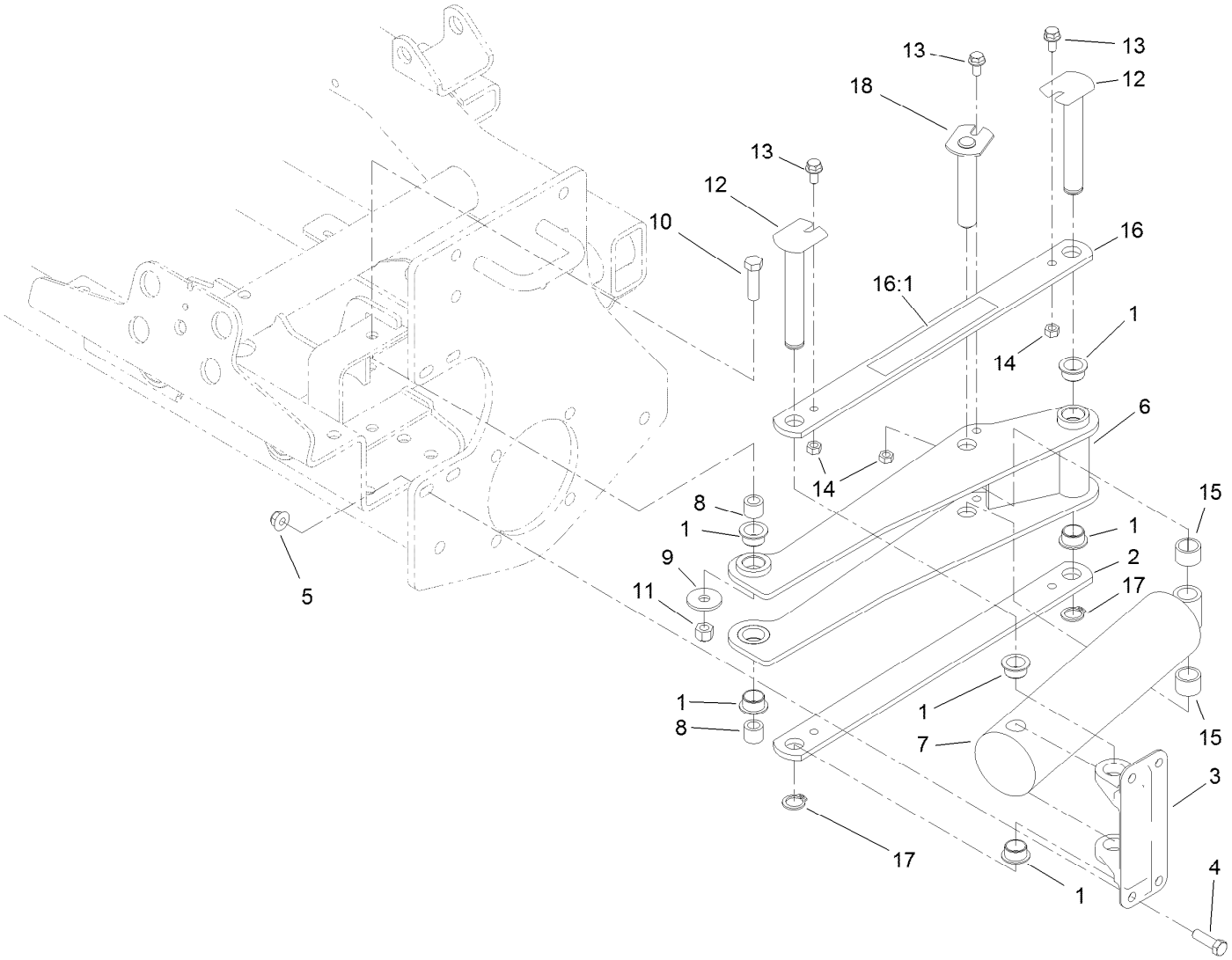


# Scissor Frame and Link Assembly

| Ref. | Part Number | Qty. | Description |
|---|---|---|---|
| 1 | 95-8526 | 6 | Bushing-Plastic |
| 2 | 95-8527-0P | 1 | Link-Scissor |
| 3 | 95-8883 | 1 | Mount-Scissor |
| 4 | 323-7 | 4 | Screw-HH |
| 5 | 104-8301 | 4 | Nut-HF, NI |
| 6 | 95-8521-03 | 1 | Frame-Scissor |
| 7 | 121-3654 | 1 | Cylinder-HYD |
| 8 | 95-8603 | 2 | Spacer |
| 9 | 87-5330 | 2 | Washer |
| 10 | 324-6 | 2 | Screw-HH |

| Ref. | Part Number | Qty. | Description |
|---|---|---|---|
| 11 | 3296-48 | 2 | Nut-Hex |
| 12 | 125-1914 | 2 | Pin-Pivot |
| 13 | 3234-14 | 3 | Screw-HHF |
| 14 | 32152-1 | 3 | Nut-Lock, Cone |
| 15 | 46-6350 | 2 | Spacer |
| 16 | 99-3505 | 1 | Scissors Link ASM |
| 16:1 | 94-3353 | 1 | Decal-Pinch Point, Intl |
| 17 | 32120-93 | 2 | Ring-Retaining |
| 18 | 140-5248 | 1 | Pin-Ram, Pivot |

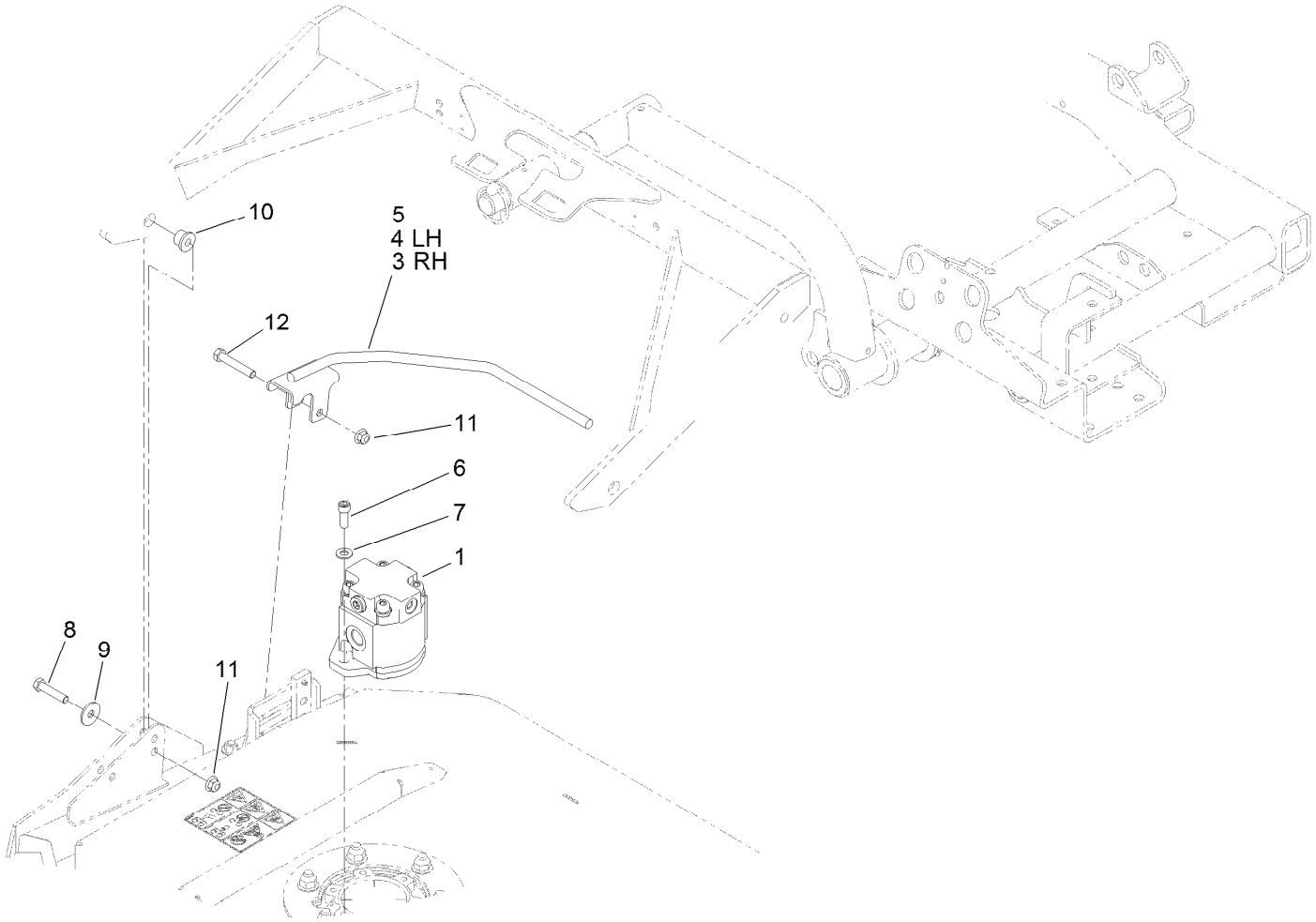


# Hydraulic Motor and Foot Guard Assembly

| *Ref.* | *Part Number* | *Qty.* | *Description* |
|---|---|---|---|
| 1 | 117-5141 | 3 | HYD Motor ASM |
| 3 | 112-9901-03 | 1 | Guard-Foot, RH |
| 4 | 112-9902-03 | 1 | Guard-Foot, LH |
| 5 | 112-9900-03 | 1 | Guard-Foot |
| 6 | 3274-7 | 6 | Screw-HSH |
| 7 | 3256-24 | 6 | Washer-Plain |
| 8 | 323-52 | 6 | Screw-HH |
| 9 | 93-8806 | 6 | Washer-Hardened |
| 10 | 95-8803 | 6 | Bushing-Flange |
| 11 | 104-8301 | 10 | Nut-HF, NI |
| 12 | 323-11 | 4 | Screw-HH |

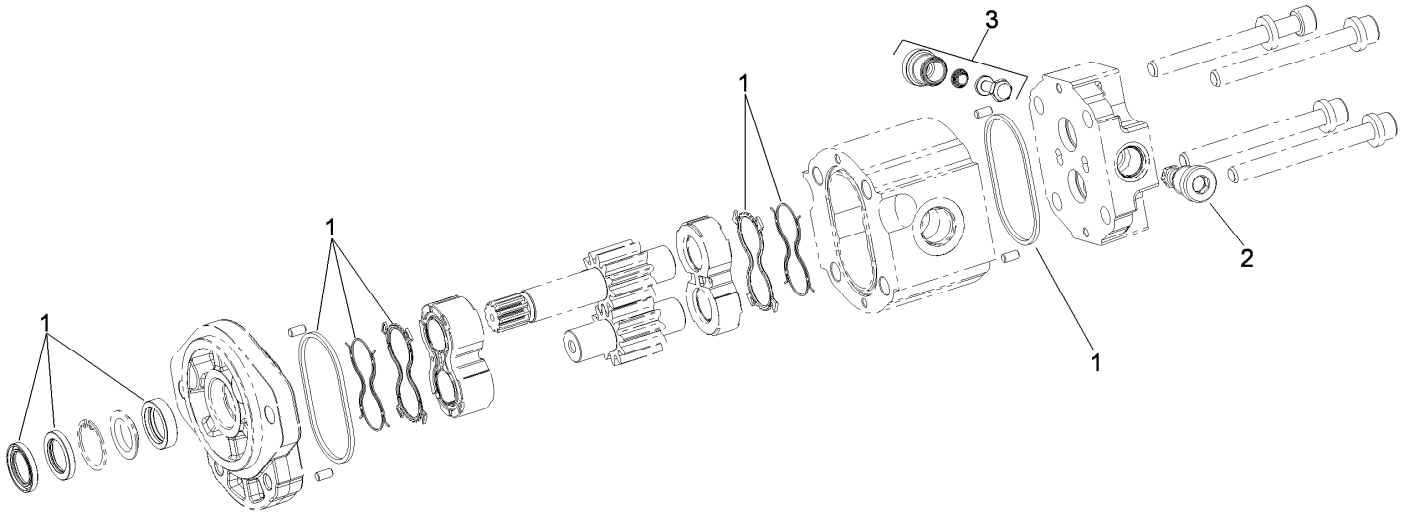


# Gear Motor Assembly No. 117-5141

| *Ref.* | *Part Number* | *Qty.* | *Description* |
|---|---|---|---|
| 1 | 117-0235 | 1 | Seal Kit |
| 2 | 107-7820 | 1 | Valve-Relief |
| 3 | 107-7821 | 1 | Valve-Anticavitation |

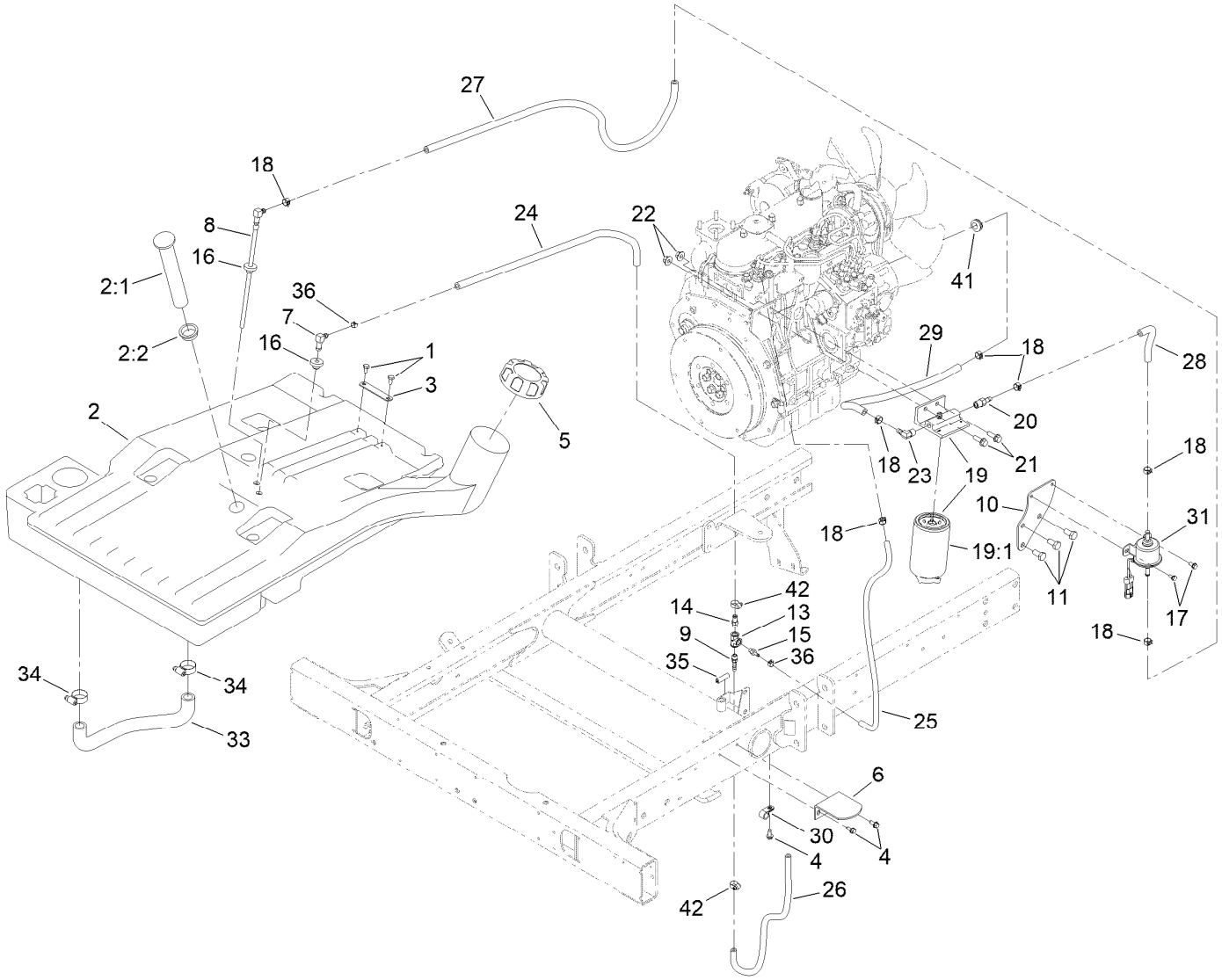


# Fuel Tank Assembly

| Ref. | Part Number | Qty. | Description |
|---|---|---|---|
| 1 | 321-2 | 2 | Screw-HH |
| 2 | 105-7865 | 1 | Tank-Fuel |
| 2:1 | 95-8971 | 1 | Gauge-Fuel |
| 2:2 | 95-8972 | 1 | Grommet |
| 3 | 95-8881 | 1 | Strap-Line, Fuel |
| 4 | 32144-10 | 3 | Screw-HWH |
| 5 | 114-5064 | 1 | Cap-Diesel |
| 6 | 95-8968-03 | 1 | Support-Tank, Fuel |
| 7 | 46-6550 | 1 | Fitting-Elbow, 90 DEG |
| 8 | 110-9689 | 1 | Pipe-Stand |
| 9 | 304-73 | 1 | Fitting-Straight |
| 10 | 136-3818-0P | 1 | Plate-Fuel Pump |
| 11 | 63-7790 | 3 | Screw-Cap |
| 13 | 354-20 | 1 | Fitting-Tee |
| 14 | 354-21 | 1 | Fitting-Barbed |
| 15 | 354-22 | 1 | Fitting-Barbed |
| 16 | 46-6560 | 2 | Bushing |
| 17 | 32144-4 | 2 | Screw-HWH |
| 18 | 92-2379 | 7 | Clamp-Hose |
| 19 | 110-9044 | 1 | Separator-Filter |

| Ref. | Part Number | Qty. | Description |
|---|---|---|---|
| 19:1 | 110-9049 | 1 | Filter-Spin On, Fuel/Water |
| 20 | 353-783 | 1 | Fitting-STR |
| 21 | 3234-17 | 2 | Screw-HHF |
| 22 | 32128-44 | 2 | Nut |
| 23 | 353-781 | 1 | Fitting-HYD, 90 |
| 24 | 110-6187 | 1 | Hose-Fuel |
| 25 | 110-8751 | 1 | Hose-Fuel |
| 26 | 110-5701 | 1 | Hose-Fuel |
| 27 | 121-7914 | 1 | Hose-Fuel |
| 28 | 117-4026 | 1 | Hose-Fuel |
| 29 | 121-7852 | 1 | Hose-Fuel |
| 30 | 2412-73 | 1 | Clamp-R |
| 31 | 145-3154 | 1 | Pump-Fuel, Electric |
| 33 | 105-4094 | 1 | Hose-Formed |
| 34 | 2412-129 | 2 | Clamp-Hose |
| 35 | 110-8754 | 1 | Trim |
| 36 | 2412-80 | 2 | Clamp-Hose |
| 41 | 1-543296 | 1 | Grommet |
| 42 | 2412-108 | 2 | Clamp-Worm |

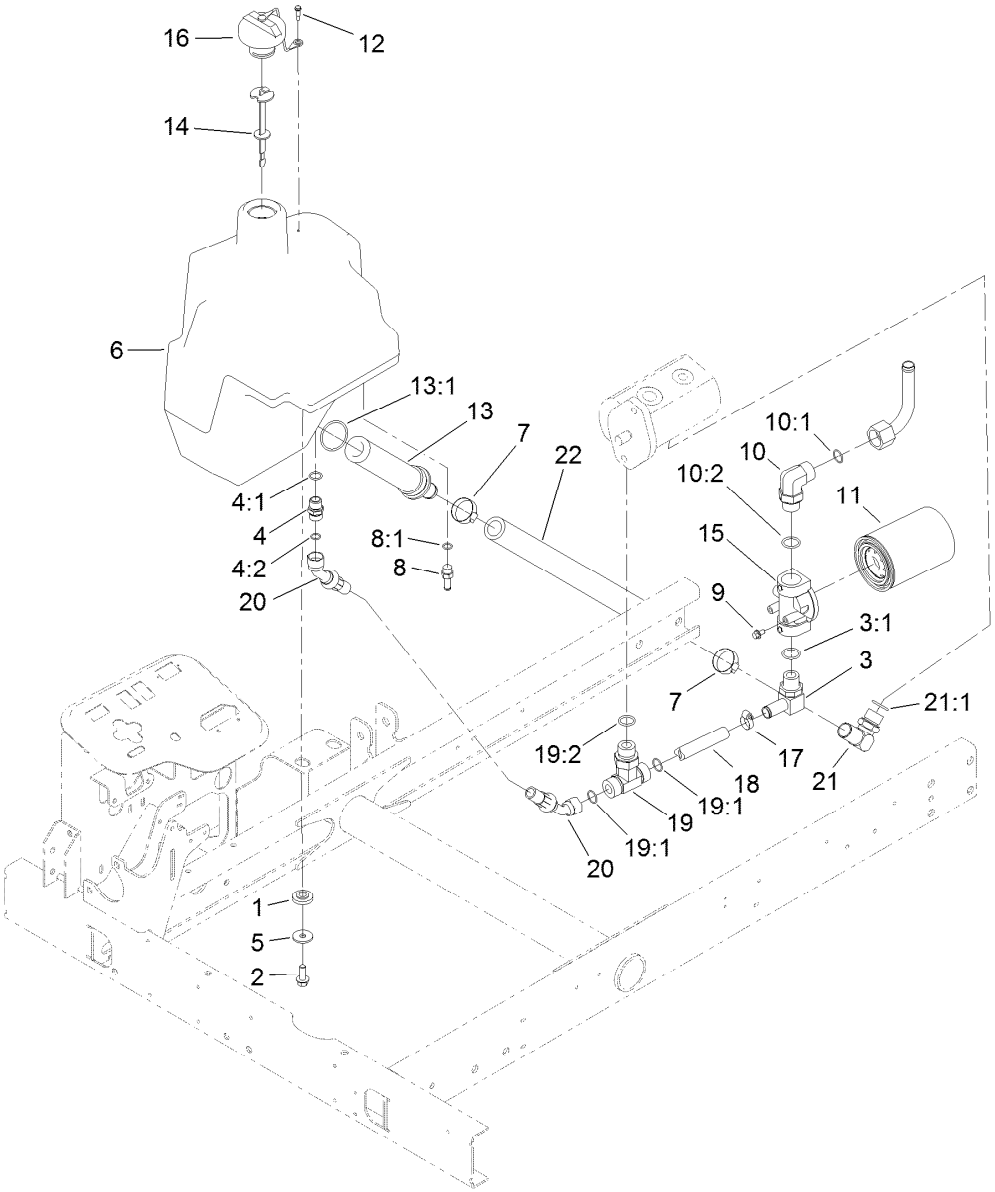


# Hydraulic Tank and Filter Assembly

| Ref. | Part Number | Qty. | Description |
|---|---|---|---|
| 1 | 240-11 | 4 | Bushing-Flange |
| 2 | 3234-11 | 4 | Screw-HHF |
| 3 | 353-987 | 1 | Fitting-Elbow, 90 |
| 3:1 | 237-81 | 1 | O-Ring |
| 4 | 100-4890 | 1 | Fitting-Check |
| 4:1 | 237-79 | 1 | O-Ring |
| 4:2 | 237-30 | 1 | O-Ring |
| 5 | 63-8410 | 4 | Washer |
| 6 | 104-4840 | 1 | Tank-HYD |
| 7 | 2412-34 | 2 | Clamp-Hose |
| 8 | 353-979 | 1 | Fitting-STR |
| 8:1 | 237-42 | 1 | O-Ring |
| 9 | 3234-13 | 2 | Screw-HHF |
| 10 | 340-142 | 1 | Fitting-Elbow, 90 DEG |
| 10:1 | 237-58 | 1 | O-Ring |
| 10:2 | 237-81 | 1 | O-Ring |

| Ref. | Part Number | Qty. | Description |
|---|---|---|---|
| 11 | 86-3010 | 1 | Filter-Oil |
| 12 | 57-5420 | 1 | Screw-Shoulder |
| 13 | 104-7546 | 1 | Tank Strainer ASM |
| 13:1 | 340-136 | 1 | O-Ring |
| 14 | 119-6968 | 1 | Dipstick-Oil |
| 15 | 92-5821 | 1 | Head-Filter |
| 16 | 93-7160 | 1 | Cap-Oil, HYD |
| 17 | 2412-36 | 2 | Clamp-Hose |
| 18 | 104-0486 | 1 | Hose-HYD |
| 19 | 104-4836 | 1 | Fitting-Tee |
| 19:1 | 237-58 | 2 | O-Ring |
| 19:2 | 237-81 | 1 | O-Ring |
| 20 | 104-0487 | 1 | Hose-HYD |
| 21 | 95-3502 | 1 | Fitting-Elbow 90 |
| 21:1 | 237-81 | 1 | O-Ring |
| 22 | 104-5486 | 1 | Hose |

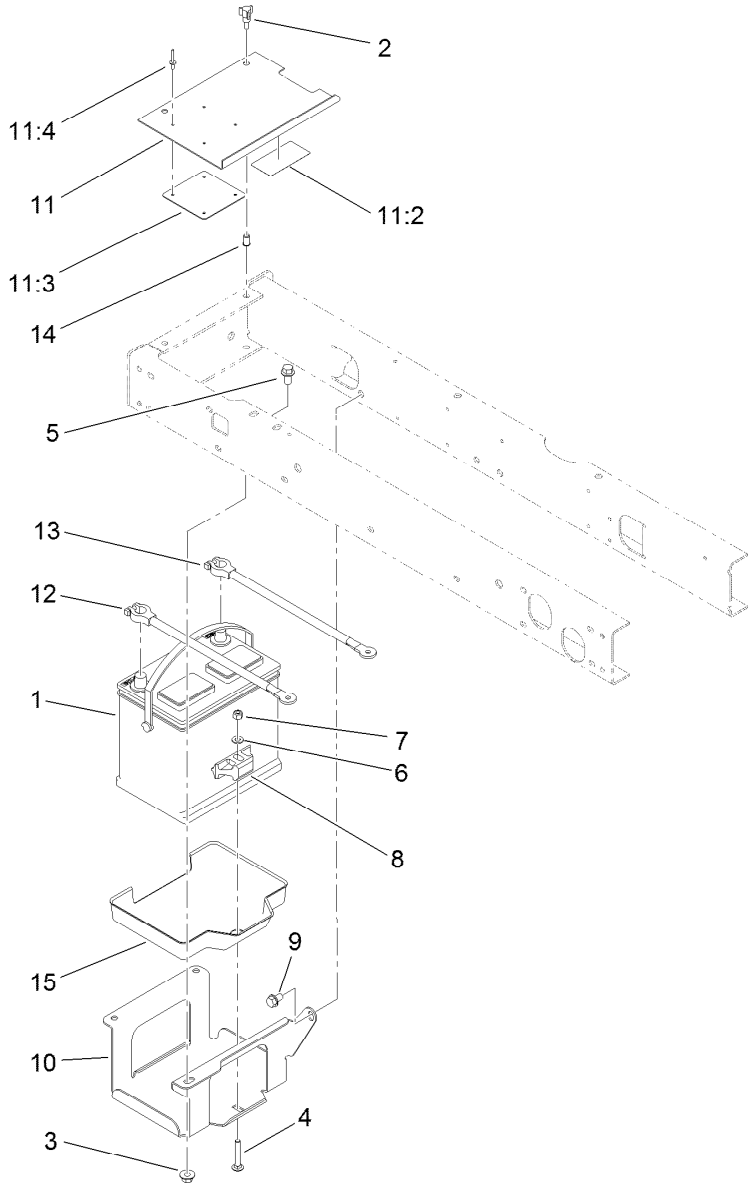


# Battery Assembly

| Ref. | Part Number | Qty. | Description |
|---|---|---|---|
| 1 | 132-8621 | 1 | Battery - Corrosive |
| 2 | 233-70 | 2 | Knob-Star, Three |
| 3 | 32128-43 | 3 | Nut-Flange |
| 4 | 3230-6 | 1 | Bolt-CARR |
| 5 | 3234-1 | 3 | Screw-HHF |
| 6 | 3256-23 | 1 | Washer-Plain |
| 7 | 3296-29 | 1 | Nut-Lock, NI |
| 8 | 138-6335 | 1 | Retainer-Battery |
| 9 | 32144-15 | 1 | Screw-HHFTF |

| Ref. | Part Number | Qty. | Description |
|---|---|---|---|
| 10 | 95-8796-03 | 1 | Support-Battery |
| 11 | 99-3602 | 1 | Battery Cover ASM |
| 11:2 | 93-7276 | 1 | Decal-Danger |
| 11:3 | 87-7620 | 1 | Shield-Terminal, Battery |
| 11:4 | 3269-27 | 4 | Rivet-Snap |
| 12 | 95-8853 | 1 | Cable-Battery, Positive |
| 13 | 95-8854 | 1 | Cable-Battery, Negative |
| 14 | 32148-6 | 2 | Nut-Clinch |
| 15 | 99-3513 | 1 | Tray-Battery |

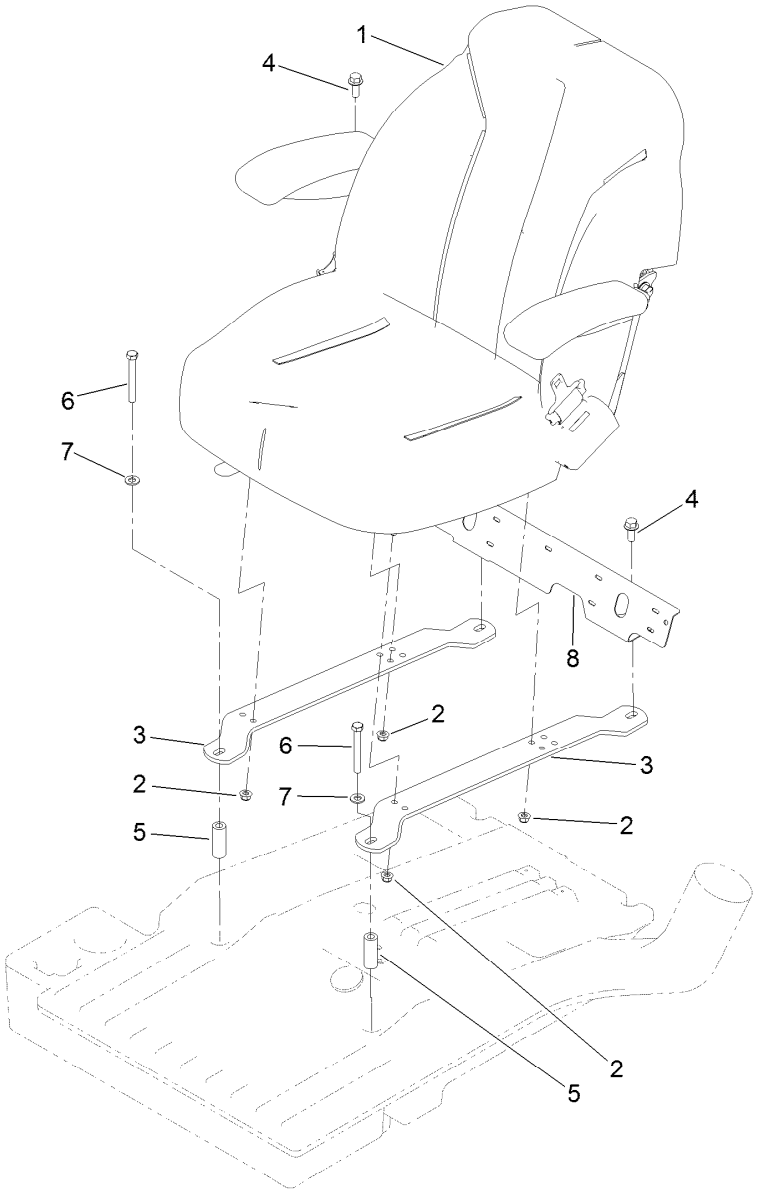


# Seat Assembly

| Ref. | Part Number | Qty. | Description |
|---|---|---|---|
| 1 | 139-2679 | 1 | Seat And Track ASM |
| 2 | 104-8300 | 4 | Nut-HF, NI |
| 3 | 121-3655-03 | 2 | Strap-Support, Seat |
| 4 | 3234-11 | 2 | Screw-HHF |
| 5 | 104-0466 | 2 | Spacer |
| 6 | 323-14 | 2 | Screw-HH |
| 7 | 3256-24 | 2 | Washer-Plain |
| 8 | 121-3644-03 | 1 | Shield-Heat |
| 99 | 3290-378 | 1 | Tie-Cable ● |

● Not illustrated

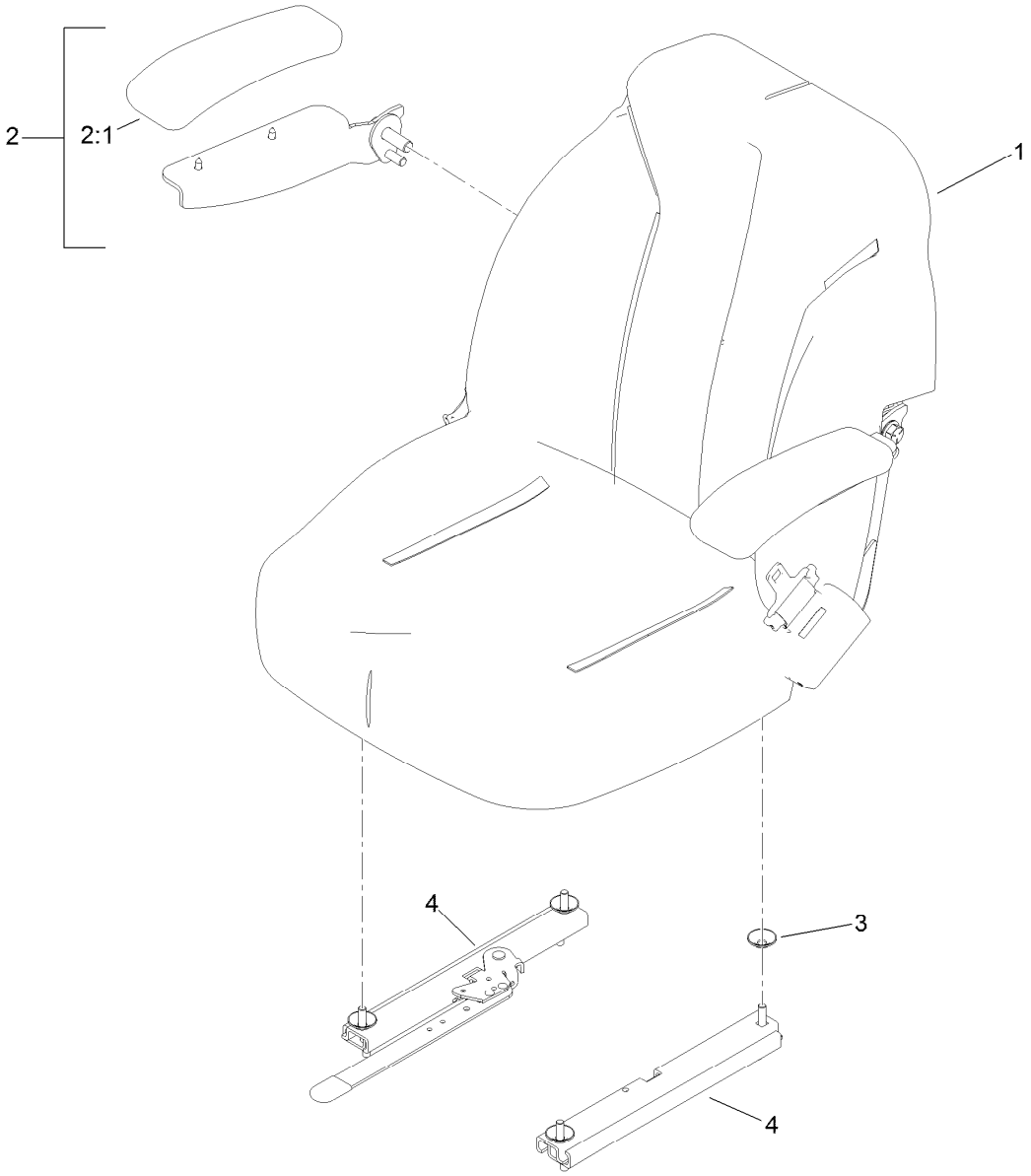


# Seat and Track Assembly No. 139-2679

| *Ref.* | *Part Number* | *Qty.* | *Description* |
|---|---|---|---|
| 1 | 139-2700 | 1 | Seat ASM |
| 2 | 121-3658 | 1 | RH Arm Rest Kit |
| 2:1 | 110-4163 | 1 | Cushion-Rest, Arm |
| 3 | 136-9002 | 4 | Spacer-Mounting |
| 4 | 126-2177 | 1 | Track-Seat |

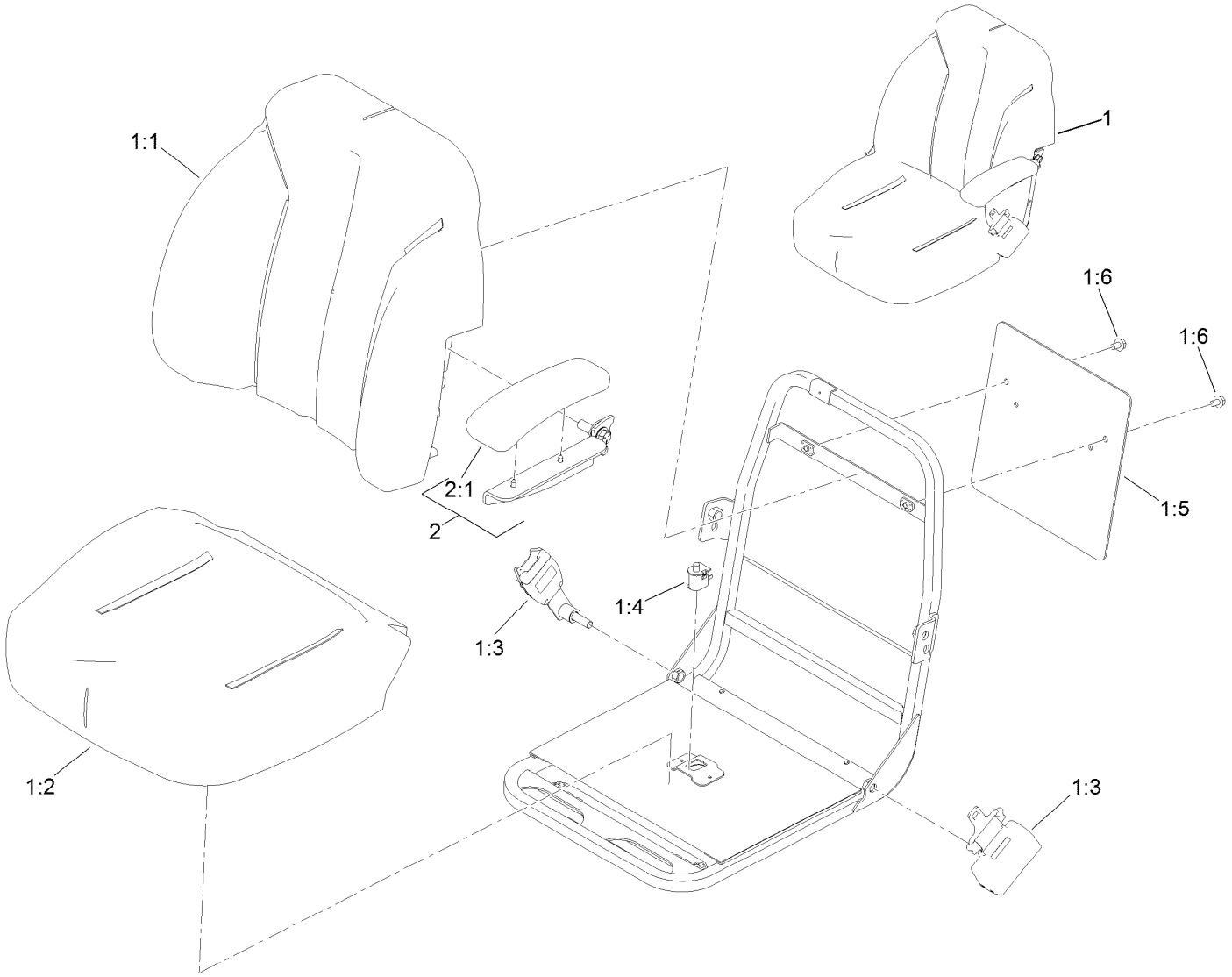


# Seat Assembly No. 139-2700

| *Ref.* | *Part Number* | *Qty.* | *Description* |
|---|---|---|---|
| 1 | 139-2680 | 1 | Seat ASM |
| 1:1 | 139-2705 | 1 | Cover-Seat, Back |
| 1:2 | 139-2706 | 1 | Cover-Seat, Bottom |
| 1:3 | 139-2707 | 1 | Seat Belt Kit |
| 1:4 | 82-2190 | 1 | Switch-Bail |
| 1:5 | 139-2701 | 1 | Plate-Decal |
| 1:6 | 3234-30 | 2 | Screw-HHF |
| 2 | 121-3660 | 1 | LH Arm Rest Kit |
| 2:1 | 110-4163 | 1 | Cushion-Rest, Arm |

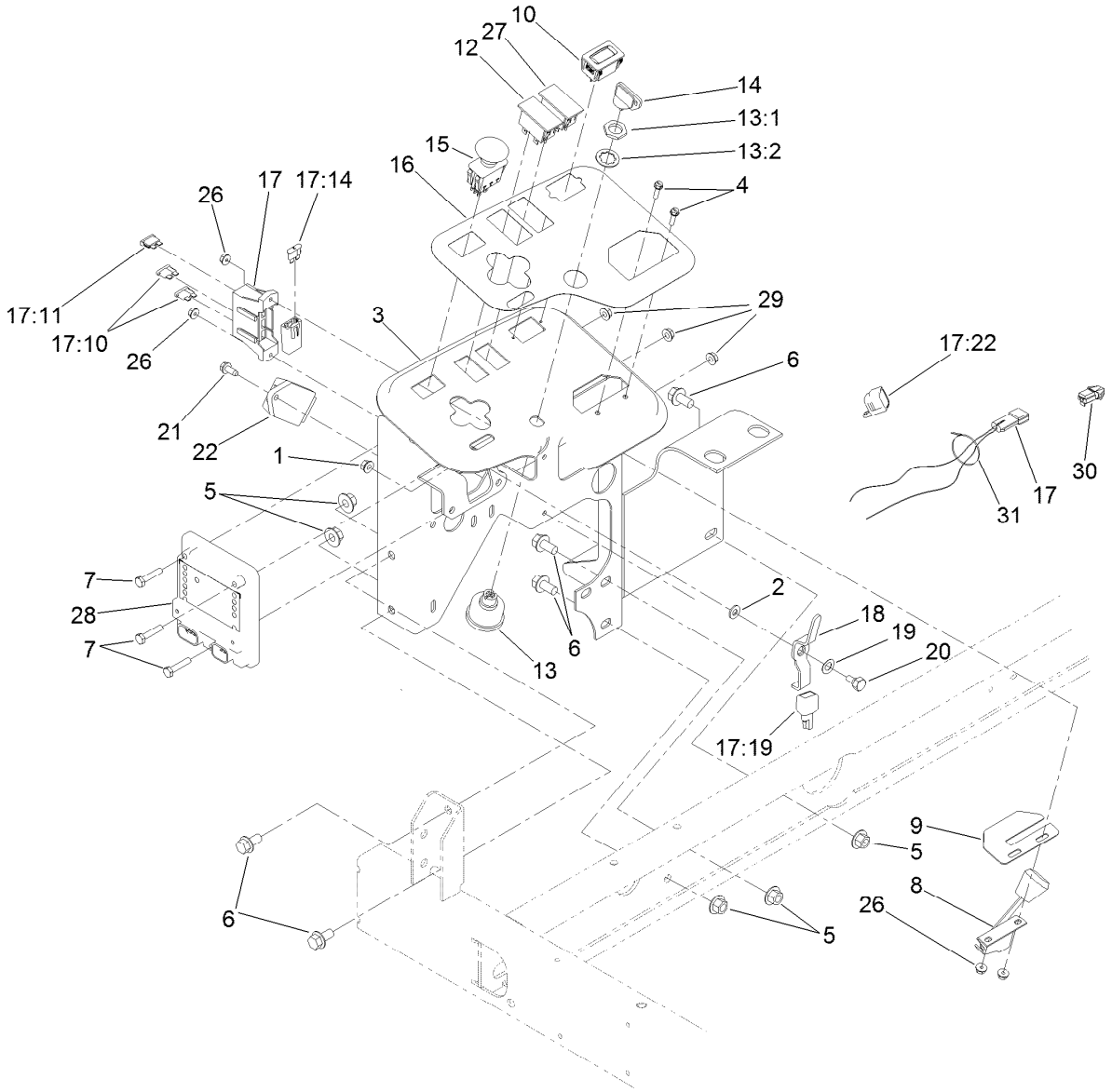


# Control Panel Assembly

| Ref. | Part Number | Qty. | Description |
|---|---|---|---|
| 1 | 32128-32 | 1 | Nut-HHF |
| 2 | 3256-22 | 1 | Washer-Flat |
| 3 | 115-3496-03 | 1 | Panel-Control |
| 4 | 32105-13 | 2 | Screw-HWH |
| 5 | 32128-43 | 5 | Nut-Flange |
| 6 | 3234-1 | 5 | Screw-HHF |
| 7 | 321-8 | 3 | Screw-HH |
| 8 | 138-1224 | 1 | Cable-Throttle |
| 9 | 104-0421 | 1 | Plate-Stop, Throttle |
| 10 | 120-2244 | 1 | Hourmeter |
| 12 | 100-8070 | 1 | Lamp-Warning |
| 13 | 104-2541 | 1 | Ignition Switch ASM |
| 13:1 | 218-461 | 1 | Nut-HH |
| 13:2 | 3254-5 | 1 | Washer-Lock |
| 14 | 63-8360 | 1 | Key-Ignition |
| 15 | 93-9999 | 1 | Switch-PTO |
| 16 | 139-6027 | 1 | Decal-Console |

| Ref. | Part Number | Qty. | Description |
|---|---|---|---|
| 17 | 122-1523 | 1 | Harness-Wire |
| 17:10 | 218-578 | 2 | Fuse-Blade, 10 Amp |
| 17:11 | 109355 | 1 | Fuse-Blade, 15 Amp |
| 17:14 | 94-6710 | 1 | Fuse-2 Amp |
| 17:19 | 100-4918 | 1 | Diode |
| 17:22 | 32180-156 | 1 | Cap-Plug, 6 Way |
| 18 | 99-3401 | 1 | Lever-Lock |
| 19 | 3290-477 | 1 | Washer-Curved |
| 20 | 63-3410 | 1 | Screw-Shoulder |
| 21 | 32144-10 | 1 | Screw-HWH |
| 22 | 98-7611 | 1 | Controller-Glow |
| 26 | 3290-148 | 4 | Nut-HF |
| 27 | 100-8071 | 1 | Lamp-Warning |
| 28 | 106-9277 | 1 | Module-Control, Standard |
| 29 | 32128-33 | 3 | Nut-HF |
| 30 | 104-4875 | 1 | Harness-Wire, Jumper |
| 31 | 3290-379 | 1 | Tie-Cable |

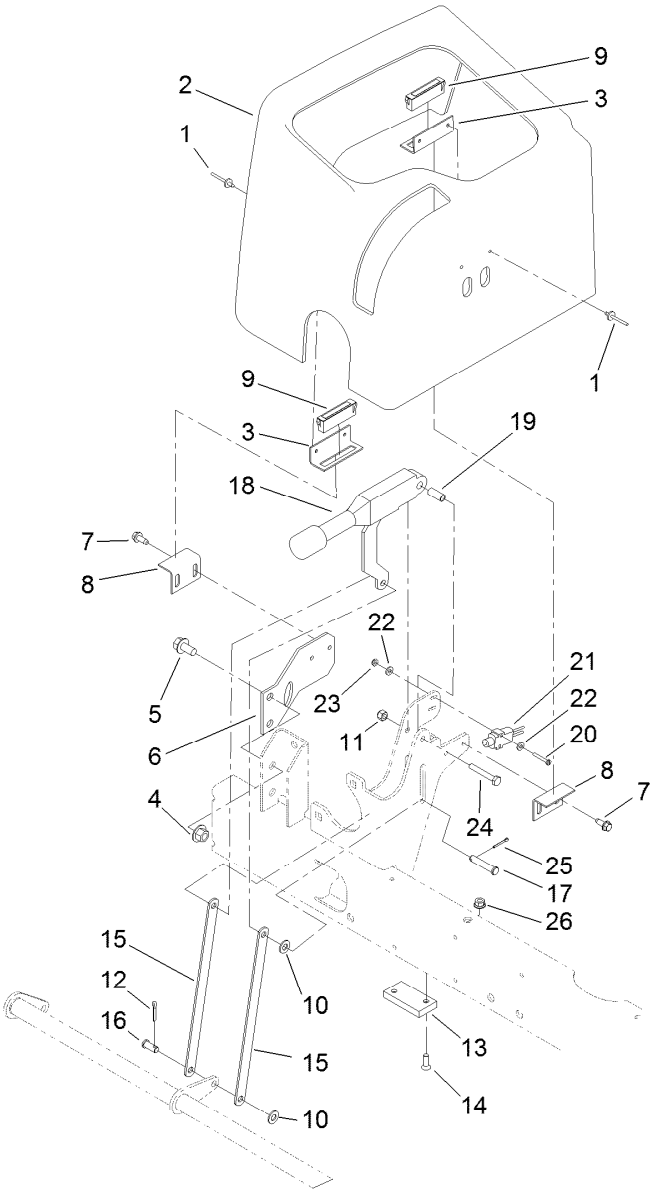


# Parking Brake and Dash Cover Assembly

| Ref. | Part Number | Qty. | Description |
|---|---|---|---|
| 1 | 3269-5 | 4 | Rivet-Pop |
| 2 | 95-8707 | 1 | Cover-Dash |
| 3 | 95-8763 | 2 | Bracket-Hold Down, Cover |
| 4 | 32128-43 | 2 | Nut-Flange |
| 5 | 3234-1 | 2 | Screw-HHF |
| 6 | 95-8764-0P | 1 | Support-Magnet |
| 7 | 32144-10 | 4 | Screw-HWH |
| 8 | 95-8765 | 2 | Bracket-Strike, Magnet |
| 9 | 58-4250 | 2 | Catch-Magnetic |
| 10 | 3256-23 | 2 | Washer-Plain |
| 11 | 3296-42 | 1 | Nut-Lock, NI |
| 12 | 3272-10 | 1 | Pin-Cotter |
| 13 | 95-8684 | 1 | Pad-Bumper |

| Ref. | Part Number | Qty. | Description |
|---|---|---|---|
| 14 | 3289-4 | 2 | Screw-FH |
| 15 | 104-4628 | 2 | Link-Brake, Parking |
| 16 | 283-62 | 1 | Pin-Clevis |
| 17 | 94-3829 | 1 | Pin-Clevis |
| 18 | 104-4817 | 1 | Lever-Brake |
| 19 | 87-4710 | 1 | Spacer-Brake, Parking |
| 20 | 32105-9 | 2 | Screw-HH |
| 21 | 95-8900 | 1 | Switch |
| 22 | 3256-21 | 4 | Washer-Flat |
| 23 | 3296-9 | 2 | Nut-Hex |
| 24 | 321-10 | 1 | Screw-HH |
| 25 | 3272-6 | 1 | Pin-Cotter |
| 26 | 104-7201 | 2 | Nut-HF, NI |

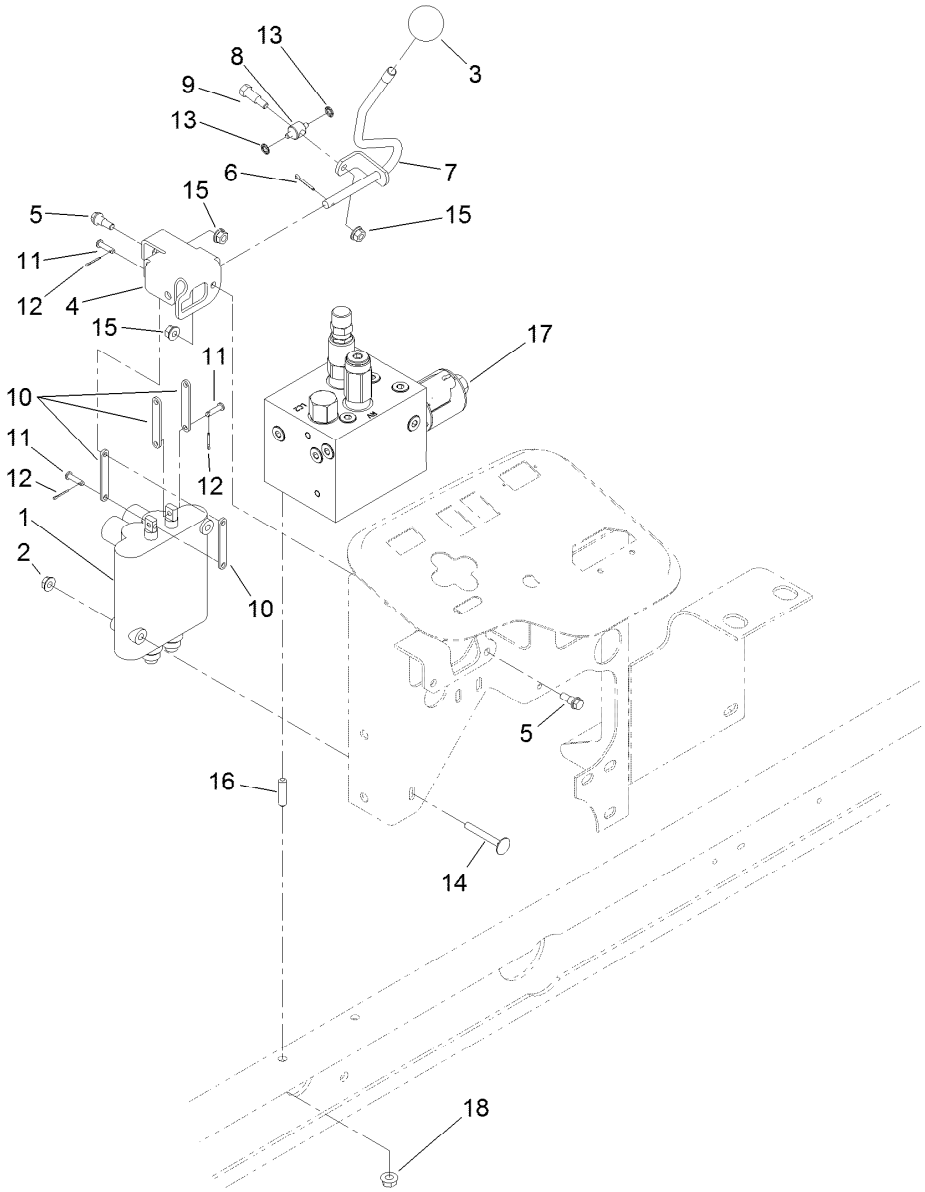


# 2-Spool Control Valve Assembly

| Ref. | Part Number | Qty. | Description |
|---|---|---|---|
| 1 | 95-8581 | 1 | 2-Spool Control Valve ASM |
| 2 | 32128-33 | 2 | Nut-HF |
| 3 | 233-42 | 1 | Knob |
| 4 | 95-8633 | 1 | Bracket-Valve, Actuator |
| 5 | 42-3560 | 2 | Bolt-Shoulder |
| 6 | 3272-6 | 1 | Pin-Cotter |
| 7 | 95-8635 | 1 | Lever-Valve |
| 8 | 95-8638 | 1 | Trunnion-Valve, Actuator |
| 9 | 92-8916 | 1 | Bolt-Shoulder |

| Ref. | Part Number | Qty. | Description |
|---|---|---|---|
| 10 | 95-8634 | 4 | Link |
| 11 | 283-16 | 3 | Pin-Clevis |
| 12 | 3272-1 | 3 | Pin-Cotter |
| 13 | 32151-106 | 2 | Ring-Retaining |
| 14 | 3230-33 | 2 | Screw-CARR |
| 15 | 32128-32 | 3 | Nut-HHF |
| 16 | 104-0430 | 2 | Stud |
| 17 | 121-3570 | 1 | Manifold ASM |
| 18 | 104-8300 | 2 | Nut-HF, NI |

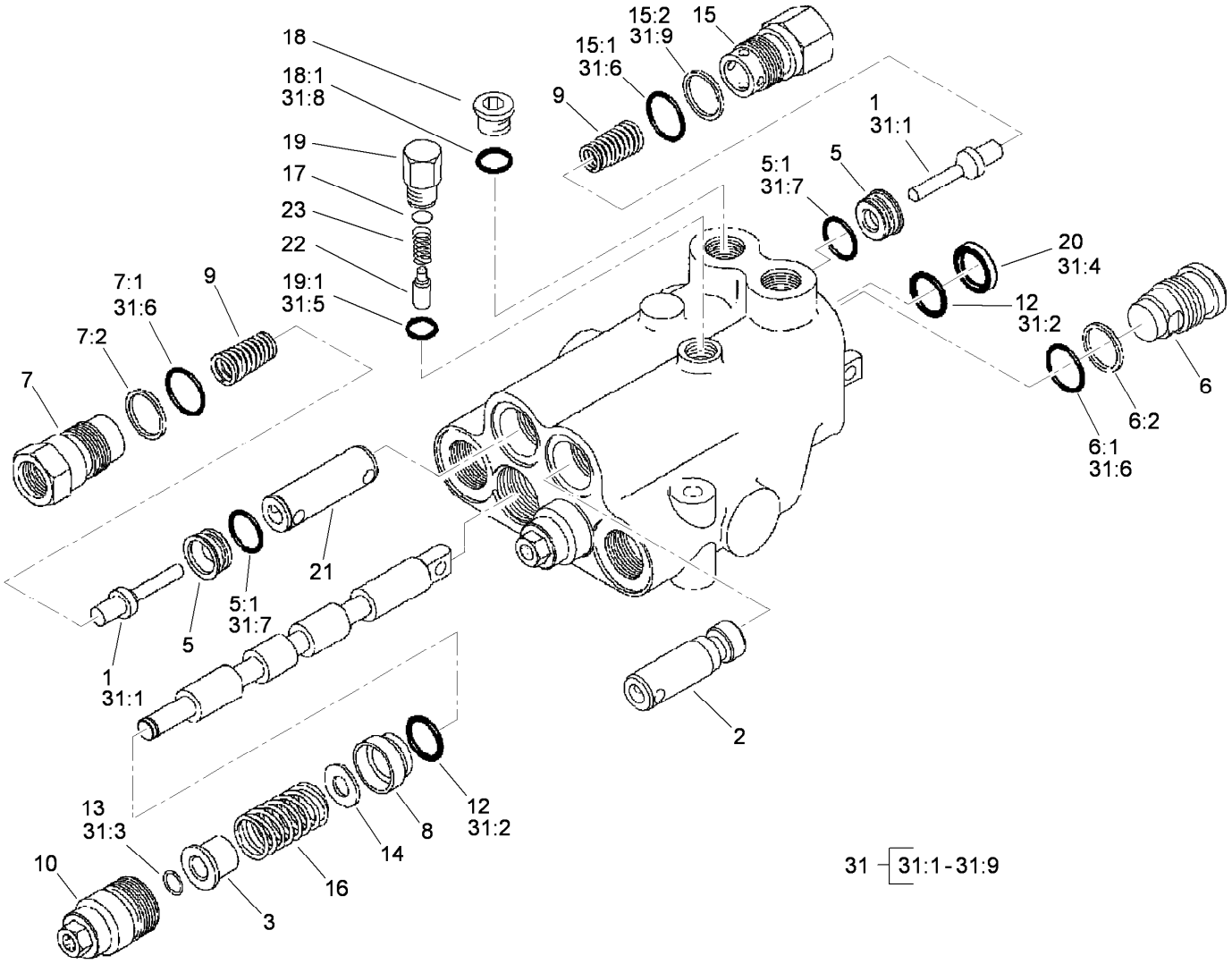


# 2-Spool Control Valve Assembly No. 95-8581

| Ref. | Part Number | Qty. | Description |
|---|---|---|---|
| 1 | 58-6290 | 3 | Poppet |
| 2 | 69-1840 | 1 | Plunger |
| 3 | 58-6310 | 2 | Spacer |
| 5 | 58-6330 | 3 | Seat |
| 5:1 | 58-6340 | 1 | O-Ring |
| 6 | 58-6350 | 1 | Plug |
| 6:1 | 60-5720 | 1 | O-Ring |
| 6:2 | 58-6370 | 1 | Washer |
| 7 | 69-1800 | 2 | Plug ASM |
| 7:1 | 60-5720 | 1 | O-Ring |
| 7:2 | 58-6370 | 1 | Washer |
| 8 | 58-6400 | 2 | Bushing |
| 9 | 69-1810 | 3 | Spring |
| 10 | 58-6420 | 2 | Cap |
| 12 | 58-6450 | 4 | O-Ring |
| 13 | 58-6460 | 2 | Ring-Retaining |
| 14 | 65-2770 | 2 | Washer |
| 15 | 99-3526 | 1 | Plug ASM |
| 15:1 | 60-5720 | 1 | O-Ring |
| 15:2 | 59-7730 | 1 | Washer-Backup |

| Ref. | Part Number | Qty. | Description |
|---|---|---|---|
| 16 | 99-3531 | 2 | Spring |
| 17 | 60-6450 | 1 | Disc |
| 18 | 353-989 | 1 | Plug-Hex, Hollow |
| 18:1 | 237-42 | 1 | O-Ring |
| 19 | 58-6780 | 1 | Plug |
| 19:1 | 58-6790 | 1 | O-Ring |
| 20 | 58-6320 | 2 | Wiper |
| 21 | 99-3528 | 1 | Plunger |
| 22 | 58-6770 | 1 | Plunger |
| 23 | 58-6760 | 1 | Spring |
| 31 | 99-3530 | 1 | Seal Kit |
| 31:1 | 58-6290 | 3 | Poppet |
| 31:2 | 58-6450 | 4 | O-Ring |
| 31:3 | 58-6460 | 2 | Ring-Retaining |
| 31:4 | 58-6320 | 2 | Wiper |
| 31:5 | 58-6790 | 1 | O-Ring |
| 31:6 | 60-5720 | 4 | O-Ring |
| 31:7 | 58-6340 | 2 | O-Ring |
| 31:8 | 237-42 | 1 | O-Ring |
| 31:9 | 59-7730 | 2 | Washer-Backup |

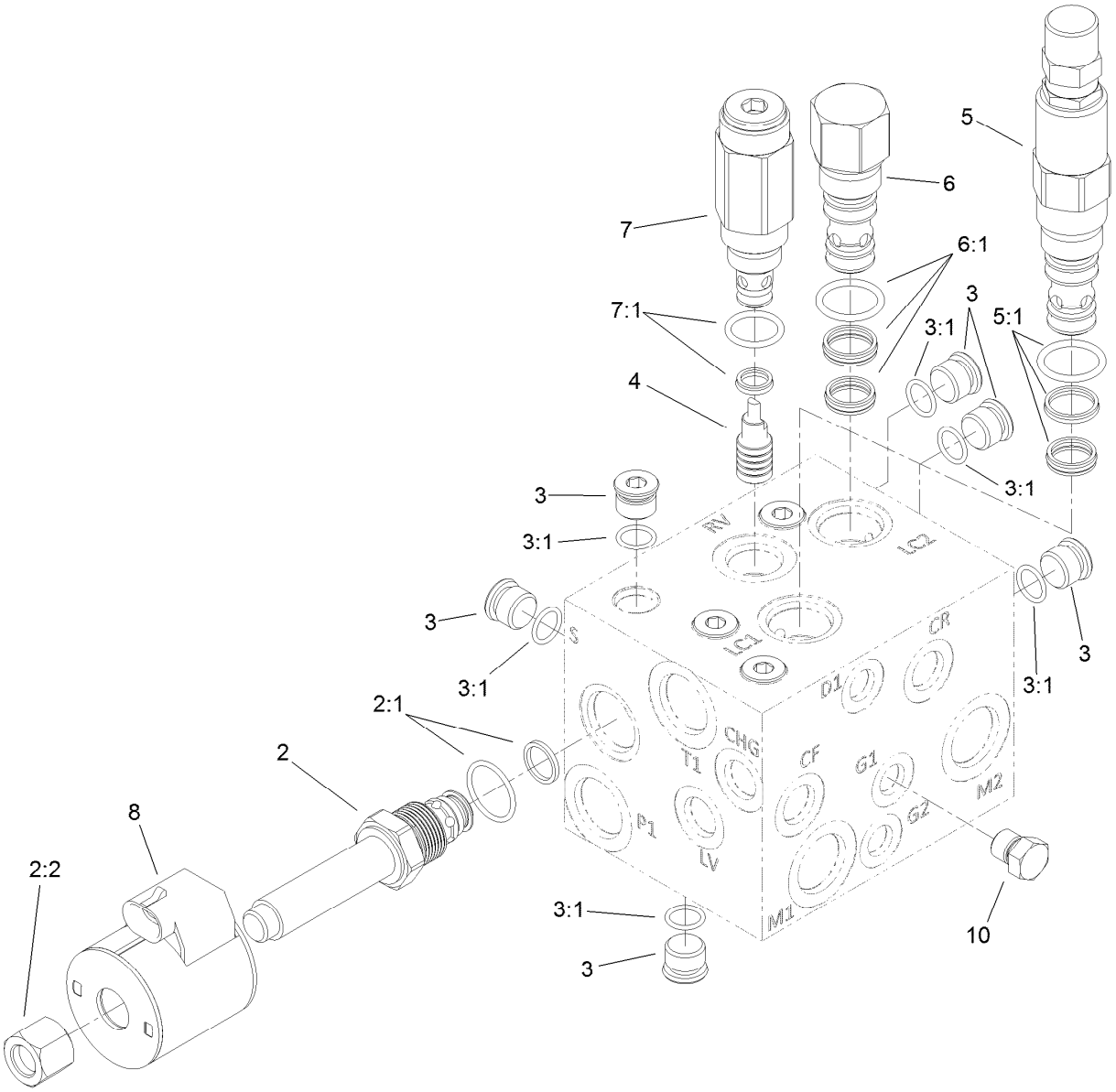


# Hydraulic Manifold Assembly No. 121-3570

| *Ref.* | *Part Number* | *Qty.* | *Description* |
|---|---|---|---|
| 2 | 110-8768 | 1 | Valve-Relief, Solenoid (3000 PSI) |
| 2:1 | 110-6316 | 1 | Seal Kit |
| 2:2 | 130-8180 | 1 | Nut-Coil (9/16-24 Unef-2B) |
| 3 | 353-512 | 9 | Plug |
| 3:1 | 237-78 | 1 | O-Ring |
| 4 | 105-9157 | 1 | Piston-Pilot |
| 5 | 119-2011 | 1 | Valve-Logic, Adjustable |
| 5:1 | 119-2159 | 1 | Seal Kit |
| 6 | 105-9153 | 1 | Element-Logic, Vented |
| 6:1 | 119-2159 | 1 | Seal Kit |
| 7 | 112-5259 | 1 | Valve-Relief |
| 7:1 | 105-9156 | 1 | Seal Kit |
| 8 | 110-6344 | 1 | Coil-12V, DC |
| 10 | 117-0115 | 1 | Plug |

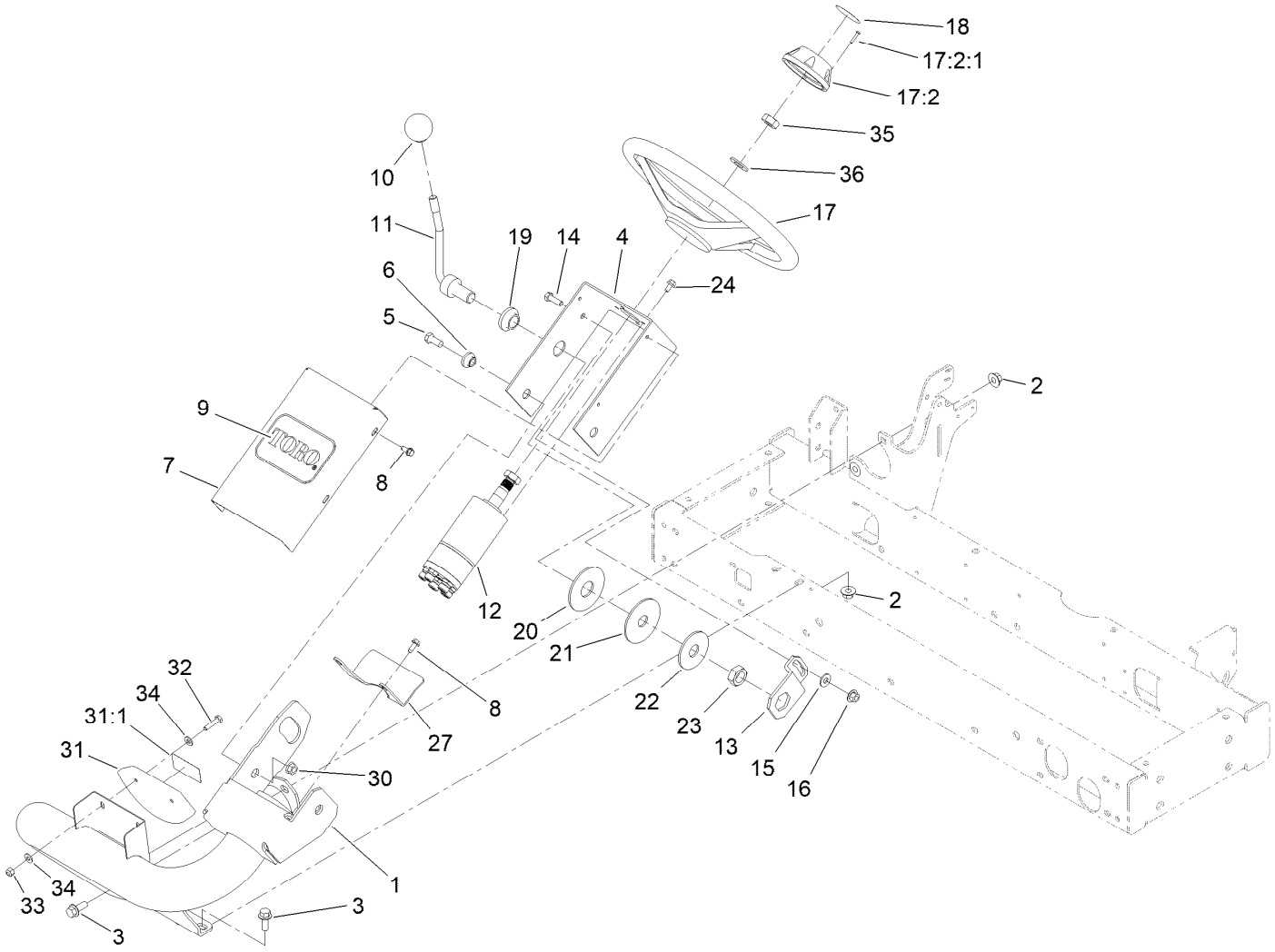


# Steering Arm Assembly

| Ref. | Part Number | Qty. | Description |
|---|---|---|---|
| 1 | 105-8536-01 | 1 | Arm-Steering |
| 2 | 32128-43 | 4 | Nut-Flange |
| 3 | 3234-11 | 4 | Screw-HHF |
| 4 | 104-5185-01 | 1 | Bracket-Valve, Steering |
| 5 | 323-5 | 2 | Screw-HH |
| 6 | 93-5988 | 2 | Hub-Pivot |
| 7 | 95-8794-01 | 1 | Cover-Valve, Steering |
| 8 | 32144-10 | 5 | Screw-HWH |
| 9 | 67-1300 | 1 | Decal |
| 10 | 233-48 | 1 | Knob |
| 11 | 95-8798-03 | 1 | Lever-Steering |
| 12 | 121-7856 | 1 | Steering Valve ASM |
| 13 | 80-2880 | 1 | Bracket-Tilt |
| 14 | 322-5 | 1 | Screw-HH |
| 15 | 3256-3 | 1 | Washer-Flat |
| 16 | 32128-44 | 1 | Nut |
| 17 | 75-0560 | 1 | Steering Wheel ASM |
| 17:2 | 68-5140 | 1 | Cap-Wheel, Steering |

| Ref. | Part Number | Qty. | Description |
|---|---|---|---|
| 17:2:1 | 32144-21 | 1 | Screw |
| 18 | 68-5370 | 1 | Decal |
| 19 | 99-3502 | 1 | Boss |
| 20 | 31-0390 | 1 | Disc-Friction |
| 21 | 82-9010 | 1 | Disc-Friction |
| 22 | 80-2930 | 1 | Washer-Flat |
| 23 | 3218-7 | 1 | Nut-Jam |
| 24 | 33103-012 | 4 | Screw-HHF |
| 27 | 99-3405-01 | 1 | Shield-Steering |
| 30 | 32128-21 | 2 | Nut-HF Lock |
| 31 | 100-4929 | 1 | Slope Indicator ASM |
| 31:1 | 121-3628 | 1 | Decal-Angle |
| 31:1 | 121-3598 | 1 | Decal-Danger, 17 Degree |
| 32 | 321-7 | 2 | Screw-HH |
| 33 | 3296-42 | 2 | Nut-Lock, NI |
| 34 | 3256-22 | 4 | Washer-Flat |
| 35 | 3296-33 | 1 | Nut-Lock, NI |
| 36 | 3256-27 | 1 | Washer-Flat |

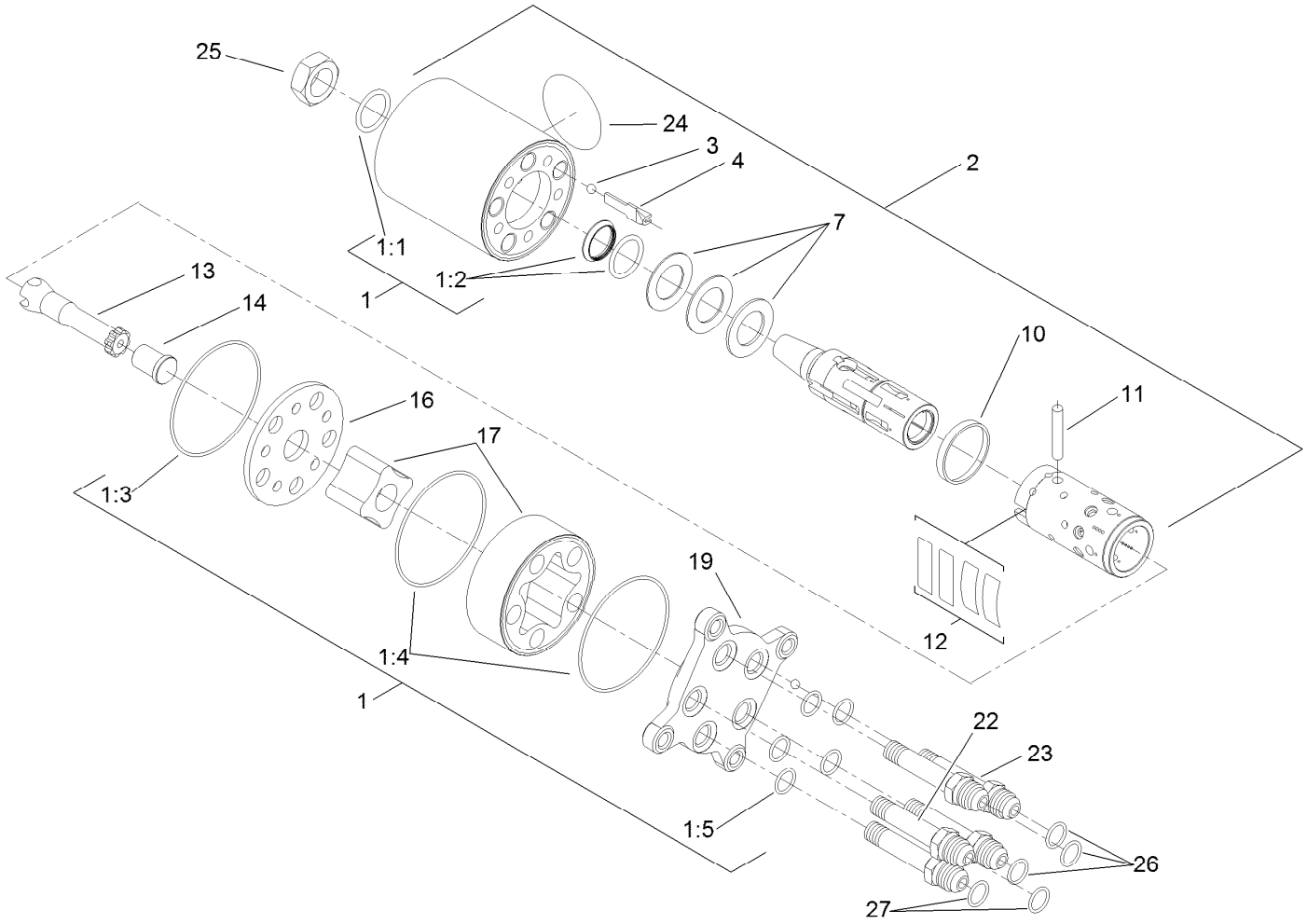


# Steering Valve Assembly No. 121-7856

| Ref. | Part Number | Qty. | Description |
|---|---|---|---|
| 1 | 106-6716 | 1 | Seal Kit |
| 1:1 | | 1 | Ring-Seal, Dust ● |
| 1:2 | | 1 | Seal-Shaft ● |
| 1:3 | | 1 | O-Ring ● |
| 1:4 | | 2 | O-Ring ● |
| 1:5 | | 5 | O-Ring ● |
| 2 | | 1 | Housing ● |
| 3 | | 1 | Ball ● |
| 4 | | 1 | Stop-Ball ● |
| 7 | | 1 | Bearing ASM ● |
| 10 | | 1 | Ring ● |
| 11 | | 1 | Pin-Cross ● |

| Ref. | Part Number | Qty. | Description |
|---|---|---|---|
| 12 | | 1 | Springs ● |
| 13 | | 1 | Shaft ● |
| 14 | | 1 | Spacer ● |
| 16 | | 1 | Plate-Distributor ● |
| 17 | | 1 | Gearwheel Set ● |
| 19 | | 1 | Cover-End ● |
| 22 | | 1 | Screw-Special ● |
| 23 | | 4 | Screw-Special ● |
| 24 | | 1 | Plate-Name ● |
| 25 | 3296-33 | 1 | Nut-Lock, NI |
| 26 | 237-22 | 3 | O-Ring |
| 27 | 237-21 | 2 | O-Ring |

● Not serviced separately

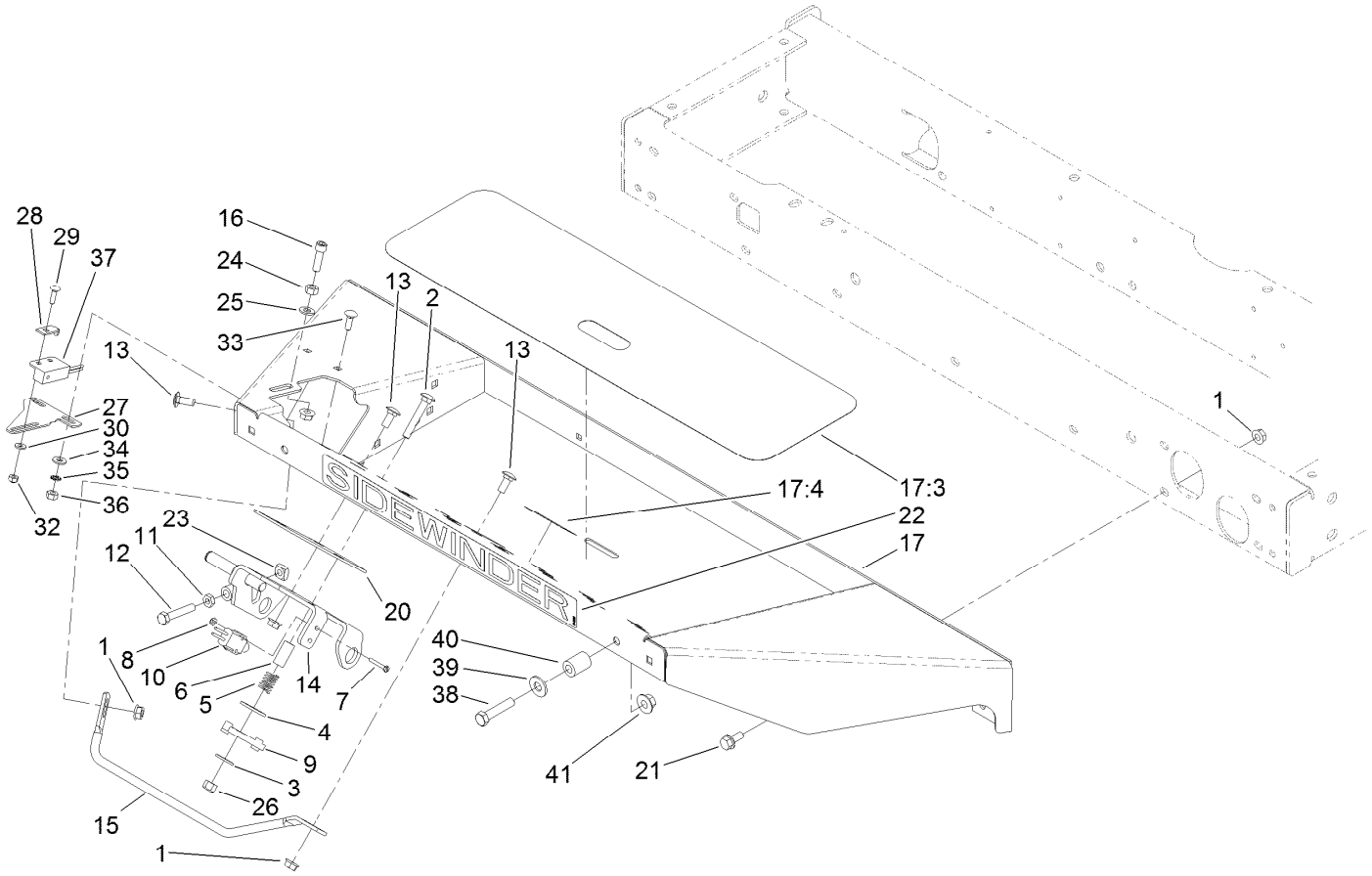


# Floorplate Assembly

| Ref. | Part Number | Qty. | Description |
|---|---|---|---|
| 1 | 32128-20 | 15 | Nut-HF |
| 2 | 3230-6 | 1 | Bolt-CARR |
| 3 | 3256-3 | 1 | Washer-Flat |
| 4 | 3256-40 | 1 | Washer-Flat |
| 5 | 65-9940 | 1 | Spring |
| 6 | 95-8866 | 1 | Tube-Arm, Rocker |
| 7 | 32105-9 | 2 | Screw-HH |
| 8 | 3296-9 | 2 | Nut-Hex |
| 9 | 99-3593 | 1 | Arm-Rocker |
| 10 | 95-8900 | 1 | Switch |
| 11 | 3218-2 | 1 | Nut-Hex Jam |
| 12 | 322-41 | 1 | Bolt-Hex,TAP |
| 13 | 3230-23 | 4 | Bolt-CARR |
| 14 | 95-8869-0P | 1 | Bracket-Pedal, Traction |
| 15 | 95-8893 | 1 | Bar-Deflector |
| 16 | 3274-22 | 1 | Screw-HSH |
| 17 | 106-4154 | 1 | Floorplate ASM |
| 17:3 | 99-3478 | 1 | Tread-Foot |
| 17:4 | 99-3444 | 1 | Decal-Mow / Transport |
| 20 | 106-2661-0P | 1 | Plate-Support |

| Ref. | Part Number | Qty. | Description |
|---|---|---|---|
| 21 | 3234-5 | 10 | Screw-HHF |
| 22 | 99-3388 | 1 | Decal |
| 23 | 99-3565 | 1 | Nut-Square |
| 24 | 3217-6 | 1 | Nut-Hex |
| 25 | 3256-23 | 1 | Washer-Plain |
| 26 | 3296-29 | 1 | Nut-Lock, NI |
| 27 | 100-4871 | 1 | Bracket-Switch, Neutral |
| 28 | 100-4872 | 1 | Plate-Switch, Neutral |
| 29 | 3229-20 | 1 | Screw-CARR |
| 30 | 3256-14 | 1 | Washer-Flat |
| 32 | 3296-2 | 1 | Nut-Lock, NI |
| 33 | 3229-1 | 2 | Screw-CARR |
| 34 | 3256-22 | 2 | Washer-Flat |
| 35 | 3255-7 | 2 | Washer-Lock/EXT |
| 36 | 3217-5 | 2 | Nut-Hex |
| 37 | 100-1270 | 1 | Switch-Proximity |
| 38 | 323-9 | 2 | Screw-HH |
| 39 | 3256-4 | 2 | Washer-Flat |
| 40 | 104-4613 | 2 | Tube-Latch |
| 41 | 32128-43 | 2 | Nut-Flange |

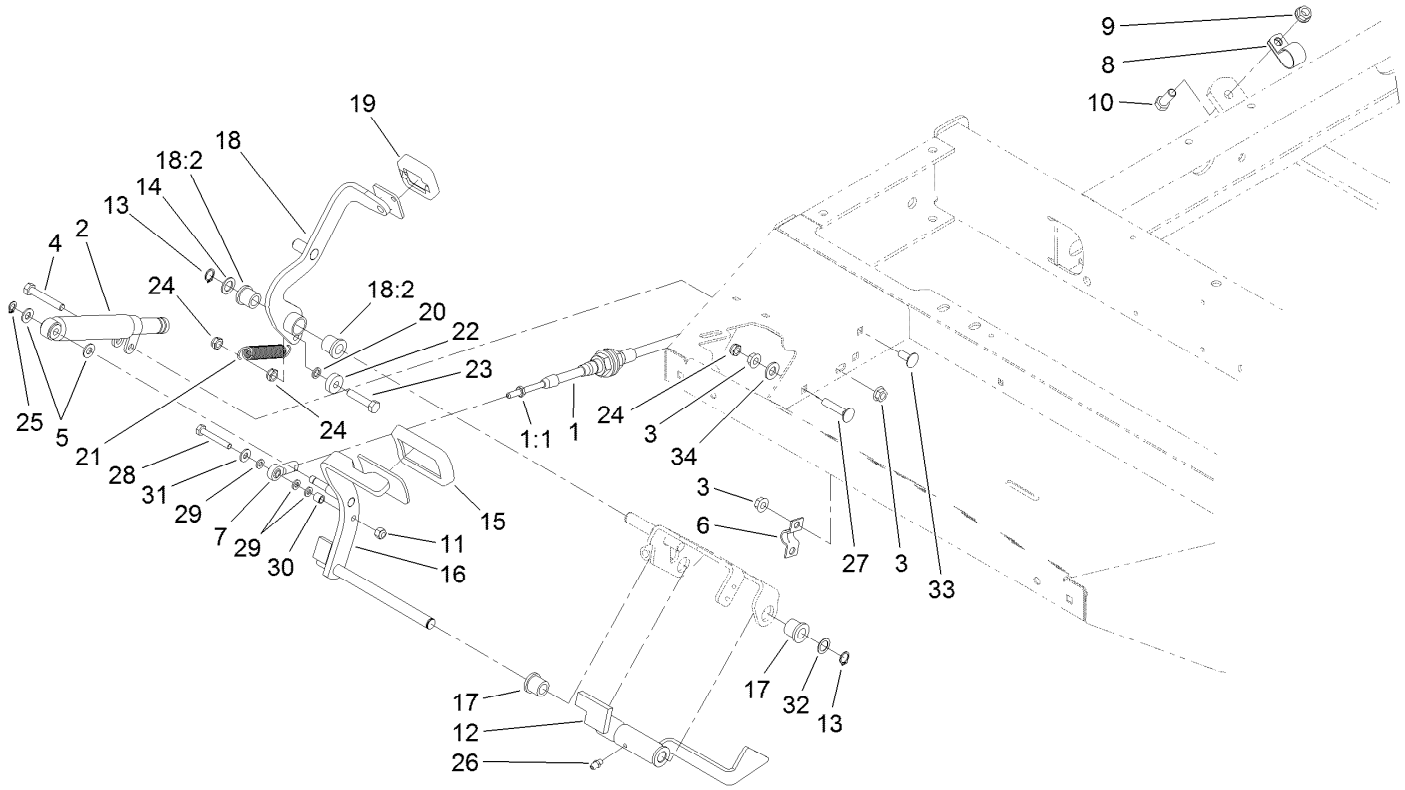


# Traction Pedal Assembly

| Ref. | Part Number | Qty. | Description |
|---|---|---|---|
| 1 | 100-4815 | 1 | Cable-Control, Traction |
| 1:1 | 3220-1 | 2 | Nut-Jam |
| 2 | 140-6248 | 1 | Damper |
| 3 | 32128-20 | 5 | Nut-HF |
| 4 | 322-10 | 1 | Screw-HH |
| 5 | 3256-23 | 2 | Washer-Plain |
| 6 | 93-2092 | 1 | Clamp-Cable |
| 7 | 2411-41 | 1 | Rod End-Ball Joint |
| 8 | 2412-41 | 1 | Clamp-R |
| 9 | 3290-357 | 1 | Nut-HSF |
| 10 | 323-6 | 1 | Screw-HH |
| 11 | 3296-42 | 1 | Nut-Lock, NI |
| 12 | 95-8861 | 1 | Slide |
| 13 | 32151-84 | 2 | Ring-Shaft, EXT |
| 14 | 41-8440 | 1 | Washer |
| 15 | 74-9100 | 1 | Pad-Pedal, Forward |
| 16 | 104-4852-03 | 1 | Pedal-Traction |
| 17 | 256-243 | 2 | Bearing-Flange |

| Ref. | Part Number | Qty. | Description |
|---|---|---|---|
| 18 | 99-3379 | 1 | Pedal-Reverse ASM |
| 18:2 | 256-243 | 2 | Bearing-Flange |
| 19 | 74-9110 | 1 | Pad-Pedal, Reverse |
| 20 | 75-5470 | 1 | Spacer-Bearing |
| 21 | 99-3476 | 1 | Spring-Extension |
| 22 | 251-259 | 1 | Bearing-Ball |
| 23 | 322-7 | 1 | Screw-HH |
| 24 | 3296-47 | 3 | Nut-Lock,NI |
| 25 | 32151-3 | 1 | Ring-Grip |
| 26 | 302-5 | 1 | Fitting-Grease |
| 27 | 3230-27 | 1 | Screw-CARR |
| 28 | 321-10 | 1 | Screw-HH |
| 29 | 33093-00 | 3 | Washer-Flat |
| 30 | 99-3545 | 1 | Spacer |
| 31 | 3256-22 | 1 | Washer-Flat |
| 32 | 73-0040 | 4 | Washer-Thrust |
| 33 | 3230-23 | 2 | Bolt-CARR |
| 34 | 3256-24 | 1 | Washer-Plain |

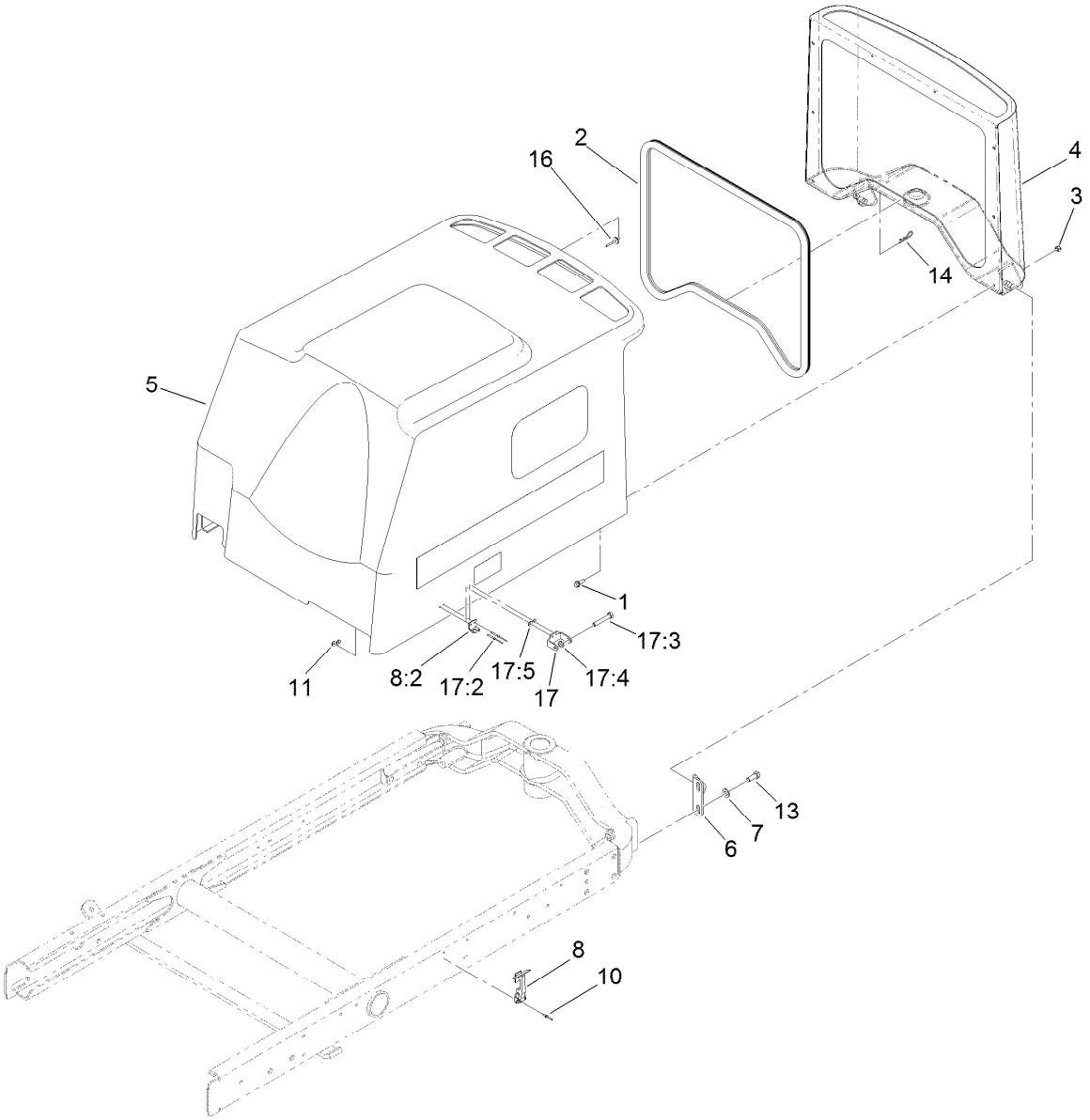


# Hood Assembly

| Ref. | Part Number | Qty. | Description |
|---|---|---|---|
| 1 | 3234-4 | 6 | Screw-HHF |
| 2 | 100-4932 | 1 | Trim-Seal |
| 3 | 3296-42 | 6 | Nut-Lock, NI |
| 4 | 104-4853-03 | 1 | Screen-Hood |
| 5 | 121-3631 | 1 | Hood ASM |
| 6 | 95-8728 | 2 | Bracket-Pivot, Hood |
| 7 | 3256-24 | 4 | Washer-Plain |
| 8 | 59-9740 | 2 | Flex Draw Latch ASM |
| 8:2 | 249-40 | 1 | Keeper |
| 10 | 3290-55 | 4 | Rivet-Pop |

| Ref. | Part Number | Qty. | Description |
|---|---|---|---|
| 11 | 3269-10 | 4 | Washer-Back |
| 13 | 323-6 | 4 | Screw-HH |
| 14 | 3290-467 | 1 | Pin-Hair |
| 16 | 3269-21 | 2 | Rivet-Pop |
| 17 | 119-2004 | 1 | CE Latch Kit |
| 17:2 | 107-0333 | 2 | Rivet-Pop |
| 17:3 | 322-10 | 1 | Screw-HH |
| 17:4 | 3296-47 | 1 | Nut-Lock,NI |
| 17:5 | 3269-10 | 2 | Washer-Back |

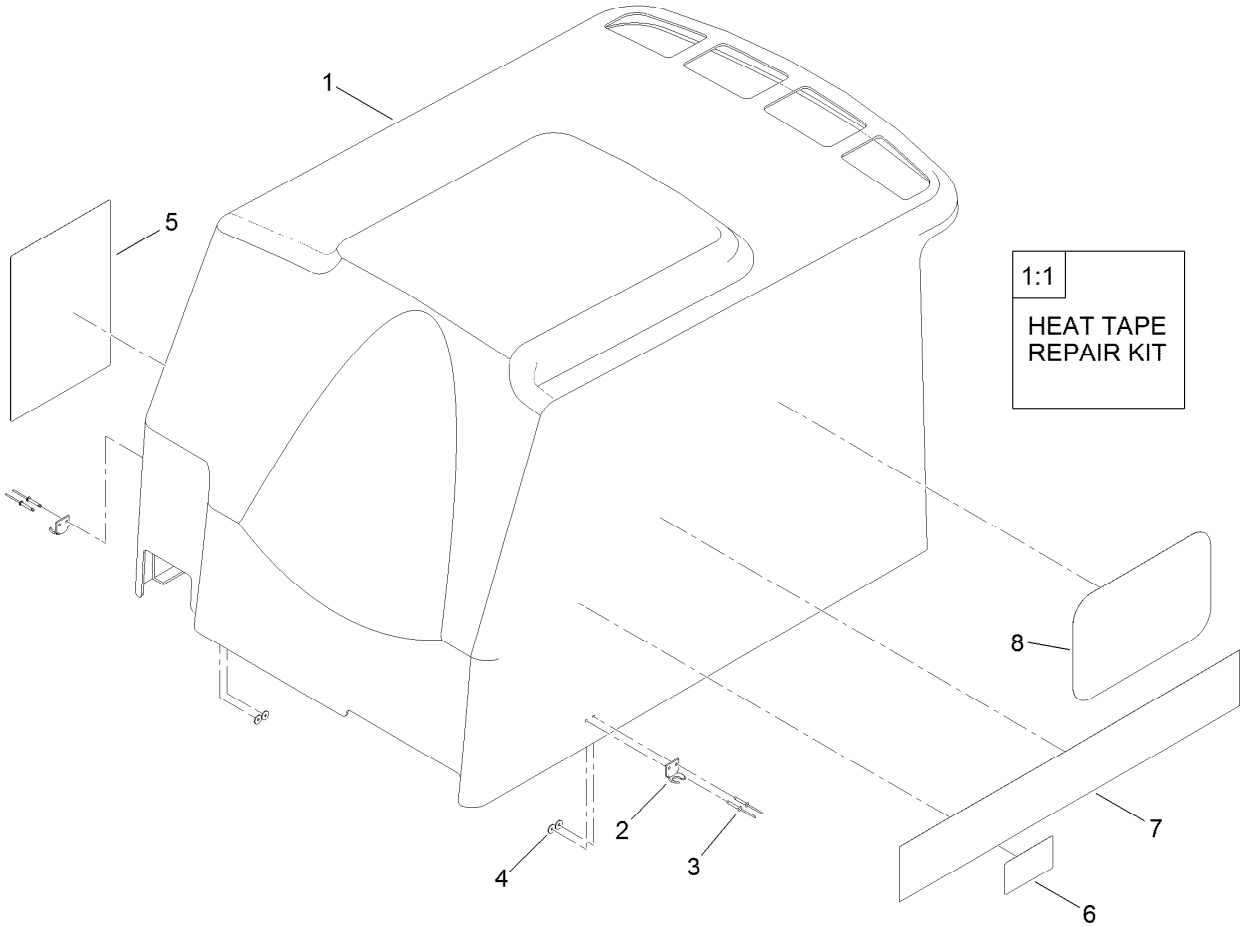


# Hood Assembly No. 121-3631

| Ref. | Part Number | Qty. | Description |
|---|---|---|---|
| 1 | | 1 | Hood ● |
| 1:1 | 106-8115 | 1 | Heat Tape Repair Kit |
| 2 | 249-40 | 2 | Keeper |
| 3 | 107-0333 | 4 | Rivet-Pop |
| 4 | 3269-10 | 4 | Washer-Back |
| 5 | 138-6974 | 1 | Decal-Service, Gm3500 |
| 6 | 117-3270 | 1 | Decal-Danger |
| 7 | 104-5152 | 2 | Decal-Hood |
| 8 | 66-6140 | 2 | Decal |

● Not serviced separately

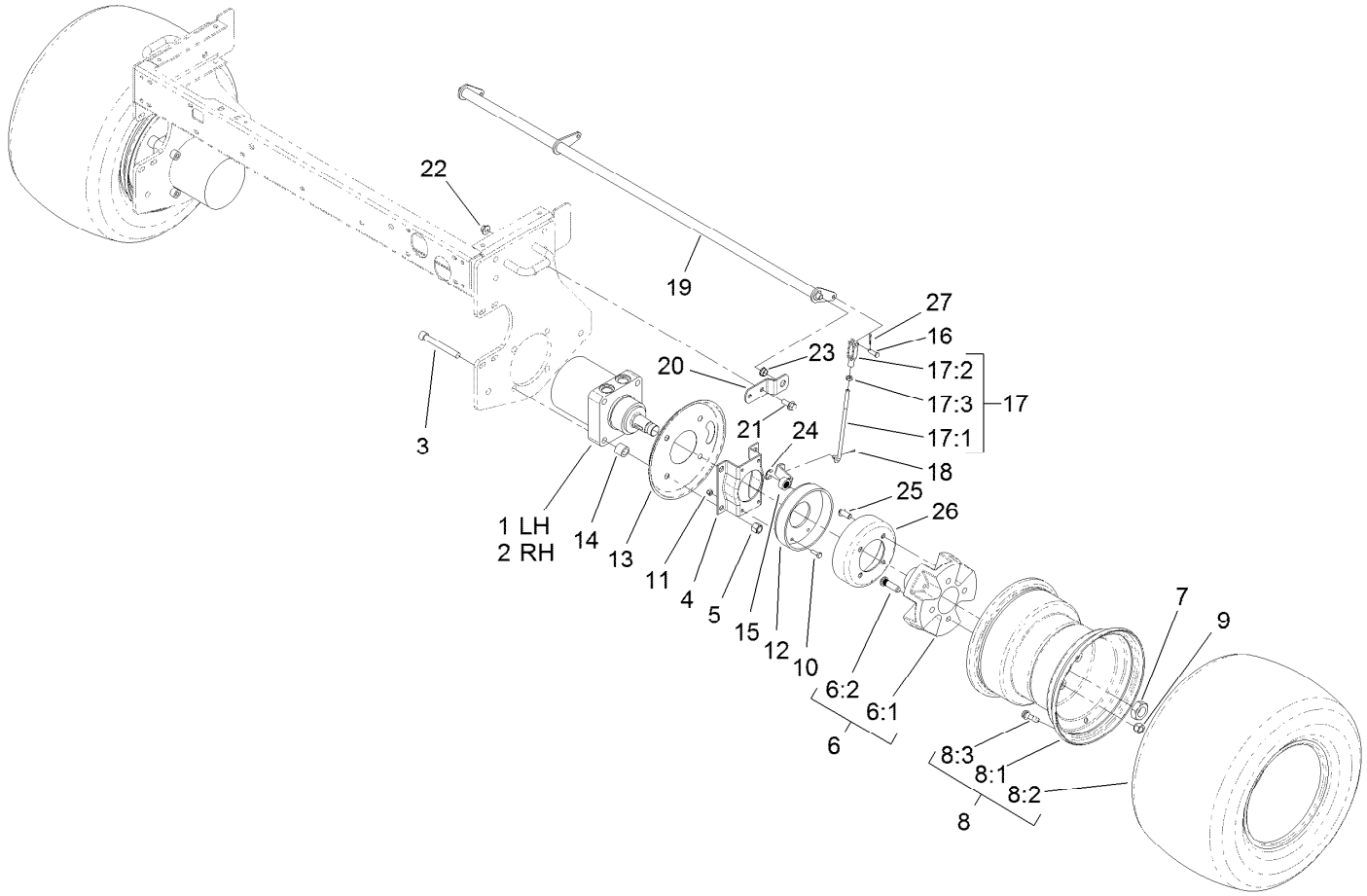


# Wheel Motor and Brake Assembly

| Ref. | Part Number | Qty. | Description |
|---|---|---|---|
| 1 | 110-8785 | 1 | HYD Motor ASM (CCW) |
| 2 | 110-8786 | 1 | HYD Motor ASM (CW) |
| 3 | 3274-99 | 8 | Screw-HSH |
| 4 | 84-2000-0P | 2 | Bracket-Brake |
| 5 | 3296-23 | 8 | Nut-Lock, NI |
| 6 | | 2 | Wheel Hub/Stud ASM ● |
| 6:1 | 104-0462 | 1 | Hub-Wheel, Spacer |
| 6:2 | 10-6830 | 4 | Stud-Type, Drive |
| 7 | 26-3790 | 2 | Nut-Lock |
| 8 | | 2 | Tire And Rim ASM ● |
| 8:1 | 121-3548 | 1 | Rim |
| 8:2 | 117-5125 | 1 | Tire |
| 8:3 | 232-27 | 1 | Stem-Valve |
| 9 | 242-50 | 8 | Nut-Lug |
| 10 | 321-5 | 8 | Screw-HH |
| 11 | 3296-42 | 8 | Nut-Lock, NI |
| 12 | 104-7705 | 2 | Brake ASM |
| 13 | 104-0485-0P | 2 | Shield-Wheel |

| Ref. | Part Number | Qty. | Description |
|---|---|---|---|
| 14 | 119-8238 | 8 | Spacer-Deck Pulley |
| 15 | 114-2726 | 2 | Lever-Brake |
| 16 | 283-1 | 2 | Pin-Clevis |
| 17 | 115-6672 | 2 | Brake Lever ASM |
| 17:1 | 104-4627 | 1 | Rod-Adjusting |
| 17:2 | 1-303105 | 1 | Yoke-Adjustable |
| 17:3 | 3220-2 | 1 | Nut-Jam |
| 18 | 3272-6 | 2 | Pin-Cotter |
| 19 | 104-4625-03 | 1 | Shaft-Pivot, Brake |
| 20 | 95-8683 | 2 | Bracket-Pivot, Brake |
| 21 | 3234-11 | 4 | Screw-HHF |
| 22 | 32128-43 | 4 | Nut-Flange |
| 23 | 256-156 | 2 | Bushing-Flange |
| 24 | 104-7706 | 2 | E-Ring, Bowed |
| 25 | 3274-105 | 8 | Screw-HSBH |
| 26 | 104-4809 | 2 | Drum-Brake |
| 27 | 3272-10 | 2 | Pin-Cotter |

● Not serviced separately

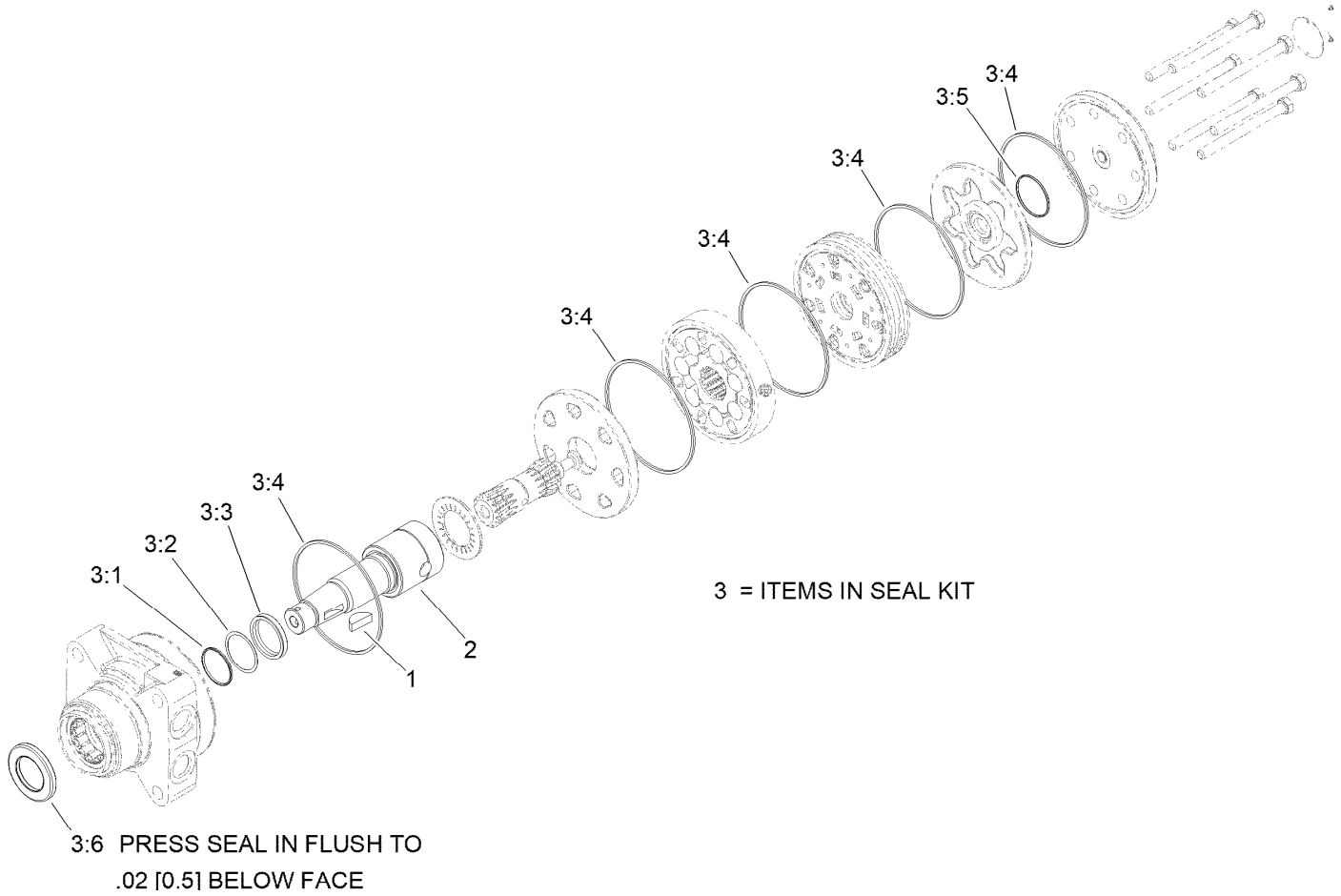


# Hydraulic Motor Assembly No. 110-8785

| *Ref.* | *Part Number* | *Qty.* | *Description* |
|---|---|---|---|
| 1 | 3257-42 | 1 | Key-Woodruff |
| 2 | 99-3090 | 1 | Shaft-Coupling |
| 3 | 100-6131 | 1 | Seal Kit |
| 3:1 | | 1 | Ring-Back Up ● |
| 3:2 | | 1 | Washer-Back Up ● |
| 3:3 | | 1 | Seal-Shaft ● |
| 3:4 | | 5 | Seal-Ring ● |
| 3:5 | | 1 | Seal-Commutator ● |
| 3:6 | | 1 | Seal-Dirt And Water ● |

● Not serviced separately

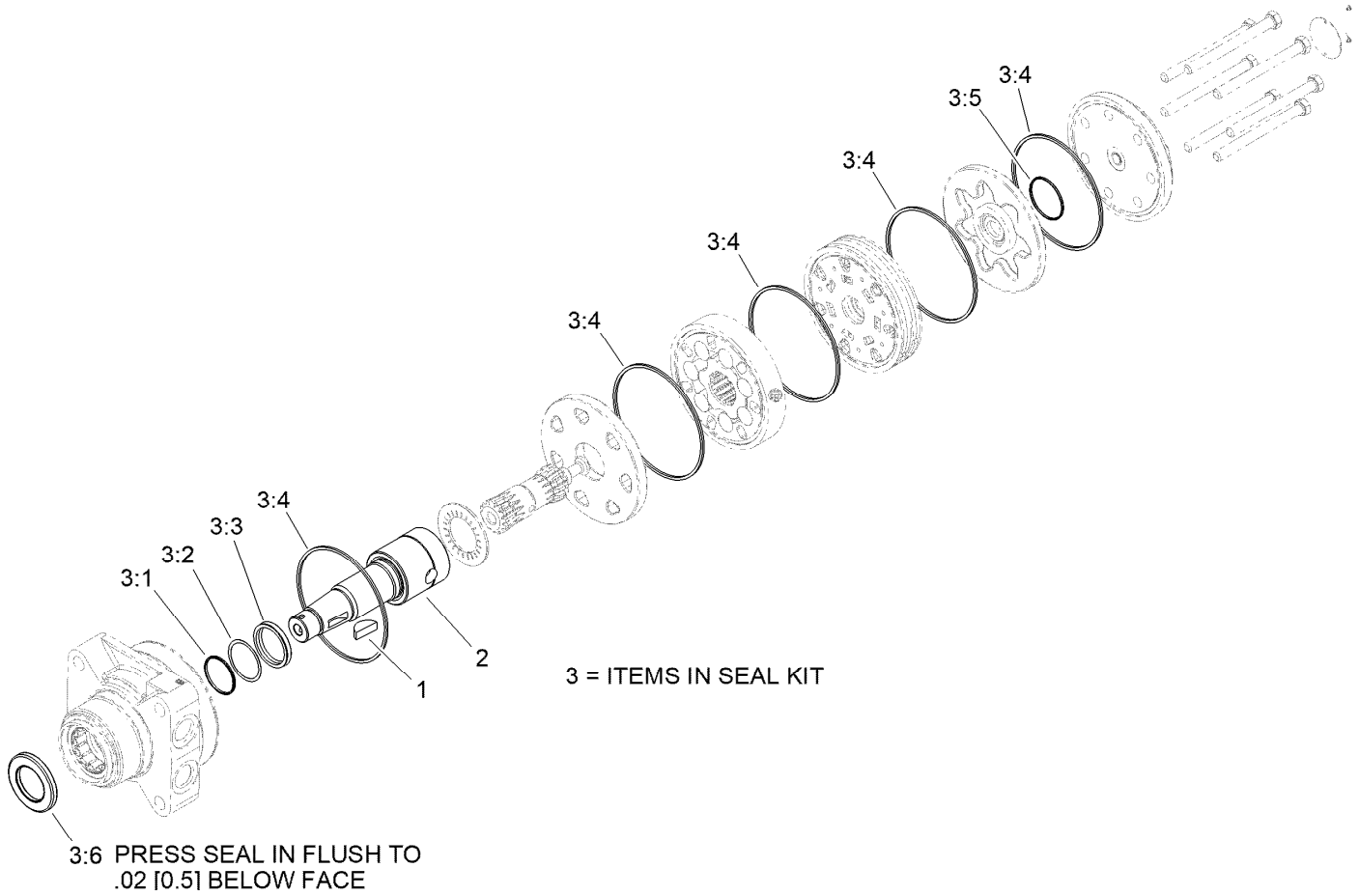


# Hydraulic Motor Assembly No. 110-8786

| *Ref.* | *Part Number* | *Qty.* | *Description* |
|---|---|---|---|
| 1 | 3257-42 | 1 | Key-Woodruff |
| 2 | 99-3090 | 1 | Shaft-Coupling |
| 3 | 100-6131 | 1 | Seal Kit |
| 3:1 | | 1 | Ring-Back Up ● |
| 3:2 | | 1 | Washer-Back Up ● |
| 3:3 | | 1 | Seal-Shaft ● |
| 3:4 | | 5 | Seal-Ring ● |
| 3:5 | | 1 | Seal-Commutator ● |
| 3:6 | | 1 | Seal-Dirt And Water ● |

● Not serviced separately

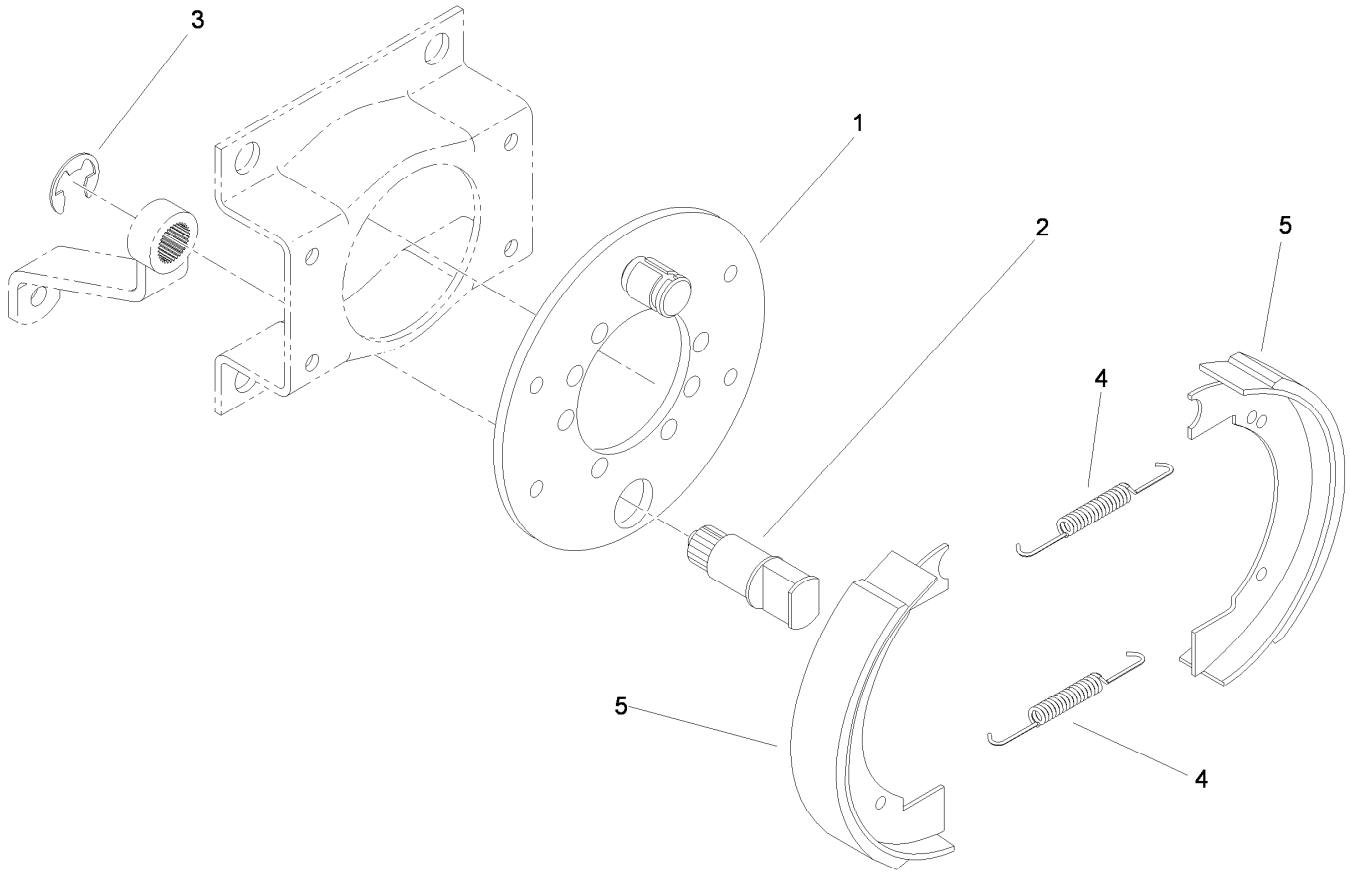


# Brake Assembly No. 104-7705

| *Ref.* | *Part Number* | *Qty.* | *Description* |
|---|---|---|---|
| 1 | 70-9870 | 1 | Plate-Backing |
| 2 | 104-7707 | 1 | Shaft-Cam, Brake |
| 3 | 104-7706 | 1 | E-Ring, Bowed |
| 4 | 70-9880 | 2 | Spring-Return |
| 5 | 70-9840 | 2 | Shoe-Brake |

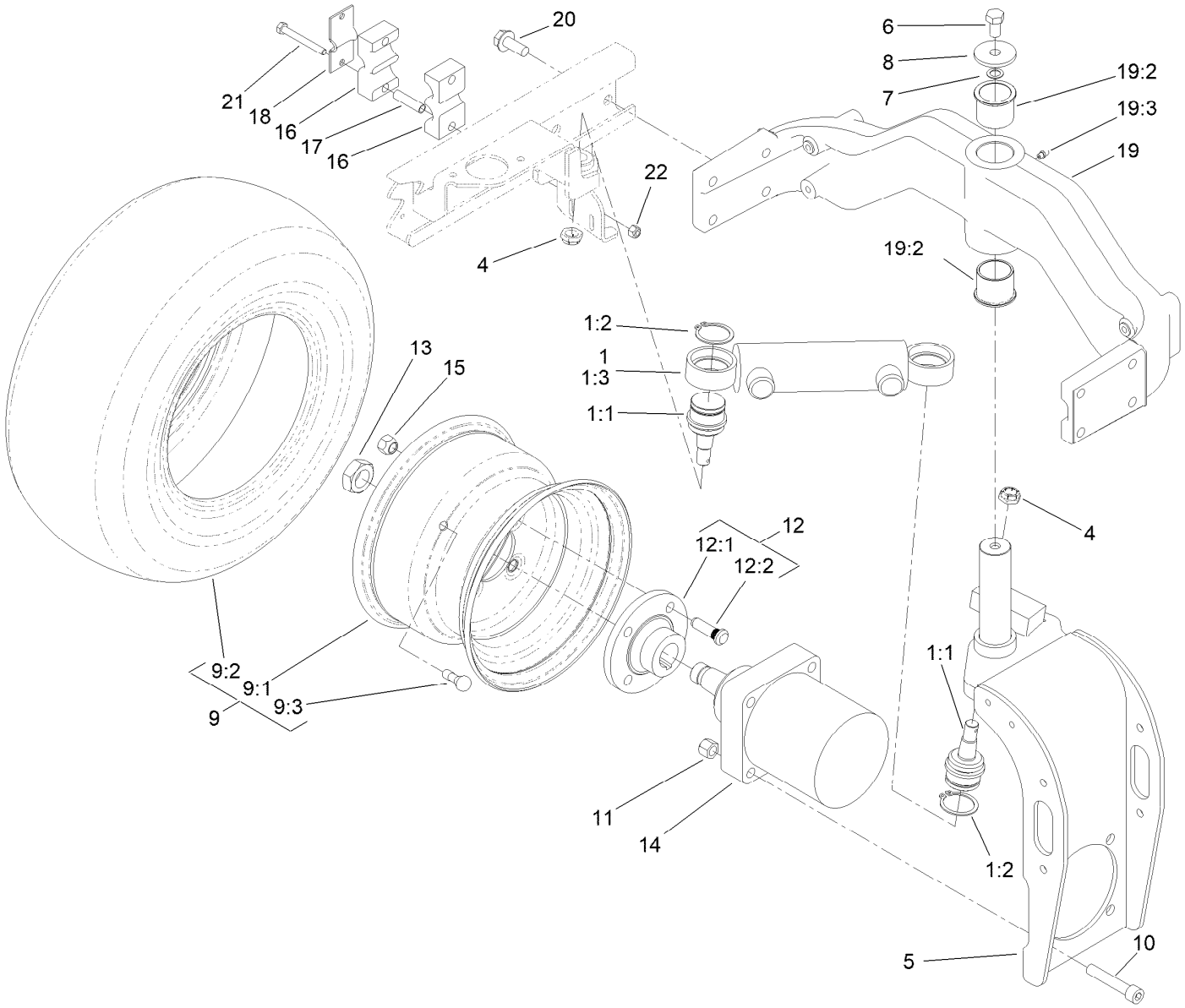


# Rear Fork and Wheel Assembly

| Ref. | Part Number | Qty. | Description |
|---|---|---|---|
| 1 | | 1 | Steering Cylinder ASM ● |
| 1:1 | 121-3605 | 2 | Ball Joint |
| 1:2 | 32151-104 | 2 | Ring-Retaining, External |
| 1:3 | 121-3653 | 1 | Cylinder-HYD |
| 4 | 121-3611 | 2 | Nut-Hex, Flextop |
| 5 | 95-8905-01 | 1 | Fork-Rear |
| 6 | 325-3 | 1 | Screw-HH |
| 7 | 3255-2 | 1 | Washer-Lock, EXT |
| 8 | 75-7730 | 1 | Washer-Thrust |
| 9 | | 1 | Wheel And Tire ASM ● |
| 9:1 | 117-5129 | 1 | Rim |
| 9:2 | 115-1572 | 1 | Tire |
| 9:3 | 232-27 | 1 | Stem-Valve |
| 10 | 3274-93 | 4 | Screw-HSH |
| 11 | 3296-23 | 4 | Nut-Lock, NI |

| Ref. | Part Number | Qty. | Description |
|---|---|---|---|
| 12 | | 1 | Wheel Hub/Stud ASM ● |
| 12:1 | 10-6870-03 | 1 | Hub-Wheel |
| 12:2 | 10-6830 | 4 | Stud-Type, Drive |
| 13 | 26-3790 | 1 | Nut-Lock |
| 14 | 95-8694 | 1 | HYD Motor ASM |
| 15 | 242-50 | 4 | Nut-Lug |
| 16 | 82-8170 | 2 | Clamp |
| 17 | 93-7960 | 2 | Spacer |
| 18 | 93-7961 | 1 | Clamp-Drain, Case |
| 19 | 107-7828 | 1 | Rear Casting ASM |
| 19:2 | 95-8805 | 2 | Bushing |
| 19:3 | 302-5 | 1 | Fitting-Grease |
| 20 | 3234-38 | 8 | Screw-HHF |
| 21 | 322-13 | 2 | Screw-HH |
| 22 | 3296-29 | 2 | Nut-Lock, NI |

● Not serviced separately

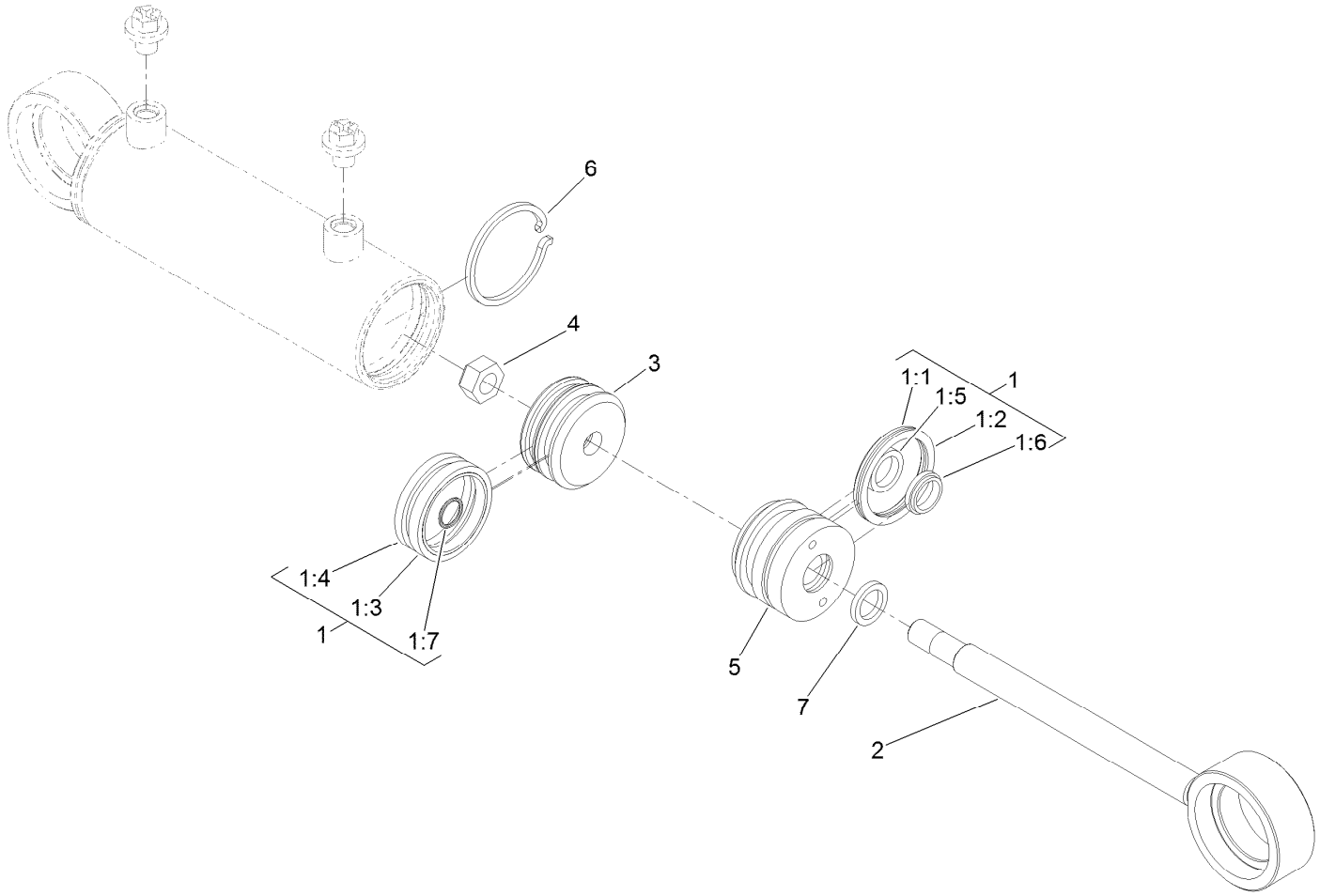


# Hydraulic Cylinder Assembly No. 121-3653

| *Ref.* | *Part Number* | *Qty.* | *Description* |
|---|---|---|---|
| 1 | 136-3278 | 1 | Seal Kit |
| 1:1 | | 1 | O-Ring ● |
| 1:2 | | 1 | Backup ● |
| 1:3 | | 1 | Psp Seal ● |
| 1:4 | | 1 | Wear Ring ● |
| 1:5 | | 1 | Bt Seal ● |
| 1:6 | | 1 | Dust Seal ● |
| 1:7 | | 1 | O-Ring ● |
| 2 | | 1 | Rod ● |
| 3 | | 1 | Piston ● |
| 4 | | 1 | Head ● |
| 5 | | 1 | Lock Nut ● |
| 6 | | 1 | Retaining Ring ● |
| 7 | | 1 | Square O-Ring ● |

● Not serviced separately

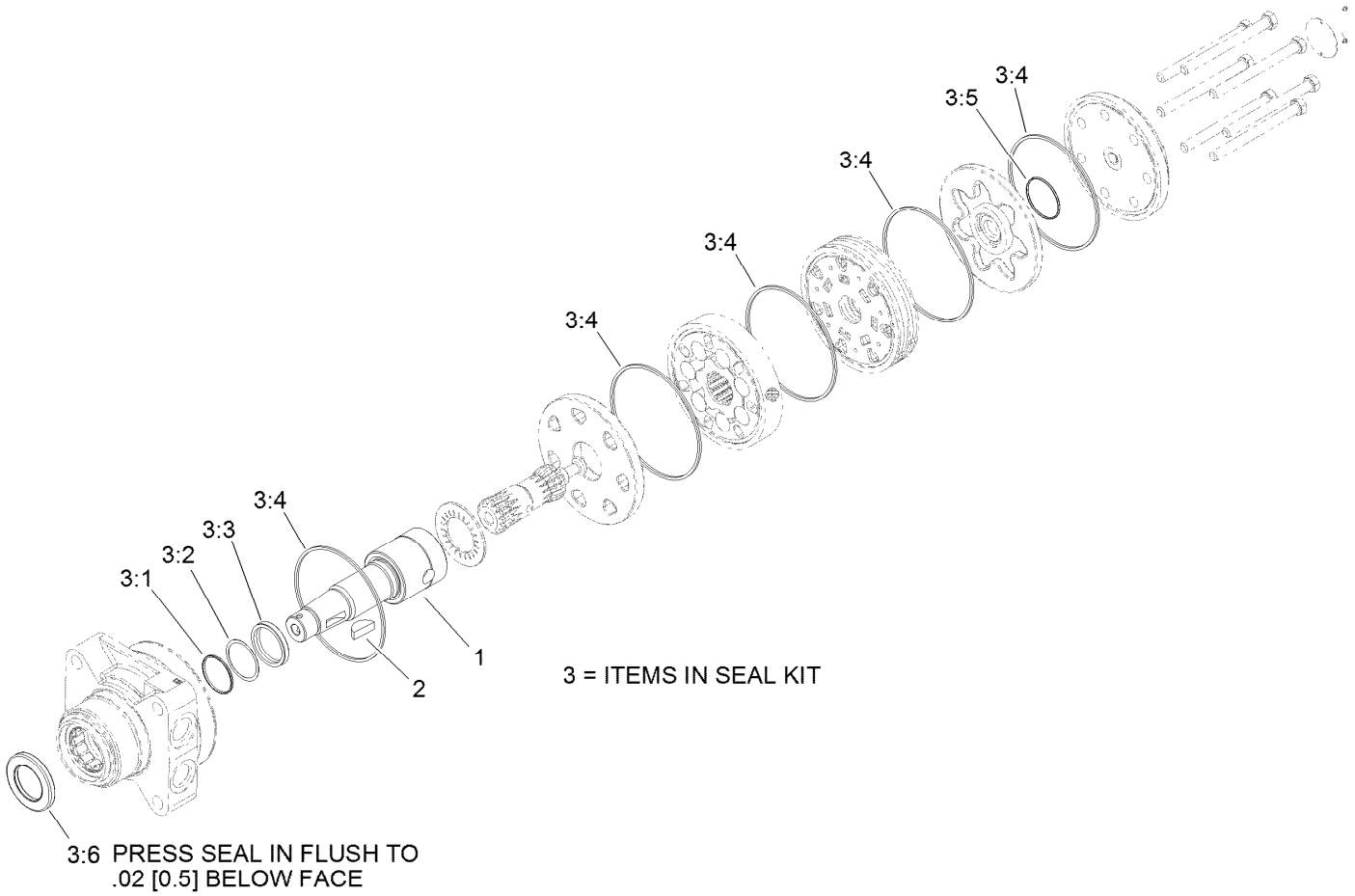


# Hydraulic Motor Assembly No. 95-8694

| *Ref.* | *Part Number* | *Qty.* | *Description* |
|---|---|---|---|
| 1 | 99-3090 | 1 | Shaft-Coupling |
| 2 | 3257-42 | 1 | Key-Woodruff |
| 3 | 100-6131 | 1 | Seal Kit |
| 3:1 | | 1 | Ring-Back Up ● |
| 3:2 | | 1 | Washer-Back Up ● |
| 3:3 | | 1 | Seal-Shaft ● |
| 3:4 | | 5 | Seal-Ring ● |
| 3:5 | | 1 | Seal-Commutator ● |
| 3:6 | | 1 | Seal-Dirt And Water ● |

● Not serviced separately

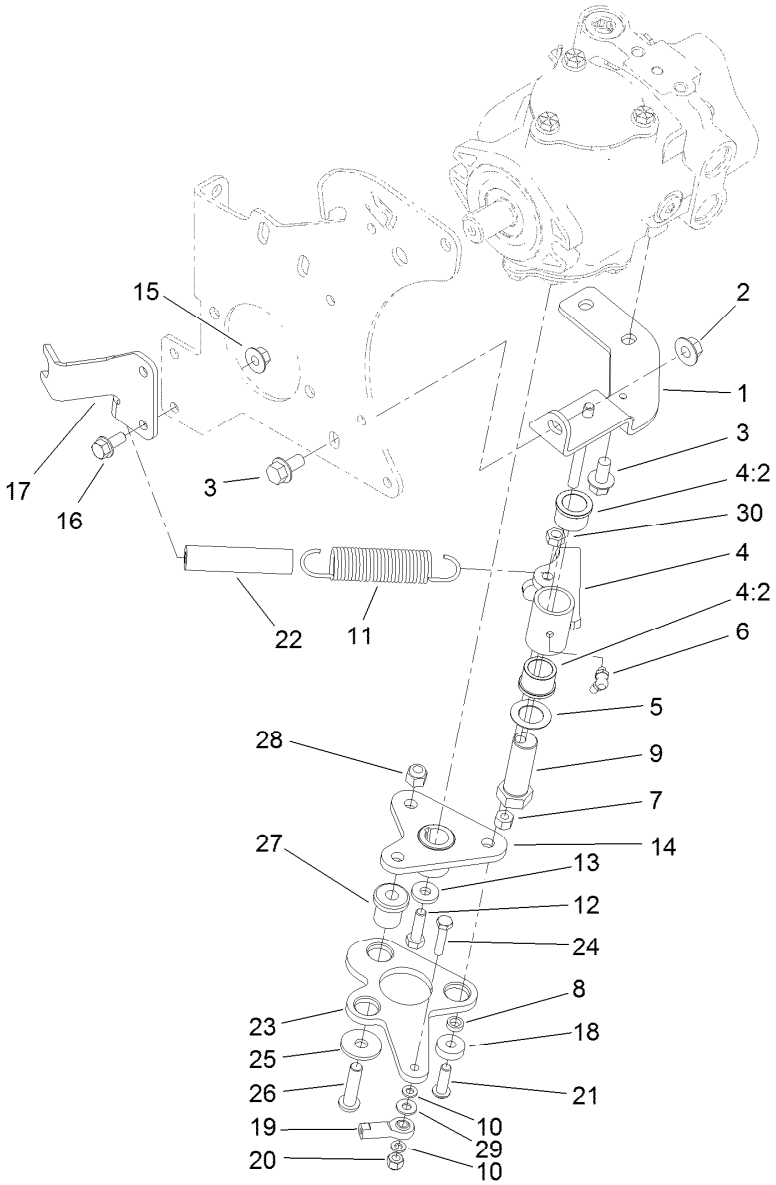


# Neutral Arm Assembly

| Ref. | Part Number | Qty. | Description |
|---|---|---|---|
| 1 | 95-8960-0P | 1 | Bracket-Neutral |
| 2 | 32128-43 | 1 | Nut-Flange |
| 3 | 3234-1 | 3 | Screw-HHF |
| 4 | 104-0422 | 1 | Neutral Arm ASM |
| 4:2 | 256-113 | 2 | Bushing-Flange |
| 5 | 3-6498 | 1 | Washer-Thrust |
| 6 | 302-60 | 1 | Fitting-Grease |
| 7 | 3296-29 | 1 | Nut-Lock, NI |
| 8 | 100-4817 | 1 | Spacer |
| 9 | 76-8640 | 1 | Stud-Traction |
| 10 | 33093-00 | 2 | Washer-Flat |
| 11 | 94-1369 | 1 | Spring-Extension |
| 12 | 3210-6 | 1 | Screw-HH |
| 13 | 88-7200 | 1 | Washer-Flat |
| 14 | 120-5566 | 1 | Hub |
| 15 | 32128-44 | 2 | Nut |

| Ref. | Part Number | Qty. | Description |
|---|---|---|---|
| 16 | 3234-5 | 2 | Screw-HHF |
| 17 | 104-0464-03 | 1 | Bracket-Support, Cable |
| 18 | 251-259 | 1 | Bearing-Ball |
| 19 | 2411-41 | 1 | Rod End-Ball Joint |
| 20 | 3296-42 | 1 | Nut-Lock, NI |
| 21 | 3274-104 | 1 | Screw-HSBH |
| 22 | 99-3556 | 1 | Hose |
| 23 | 99-3594-0P | 1 | Lever-Pump |
| 24 | 321-8 | 1 | Screw-HH |
| 25 | 2844 | 3 | Washer |
| 26 | 95-3857 | 3 | Screw-HSBH |
| 27 | 63-9750 | 3 | Mount |
| 28 | 3296-39 | 3 | Nut-Lock, NI |
| 29 | 3256-22 | 1 | Washer-Flat |
| 30 | 32153-3 | 1 | Nut-Hex, Side Deform |

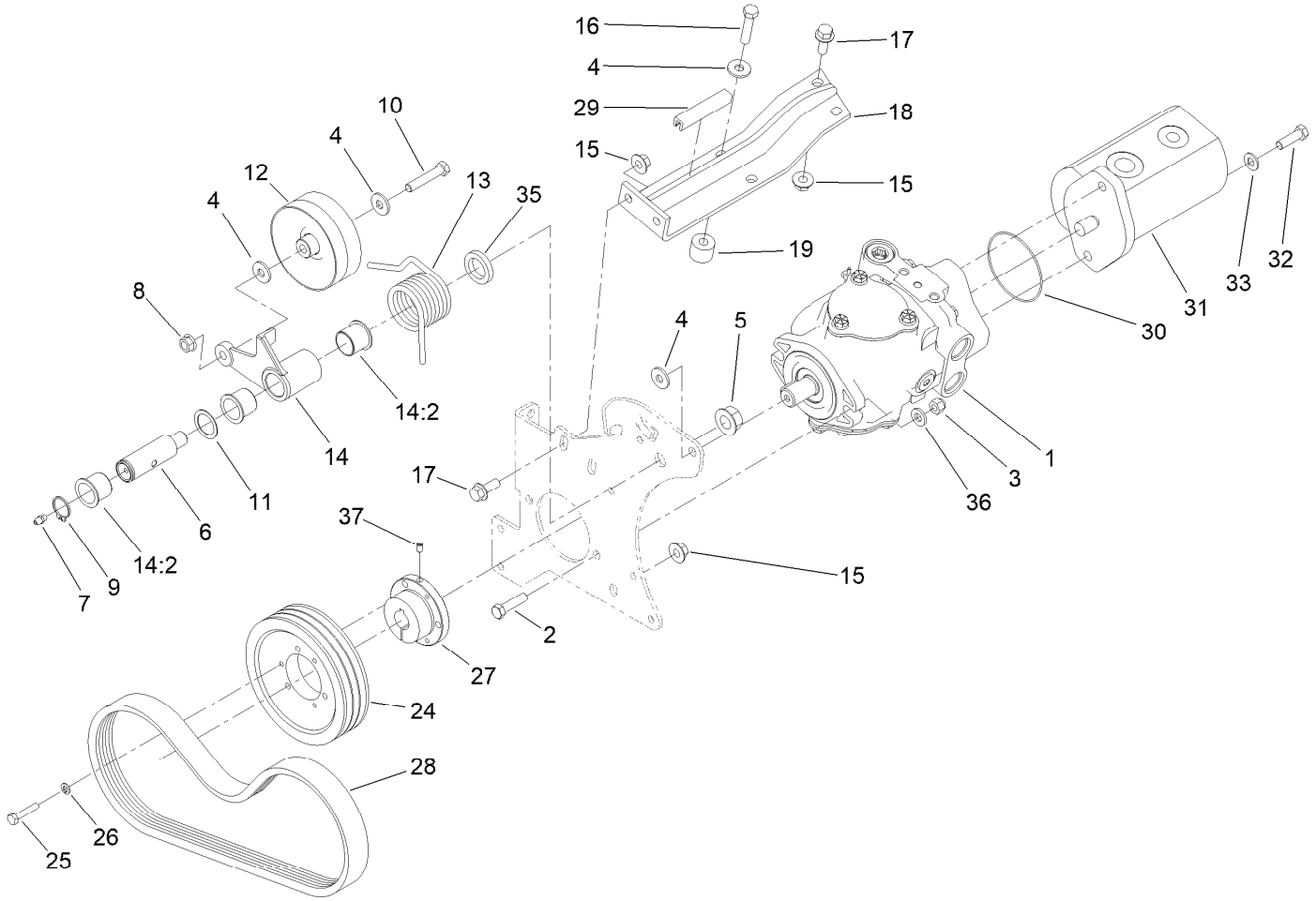


# Gear Pump and Piston Pump Assembly

| Ref. | Part Number | Qty. | Description |
|---|---|---|---|
| 1 | 104-4890 | 1 | Piston Pump ASM |
| 2 | 323-8 | 2 | Screw-HH |
| 3 | 3296-39 | 2 | Nut-Lock, NI |
| 4 | 80-6990 | 4 | Washer-Hardened |
| 5 | 32128-54 | 1 | Nut-HF |
| 6 | 99-3624 | 1 | Shaft-Pivot, Idler |
| 7 | 302-5 | 1 | Fitting-Grease |
| 8 | 32128-21 | 1 | Nut-HF Lock |
| 9 | 32151-36 | 1 | Ring-Retaining |
| 10 | 323-10 | 1 | Screw-HH |
| 11 | 74-1810 | 1 | Washer |
| 12 | 139-6031 | 1 | Pulley-Idler |
| 13 | 115-3488 | 1 | Spring-Torsion |
| 14 | 137-1653 | 1 | Idler Arm ASM |
| 14:2 | 126-1963 | 2 | Bushing-Pivot |
| 15 | 32128-43 | 4 | Nut-Flange |
| 16 | 323-19 | 2 | Screw-HH |

| Ref. | Part Number | Qty. | Description |
|---|---|---|---|
| 17 | 3234-11 | 4 | Screw-HHF |
| 18 | 99-3436-0P | 1 | Support-Pump |
| 19 | 99-3440 | 2 | Spacer |
| 24 | 120-3350 | 1 | Pulley-3V |
| 25 | 321-13 | 3 | Screw-HH |
| 26 | 3253-3 | 3 | Washer-Lock |
| 27 | 100-4813 | 1 | Bushing-Lock, Taper |
| 28 | 120-3351 | 1 | Belt-3V |
| 29 | 70-2041 | 1 | Trim - Edge |
| 30 | 353-949 | 1 | O-Ring |
| 31 | 108-9036 | 1 | HYD Gear Pump ASM |
| 32 | 323-7 | 2 | Screw-HH |
| 33 | 3256-24 | 2 | Washer-Plain |
| 35 | 99-3625 | 1 | Spacer-Arm, Idler |
| 36 | 100-4852 | 2 | Washer-Hardened |
| 37 | 3245-7 | 1 | Screw-Set |

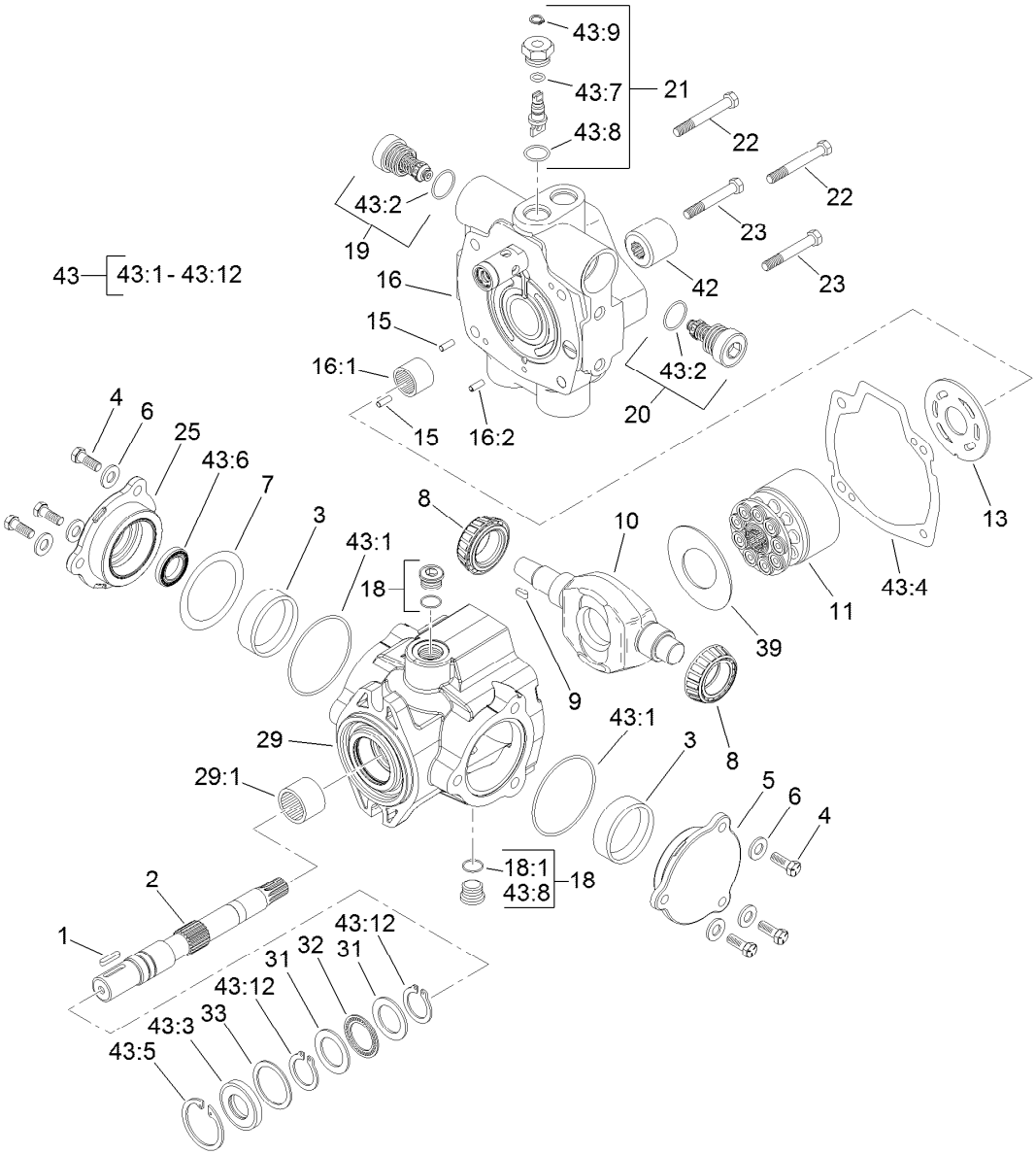


# Hydraulic Pump Assembly No. 104-4890

| Ref. | Part Number | Qty. | Description |
|---|---|---|---|
| 1 | 94-3645 | 1 | Key |
| 2 | 94-6359 | 1 | Shaft-Drive |
| 3 | 104-4046 | 2 | Bearing-Cup |
| 4 | 98-4640 | 6 | Screw-Cap |
| 5 | 98-4644 | 1 | Plate-Cover |
| 6 | 105-9762 | 6 | Washer |
| 7 | 100-3182 | 2 | Shim Kit |
| 8 | 98-4639 | 2 | Bearing-Cone |
| 9 | 94-3646 | 1 | Key |
| 10 | 104-4888 | 1 | Swashplate |
| 11 | 76-6070 | 1 | Rotating Kit |
| 13 | 104-0429 | 1 | Plate-Valve |
| 15 | 76-6150 | 2 | Pin-Dowel |
| 16 | 105-3813 | 1 | Endcover Sub ASM |
| 16:1 | 94-6368 | 1 | Bearing |
| 16:2 | | 1 | Pin-Roll ■ |
| 18 | 74-9280 | 2 | Plug ASM |
| 18:1 | | 1 | O-Ring ■ |

| Ref. | Part Number | Qty. | Description |
|---|---|---|---|
| 19 | 104-4889 | 1 | Relief Valve ASM |
| 20 | 105-3812 | 1 | Valve-Check |
| 21 | 105-3811 | 1 | Valve-Bypass |
| 22 | 76-6170 | 2 | Capscrew |
| 23 | 76-6160 | 2 | Capscrew |
| 25 | 98-4645 | 1 | Plate-Cover |
| 29 | 100-3176 | 1 | Housing ASM |
| 29:1 | 94-6363 | 1 | Bearing |
| 31 | 252-71 | 2 | Washer-Thrust |
| 32 | 252-66 | 1 | Bearing-Thrust |
| 33 | 33-3720 | 1 | Washer |
| 39 | 98-4635 | 1 | Insert-Plate, Cam |
| 42 | 74-9040 | 1 | Coupler |
| 43 | 120-5754 | 1 | Seal Kit |
| 43:1 | | 2 | O-Ring ■ |
| 43:2 | | 2 | O-Ring ■ |
| 43:3 | | 1 | Seal-Shaft ■ |
| 43:4 | | 1 | Gasket ■ |

● Not illustrated

■ Not serviced separately

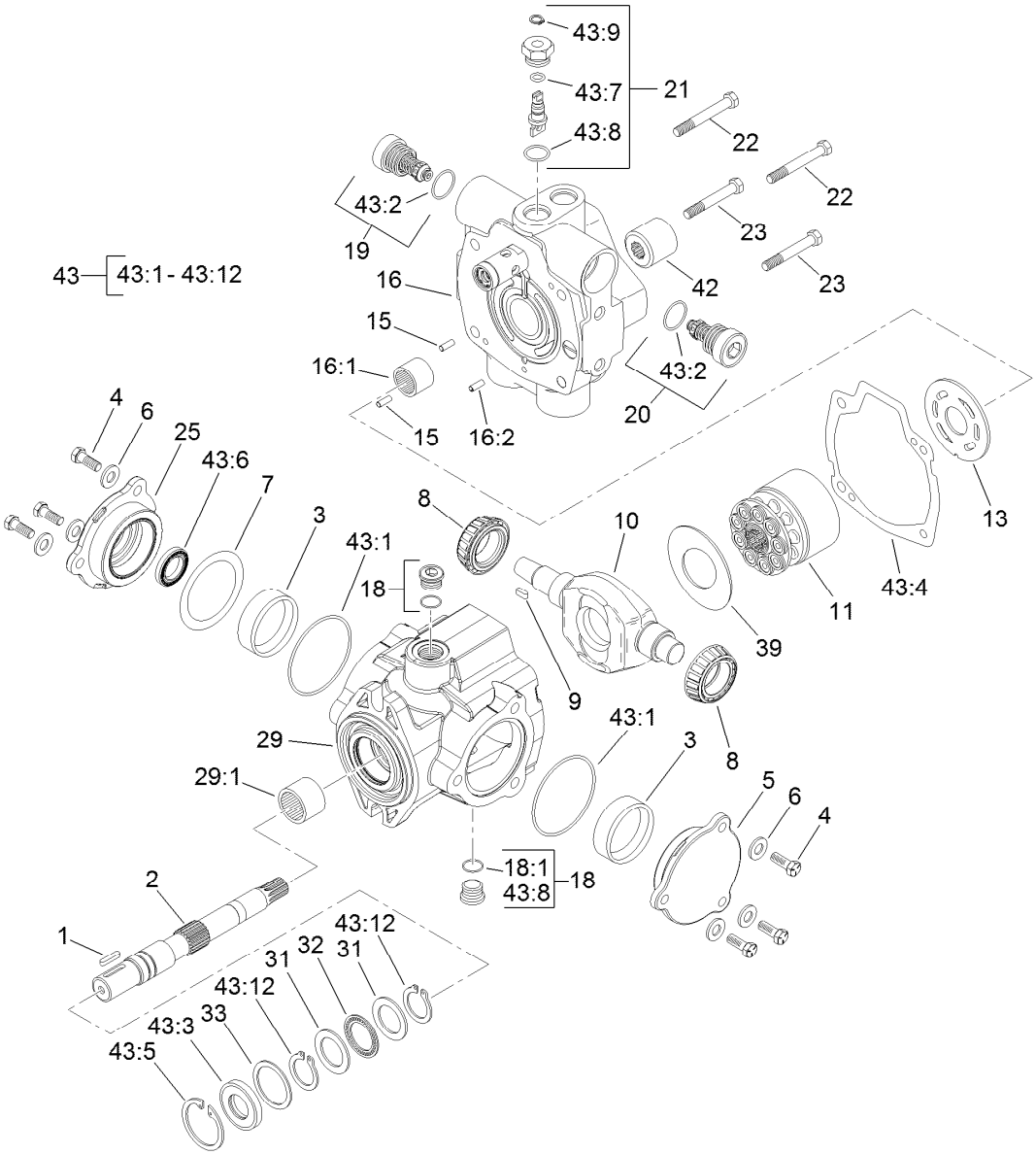


# Hydraulic Pump Assembly No. 104-4890 (continued)

| Ref. | Part Number | Qty. | Description |
|---|---|---|---|
| 43:5 | | 1 | Ring-Retaining ■ |
| 43:6 | | 1 | Seal-Shaft ■ |
| 43:7 | | 1 | O-Ring ■ |
| 43:8 | | 5 | O-Ring ■ |
| 43:9 | | 1 | Ring-Retaining ■ |

| Ref. | Part Number | Qty. | Description |
|---|---|---|---|
| 43:10 | | 1 | O-Ring ● ■ |
| 43:11 | | 1 | O Ring-Molded ● ■ |
| 43:12 | | 2 | Ring-Retaining ■ |
| 43:13 | | 1 | O-Ring ■ ● |

● Not illustrated

■ Not serviced separately

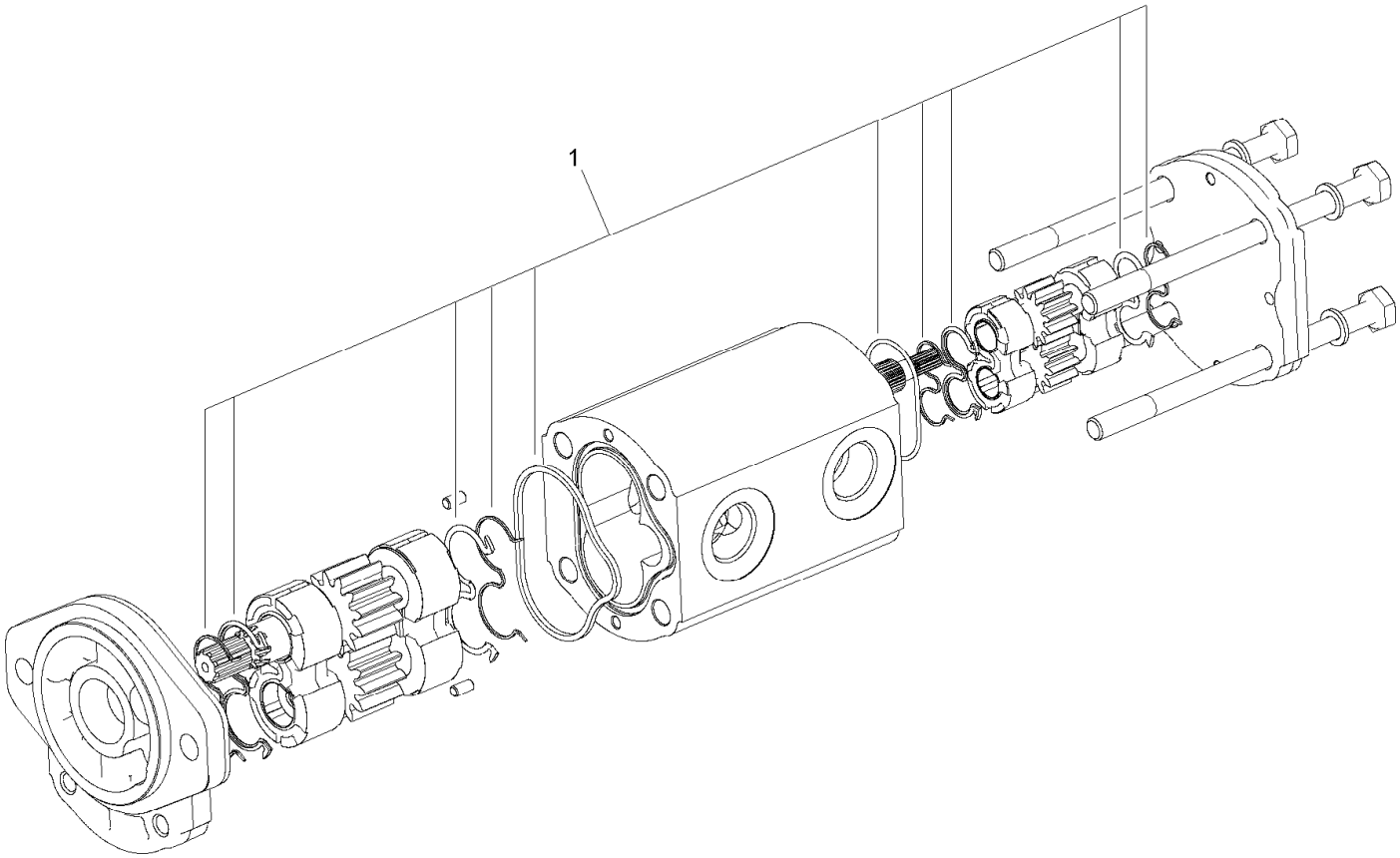


# Hydraulic Gear Pump Assembly No. 108-9036

| *Ref.* | *Part Number* | *Qty.* | *Description* |
|---|---|---|---|
| 1 | 110-8755 | 1 | Seal Kit |

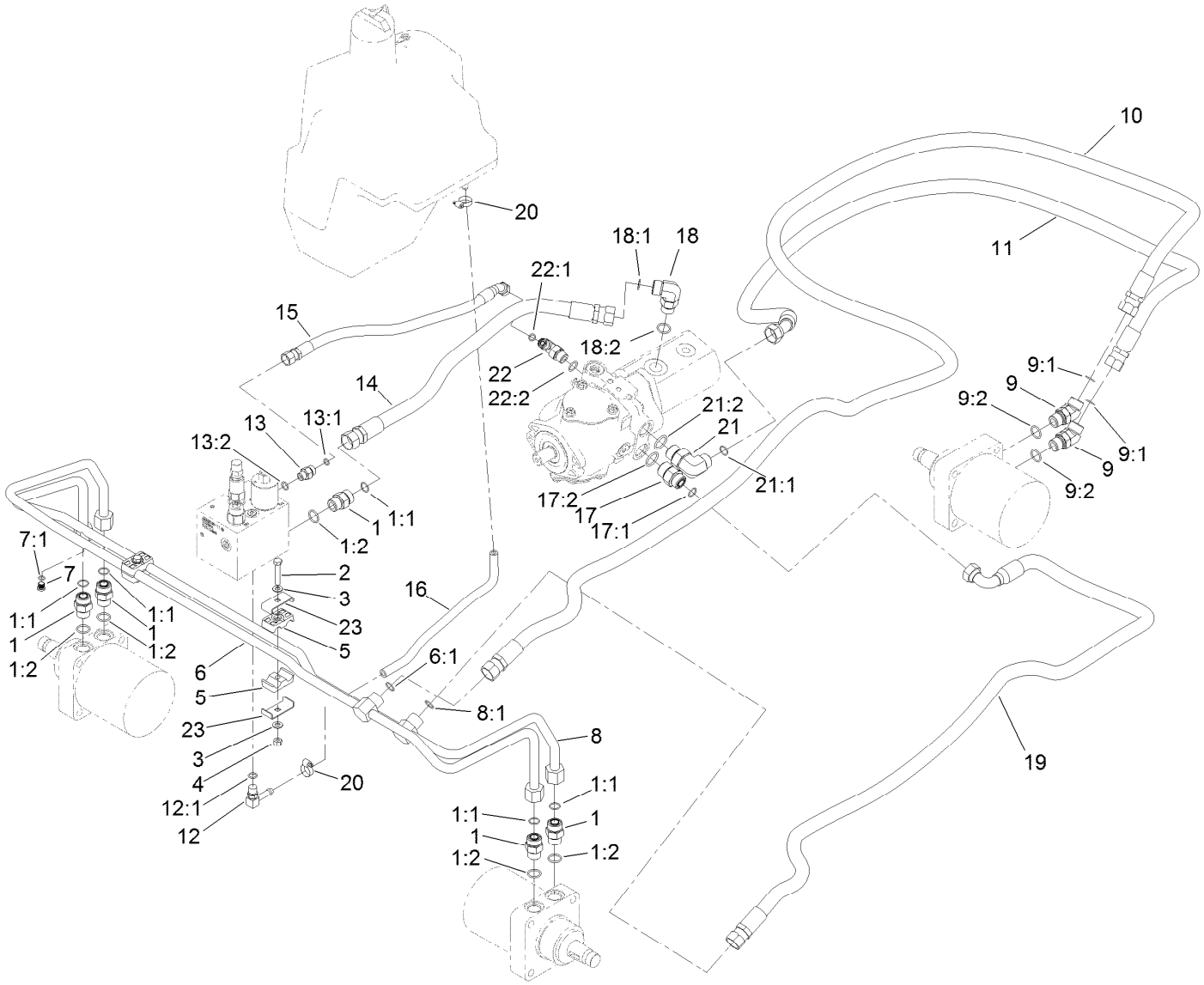


# Traction Hydraulic Assembly

| Ref. | Part Number | Qty. | Description |
|---|---|---|---|
| 1 | 340-7 | 5 | Fitting-Straight |
| 1:1 | 237-65 | 1 | O-Ring |
| 1:2 | 237-80 | 1 | O-Ring |
| 2 | 322-9 | 2 | Screw-HH |
| 3 | 3256-23 | 4 | Washer-Plain |
| 4 | 3296-29 | 2 | Nut-Lock, NI |
| 5 | 56-7971 | 4 | Clamp-Tube |
| 6 | 95-8783 | 1 | Tube ASM |
| 6:1 | 237-65 | 1 | O-Ring |
| 7 | 353-990 | 1 | Plug ASM |
| 7:1 | 237-78 | 1 | O-Ring |
| 8 | 95-8784 | 1 | Tube ASM |
| 8:1 | 237-65 | 1 | O-Ring |
| 9 | 340-14 | 2 | Fitting-HYD, 45 DEG |
| 9:1 | 237-65 | 1 | O-Ring |
| 9:2 | 237-80 | 1 | O-Ring |
| 10 | 105-1213 | 1 | Hose-HYD |
| 11 | 105-1212 | 1 | Hose-HYD |
| 12 | 100-4887 | 1 | Fitting-Elbow, 90 |
| 12:1 | 237-42 | 1 | O-Ring |
| 13 | 340-2 | 1 | Fitting-Straight |

| Ref. | Part Number | Qty. | Description |
|---|---|---|---|
| 13:1 | 237-22 | 1 | O-Ring |
| 13:2 | 237-42 | 1 | O-Ring |
| 14 | 104-0488 | 1 | Hose-HYD |
| 15 | 92-7595 | 1 | Hose-HYD |
| 16 | 80-7342 | 1 | Hose-HYD |
| 17 | 340-8 | 1 | Fitting-Straight |
| 17:1 | 237-65 | 1 | O-Ring |
| 17:2 | 237-81 | 1 | O-Ring |
| 18 | 340-17 | 1 | Fitting-Elbow, 90 DEG |
| 18:1 | 237-65 | 1 | O-Ring |
| 18:2 | 237-80 | 1 | O-Ring |
| 19 | 105-1214 | 1 | Hose-HYD |
| 20 | 2412-36 | 1 | Clamp-Hose |
| 21 | 340-139 | 1 | Fitting-Elbow 90 |
| 21:1 | 237-81 | 1 | O-Ring |
| 21:2 | 237-65 | 1 | O-Ring |
| 22 | 340-18 | 1 | Fitting-HYD, 90 DEG |
| 22:1 | 237-79 | 1 | O-Ring |
| 22:2 | 237-22 | 1 | O-Ring |
| 23 | 119-1419 | 4 | Plate-Clamp |

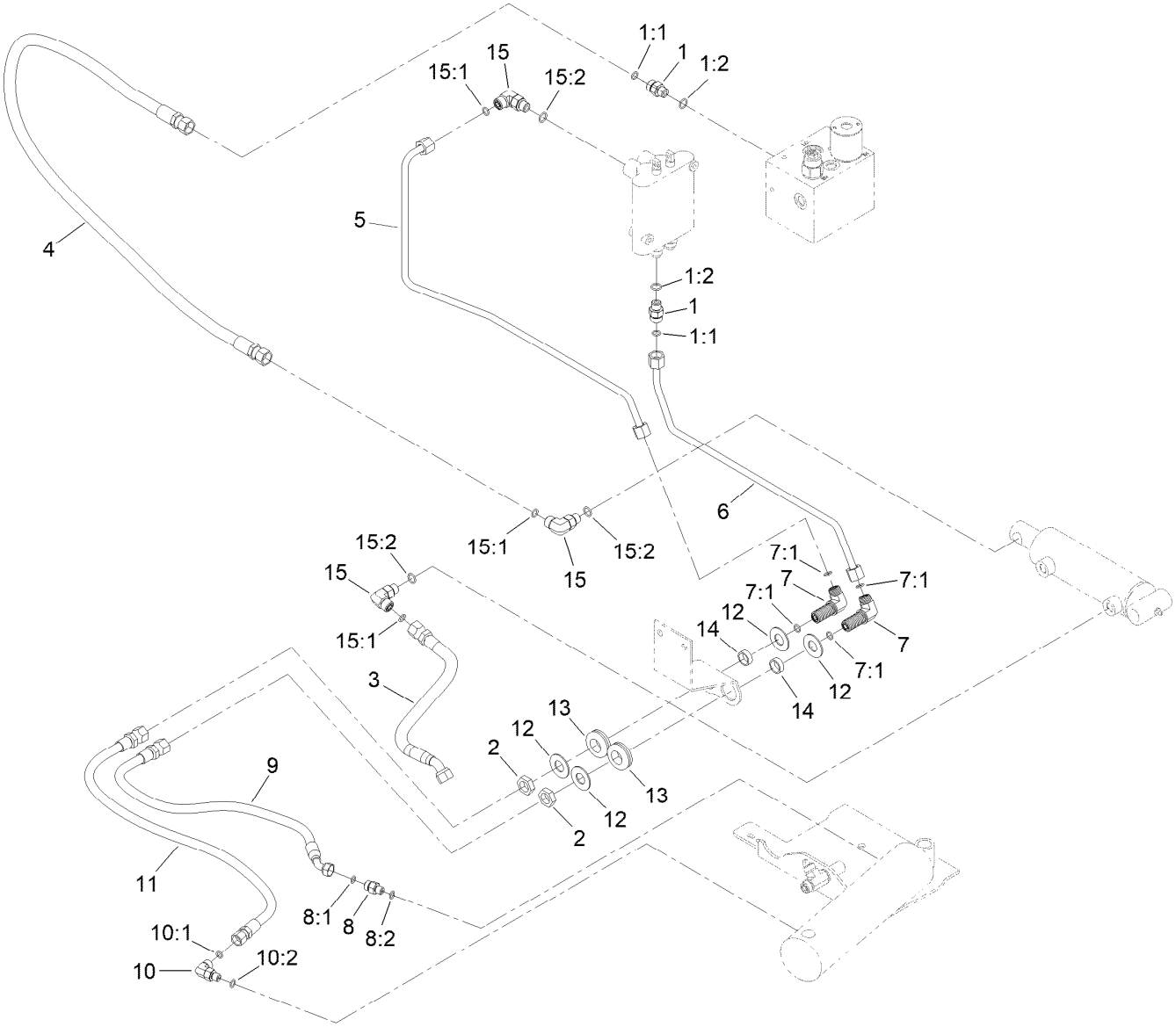


# Lift Hydraulic Assembly

| Ref. | Part Number | Qty. | Description |
|---|---|---|---|
| 1 | 340-2 | 2 | Fitting-Straight |
| 1:1 | 237-22 | 1 | O-Ring |
| 1:2 | 237-42 | 1 | O-Ring |
| 2 | 340-70 | 2 | Nut-Lock |
| 3 | 104-0407 | 1 | Hose-HYD |
| 4 | 100-4891 | 1 | Hose-HYD |
| 5 | 95-8790 | 1 | Tube-HYD |
| 6 | 95-8791 | 1 | Tube-HYD |
| 7 | 340-154 | 2 | Union-Bulkhead |
| 7:1 | 237-22 | 2 | O-Ring |
| 8 | 85-9720 | 1 | Fitting-STR, Orifice |
| 8:1 | 237-78 | 1 | O-Ring |

| Ref. | Part Number | Qty. | Description |
|---|---|---|---|
| 8:2 | 237-21 | 1 | O-Ring |
| 9 | 95-8838 | 1 | Hose-HYD |
| 10 | 340-132 | 1 | Fitting-Elbow, 90 DEG |
| 10:1 | 237-78 | 1 | O-Ring |
| 10:2 | 237-21 | 1 | O-Ring |
| 11 | 95-8839 | 1 | Hose-HYD |
| 12 | 69-8940 | 4 | Washer |
| 13 | 240-4 | 2 | Grommet-Rubber |
| 14 | 69-8970 | 2 | Spacer |
| 15 | 340-77 | 3 | Fitting-Elbow, 90 DEG |
| 15:1 | 237-22 | 1 | O-Ring |
| 15:2 | 237-42 | 1 | O-Ring |

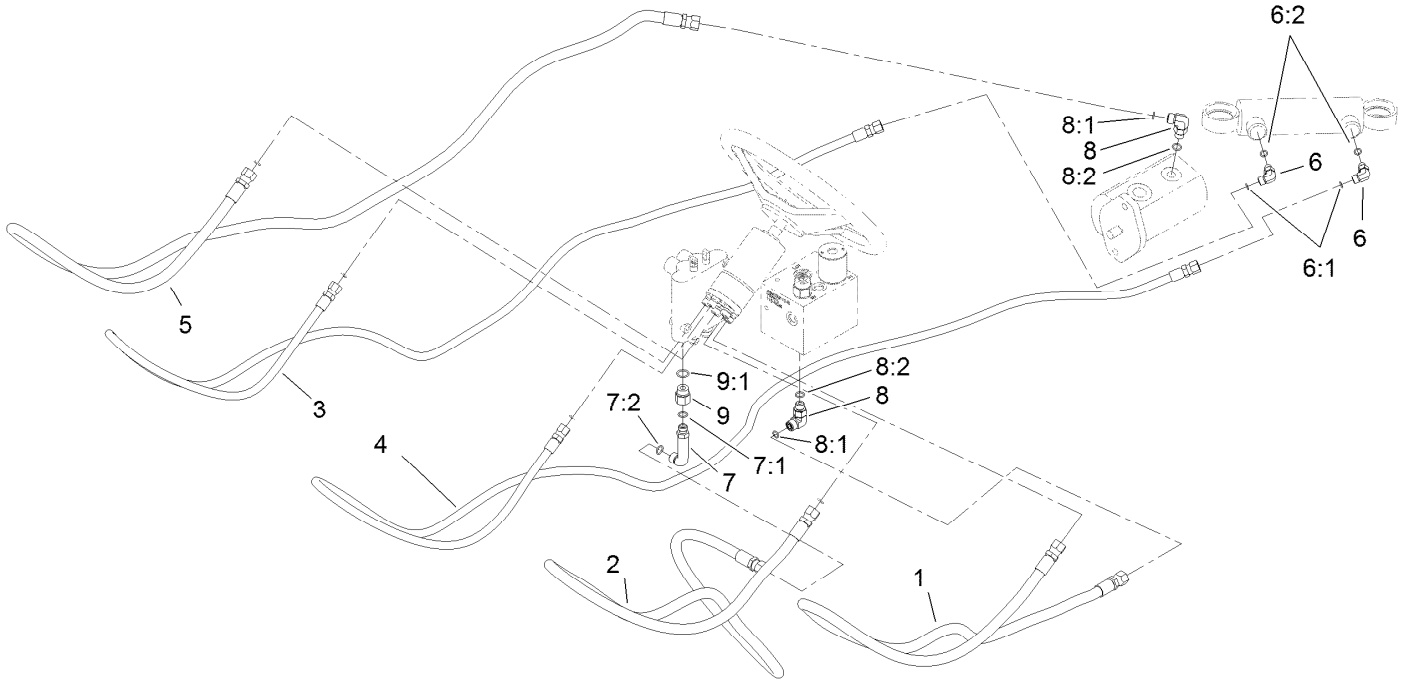


# Steering Hydraulic Assembly

| Ref. | Part Number | Qty. | Description |
|---|---|---|---|
| 1 | 95-8842 | 1 | Hose-HYD |
| 2 | 95-8843 | 1 | Hose-HYD |
| 3 | 100-4892 | 1 | Hose-HYD |
| 4 | 100-4893 | 1 | Hose-HYD |
| 5 | 95-8846 | 1 | Hose-HYD |
| 6 | 340-132 | 2 | Fitting-Elbow, 90 DEG |
| 6:1 | 237-78 | 1 | O-Ring |
| 6:2 | 237-21 | 1 | O-Ring |

| Ref. | Part Number | Qty. | Description |
|---|---|---|---|
| 7 | 69-4320 | 1 | Fitting-HYD, 90 DEG |
| 7:1 | 237-22 | 1 | O-Ring |
| 7:2 | 237-42 | 1 | O-Ring |
| 8 | 340-77 | 2 | Fitting-Elbow, 90 DEG |
| 8:1 | 237-22 | 1 | O-Ring |
| 8:2 | 237-42 | 1 | O-Ring |
| 9 | 353-397 | 1 | Reducer-Adapter |
| 9:1 | 237-79 | 1 | O-Ring |

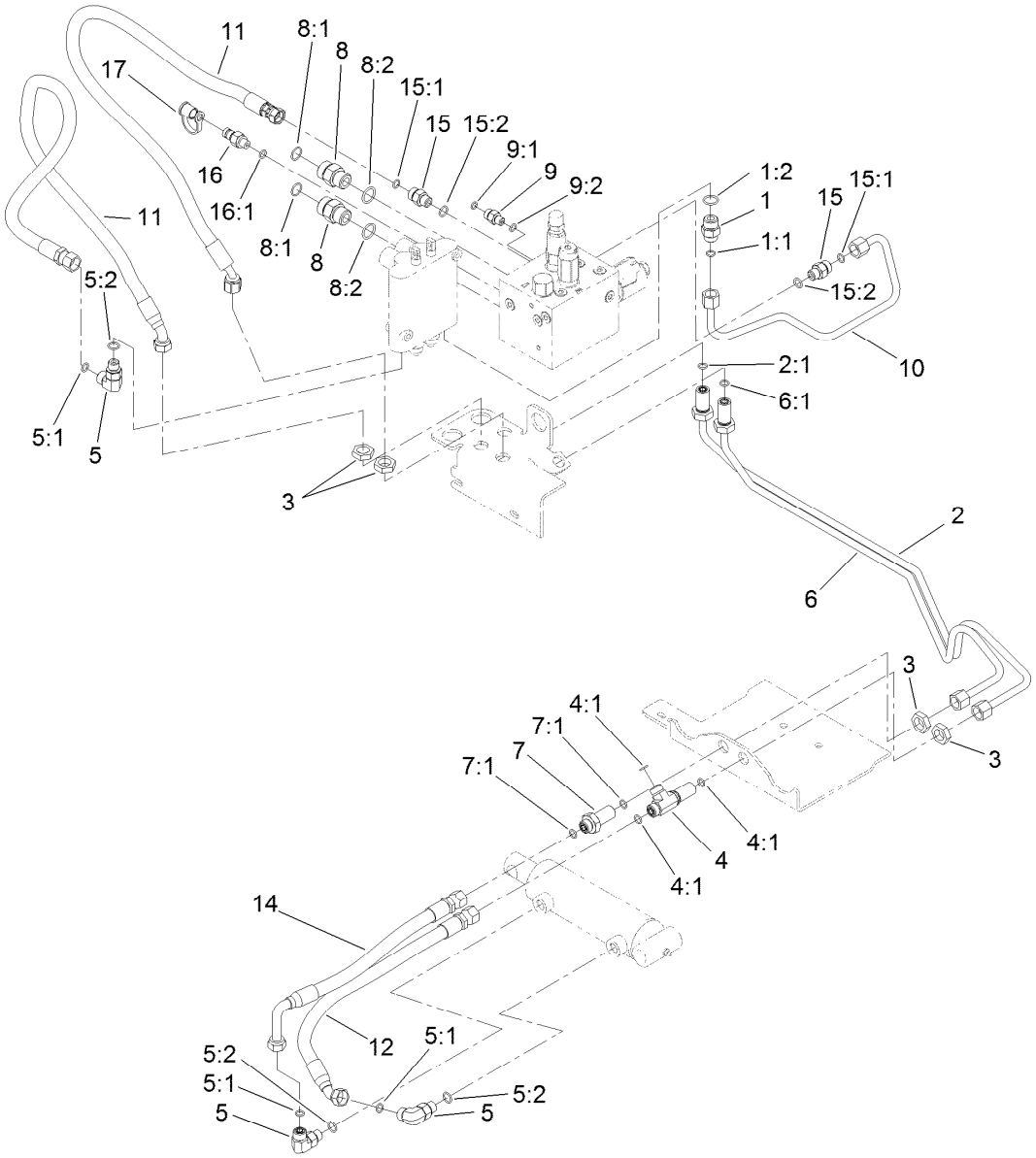


# Sidewinder Hydraulic Assembly

| Ref. | Part Number | Qty. | Description |
|---|---|---|---|
| 1 | 340-3 | 1 | Fitting-Straight |
| 1:1 | 237-22 | 1 | O-Ring |
| 1:2 | 237-79 | 1 | O-Ring |
| 2 | 104-0402 | 1 | Tube-HYD |
| 2:1 | 237-22 | 1 | O-Ring |
| 3 | 340-70 | 4 | Nut-Lock |
| 4 | 340-68 | 1 | Fitting-Tee, Bulkhead |
| 4:1 | 237-22 | 3 | O-Ring |
| 5 | 340-77 | 3 | Fitting-Elbow, 90 DEG |
| 5:1 | 237-22 | 1 | O-Ring |
| 5:2 | 237-42 | 1 | O-Ring |
| 6 | 104-0403 | 1 | Tube ASM |
| 6:1 | 237-22 | 1 | O-Ring |
| 7 | 340-71 | 1 | Fitting-Straight, Bulkhead |
| 7:1 | 237-22 | 2 | O-Ring |
| 8 | 340-7 | 2 | Fitting-Straight |

| Ref. | Part Number | Qty. | Description |
|---|---|---|---|
| 8:1 | 237-65 | 1 | O-Ring |
| 8:2 | 237-80 | 1 | O-Ring |
| 9 | 340-92 | 1 | Fitting-Straight |
| 9:1 | 237-78 | 1 | O-Ring |
| 9:2 | 237-21 | 1 | O-Ring |
| 10 | 100-4827 | 1 | Tube-HYD |
| 11 | 95-8822 | 2 | Hose-HYD |
| 12 | 104-0405 | 1 | Hose-HYD |
| 14 | 104-0406 | 1 | Hose-HYD |
| 15 | 340-2 | 2 | Fitting-Straight |
| 15:1 | 237-22 | 1 | O-Ring |
| 15:2 | 237-42 | 1 | O-Ring |
| 16 | 354-77 | 1 | Fitting-Quick |
| 16:1 | 237-78 | 1 | O-Ring ● |
| 17 | 354-79 | 1 | Cap-Dust |

● Not illustrated

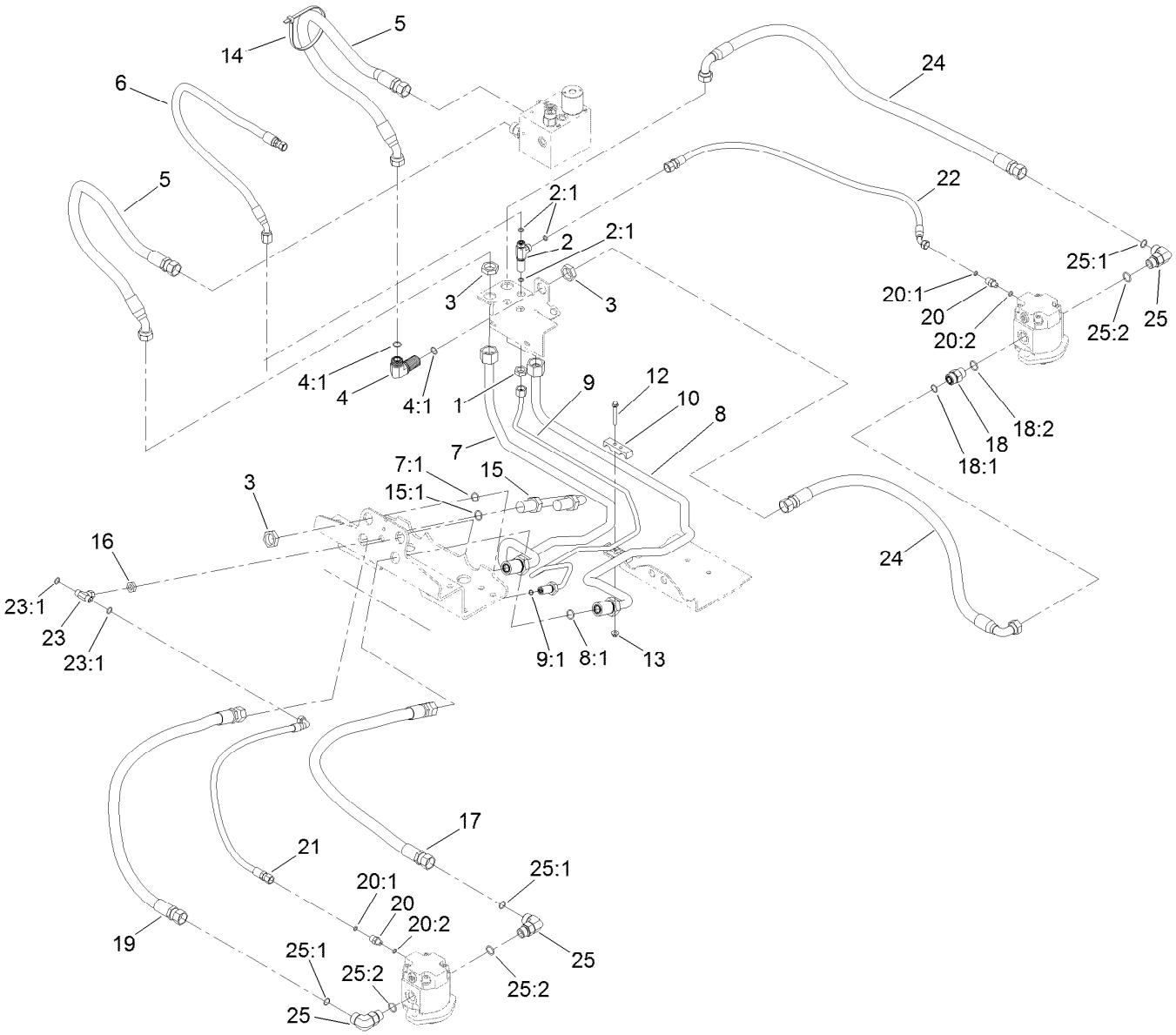


# Mow Hydraulic Assembly

| Ref. | Part Number | Qty. | Description |
|---|---|---|---|
| 1 | 340-70 | 1 | Nut-Lock |
| 2 | 340-68 | 1 | Fitting-Tee, Bulkhead |
| 2:1 | 237-22 | 3 | O-Ring |
| 3 | 340-74 | 7 | Nut-Lock, Bulkhead |
| 4 | 340-72 | 1 | Fitting-Bulkhead, 90 DEG |
| 4:1 | 237-65 | 2 | O-Ring |
| 5 | 100-4879 | 2 | Hose-HYD |
| 6 | 115-3411 | 1 | Hose-HYD |
| 7 | 104-0401 | 1 | Tube ASM |
| 7:1 | 237-65 | 2 | O-Ring |
| 8 | 104-0400 | 1 | Tube ASM |
| 8:1 | 237-65 | 2 | O-Ring |
| 9 | 104-0404 | 1 | Tube ASM |
| 9:1 | 237-21 | 1 | O-Ring |
| 10 | 99-3641 | 2 | Clamp-Tube |
| 12 | 3234-34 | 2 | Screw-HHF |
| 13 | 104-7201 | 2 | Nut-HF, NI |
| 14 | 3334-945 | 2 | Tie-Cable |
| 15 | 99-3640 | 1 | Tube ASM |

| Ref. | Part Number | Qty. | Description |
|---|---|---|---|
| 15:1 | 237-65 | 2 | O-Ring |
| 16 | 340-78 | 1 | Nut-Lock |
| 17 | 105-1216 | 2 | Hose-HYD |
| 18 | 340-7 | 1 | Fitting-Straight |
| 18:1 | 237-65 | 1 | O-Ring |
| 18:2 | 237-80 | 1 | O-Ring |
| 19 | 105-1215 | 2 | Hose-HYD |
| 20 | 340-92 | 3 | Fitting-Straight |
| 20:1 | 237-78 | 1 | O-Ring |
| 20:2 | 237-21 | 1 | O-Ring |
| 21 | 104-1080 | 2 | Hose-HYD |
| 22 | 100-4876 | 1 | Hose-HYD |
| 23 | 99-3477 | 1 | Fitting-Tee |
| 23:1 | 237-21 | 2 | O-Ring |
| 24 | 100-4880 | 2 | Hose-HYD |
| 25 | 340-17 | 5 | Fitting-Elbow, 90 DEG |
| 25:1 | 237-65 | 1 | O-Ring |
| 25:2 | 237-80 | 1 | O-Ring |

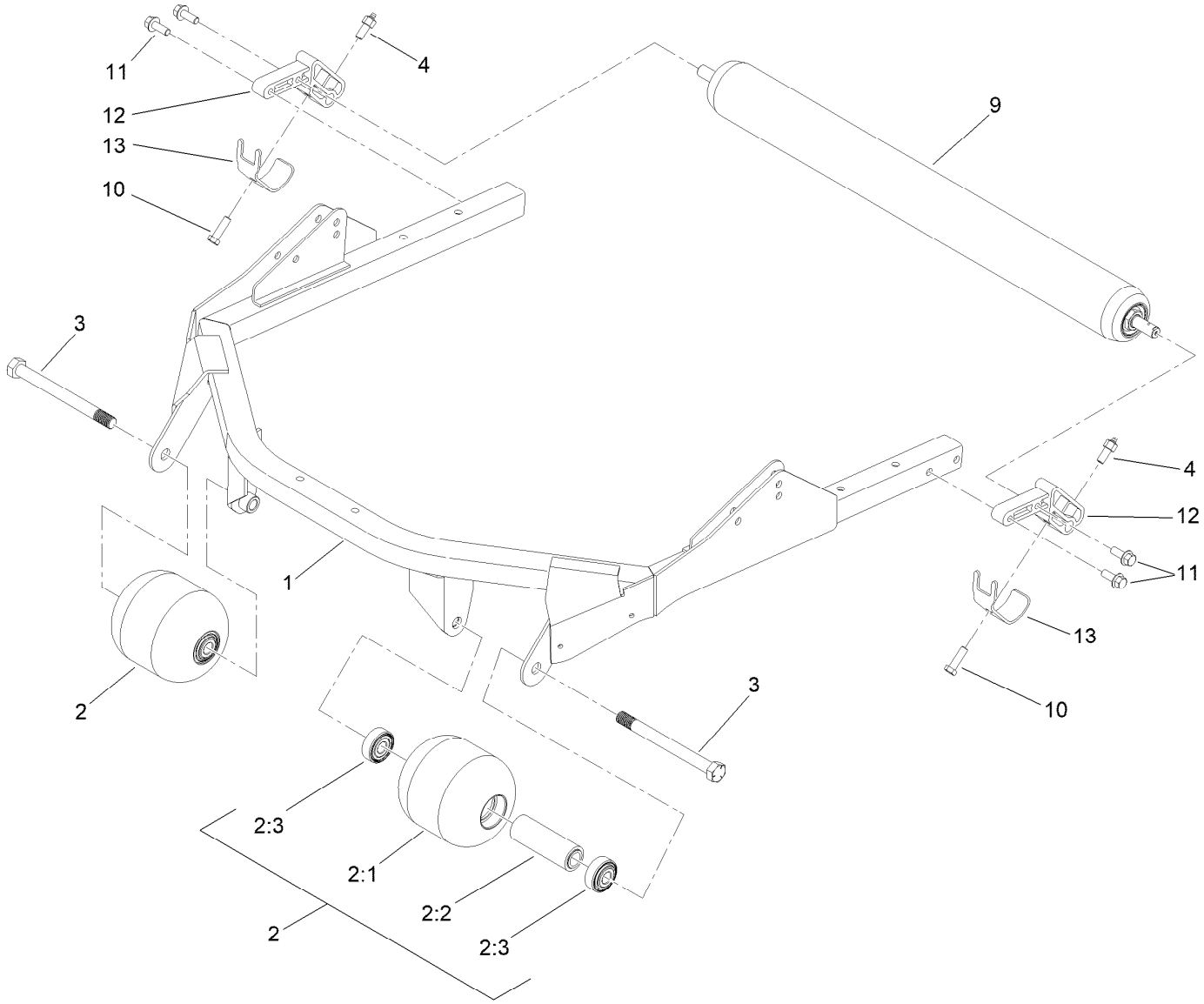


# Roller and Carrier Frame Assembly

| *Ref.* | *Part Number* | *Qty.* | *Description* |
|---|---|---|---|
| 1 | 100-5780-03 | 1 | Frame-Deck |
| 2 | 136-2908 | 2 | Roller ASM |
| 2:1 | 104-1093 | 1 | Roller |
| 2:2 | 100-5762 | 1 | Spacer-Bearing |
| 2:3 | 120-3366 | 2 | Bearing |
| 3 | 136-2924 | 2 | Screw-HH |
| 4 | 127-6422 | 2 | Screw-Grease, Roller |
| 9 | 137-6141 | 1 | Rear Roller ASM |
| 10 | 323-7 | 2 | Screw-HH |
| 11 | 3234-11 | 4 | Screw-HHF |
| 12 | 112-5268 | 2 | Mount-Roller |
| 13 | 107-7816 | 2 | Bracket-Skid |

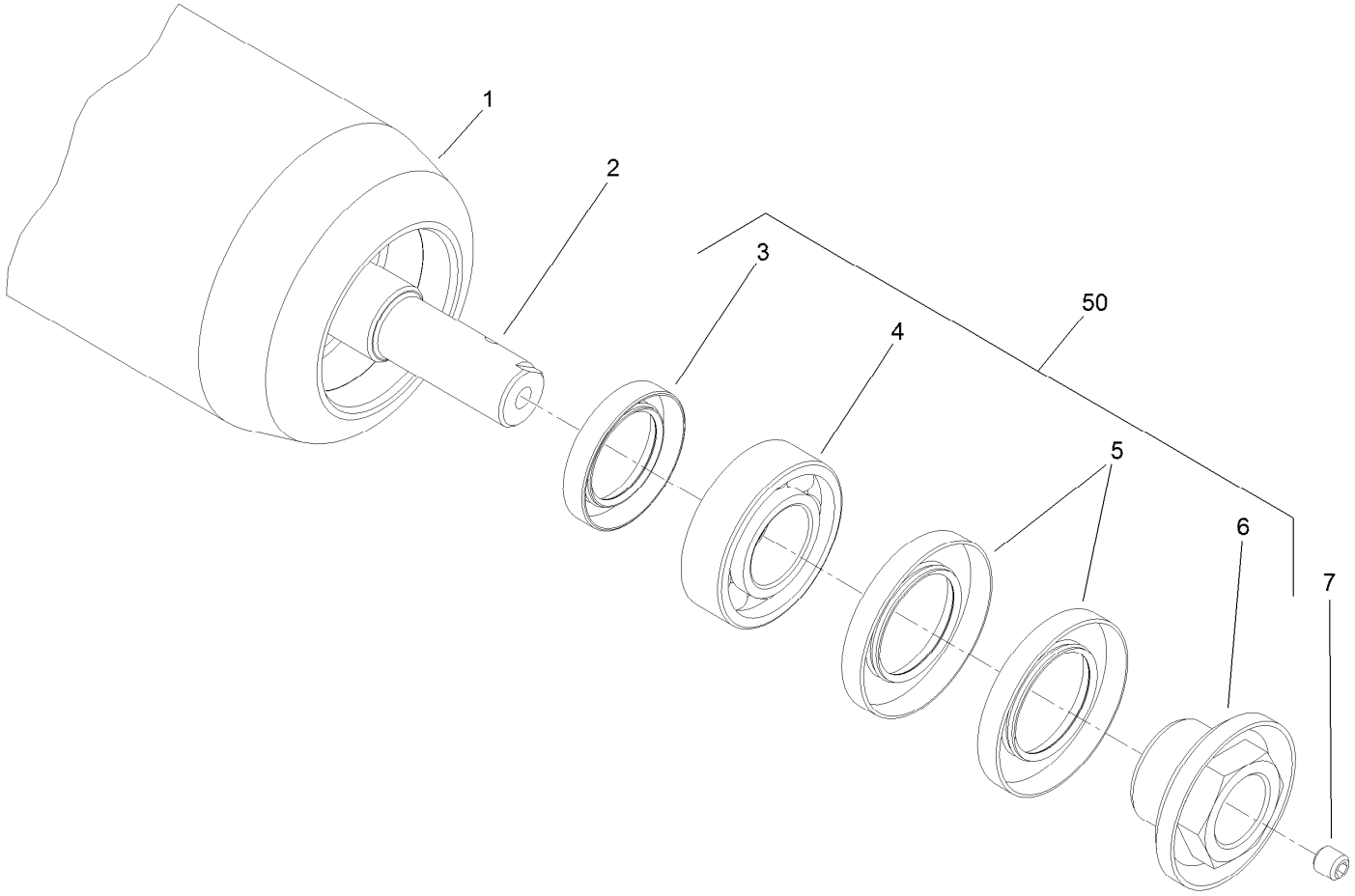


# Rear Roller Assembly No. 137-6141

| *Ref.* | *Part Number* | *Qty.* | *Description* |
|---|---|---|---|
| 1 | 137-6140 | 1 | Tube-Roller |
| 2 | 117-5100 | 1 | Shaft-Roller, Rear |
| 3 | 114-3717 | 2 | Seal-Oil |
| 4 | 112-5290 | 2 | Bearing-Steel, Stainless |
| 5 | 112-7494 | 4 | Seal |
| 6 | 114-5411 | 2 | Nut-Lock, Bearing |
| 7 | 108-0989 | 2 | Screw-Set |
| 50 | 114-5430 | 1 | Roller Rebuild Kit |

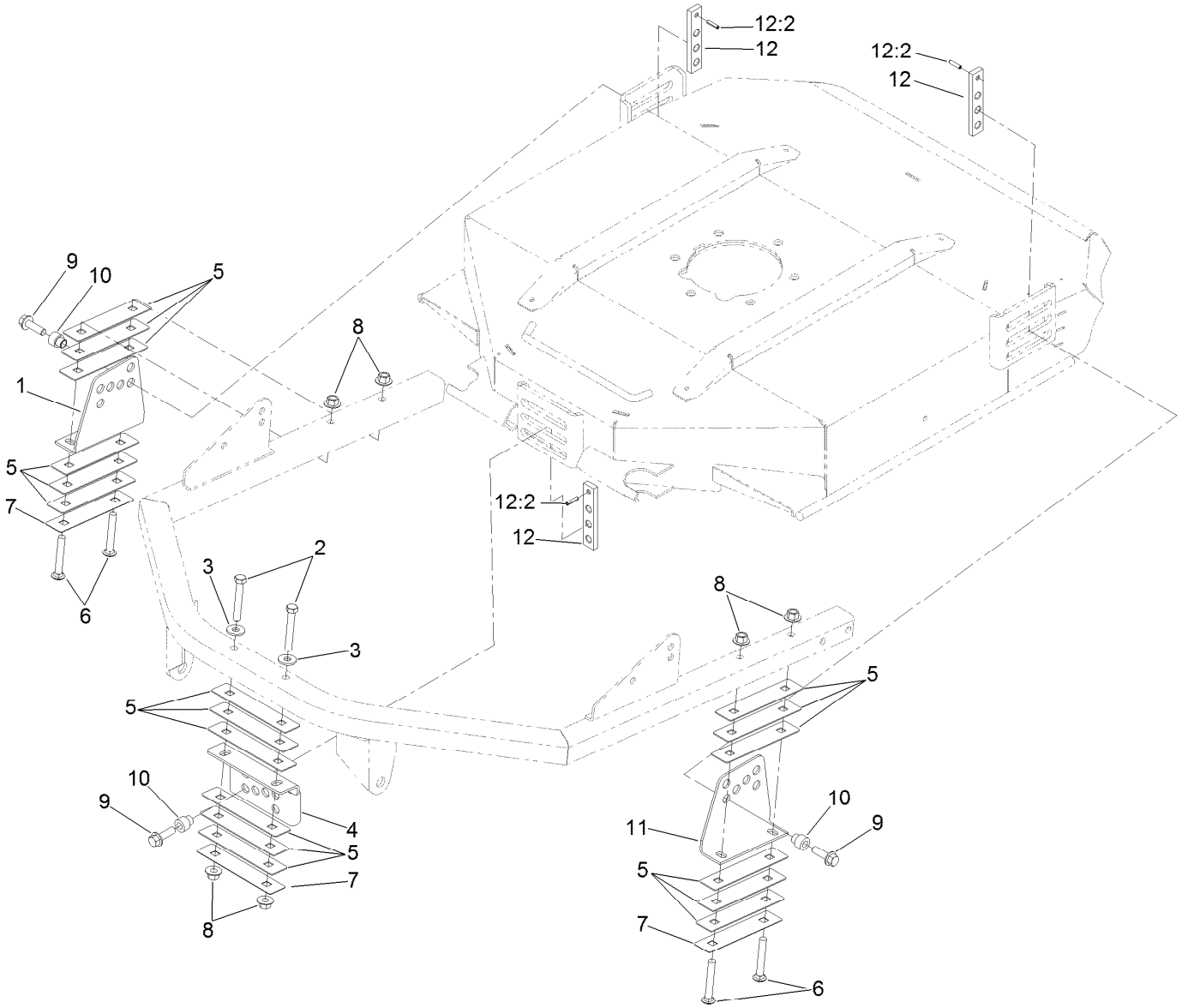


# Height-of-Cut Bracket Assembly

| Ref. | Part Number | Qty. | Description |
|---|---|---|---|
| 1 | 100-5797-03 | 1 | Bracket-HOC, RH |
| 2 | 323-12 | 2 | Screw-HH |
| 3 | 80-6990 | 2 | Washer-Hardened |
| 4 | 104-1052-03 | 1 | Bracket-HOC, Front |
| 5 | 100-5799 | 18 | Shim-HOC, .060 Inch |
| 6 | 3231-9 | 4 | Screw-CARR |
| 7 | 104-4641 | 3 | Shim-HOC, .030 Inch |
| 8 | 32128-43 | 6 | Nut-Flange |
| 9 | 3234-24 | 3 | Screw-HHF |
| 10 | 121-3575 | 3 | Spacer-HOC |
| 11 | 104-4624-03 | 1 | Bracket-HOC, LH |
| 12 | 136-2921 | 3 | HOC Plate ASM |
| 12:2 | 32121-5 | 1 | Pin-Spring |

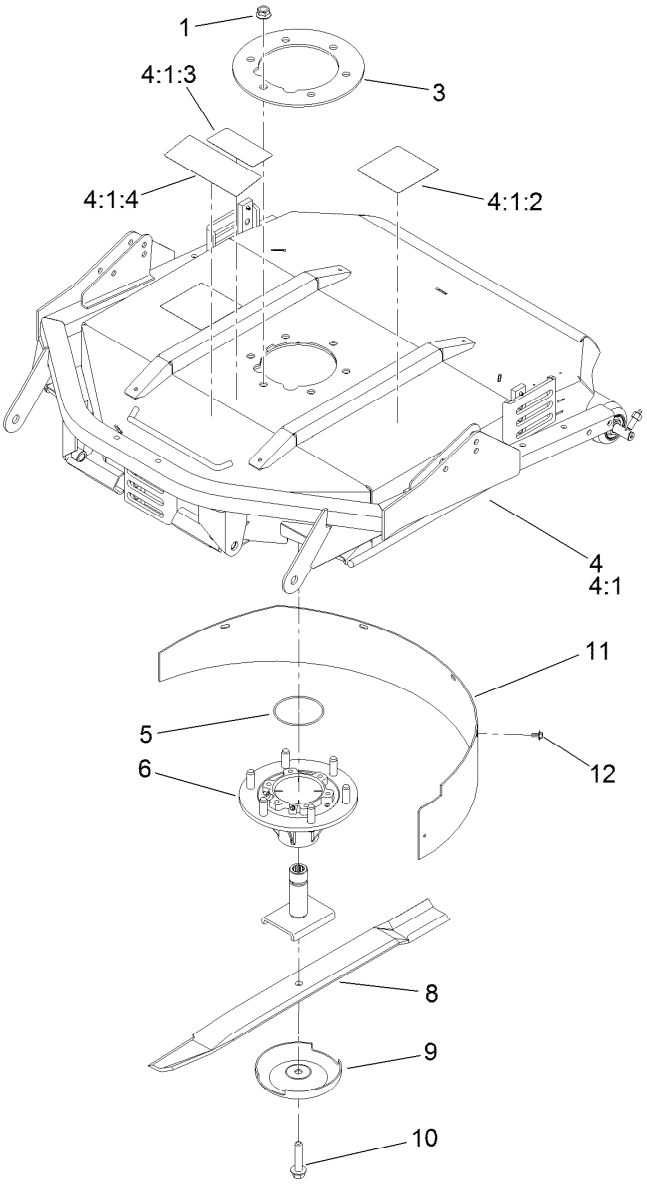


# Chamber, Blade and Spindle Assembly

| Ref. | Part Number | Qty. | Description |
|---|---|---|---|
| 1 | 32128-39 | 6 | Nut-HF |
| 3 | 104-1051-03 | 1 | Plate-Spindle |
| 4 | 127-6389 | 1 | Deck Chamber Service ASM |
| 4:1 | | 1 | Chamber ASM ● |
| 4:1:2 | 117-4764 | 2 | Decal-Danger |
| 4:1:3 | 93-7818 | 1 | Decal-Torque, Blade Bolt |
| 4:1:4 | 121-3627 | 1 | Decal-Height Of Cut |
| 5 | 237-161 | 1 | O-Ring |
| 6 | 121-3666 | 1 | Spindle ASM |
| 8 | 107-0235-03 | 1 | Blade-Atomic |
| 8 | 108-9026 | 1 | Blade-27", Combo |
| 9 | 72-9361 | 1 | Cup-Scalp, Anti |
| 10 | 92-5816 | 1 | Bolt-Blade |
| 11 | 108-9025-01 | 1 | Baffle-Mulching |
| 12 | 46-8560 | 5 | Screw-HHFTF |

● Not serviced separately

# Spindle Assembly No. 121-3666

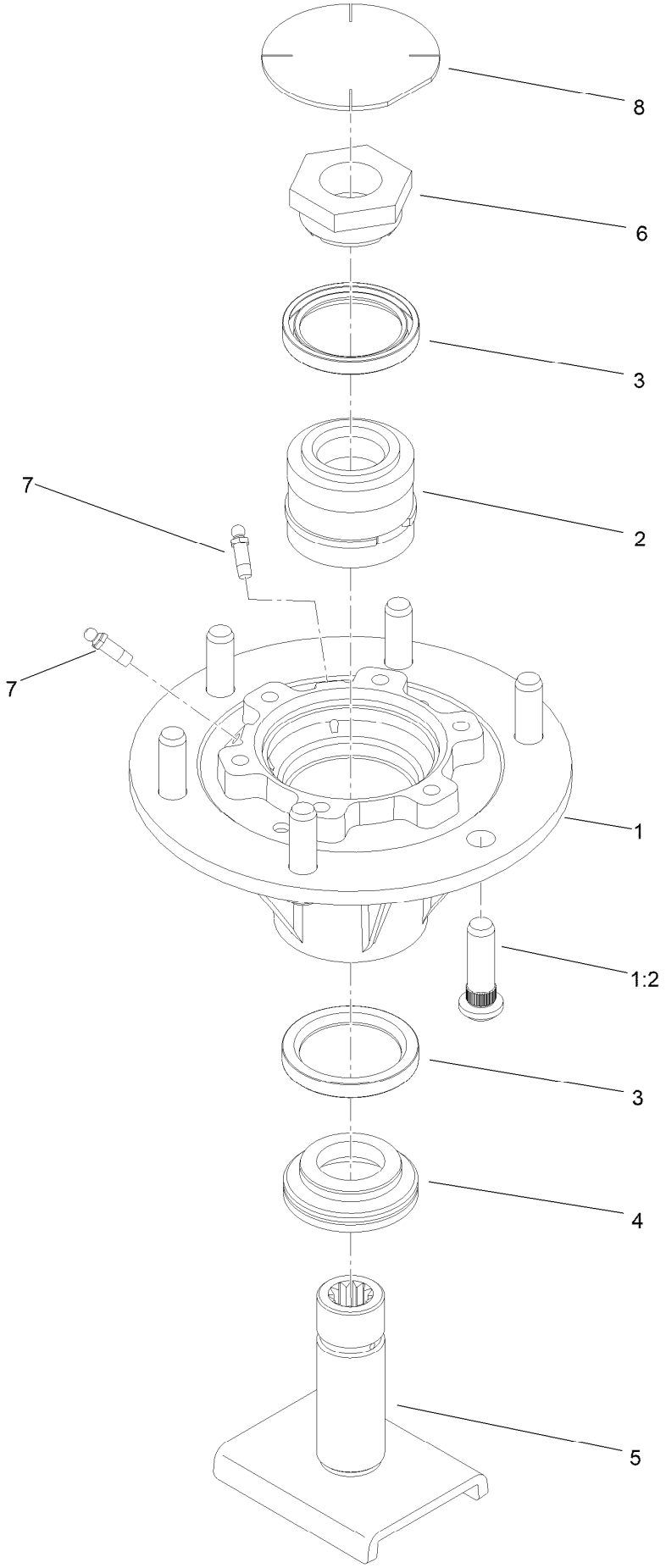

# Spindle Assembly No. 121-3666 (continued)

| Ref. | Part Number | Qty. | Description |
|---|---|---|---|
| 1 | 115-3434 | 1 | Spindle |
| 1:2 | 10-6830 | 6 | Stud-Type, Drive |
| 2 | 100-5703 | 1 | Spacer And Bearing ASM |
| 3 | 253-154 | 2 | Seal-Oil |
| 4 | 138-6416 | 1 | Spacer-Spindle, Shaft |
| 5 | 121-3664 | 1 | Spindle Shaft ASM |
| 6 | 100-5709 | 1 | Nut-Spindle, Spcl |
| 7 | 302-62 | 2 | Fitting-Grease |
| 8 | 94-2703 | 1 | Plug |

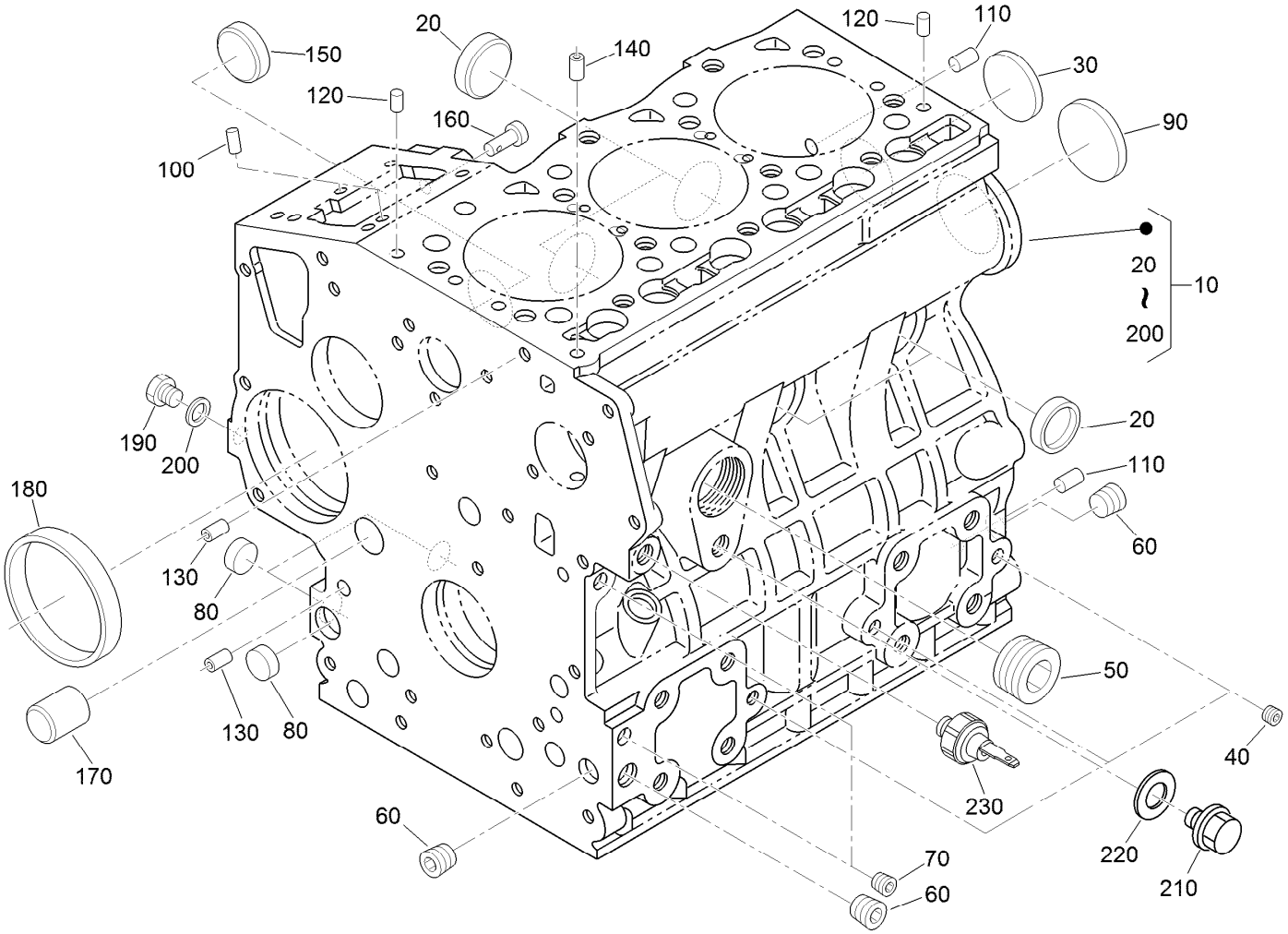


# Crankcase Assembly

| Ref. | Part Number | Qty. | Description |
|---|---|---|---|
| 10 | 115-3443 | 1 | Crankcase ASM |
| 20 | 98-9398 | 4 | Cap-Sealing |
| 30 | 98-7539 | 1 | Cap-Sealing |
| 40 | 98-9687 | 3 | Plug |
| 50 | 105-3779 | 1 | Plug |
| 60 | 98-9597 | 3 | Plug |
| 70 | 98-7487 | 2 | Plug |
| 80 | 98-9379 | 3 | Plug-Expansion |
| 90 | 98-9668 | 1 | Plug-Expansion |
| 100 | 98-9375 | 2 | Pin-Straight |
| 110 | 98-9377 | 2 | Pin-Straight |
| 120 | 98-9376 | 2 | Pin-Straight |

| Ref. | Part Number | Qty. | Description |
|---|---|---|---|
| 130 | 98-9387 | 2 | Pin-Pipe |
| 140 | 98-9539 | 1 | Pin-Pipe |
| 150 | 98-9599 | 1 | Plug |
| 160 | 98-9630 | 1 | Pin-Spring, Start |
| 170 | 98-9675 | 1 | Plug |
| 180 | 98-9656 | 1 | Bushing-Governor, Gear |
| 190 | 120-2559 | 1 | Plug |
| 200 | 98-7428 | 1 | Gasket |
| 210 | 99-3447 | 1 | Plug |
| 220 | 112-8325 | 1 | Washer |
| 230 | 98-9416 | 1 | Switch-Oil |

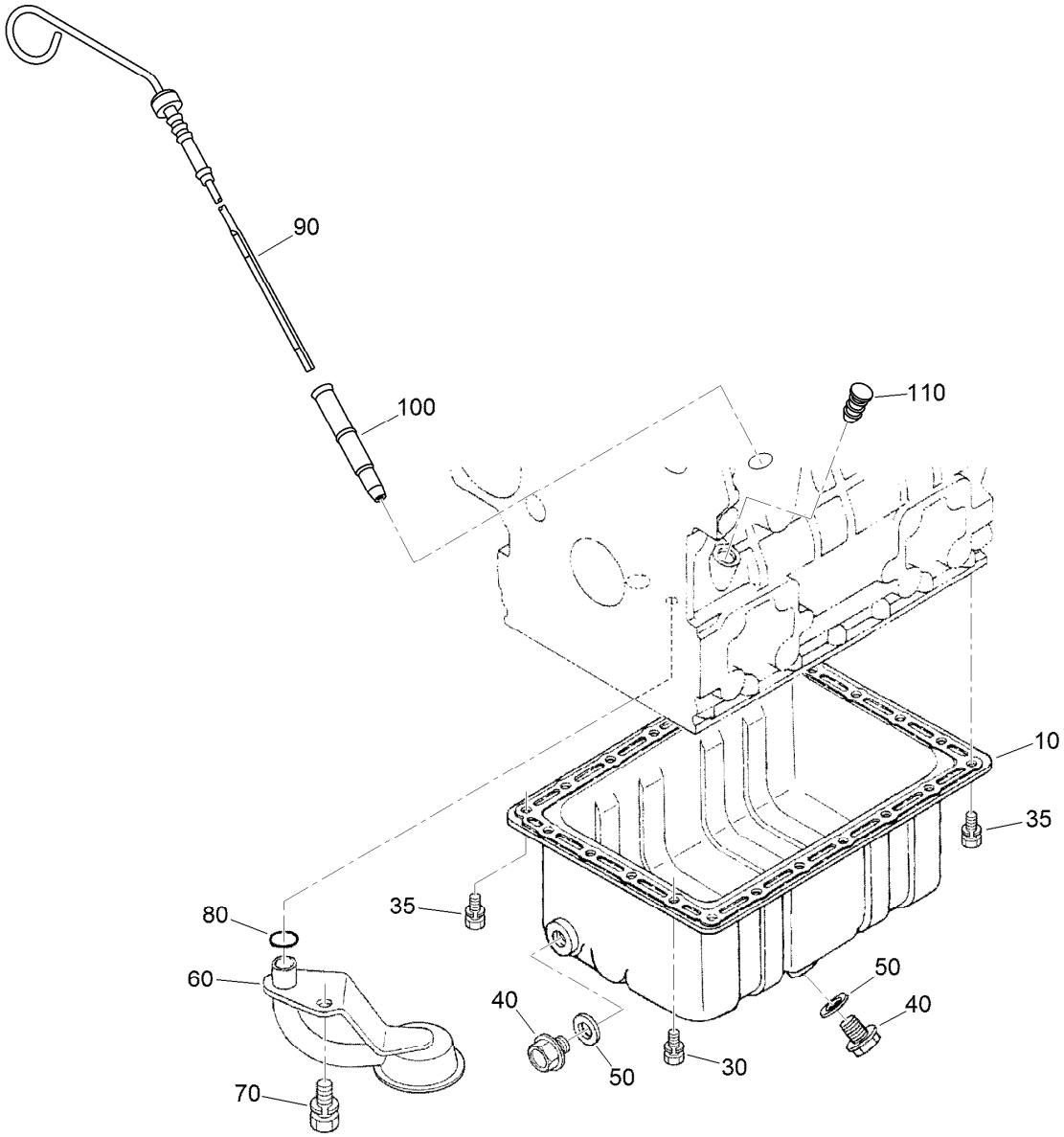


# Oil Pan and Dipstick Assembly

| *Ref.* | *Part Number* | *Qty.* | *Description* |
|---|---|---|---|
| 10 | 98-9685 | 1 | Pan-Oil |
| 30 | 98-9351 | 20 | Bolt |
| 35 | 98-9351 | 2 | Bolt |
| 40 | 114-8151 | 2 | Plug-Drain |
| 50 | 98-7524 | 2 | Gasket |
| 60 | 108-1401 | 1 | Base-Filter |
| 70 | 98-7526 | 1 | Bolt |
| 80 | 105-3776 | 1 | O-Ring |
| 90 | 104-9348 | 1 | Gauge-Oil |
| 100 | 105-4580 | 1 | Guide-Gauge, Oil |
| 110 | 110-3720 | 1 | Plug-Gauge, Oil |

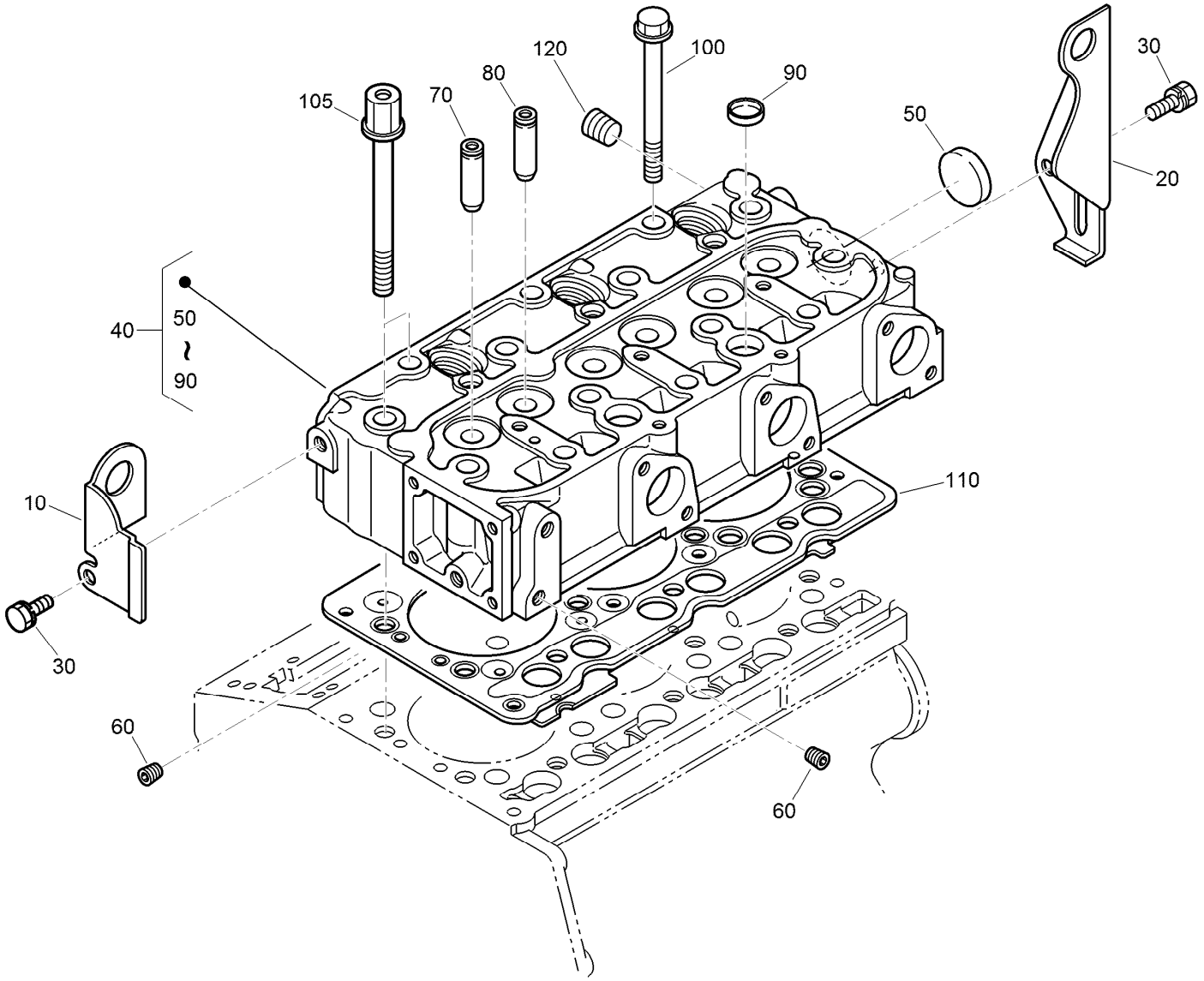


# Cylinder Head Assembly

| *Ref.* | *Part Number* | *Qty.* | *Description* |
|---|---|---|---|
| 10 | 130-1231 | 1 | Hook-Engine |
| 20 | 98-9478 | 1 | Hook-Engine |
| 30 | 100-9195 | 2 | Bolt |
| 40 | 130-1544 | 1 | Cylinder Head ASM |
| 50 | 105-3705 | 1 | Cap-Sealing |
| 60 | 98-9687 | 2 | Plug |
| 70 | 107-9066 | 3 | Guide-Valve, Inlet |
| 80 | 107-9067 | 3 | Guide-Valve, Exhaust |
| 90 | 98-9389 | 2 | Cap-Sealing |
| 100 | 98-9479 | 12 | Bolt-Head, Cylinder |
| 105 | 98-9647 | 2 | Bolt-Head, Cylinder |
| 110 | 108-6573 | 1 | Gasket-Head, Cylinder |
| 120 | 98-9444 | 1 | Plug |

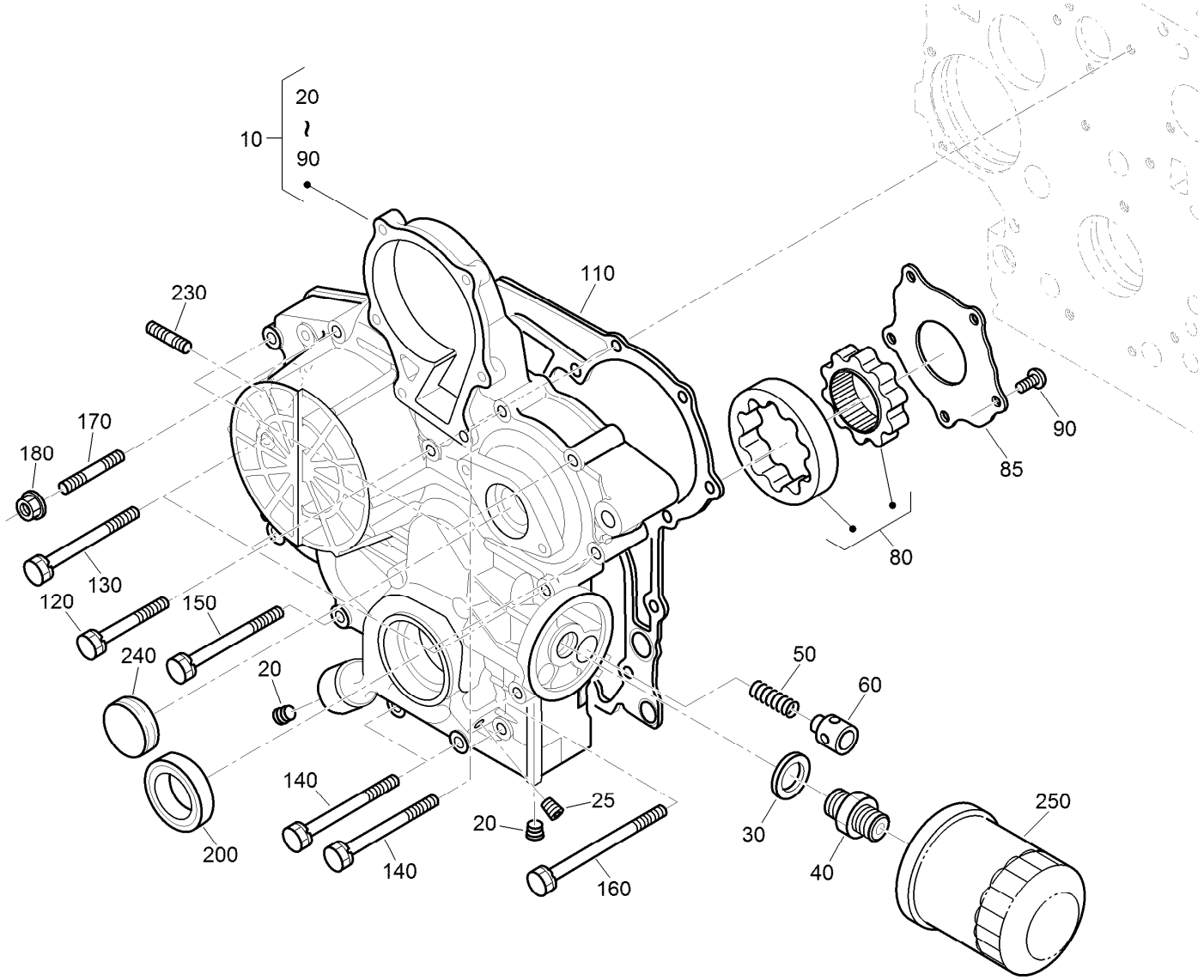


# Gear Case and Oil Filter Cartridge Assembly

| Ref. | Part Number | Qty. | Description |
|---|---|---|---|
| 10 | 115-4105 | 1 | Gear Case ASM |
| 20 | 127-0425 | 2 | Plug |
| 25 | 98-7487 | 1 | Plug |
| 30 | 98-7562 | 1 | Washer-Plain |
| 40 | 98-9388 | 1 | Joint-Pipe |
| 50 | 130-1511 | 1 | Spring |
| 60 | 130-1510 | 1 | Valve-Relief |
| 80 | 130-1508 | 1 | Rotor ASM |
| 85 | 130-1509 | 1 | Cover-Pump, Oil |
| 90 | 130-1164 | 5 | Screw-Binding |
| 110 | 98-9633 | 1 | Gasket-Case, Gear |

| Ref. | Part Number | Qty. | Description |
|---|---|---|---|
| 120 | 100-1765 | 3 | Bolt |
| 130 | 125-9063 | 4 | Bolt-Sems |
| 140 | 98-9356 | 4 | Bolt |
| 150 | 107-9074 | 1 | Bolt |
| 160 | 99-3510 | 1 | Bolt |
| 170 | 105-3709 | 1 | Stud |
| 180 | 100-2203 | 1 | Nut-Flange |
| 200 | 119-8038 | 1 | Seal-Oil |
| 230 | 105-3710 | 2 | Stud |
| 240 | 99-3515 | 1 | Plug-Gearcase |
| 250 | 108-3841 | 1 | Filter-Oil |

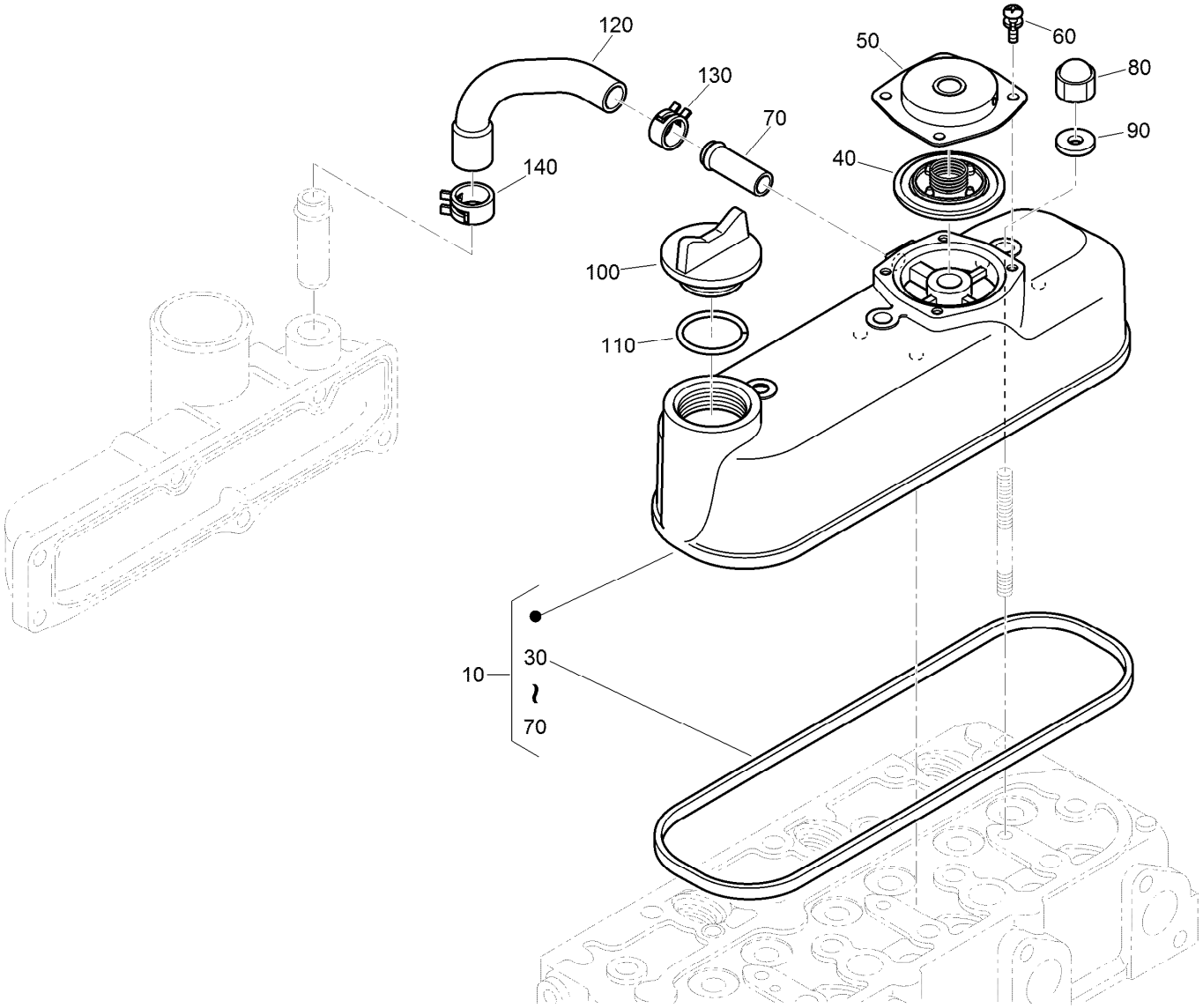


# Cylinder Head Cover Assembly

| *Ref.* | *Part Number* | *Qty.* | *Description* |
|---|---|---|---|
| 10 | 139-4544 | 1 | Cylinder Cover ASM |
| 30 | 98-9615 | 1 | Gasket-Cover, Head |
| 40 | 110-3715 | 1 | Valve-Breather |
| 50 | 110-3714 | 1 | Cover-Breather |
| 60 | 98-9364 | 4 | Screw (With Washer) |
| 70 | 98-7766 | 1 | Pipe-Return, Water |
| 80 | 98-9455 | 3 | Nut-Cap |
| 90 | 98-9454 | 3 | Gasket |
| 100 | 107-9075 | 1 | Plug-Filler, Oil |
| 110 | 131-3834 | 1 | O Ring |
| 120 | 139-4545 | 1 | Tube-Breather |
| 130 | 108-2859 | 1 | Clamp-Hose |
| 140 | 108-2860 | 1 | Clamp-Hose |

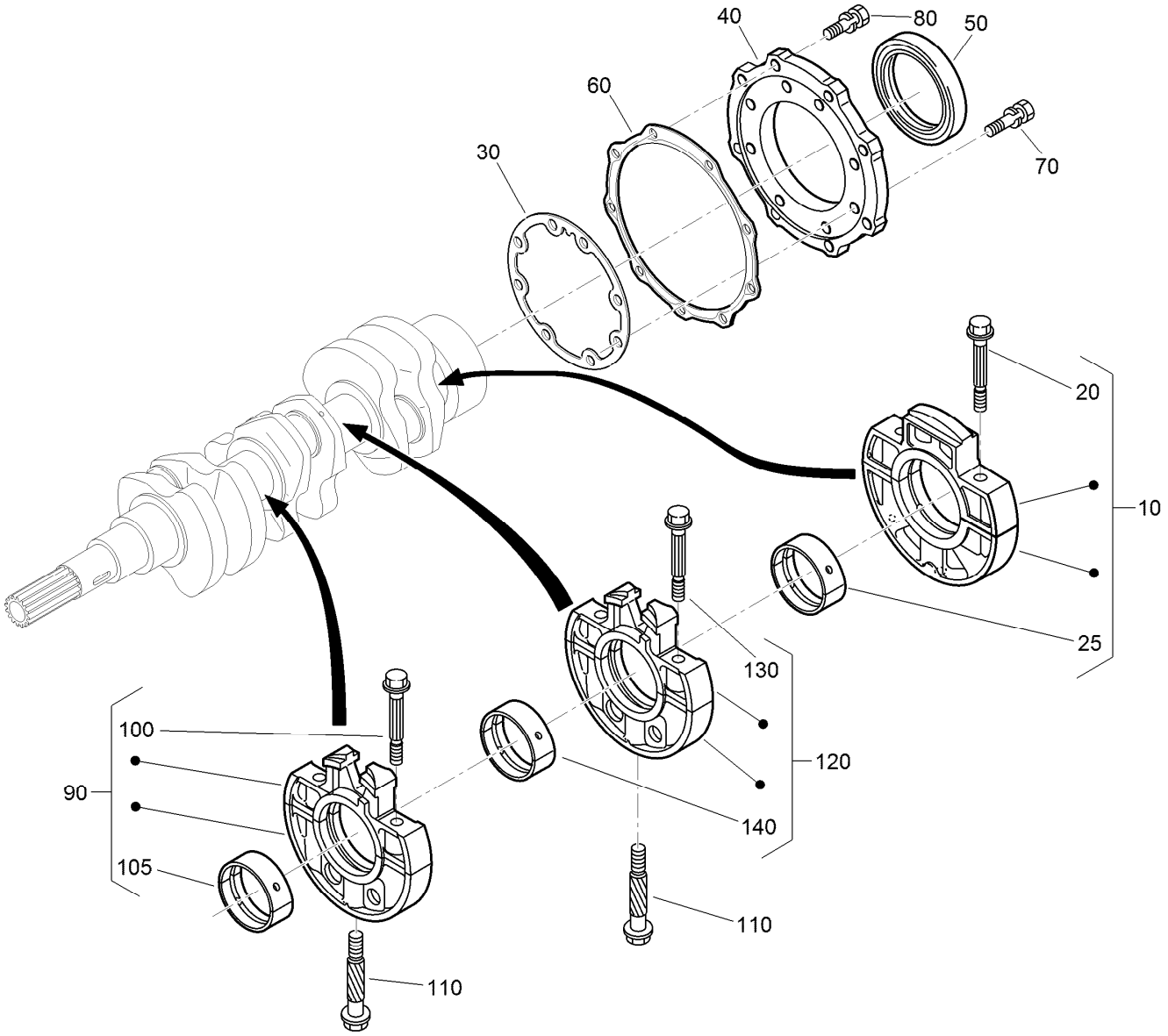


# Main Bearing Case Assembly

| Ref. | Part Number | Qty. | Description |
|---|---|---|---|
| 10 | 139-4546 | 1 | Bearing Case ASM |
| 20 | 98-9484 | 2 | Bolt-Case, Bearing |
| 25 | 115-4121 | 1 | Metal-Crankshaft (STD) |
| 25 | 112-7039 | 1 | Metal-Crankshaft (0.2Mm) |
| 25 | 112-7040 | 1 | Metal-Crankshaft (-0.4Mm) |
| 30 | 131-6554 | 1 | Gasket-Case, Bearing |
| 40 | 112-7046 | 1 | Cover-Case, Bearing |
| 50 | 112-0180 | 1 | Seal-Oil |
| 60 | 112-7037 | 1 | Gasket-Cover, Case |
| 70 | 127-0441 | 8 | Bolt |
| 80 | 140-2467 | 9 | Bolt |

| Ref. | Part Number | Qty. | Description |
|---|---|---|---|
| 90 | 115-4106 | 1 | Main Bearing Case ASM |
| 100 | 98-9484 | 2 | Bolt-Case, Bearing |
| 105 | 98-9524 | 1 | Metal-Crankshaft (STD Set) |
| 105 | 127-0433 | 1 | Metal-Crankshaft (-0.2MM) |
| 105 | 98-9531 | 1 | Bearing-Main (0.4MM) |
| 110 | 98-9485 | 2 | Bolt-Case, Bearing |
| 120 | 115-4107 | 1 | Main Bearing Case ASM |
| 130 | 98-9484 | 2 | Bolt-Case, Bearing |
| 140 | 98-9524 | 1 | Metal-Crankshaft (STD Set) |
| 140 | 127-0433 | 1 | Metal-Crankshaft (-0.2MM) |
| 140 | 98-9531 | 1 | Bearing-Main (0.4MM) |

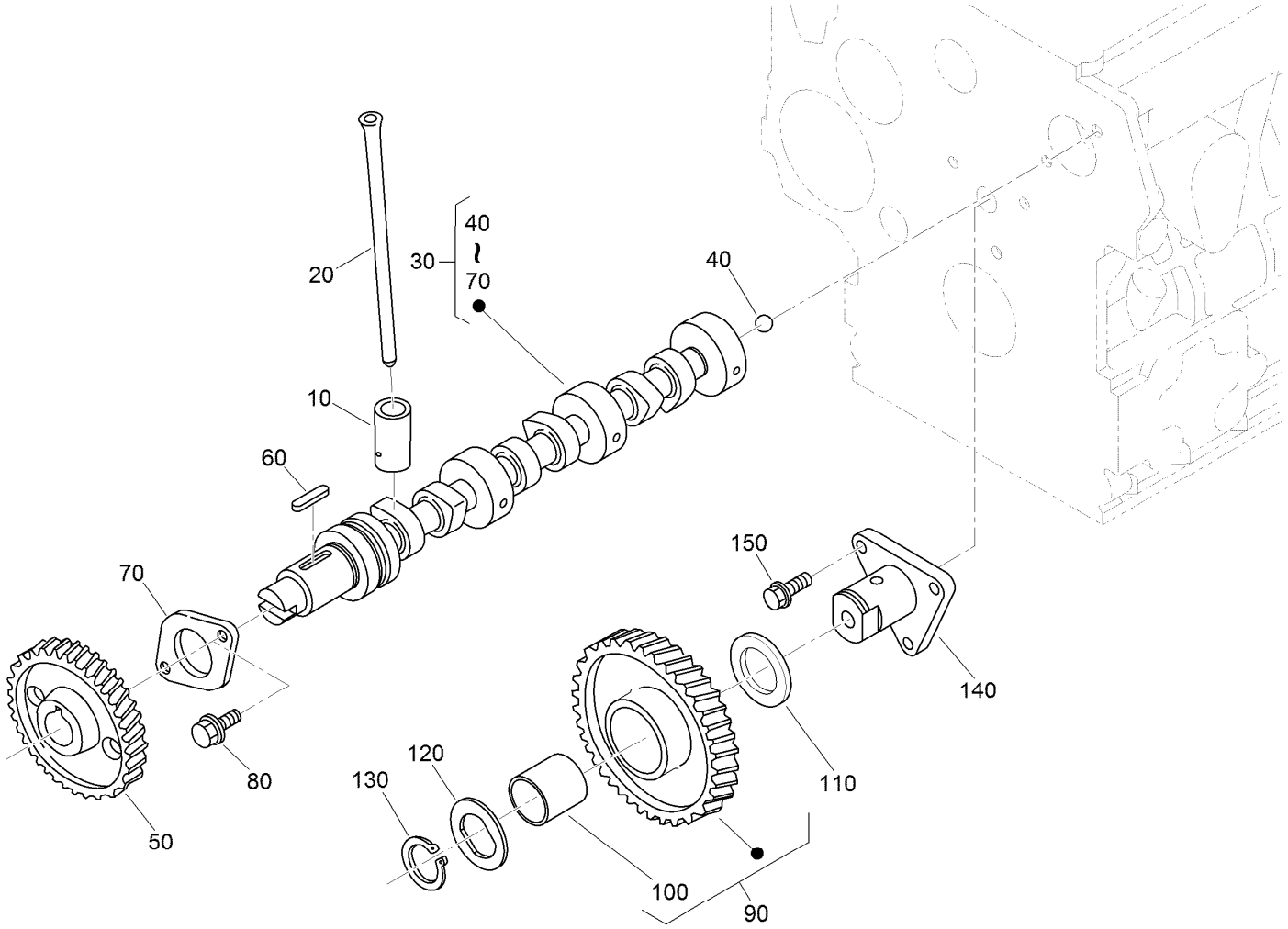


# Camshaft and Idle Gear Shaft Assembly

| Ref. | Part Number | Qty. | Description |
|---|---|---|---|
| 10 | 112-0185 | 6 | Tappet |
| 20 | 127-0421 | 6 | Rod-Push |
| 30 | 130-1545 | 1 | Camshaft ASM |
| 40 | 110-3729 | 1 | Ball |
| 50 | | 1 | Gear-Cam ● |
| 60 | 98-9378 | 1 | Key-Feather |
| 70 | 131-6555 | 1 | Stopper (Camshaft) |
| 80 | 98-7692 | 2 | Bolt |
| 90 | 117-7584 | 1 | Idler Gear ASM |
| 100 | 117-7585 | 1 | Bushing-Gear, Idle |
| 110 | 98-9535 | 1 | Collar-Gear, Idle |
| 120 | 98-9536 | 1 | Collar-Gear, Idle |
| 130 | 98-9534 | 1 | Circlip-Gear, Idle |
| 140 | 98-9533 | 1 | Shaft-Gear, Idle |
| 150 | 98-7692 | 3 | Bolt |

● Not serviced separately

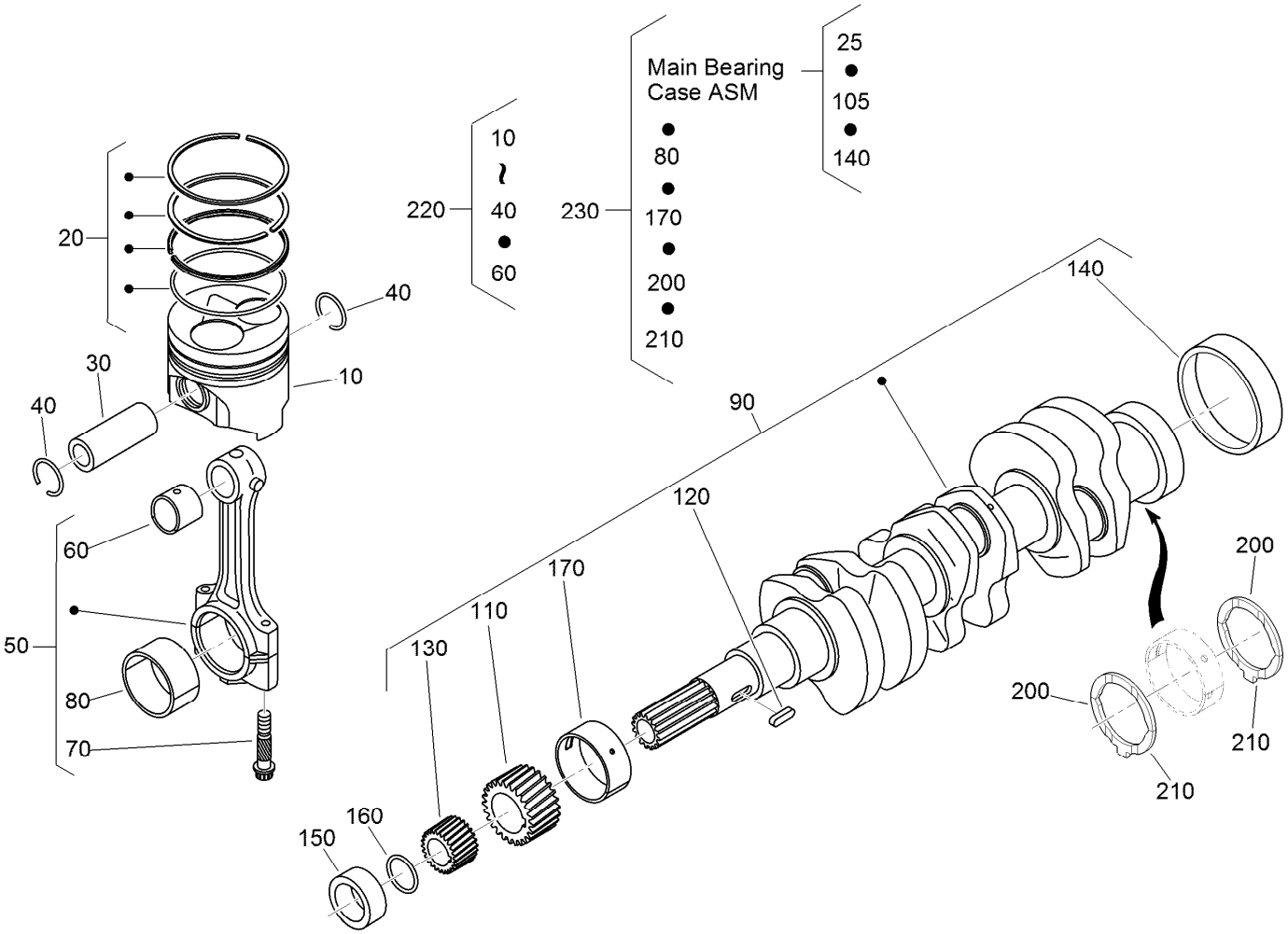


# Piston and Crankshaft Assembly

| Ref. | Part Number | Qty. | Description |
|---|---|---|---|
| 10 | 130-1546 | 3 | Piston (STD) |
| 10 | 130-1549 | 3 | Piston (+0.50MM) |
| 20 | 130-1506 | 3 | Piston Ring ASM (STD) |
| 20 | 130-1507 | 3 | Piston Ring ASM (+0.50MM) |
| 30 | 98-9513 | 3 | Pin-Piston |
| 40 | 98-9514 | 6 | Circlip-Pin, Piston |
| 50 | 117-7586 | 3 | Connecting Rod ASM |
| 60 | 115-3014 | 3 | Bushing-Pin, Piston |
| 70 | 98-9517 | 6 | Bolt-Rod, Connecting |
| 80 | 98-9553 | 3 | Bearing-Rod (STD) |
| 80 | 98-9519 | 3 | Bearing-Rod (-0.2MM) |
| 80 | 117-7588 | 3 | Metal-Crankpin (-0.4MM) |
| 90 | 130-1375 | 1 | Crankshaft ASM |
| 110 | 117-7561 | 1 | Gear-Crankshaft |
| 120 | 98-9666 | 1 | Key |
| 130 | 127-0445 | 1 | Gear-Drive, Oil Pump |
| 140 | 98-9522 | 1 | Sleeve-Crankshaft |
| 150 | 127-0444 | 1 | Collar-Crankshaft |

| Ref. | Part Number | Qty. | Description |
|---|---|---|---|
| 160 | 105-3783 | 1 | O-Ring |
| 170 | 112-7005 | 1 | Bearing-Main (STD) |
| 170 | 98-9528 | 1 | Bearing-Main (-0.2MM) |
| 170 | 127-0432 | 1 | Metal-Crankshaft (-0.4MM) |
| 200 | 98-9413 | 2 | Bearing-Thrust (STD) |
| 200 | 127-0416 | 2 | Metal-Side (+0.2Mm) |
| 200 | 127-0417 | 2 | Metal-Side (+0.40Mm) |
| 210 | 98-9688 | 2 | Bearing-Thrust (STD) |
| 210 | 127-0437 | 2 | Metal-Side (+0.2MM) |
| 210 | 127-0438 | 2 | Metal-Side (+0.40MM) |
| 220 | 130-1547 | 3 | Piston Kit |
| 220 | 130-1548 | 3 | Piston Kit |
| 230 | 130-1501 | 1 | Engine Metal Kit (STD) |
| 230 | 130-1498 | 1 | Engine Metal Kit (-0.20Mm/+0.20Mm) |
| 230 | 130-1499 | 1 | Engine Metal Kit (-0.40Mm/+0.40Mm) |

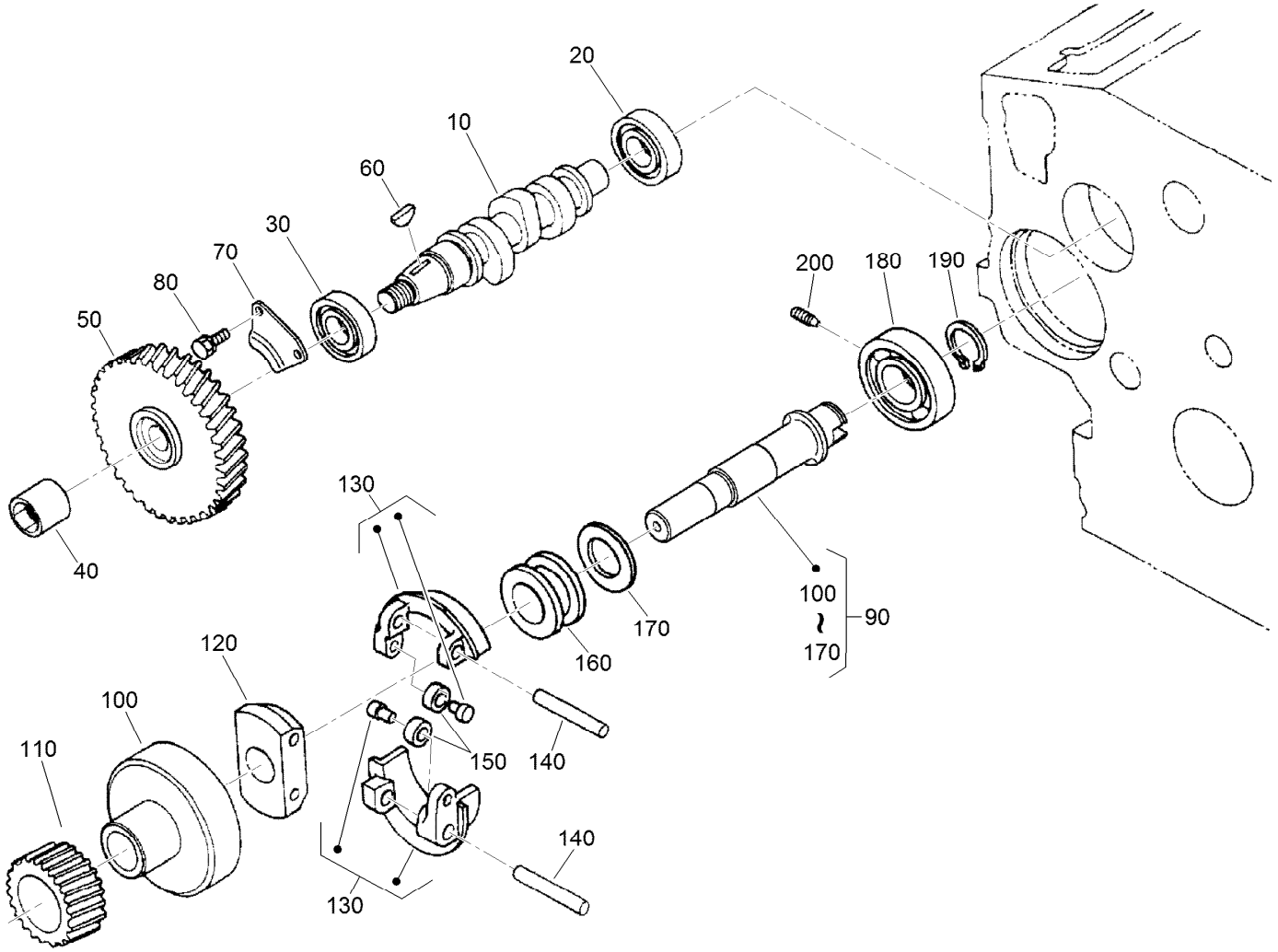


# Fuel Camshaft and Governor Shaft Assembly

| Ref. | Part Number | Qty. | Description |
|---|---|---|---|
| 10 | 139-4547 | 1 | Camshaft-Fuel |
| 20 | 107-9077 | 1 | Bearing-Ball |
| 30 | 107-9078 | 1 | Bearing-Ball |
| 40 | 130-1512 | 1 | Nut |
| 50 | 120-2562 | 1 | Gear-Pump, Injection |
| 60 | 98-9595 | 1 | Key-Woodruff |
| 70 | 98-9511 | 1 | Stopper-Fuel, Camshaft |
| 80 | 98-7692 | 2 | Bolt |
| 90 | 98-9644 | 1 | Governor Shaft ASM |
| 100 | 98-9562 | 1 | Holder-Gear, Governor |

| Ref. | Part Number | Qty. | Description |
|---|---|---|---|
| 110 | 98-9673 | 1 | Gear-Governor |
| 120 | 98-9561 | 1 | Holder-Weight, Governor |
| 130 | 98-9559 | 2 | Governor Weight ASM |
| 140 | 98-9560 | 2 | Shaft-Weight, Governor |
| 150 | 98-9692 | 2 | Roller |
| 160 | 98-9563 | 1 | Sleeve-Governor |
| 170 | 98-9564 | 1 | Washer-Thrust |
| 180 | 107-9079 | 1 | Bearing-Ball |
| 190 | 98-9657 | 1 | Circlip-Shaft, Governor |
| 200 | 98-9565 | 1 | Screw-Set |

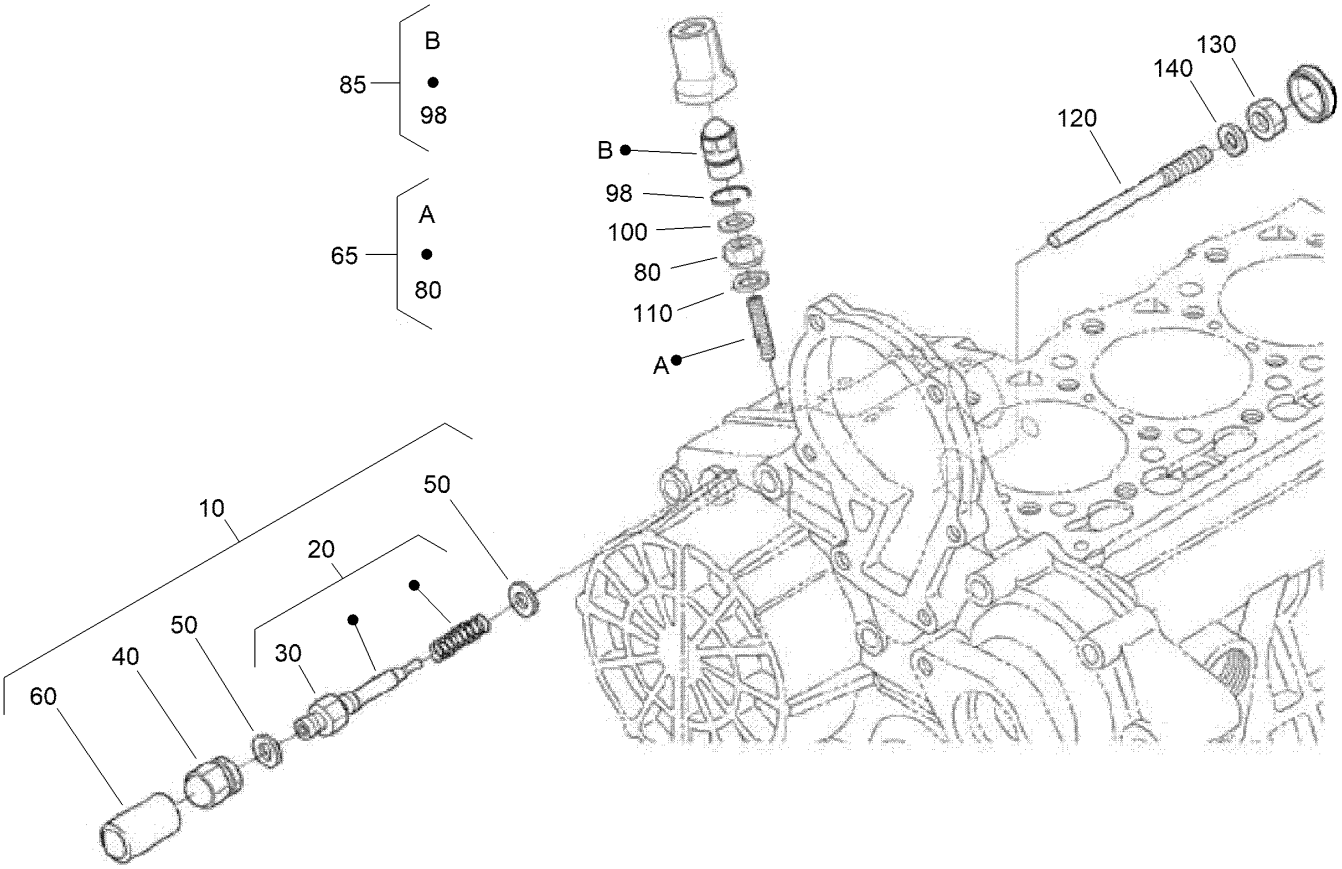


# Idle Apparatus and Stop Solenoid Assembly

| *Ref.* | *Part Number* | *Qty.* | *Description* |
|---|---|---|---|
| 10 | 98-9678 | 1 | Idle Apparatus ASM |
| 20 | 112-7014 | 1 | Adjusting Bolt ASM |
| 30 | 98-9439 | 1 | Nut |
| 40 | 112-0181 | 1 | Nut |
| 50 | 98-7654 | 2 | Gasket |
| 60 | 98-7656 | 1 | Cap |
| 65 | 140-2470 | 1 | Adjusting Bolt ASM |
| 80 | 139-4548 | 1 | Nut-Lock |
| 85 | 140-2471 | 1 | Cap Nut ASM |
| 98 | 140-2472 | 1 | Circlip-Int |
| 100 | 98-7654 | 1 | Gasket |
| 110 | 107-9081 | 1 | Gasket |
| 120 | 131-6556 | 1 | Bolt |
| 130 | 98-7572 | 1 | Nut |
| 140 | 98-7654 | 1 | Gasket |

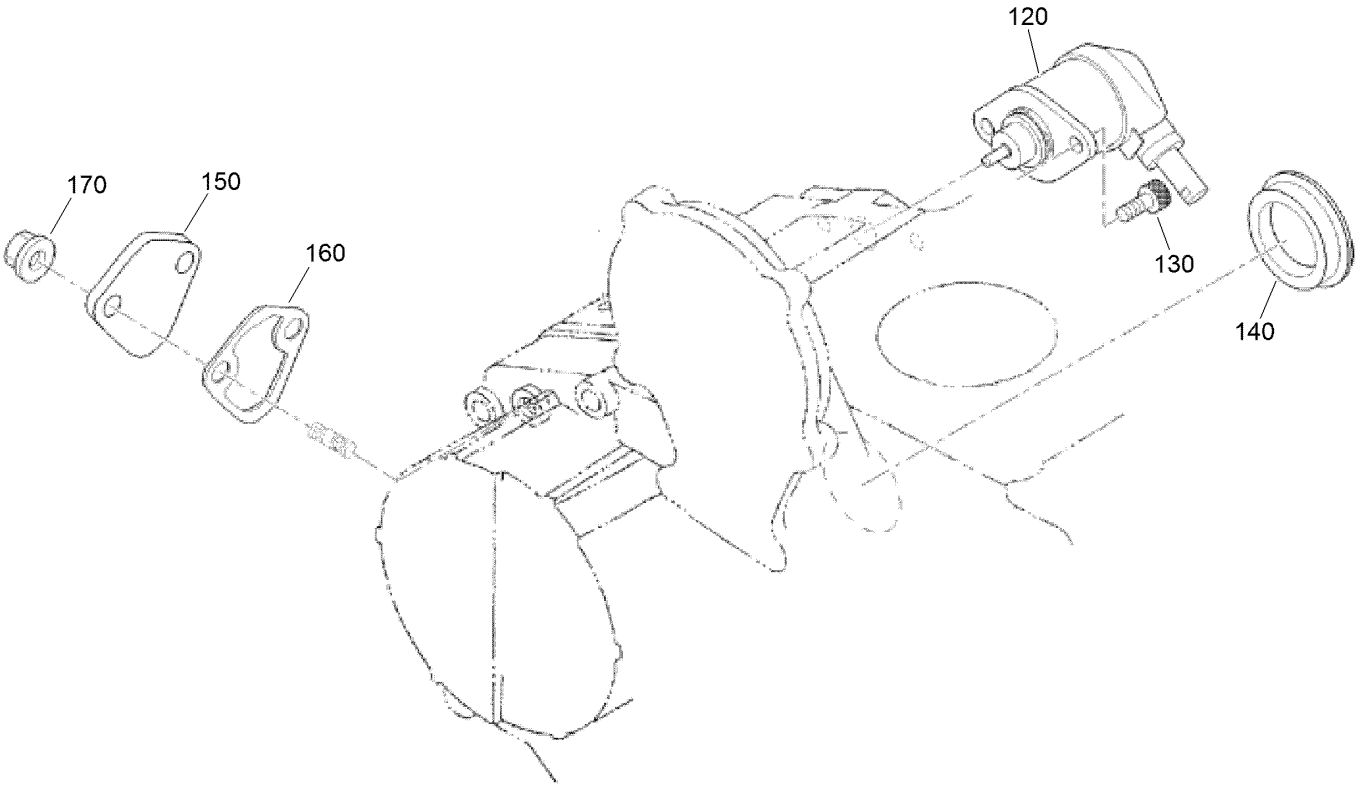


# Solenoid Assembly

| *Ref.* | *Part Number* | *Qty.* | *Description* |
|---|---|---|---|
| 120 | 104-5155 | 1 | Solenoid-Stop |
| 130 | 130-1155 | 2 | Screw-HSH |
| 140 | 112-7016 | 1 | Cover-Pump |
| 150 | 99-3514 | 1 | Cover |
| 160 | 117-7562 | 1 | Gasket-Pump, Fuel |
| 170 | 100-2203 | 2 | Nut-Flange |

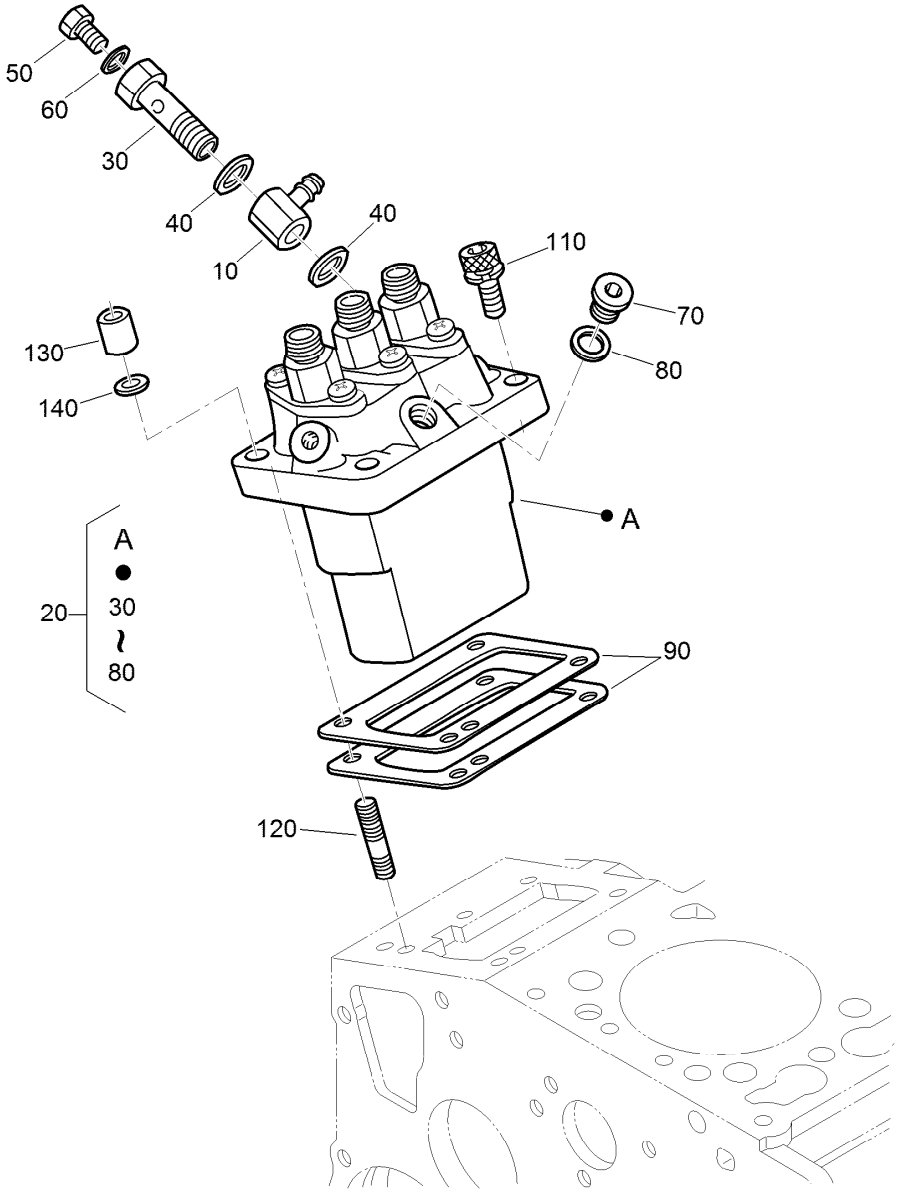


# Injection Pump Assembly

| Ref. | Part Number | Qty. | Description |
|---|---|---|---|
| 10 | 139-4549 | 1 | Joint-Eye |
| 20 | 98-9643 | 1 | Injection Pump ASM |
| 30 | 98-9464 | 1 | Bolt-Joint |
| 40 | 98-9445 | 2 | Gasket |
| 50 | 98-9430 | 1 | Screw |
| 60 | 98-9446 | 1 | Gasket |
| 70 | 98-9466 | 1 | Plug |
| 80 | 98-9451 | 1 | Gasket |
| 90 | 98-9456 | 1 | Shim-Injection (0.20MM) |

| Ref. | Part Number | Qty. | Description |
|---|---|---|---|
| 90 | 98-9457 | 1 | Shim-Injection (0.25MM) |
| 90 | 98-9458 | 1 | Shim-Injection (0.30MM) |
| 90 | 115-3046 | 1 | Shim-Injection (0.35MM) |
| 90 | 115-3045 | 1 | Shim-Injection (0.175MM) |
| 110 | 117-7564 | 2 | Bolt-Hex Soc HD |
| 120 | 98-9438 | 2 | Stud |
| 130 | 98-9440 | 2 | Nut-Cap |
| 140 | 98-7699 | 2 | Washer-Spring |

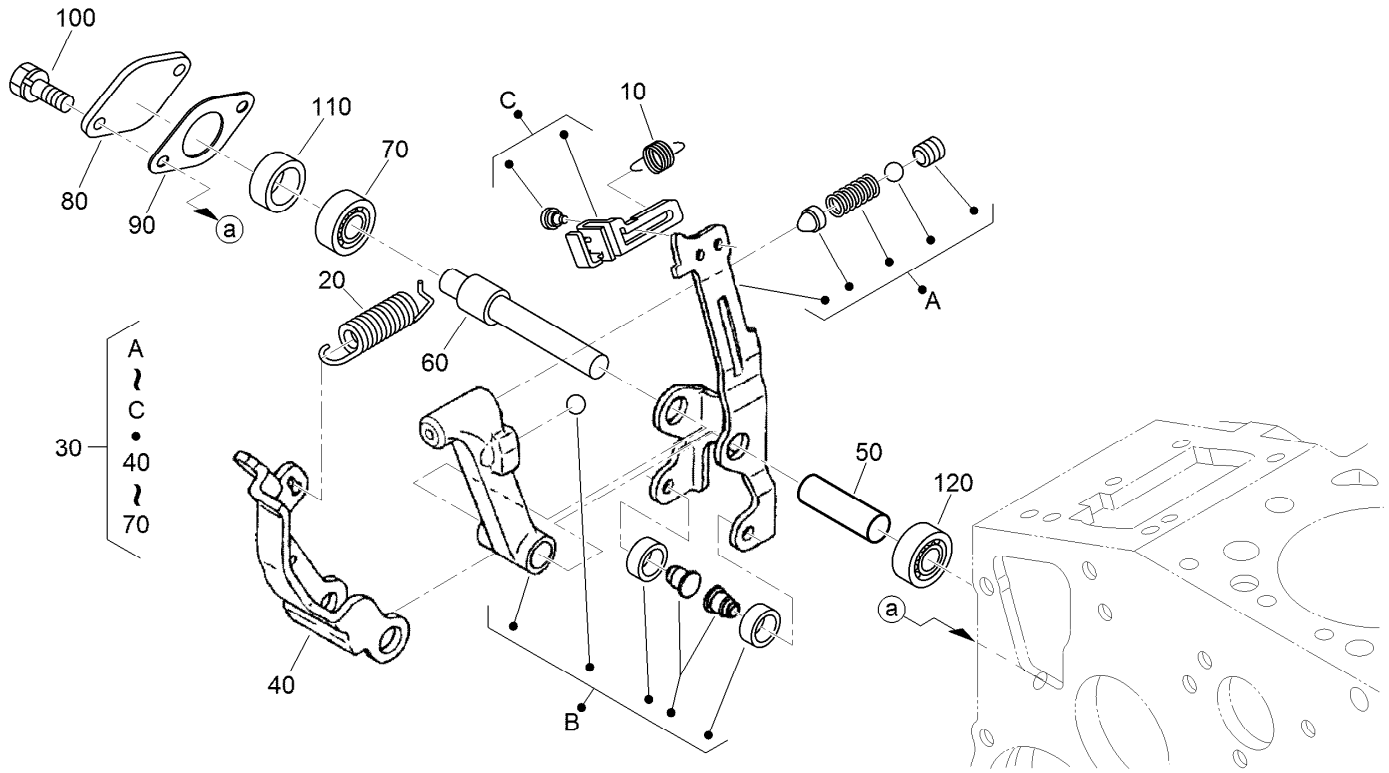


# Governor Assembly

| Ref. | Part Number | Qty. | Description |
|---|---|---|---|
| 10 | 105-3786 | 1 | Spring-Start |
| 20 | 98-9681 | 1 | Spring-Governor |
| 30 | 115-4502 | 1 | Fork Lever ASM |
| 40 | 107-9084 | 1 | Lever-Fork |
| 50 | 107-9085 | 1 | Shaft-Lever, Fork |
| 60 | 107-9086 | 1 | Shaft-Lever, Fork |
| 70 | 98-9570 | 1 | Bearing-Miniaturize |
| 80 | 115-4122 | 1 | Cover-Shaft, Fork Lever |
| 90 | 98-9682 | 1 | Gasket |
| 100 | 98-9350 | 2 | Bolt |
| 110 | 98-9567 | 1 | Collar |
| 120 | 98-9571 | 1 | Bearing-Miniaturize |

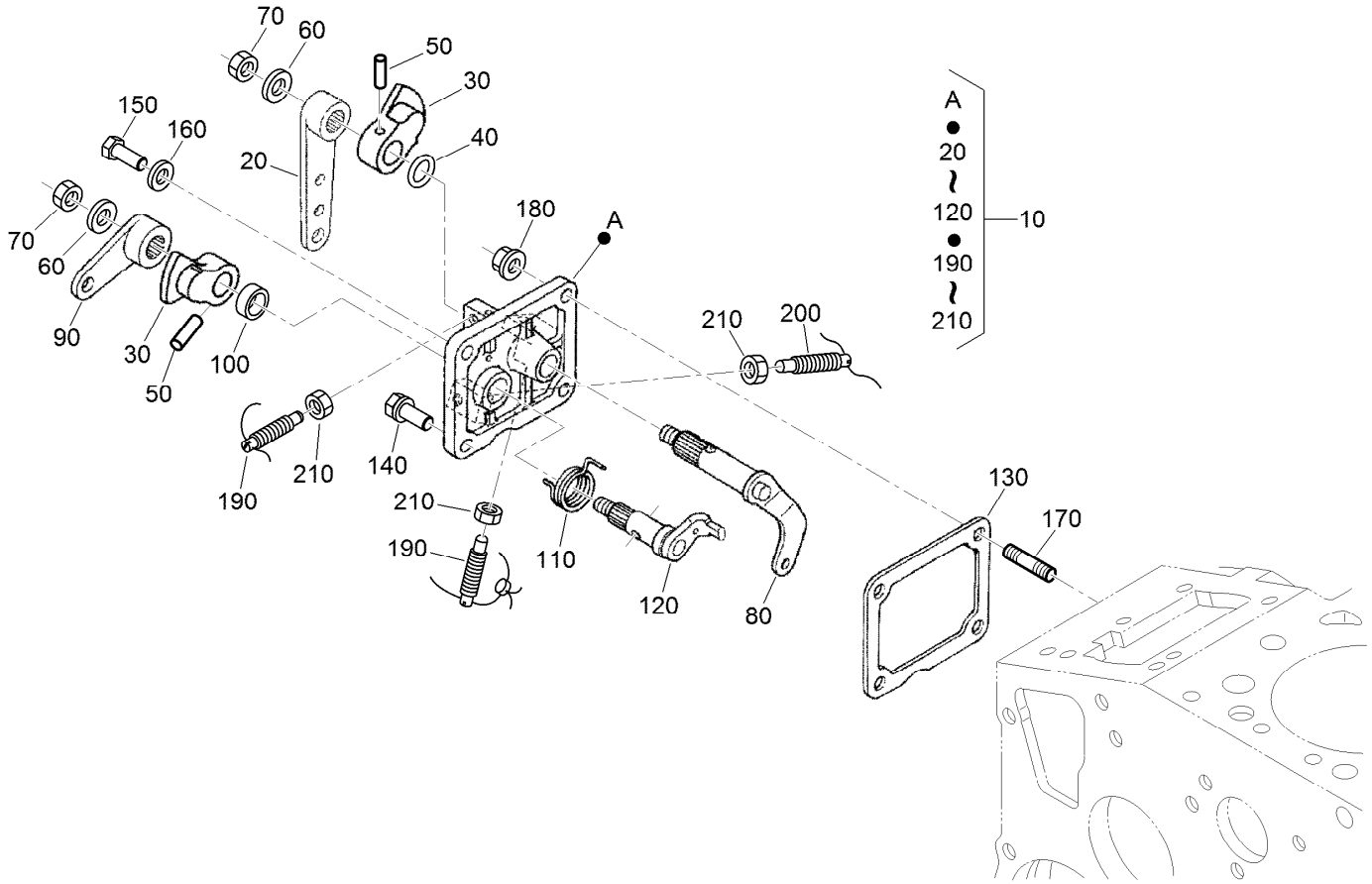


# Speed Control Plate Assembly

| Ref. | Part Number | Qty. | Description |
|---|---|---|---|
| 10 | 105-3735 | 1 | Control Plate ASM |
| 20 | 98-9662 | 1 | Lever-Control, Speed |
| 30 | 98-9572 | 2 | Lever-Control, Speed |
| 40 | 105-3788 | 1 | O-Ring |
| 50 | 98-7602 | 2 | Pin-Spring |
| 60 | 98-9594 | 2 | Washer-Plain |
| 70 | 98-9589 | 2 | Nut |
| 80 | 98-9658 | 1 | Governor Lever ASM |
| 90 | 98-9663 | 1 | Lever-Stop, Engine |
| 100 | 98-7601 | 1 | Seal-Oil |
| 110 | 98-9472 | 1 | Spring-Return |

| Ref. | Part Number | Qty. | Description |
|---|---|---|---|
| 120 | 98-9664 | 1 | Shaft-Lever, Stop |
| 130 | 98-9637 | 1 | Gasket |
| 140 | 98-7692 | 1 | Bolt |
| 150 | 127-0401 | 1 | Bolt-Hex |
| 160 | 98-7654 | 1 | Gasket |
| 170 | 105-3710 | 2 | Stud |
| 180 | 100-2203 | 2 | Nut-Flange |
| 190 | 117-7565 | 2 | Bolt-Adjusting |
| 200 | 117-7566 | 1 | Bolt-Adjusting |
| 210 | 98-7572 | 3 | Nut |

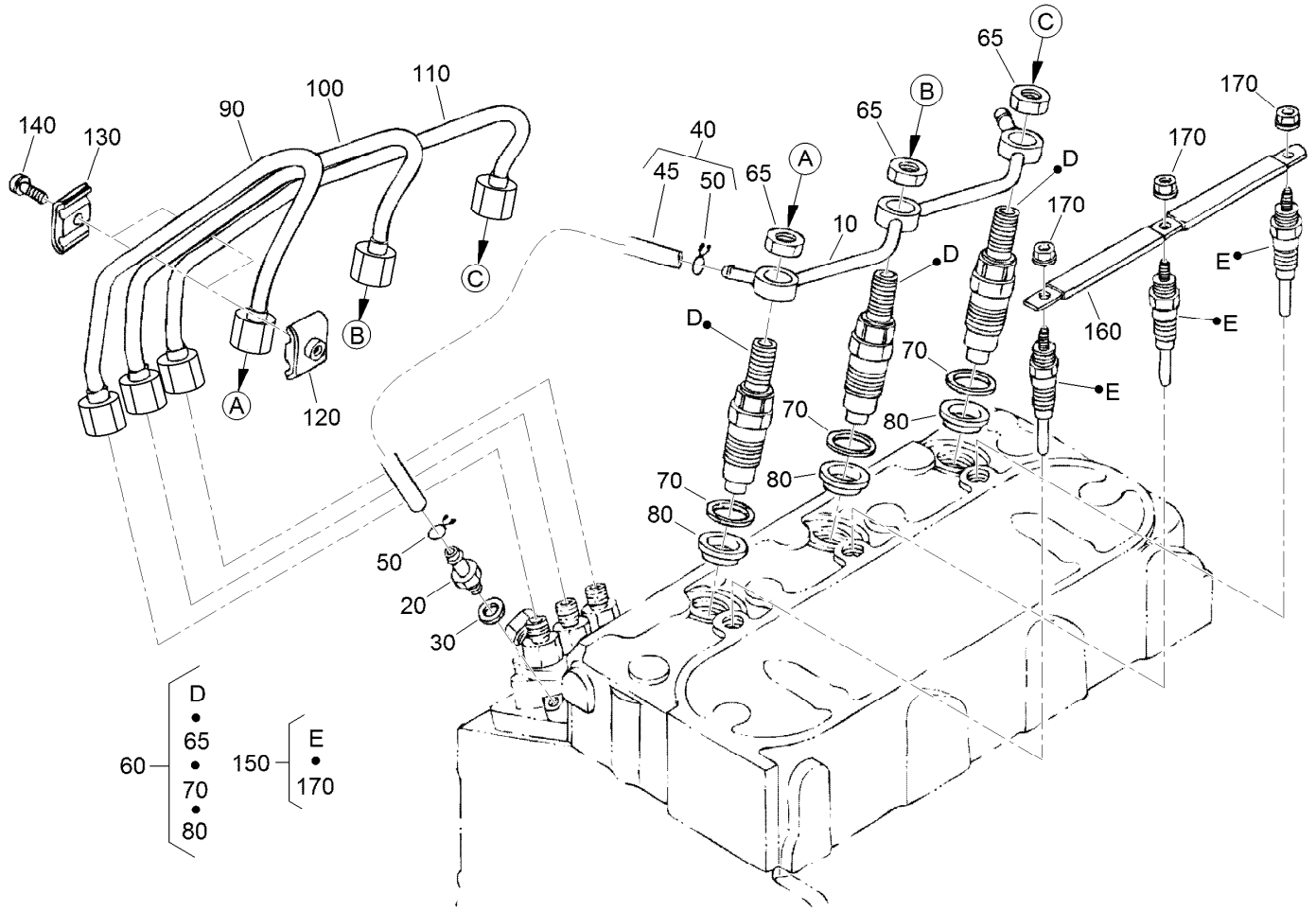


# Nozzle Holder and Glow Plug Assembly

| Ref. | Part Number | Qty. | Description |
|---|---|---|---|
| 10 | 98-9620 | 1 | Overflow Pipe ASM |
| 20 | 98-9431 | 1 | Screw-Bleeder, Air |
| 30 | 98-7654 | 1 | Gasket |
| 40 | 140-2456 | 1 | Overflow Pipe ASM |
| 45 | 140-2457 | 1 | Pipe-Overflow |
| 50 | 98-7671 | 2 | Clip-Pipe |
| 60 | 115-3018 | 3 | Nozzle Holder Kit |
| 65 | 121-2411 | 3 | Nut |
| 70 | 98-7676 | 3 | Gasket |
| 80 | 98-7677 | 3 | Seal-Heat |

| Ref. | Part Number | Qty. | Description |
|---|---|---|---|
| 90 | 98-9622 | 1 | Pipe-Injection |
| 100 | 98-9654 | 1 | Pipe-Injection |
| 110 | 98-9655 | 1 | Pipe-Injection |
| 120 | 98-7682 | 2 | Clamp-Pipe |
| 130 | 98-7683 | 2 | Clamp-Pipe |
| 140 | 98-7684 | 2 | Screw (W/Washer) |
| 150 | 130-1411 | 3 | Plug-Glow |
| 160 | 98-9631 | 1 | Cord-Plug, Glow |
| 170 | 99-8377 | 3 | Nut-Flange |

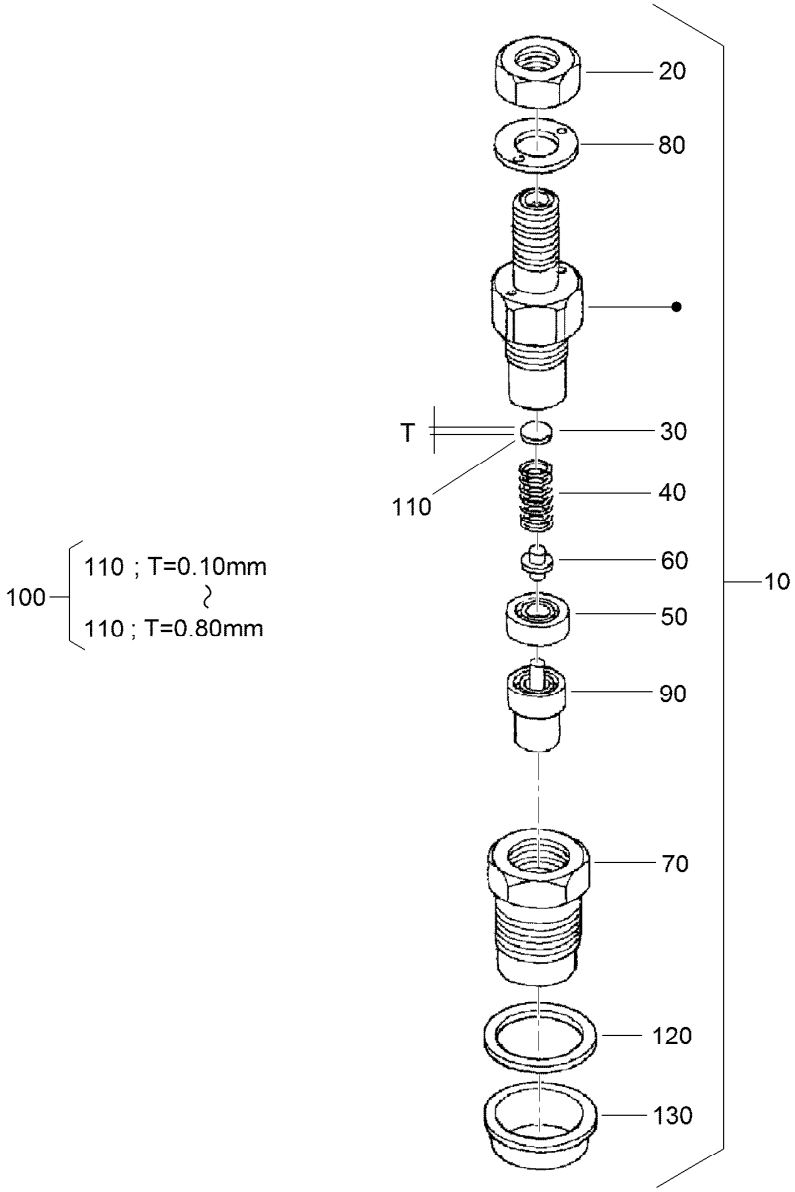


# Nozzle Holder Assembly

| Ref. | Part Number | Qty. | Description |
|---|---|---|---|
| 10 | 115-3018 | 3 | Nozzle Holder Kit |
| 20 | 121-2411 | 3 | Nut |
| 30 | 99-8302 | 3 | Washer-Adjusting |
| 40 | 99-8303 | 3 | Spring-Nozzle |
| 50 | 99-8304 | 3 | Spacer-Distance |
| 60 | 99-8305 | 3 | Rod-Push |
| 70 | 99-8306 | 3 | Nut-Nozzle |
| 80 | 99-8307 | 3 | Washer-Plain |
| 90 | 115-3020 | 3 | Piece-Nozzle |
| 100 | 99-8309 | 3 | Adjusting Washer ASM |
| 110 | 99-8310 | 3 | Washer-Adjust (0.10MM) |

| Ref. | Part Number | Qty. | Description |
|---|---|---|---|
| 110 | 99-8311 | 3 | Washer-Adjust (0.20MM) |
| 110 | 99-8312 | 3 | Washer-Adjust (0.30MM) |
| 110 | 99-8313 | 3 | Washer-Adjust (0.40MM) |
| 110 | 99-8314 | 3 | Washer-Adjust (0.50MM) |
| 110 | 99-8315 | 3 | Washer-Adjust (0.52MM) |
| 110 | 99-8316 | 3 | Washer-Adjust (0.54MM) |
| 110 | 99-8317 | 3 | Washer-Adjust (0.56MM) |
| 110 | 99-8318 | 3 | Washer-Adjust (0.58MM) |
| 110 | 99-8319 | 3 | Washer-Adjust (0.80MM) |
| 120 | 98-7676 | 3 | Gasket |
| 130 | 98-7677 | 3 | Seal-Heat |

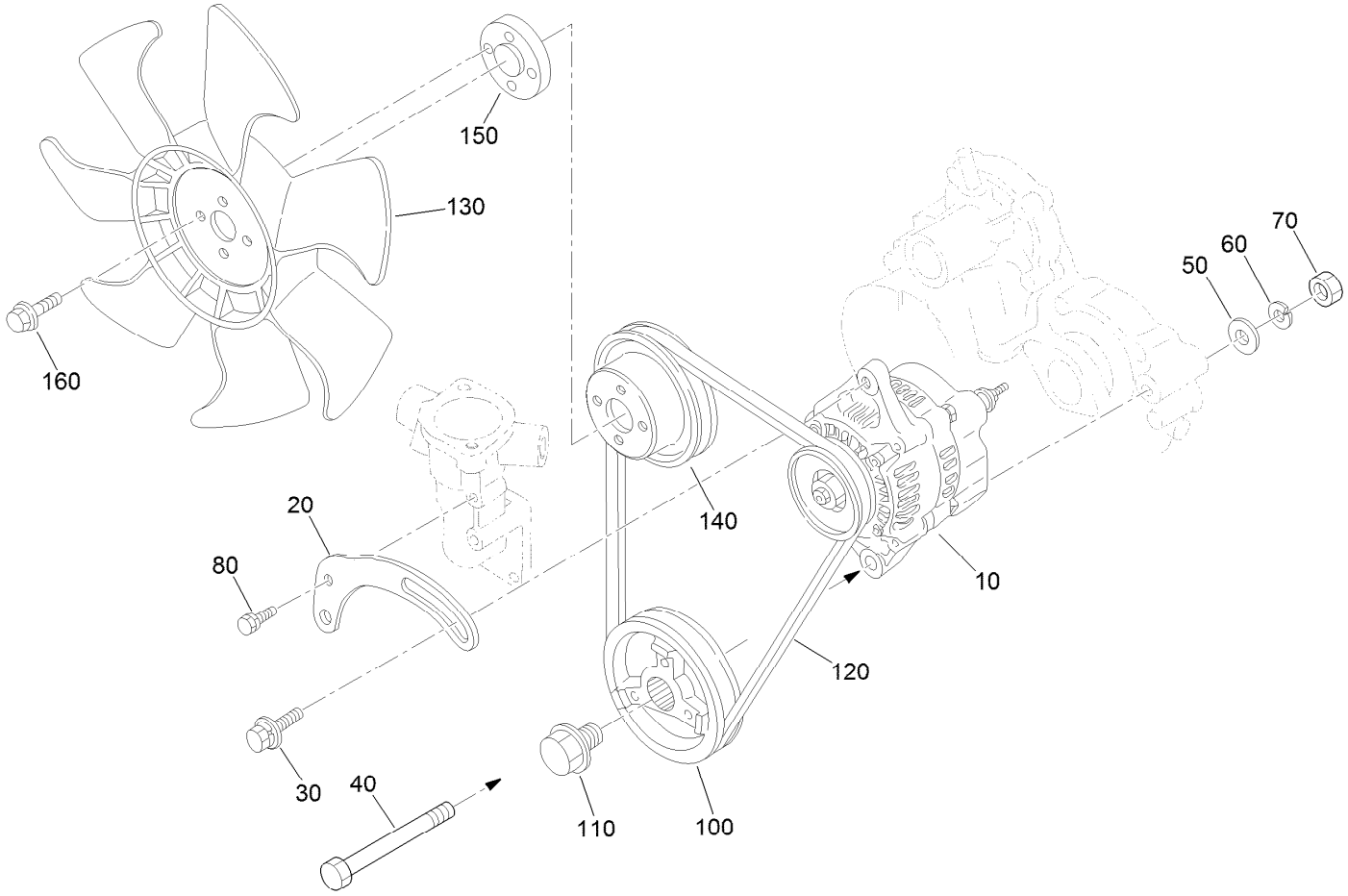


# Alternator, Pulley and Fan Assembly

| Ref. | Part Number | Qty. | Description |
|---|---|---|---|
| 10 | 131-6557 | 1 | Alternator ASM |
| 20 | 112-7047 | 1 | Stay-Dynamo |
| 30 | 108-7088 | 1 | Bolt |
| 40 | 98-9360 | 1 | Bolt |
| 50 | 98-9366 | 1 | Washer-Plain |
| 60 | 98-7738 | 1 | Washer-Spring |
| 70 | 98-7737 | 1 | Nut |
| 80 | 98-7692 | 1 | Bolt |
| 100 | 98-9473 | 1 | Pulley-Drive, Fan |
| 110 | 98-9585 | 1 | Bolt |
| 120 | 104-3494 | 1 | Belt-V |
| 130 | 104-4246 | 1 | Fan-Engine |
| 140 | 130-1567 | 1 | Pulley-Fan |
| 150 | 108-2872 | 1 | Collar-Fan |
| 160 | 108-2873 | 4 | Bolt-Flange |

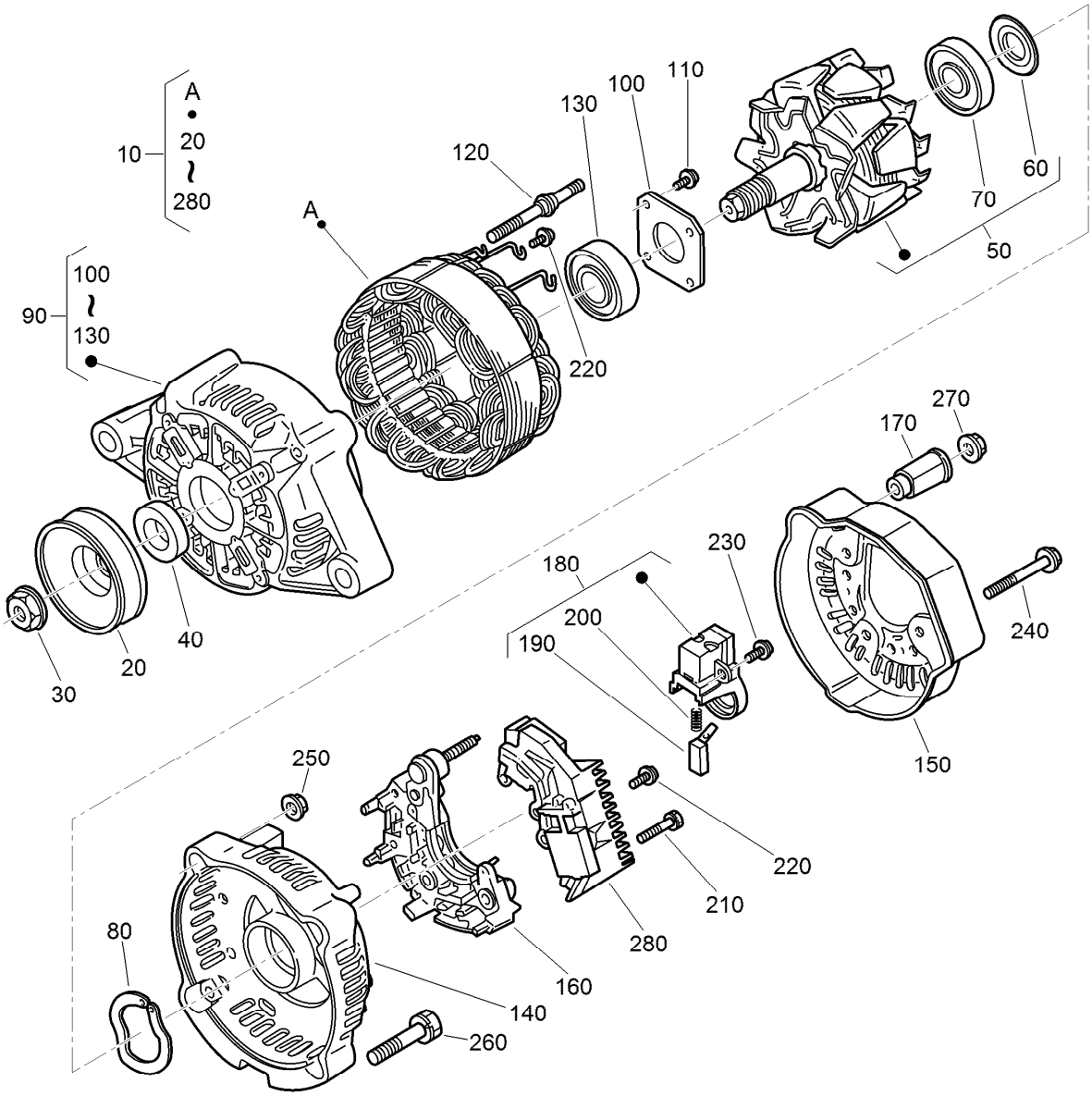


# Alternator Components Assembly

| Ref. | Part Number | Qty. | Description |
|---|---|---|---|
| 10 | 131-6557 | 1 | Alternator ASM |
| 20 | 98-9453 | 1 | Pulley-Dynamo |
| 30 | 98-7708 | 1 | Nut |
| 40 | 98-7709 | 1 | Collar |
| 50 | 107-0136 | 1 | Rotor ASM |
| 60 | 98-7711 | 1 | Cover-Bearing |
| 70 | 107-0138 | 1 | Bearing-Ball |
| 80 | 98-7713 | 1 | Washer-Thrust |
| 90 | 131-6559 | 1 | Frame-End, Drive |
| 100 | 98-7715 | 1 | Plate-Retainer |
| 110 | 98-7716 | 4 | Screw-Head, Round |
| 120 | 98-7717 | 2 | Bolt-Through |
| 130 | 133-2811 | 1 | Bearing |
| 140 | 107-9087 | 1 | Frame-End |

| Ref. | Part Number | Qty. | Description |
|---|---|---|---|
| 150 | 107-0140 | 1 | Cover-End |
| 160 | 127-1612 | 1 | Rectifier ASM |
| 170 | 98-7722 | 1 | Bushing-Insulation |
| 180 | 107-0141 | 1 | Brush Holder ASM |
| 190 | 98-7724 | 2 | Brush |
| 200 | 98-7725 | 2 | Spring-Brush |
| 210 | 98-7726 | 2 | Screw-Head, Round |
| 220 | 98-7727 | 6 | Screw-Head, Round |
| 230 | 98-7728 | 1 | Screw-Head, Round |
| 240 | 98-7729 | 3 | Bolt |
| 250 | 98-7730 | 2 | Nut |
| 260 | 98-7731 | 2 | Bolt |
| 270 | 98-7732 | 1 | Nut |
| 280 | 140-2458 | 1 | Regulator ASM |

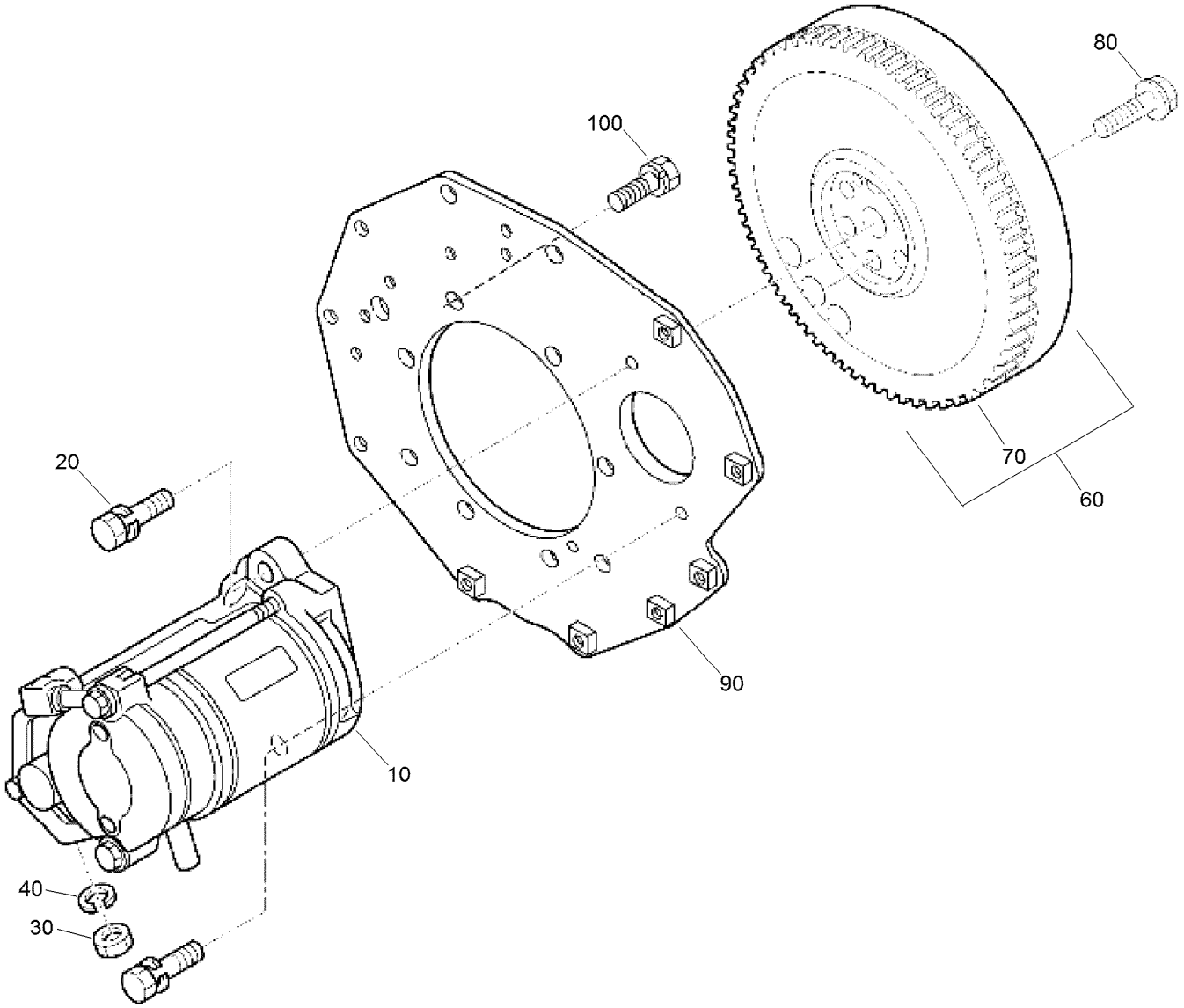


# Starter and Flywheel Assembly

| *Ref.* | *Part Number* | *Qty.* | *Description* |
|---|---|---|---|
| 10 | 98-9705 | 1 | Starter ASM |
| 20 | 98-7697 | 2 | Bolt |
| 30 | 98-7534 | 1 | Nut |
| 40 | 105-2893 | 1 | Washer-Spring |
| 60 | 105-3784 | 1 | Flywheel ASM |
| 70 | 115-3015 | 1 | Gear-Ring |
| 80 | 98-9537 | 6 | Bolt-Flywheel |
| 90 | 98-9486 | 1 | Plate-End, Rear |
| 100 | 98-9392 | 8 | Bolt |

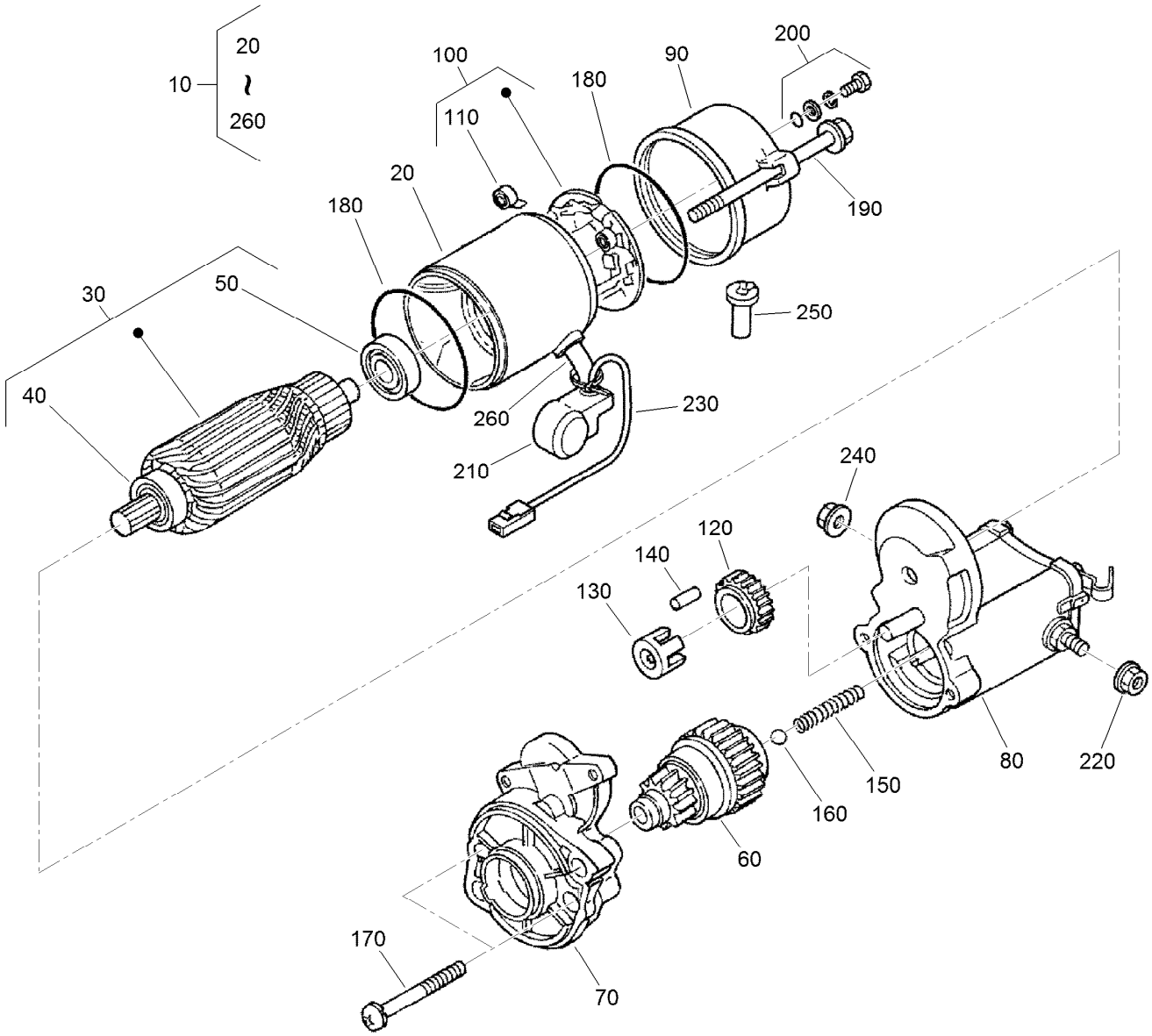


# Starter Component Assembly

| Ref. | Part Number | Qty. | Description |
|---|---|---|---|
| 10 | 98-9705 | 1 | Starter ASM |
| 20 | 104-8608 | 1 | Yoke ASM |
| 30 | 98-7742 | 1 | Armature ASM |
| 40 | 98-7744 | 1 | Bearing |
| 50 | 98-7743 | 1 | Bearing |
| 60 | 99-8373 | 1 | Clutch-Running, Over |
| 70 | 99-8374 | 1 | Frame-End, Drive |
| 80 | 105-3746 | 1 | Magnetic Switch ASM |
| 90 | 98-7748 | 1 | Frame-End |
| 100 | 98-7749 | 1 | Brush Holder ASM |
| 110 | 98-7750 | 4 | Spring-Brush |
| 120 | 98-7751 | 1 | Gear |
| 130 | 98-7752 | 1 | Retainer |

| Ref. | Part Number | Qty. | Description |
|---|---|---|---|
| 140 | 98-7753 | 5 | Roller |
| 150 | 98-7754 | 1 | Spring |
| 160 | 98-7755 | 1 | Ball |
| 170 | 98-7756 | 2 | Bolt |
| 180 | 98-7757 | 2 | O-Ring |
| 190 | 100-9240 | 2 | Bolt |
| 200 | 98-7758 | 2 | Bolt ASM |
| 210 | 99-8375 | 1 | Cover |
| 220 | 99-8371 | 1 | Nut-Hex |
| 230 | 98-9711 | 1 | Cord-Solenoid, Stop |
| 240 | 99-8376 | 1 | Nut-Hex |
| 250 | 98-7759 | 1 | Pipe-Drain |
| 260 | 98-9712 | 1 | Band-Cover |

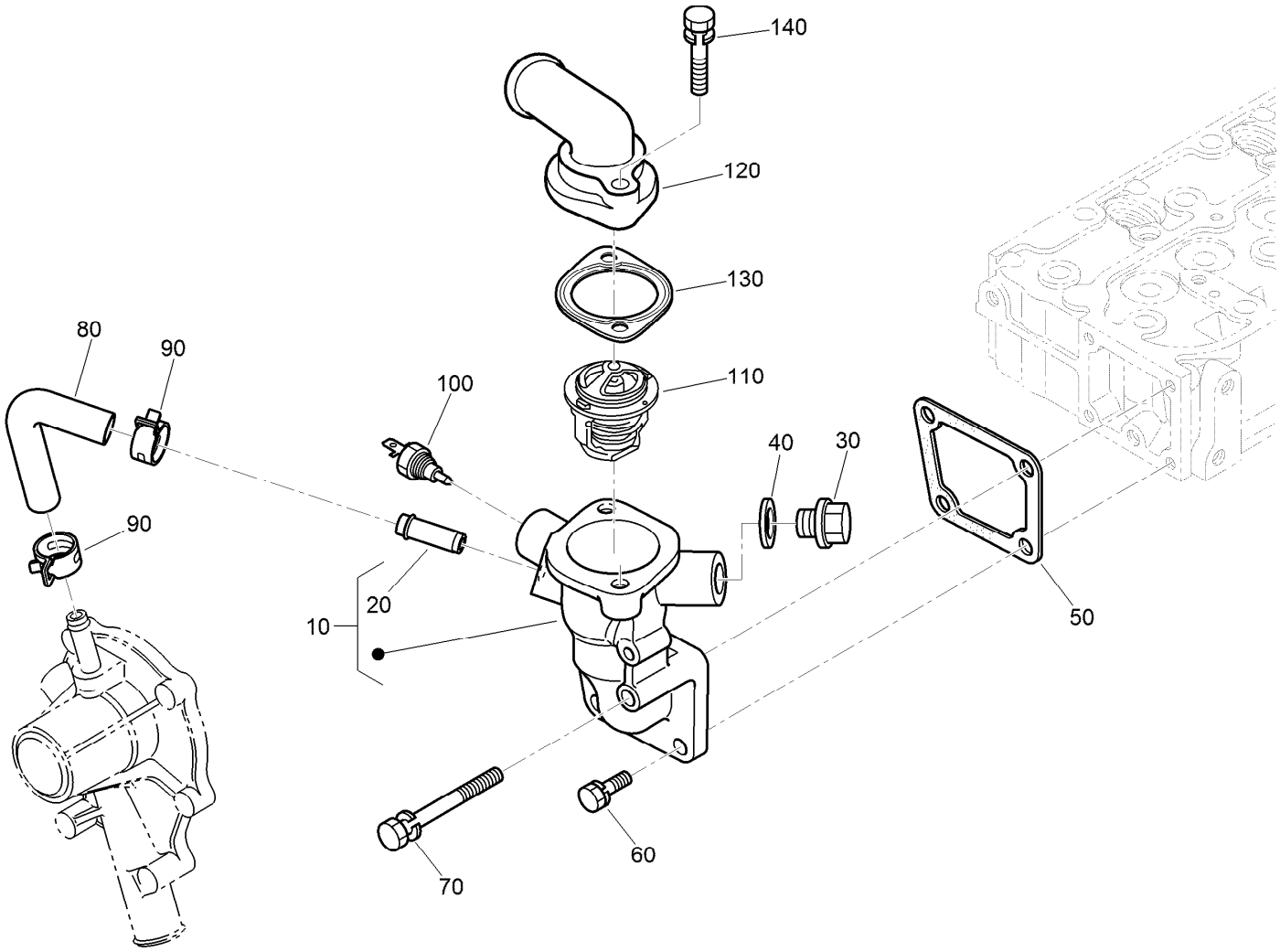


# Water Flange and Thermostat Assembly

| Ref. | Part Number | Qty. | Description |
|---|---|---|---|
| 10 | 98-9713 | 1 | Water Flange ASM |
| 20 | 98-9580 | 1 | Pipe-Return, Water |
| 30 | 105-3747 | 1 | Plug |
| 40 | 99-3583 | 1 | Gasket |
| 50 | 98-9638 | 1 | Gasket-Flange, Water |
| 60 | 98-7692 | 3 | Bolt |
| 70 | 98-9356 | 1 | Bolt |
| 80 | 98-9578 | 1 | Pipe-Return, Water |
| 90 | 125-9078 | 2 | Clamp-Hose |
| 100 | 98-9719 | 1 | Thermoswitch |
| 110 | 98-7778 | 1 | Thermostat ASM |
| 120 | 104-4804 | 1 | Outlet-Water |
| 130 | 105-3748 | 1 | Gasket-Thermostat |
| 140 | 98-7777 | 2 | Bolt |

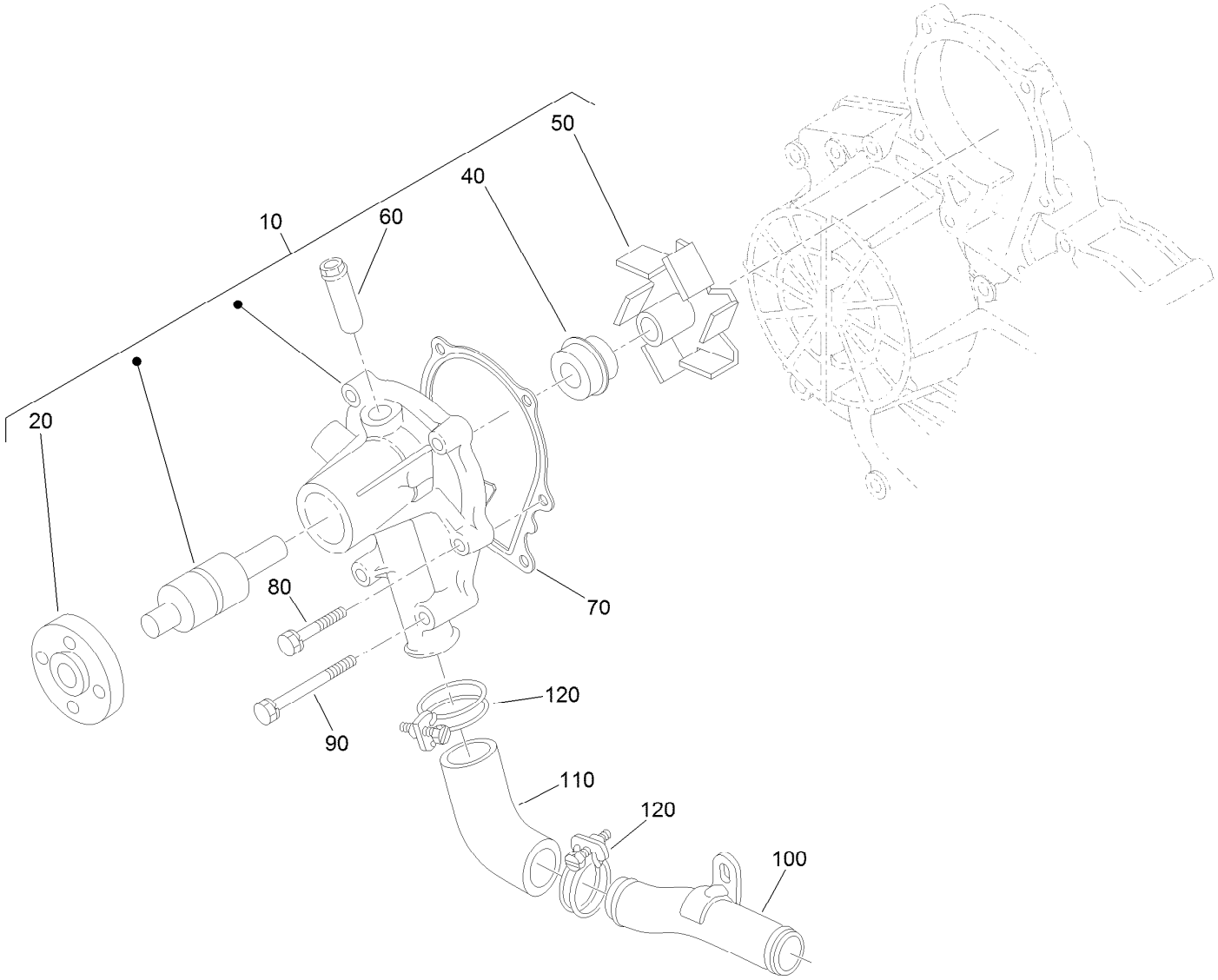


# Water Pump Assembly

| Ref. | Part Number | Qty. | Description |
|---|---|---|---|
| 10 | 107-9089 | 1 | Water Pump ASM |
| 20 | 99-3516 | 1 | Flange-Pump, Water |
| 40 | 105-3750 | 1 | Mechanical Seal ASM |
| 50 | 112-7017 | 1 | Impeller-Pump, Water |
| 60 | 100-1932 | 1 | Pipe-Return, Water |
| 70 | 99-3454 | 1 | Gasket-Pump, Water |
| 80 | 98-9353 | 4 | Bolt |
| 90 | 107-9090 | 2 | Bolt |
| 100 | 98-9716 | 1 | Pipe-Water |
| 110 | 107-9091 | 1 | Pipe-Water |
| 120 | 127-0439 | 2 | Clamp-Hose |

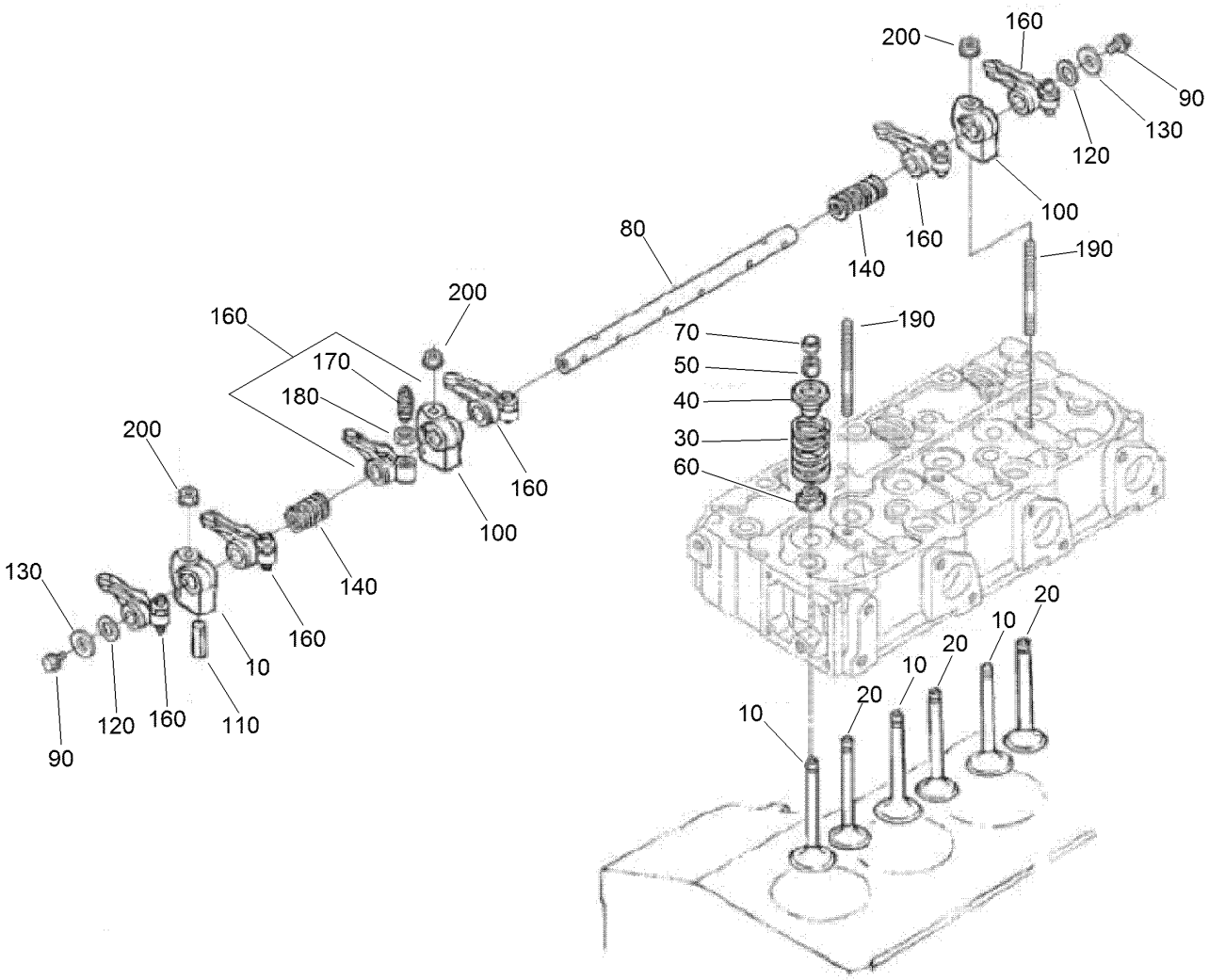


# Valve and Rocker Arm Assembly

| Ref. | Part Number | Qty. | Description |
|---|---|---|---|
| 10 | 140-2459 | 3 | Valve-Inlet |
| 20 | 140-2460 | 3 | Valve-Exhaust |
| 30 | 98-9648 | 6 | Spring-Valve |
| 40 | 107-9092 | 6 | Retainer-Spring |
| 50 | 117-7572 | 6 | Collet-Spring, Valve |
| 60 | 99-8385 | 6 | Seal-Stem, Valve |
| 70 | 98-9497 | 6 | Cap-Valve |
| 80 | 130-1248 | 1 | Shaft-Arm, Rocker |
| 90 | 99-8363 | 2 | Bolt-Flange |
| 100 | 98-9505 | 3 | Bracket-Arm, Rocker |

| Ref. | Part Number | Qty. | Description |
|---|---|---|---|
| 110 | 105-3758 | 1 | Pin-Spring |
| 120 | 98-9507 | 2 | Washer-Shaft, Rocker Arm |
| 130 | 110-3832 | 2 | Washer-Plain |
| 140 | 98-9504 | 2 | Spring-Arm, Rocker |
| 160 | 112-7020 | 6 | Rocker Arm ASM |
| 170 | 98-9502 | 6 | Screw-Adjusting |
| 180 | 98-9503 | 6 | Nut |
| 190 | 98-9506 | 3 | Stud |
| 200 | 131-6563 | 3 | Nut-Flange |

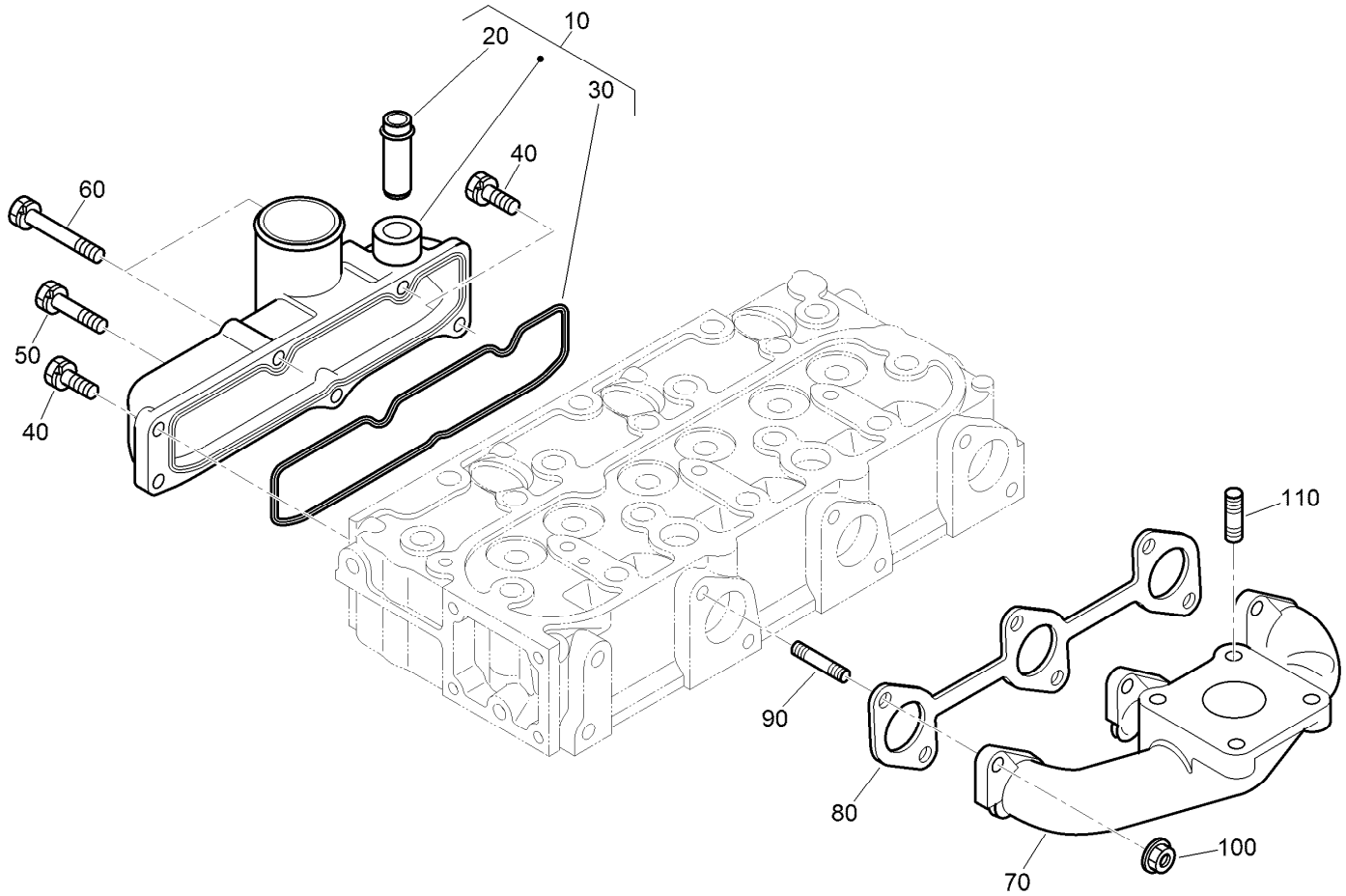


# Inlet and Exhaust Manifold Assembly

| *Ref.* | *Part Number* | *Qty.* | *Description* |
|---|---|---|---|
| 10 | 107-7843 | 1 | Manifold Inlet ASM |
| 20 | 98-9492 | 1 | Joint-Pipe, Breather |
| 30 | 98-9609 | 1 | Gasket-Manifold, Inlet |
| 40 | 127-0403 | 3 | Bolt-Flange |
| 50 | 98-9353 | 1 | Bolt |
| 60 | 125-9063 | 2 | Bolt-Sems |
| 70 | 107-9093 | 1 | Manifold-Exhaust |
| 80 | 99-8327 | 1 | Gasket-Manifold, Exhaust |
| 90 | 98-9588 | 6 | Stud |
| 100 | 98-9665 | 6 | Nut |
| 110 | 98-7769 | 4 | Stud |

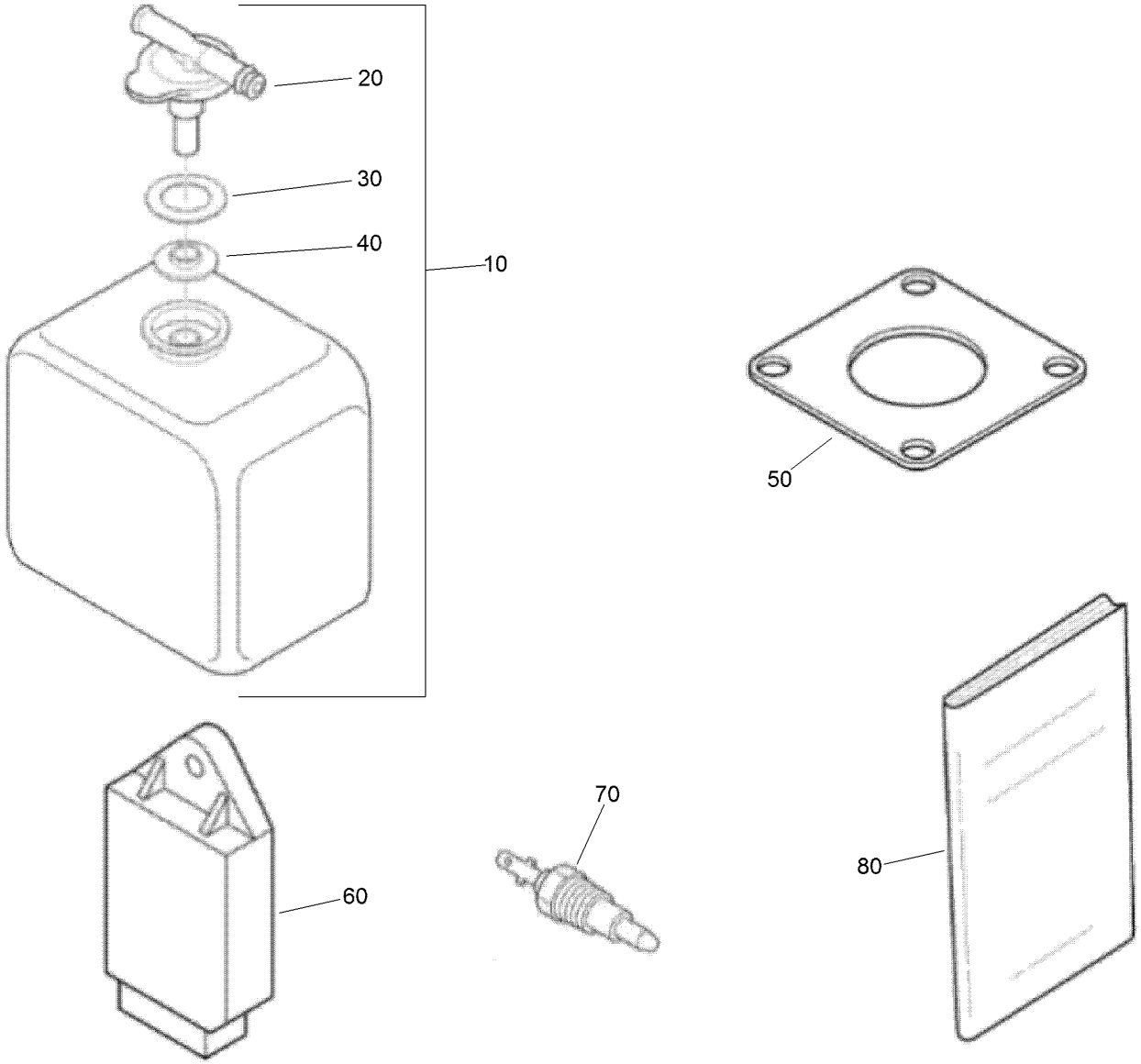


# Miscellaneous Engine Parts

| *Ref.* | *Part Number* | *Qty.* | *Description* |
|---|---|---|---|
| 10 | 104-9318 | 1 | Bottle-Overflow |
| 20 | 115-4132 | 1 | Cap |
| 30 | 105-3755 | 1 | Gasket |
| 40 | 105-3756 | 1 | Plate |
| 50 | 99-8343 | 1 | Gasket-Muffler |
| 60 | 140-2463 | 1 | Controller-Glow |
| 70 | 140-2462 | 1 | Thermoswitch |
| 80 | 140-2461 | 1 | Manual-Operator |

# Attachments and Accessories

## For 30807 Groundsmaster 3500-D Rotary Mower

| Product Name | Model/Part |
|---|---|
| Roller Scraper Kit | 104-5168 |
| Blade-High Lift | 104-5183 |
| Blade-Angle Sail | 105-9810-03 |
| Blade-Atomic | 107-0235-03 |
| 27in Blade Service Pack (qty 6) | 108-1462 |
| Blade-27in Combo | 108-9026 |
| LH Short Liftarm Assembly | 115-3465 |
| RH Short Liftarm Assembly | 115-3466 |
| Wireless Hourmeter | 115-4754 |
| External Antenna Kit, Wireless Hourmeter System | 115-9524 |
| Base Station Kit, Wireless Hourmeter System | 115-9542 |
| Repeater Kit, Wireless Hourmeter System | 115-9543 |
| Roller Asm (UHMW) | 131-7800 |
| Hi-Back Seat Cover | 133-1308 |
| PX Hydraulic Fluid (5 Gal) | 133-8086 |
| PX Hydraulic Fluid (55 Gal) | 133-8087 |
| Ballast Kit (27in C/U) | 136-2881 |
| Wheel Weight Kit | 136-3315 |
| High HOC Turf Evaluator | 136-3635 |
| 3in Dia, 27in Sectional Roller Assembly | 137-6145 |
| Bimini Sunshade for 2-Post Roll-Over Protection System | 30358 |
| Premium Seat Kit | 30629 |
| White Universal Sunshade | 30669 |
| Red Universal Sunshade | 30671 |
| 27in Rotary Cutting Unit | 30834 |
| Leaf Mulching Kit | 30836 |
| LED Light Kit | 31696 |
| New Red Paint - Gallon | 361-11 |
| Dark Metallic Gray Aerosol Paint | 361-12 |
| Semi-Gloss Black Spray Paint | 361-9 |
| 1000 Hour MVP Kit | 44963 |
| Air Dry Red Paint - Qt | 5340 |

TORO®

Count on it.