Form No. 3314-933 Rev B

TORO®

Count on it.

Parts Catalog

CCR™ Powerlite®

Snowthrower

Model No. 38170—Serial No. 2000001 and Up

Model No. 38175—Serial No. 2000001 and Up

Register at www.Toro.com.
Original Instructions (EN)

3314-933 B

Ordering Replacement Parts

To order replacement parts, please supply the part number, the quantity, and the description of each part desired.

Understanding Reference Numbers

Each identified part in an illustration has a reference number. The reference number for a part also appears in the parts list, along with other information about the part.

This catalog uses two special reference number formats, one to indicate parts in a service assembly and another to indicate the quantity of a given part in an illustration.

Service Assembly Reference Numbers

Parts in service assemblies have reference numbers in the form a:b. The a represents the reference number of the entire service assembly and the b represents a sequential number unique to each part within the service assembly.

For example, a wheel assembly might be identified by reference number 6, the tire by 6:1, the valve by 6:2, and the wheel by 6:3. When you order the assembly identified by reference number 6, you receive all parts identified by reference numbers 6:1,6:2, and 6:3. However, you may also order any part individually. Reference numbers of this type appear in illustration and in parts lists.

Reference Numbers Indicating Quantity

In an illustration, if a reference number indicates more than one part, the reference number has the form nX y. The n represents the quantity of the part, the X is the multiplication symbol, and the y represents the reference number.

For example, in an illustration, the reference number 2X 37 means that two of the parts identified by reference number 37 are indicated.

Contents

Chute Assembly 4
Engine and Wheel Assembly 5
Pulley and Belt Cover Assembly 6
Auger Assembly 7
Handle Assembly 8
Starter Motor Assembly (model No. 38175 Only) 9
Engine Tecumseh Model No. Hsk600 Type 1668p (model No. 38170 Only) 10
Carburetor No. 632552 12
Recoil Starter No. 590537 13

© 2024—The Toro® Company
8111 Lyndale Avenue South
Bloomington, MN 55420

Contact us at www.Toro.com.
Printed in the USA.
All Rights Reserved

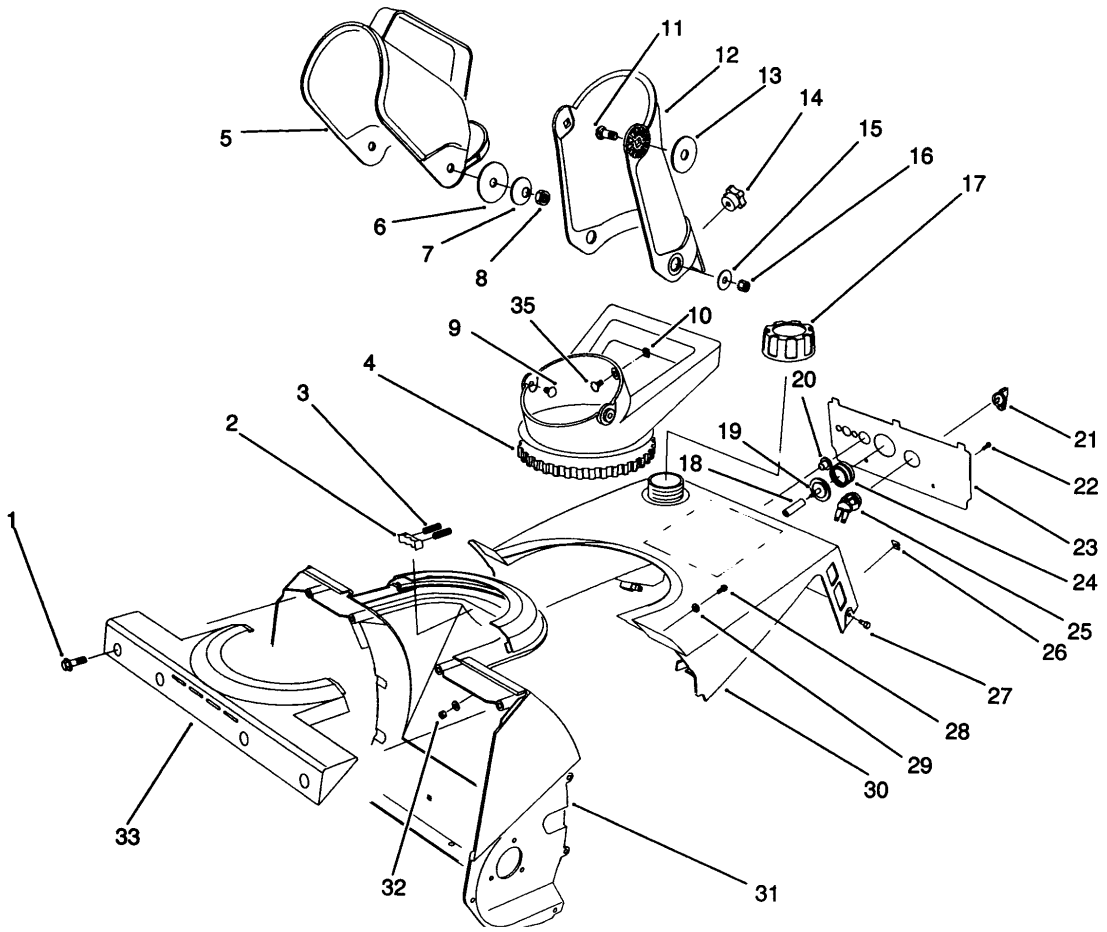

Chute Assembly

Ref.	Part Number	Qty.	Description
1	46-8094	4	Screw-Plastic
2	75-9160	1	Detent-Chute
3	75-9170	2	Spring-Compression
4	75-8670	1	Handle-Chute
5	75-8770	1	Deflector-Chute
6	3256-68	2	Washer-Flat
7	3290-340	2	Washer-Belleville
8	3296-29	2	Nut-Lock, NI
9	321-3	2	Screw-HH
10	32115-15	3	Nut-Push
11	3230-2	2	Bolt-CARR
12	75-8760	1	Chute
13	80-0640	2	Washer-Rubber
14	233-67	1	Knob-Chute
15	3256-81	2	Washer-Flat
16	3296-56	2	Nut-Lock, NI
17	55-3573	1	Cap-Fuel ASM
18	44-3173	1	Hose-Primer
19	44-2750	1	Body-Primer
20	23-7470	1	Guide-Rope, Starter
21	63-8360	1	Key-Ignition
22	32144-53	2	Screw-SHWH, Thread Forming
23	75-9140	1	Cntrl Pnl/Silk Scrn
	75-9150	1	Panel-Control (Model No. 38175 Only)
24	66-7460	1	Bulb-Primer
25	40-5940	1	Switch
26	49-1490	2	Nut
27	32144-89	2	Screw-Thread Forming
28	3250-32	2	Screw-PPH
29	3256-1	4	Washer-Flat
30	75-8800	1	Shroud-Upper
3	75-8801	1	Shroud-Upper (Model 38175)
31	75-8660	1	Housing
32	3296-42	2	Nut-Lock, NI
33	75-8650	1	Retainer-Chute
34	80-0680	1	Decal - Powerlite Rec.
	80-0690	1	Decal - Powerlite El.
35	3229-11	1	Screw-CARR

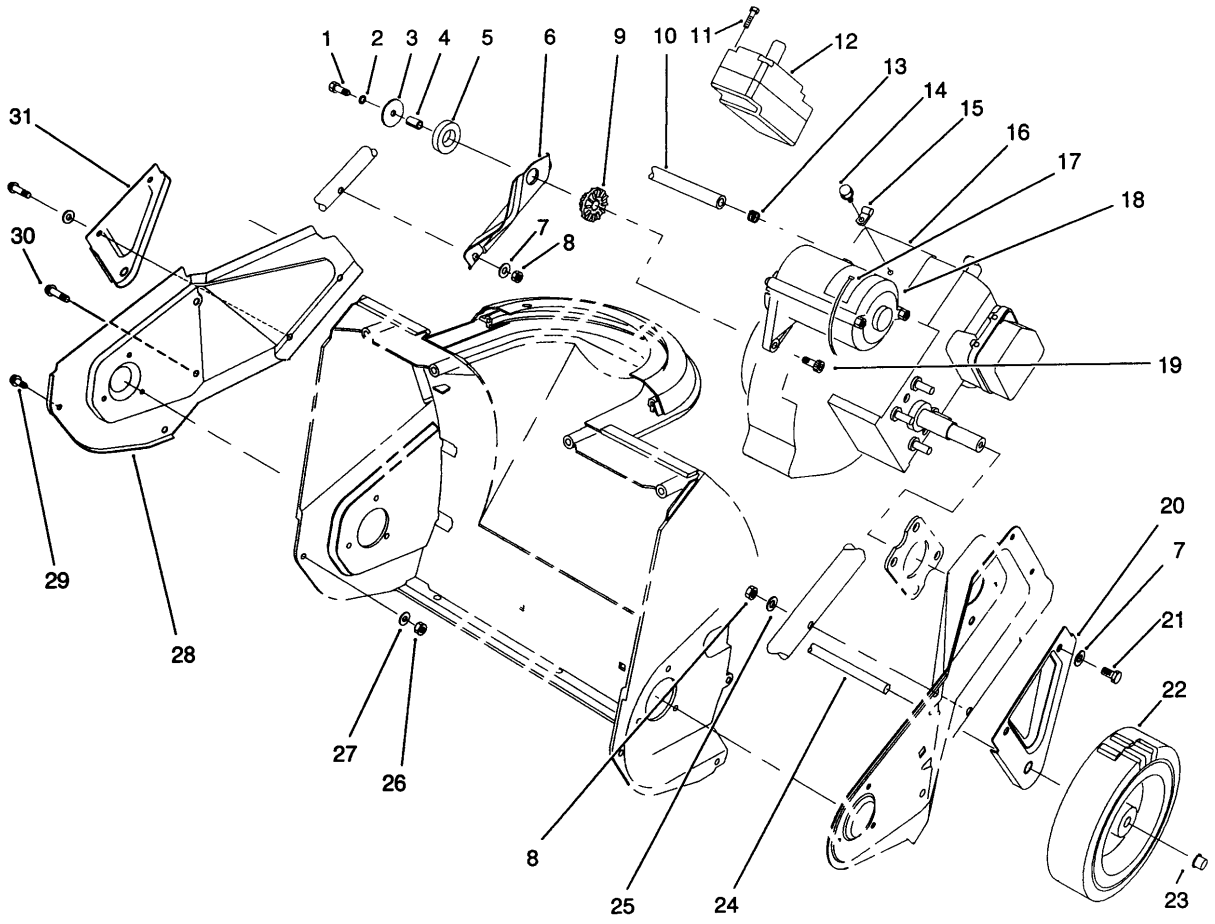

Engine and Wheel Assembly

Ref.	Part Number	Qty.	Description
1	321-6	1	Screw-HH
2	3253-3	1	Washer-Lock
3	3256-58	1	Washer-Flat
4	80-0650	1	Spacer-Tubular
5	80-0620	1	Ring-Isolator
6	75-8980	1	Support-Engine
7	3256-1	6	Washer-Flat
8	3296-42	4	Nut-Lock, NI
9	75-9100	1	Bushing-Isolator
10	49-2483	1	Line-Gas
11	32144-27	2	Screw-Plastite
12		1	Motor Switch Housing Ass-Y (Model No. 38175 Only) ●
13	2412-86	2	Clamp
14	32144-10	1	Screw-HWH
15	2412-91	1	Clamp
16		1	Engine (Hsk 600-1668P) (Model No. 38170) ●

Ref.	Part Number	Qty.	Description
16		1	Engine (Hsk 600-1669P) (Model No. 38175) ●
17	250-7	1	Tie-Cable
18	80-4700	1	Starter Motor Assembly
19	3274-88	2	Screw-Thread Forming
20	75-8910	1	Bracket-Wheel
21	321-10	4	Screw-HH
22	23-3250	2	Wheel
23	3290-320	2	Nut-Push
24	27-0062	1	Axle
25	3-7501	2	Washer
26	3296-2	1	Nut-Lock, NI
27	3256-14	1	Washer-Flat
28	75-8820	1	Sideplate-RH
29	32105-23	1	Screw
30	46-8094	3	Screw-Plastic
31	75-8900	1	Bracket-Wheel

● Not serviced separately

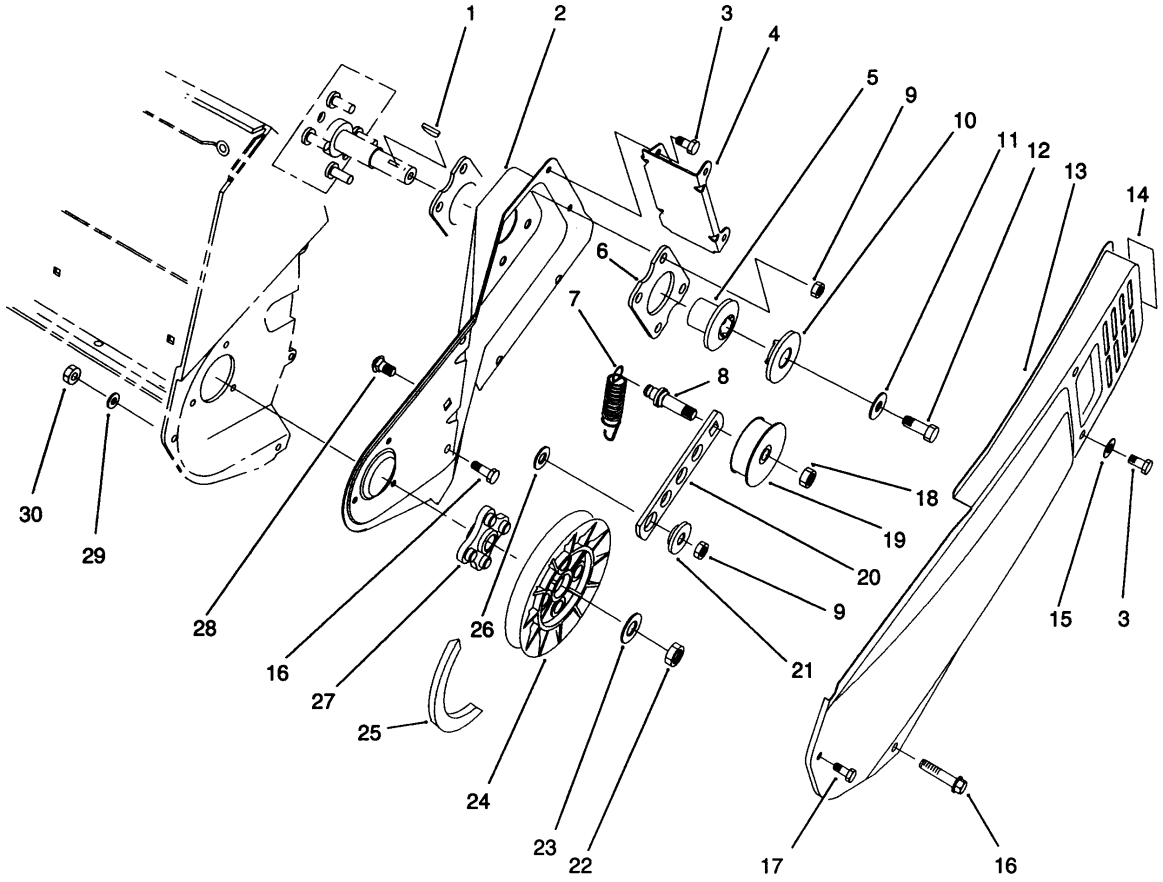

Pulley and Belt Cover Assembly

Ref.	*Part Number*	*Qty.*	*Description*
1	3257-3	1	Key-Woodruff
2	75-8810	1	Sideplate-LH
3	32144-4	4	Screw-HWH
4	75-8870	1	Bracket-Cover
5	71-5050	1	Hub-Half Sheave
6	71-5290	2	Plate Engine
7	75-9020	1	Spring-Extension
8	75-8720	1	Pin-Idler
9	3296-29	5	Nut-Lock, NI
10	71-5060	1	Cap-Half Sheave
11	3256-71	1	Washer-Flat
12	3235-6	1	Screw-HH
13	75-8830	1	Cover-Belt
14	80-0630	1	Decal
15	3256-1	2	Washer-Flat

Ref.	*Part Number*	*Qty.*	*Description*
16	46-8094	3	Screw-Plastic
17	32105-23	1	Screw
18	3296-59	1	Nut-Lock, NI
19	71-5260	1	Pulley-Idler
20	75-9050	1	Arm-Idler
21	75-8700	1	Bushing-Idler
22	3296-38	1	Nut-Lock, NI
23	3256-25	1	Washer-Flat
24	75-8750	1	Pulley-Driven
25	75-9010	1	V-Belt
26	25-5640	1	Washer
27	75-8740	1	Hub
28	3230-23	1	Bolt-CARR
29	3256-14	1	Washer-Flat
30	3296-2	1	Nut-Lock, NI

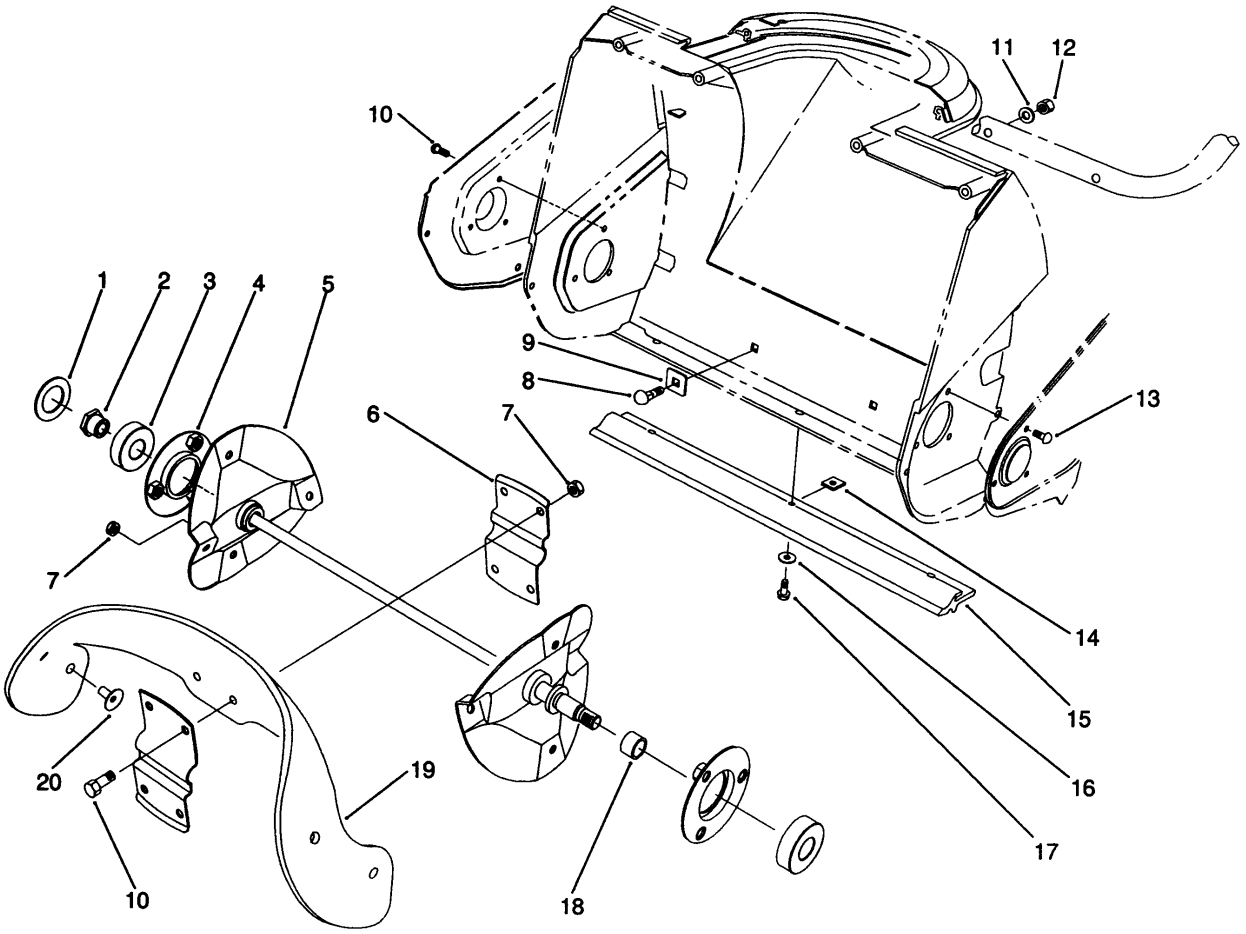

Auger Assembly

Ref.	*Part Number*	*Qty.*	*Description*
1	75-9180	1	Washer-Rubber
2	75-8690	1	Nut
3	38-7820	2	Bearing-Ball
4	75-9080	2	Flange Bearing ASM
5	75-8840	1	Rotor
6	75-8880	2	Support-Rotor
7	3296-56	12	Nut-Lock, NI
8	3229-5	2	Screw-CARR
9	75-9040	2	Washer-Square
10	3234-33	7	Screw-HHF
11	3-7501	2	Washer
12	3296-42	2	Nut-Lock, NI
13	321-3	3	Screw-HH
14	32115-13	3	"u" Type Speed Nut
15	75-8780	1	Scraper
16	3256-14	3	Washer-Flat
17	32144-34	3	Screw-HWHTF
18	75-8710	1	Spacer
19	80-0660	1	Blade-Rotor
	84-1980	2	Blade-Rotor
20	84-1970	8	Screw

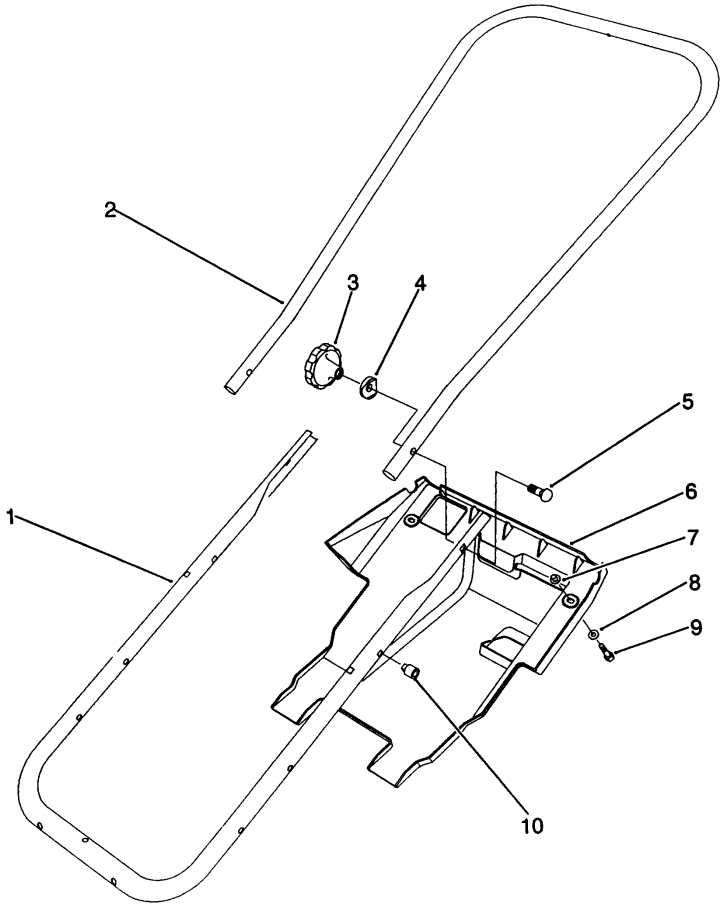

Handle Assembly

Ref.	*Part Number*	*Qty.*	*Description*
1	75-9060	1	Tube-Frame
2	75-9070	1	Handle-Upper
3	19-4050	2	Knob
4	75-9130	2	Washer-Curved
5	17-9426	2	Screw-Handle
6	75-8790	1	Shroud
7	3290-453	2	Nut-Push
8	3256-14	2	Washer-Flat
9	32144-34	2	Screw-HWHTF
10	32115-17	2	Nut-Expansion

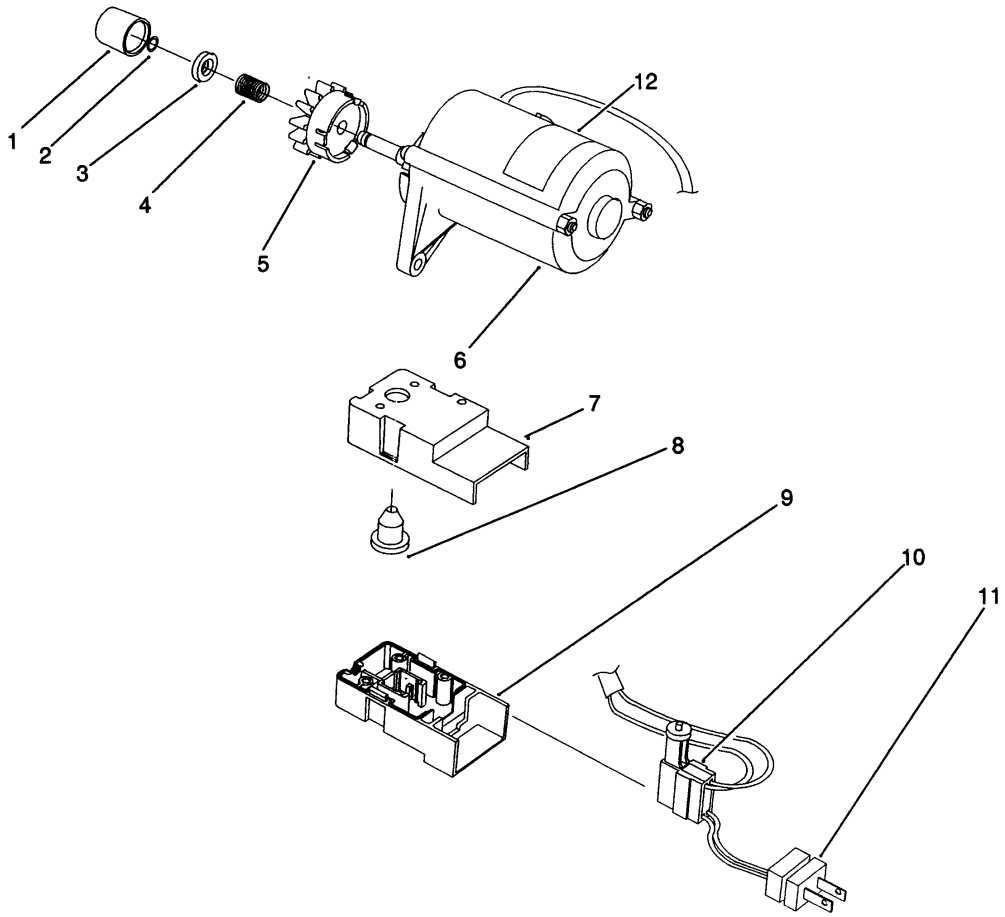

Starter Motor Assembly (model No. 38175 Only)

Ref.	*Part Number*	*Qty.*	*Description*
1	70-7890	1	Cap-Pinion
2	61-4680	1	Ring-Lock
3	61-4670	1	Pinion Stop
4	61-4690	1	Spring
5	80-4710	1	Pinion Assembly
6	80-4700	1	Starter Motor Assembly
7	80-3740	1	Cap-Switch Housing
8	36-8350	1	Boot-Switch
9	80-3730	1	*obs* Base X
10	36-8340	1	Switch-Starter
11	36-8370	1	Plug
12		1	Decal-Ul
	28-9170	1	Cord

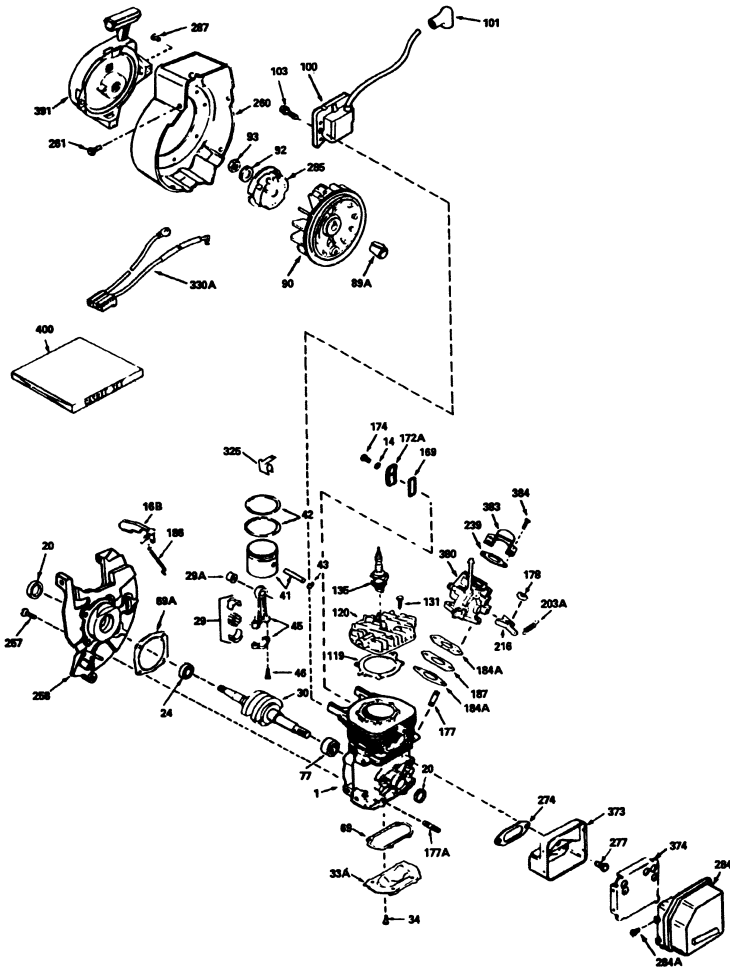

Engine Tecumseh Model No. Hsk600 Type 1668p (model No. 38170 Only)

Ref.	Part Number	Qty.	Description
1		1	Block Ass-Y-Cylinder (Order Short Block If Replacement Is Required)
14	650838	1	Washer
16B	490291A	1	Vane-Air
20	510319	2	Seal-Oil
24	530110	1	Bearing-Ball
29	530150	1	Needle Bearing And Liner Set (37 Needles)
29A	530104A	1	Bearing-Cartridge
30	290602	1	Crankshaft
33A	570644	1	Plate-Cover
34	650579	4	Screw (T-25, 10-24 X 1/2)
41	310283A	1	Piston & Pin Ass-Y (Incl. Ref. #43)
42	310190	1	Ring Set
43	310167	2	Ring-Retaning
45	310235B	1	Rod Ass-Y-Connecting (Incl. Ref. #29, 29A, & 46)
46	650633	2	Bolt-Rod, Connecting
69	510323A	1	Gasket-Plate, Cover
69A	510292A	1	Gasket-Cover, Cylinder
77	530105	1	Bearing-Cartridge
89A	611032	1	Blade (20 Inch)
90	611112	1	Flywheel
92	650815	1	Washer-Belleville

Ref.	Part Number	Qty.	Description
93	650390	1	Nut-Flywheel
100	34443A	1	Solid State
101	610118	1	Cover-Spark Plug
103	650814	2	Screw
119	510274A	1	Gasket-Head, Cylinder
120	250240A	1	Head-Cylinder
131	650477	5	Screw (T-30, 1/4-20 X 3/4)
135	611049	1	Spark Plug-Resistor (R C J 8Y)
169	510325A	1	Cover-Compression, Release
172A	570647	1	Comp. Release Cover
174	650579	1	Screw (T-25, 10-24 X 1/2)
177	650527	2	Stud
177A	650796	4	Stud
178	650457	1	Locknut
184A	510326A	2	Gasket-Carburetor
186	490294	1	Link-Governor
187	570438A	1	Spacer
203A	570646	1	Spring-Governor
216	570645	1	Lever-Adjusting, Rpm
239	35815	1	Gasket-Cleaner, Air
257	650911	4	Screw (T-30, 1/4-20 X 5/8)
258	350396	1	Base Ass-Y-Blower Housing (Incl Ref. #20)
260	350397	1	Housing-Blower

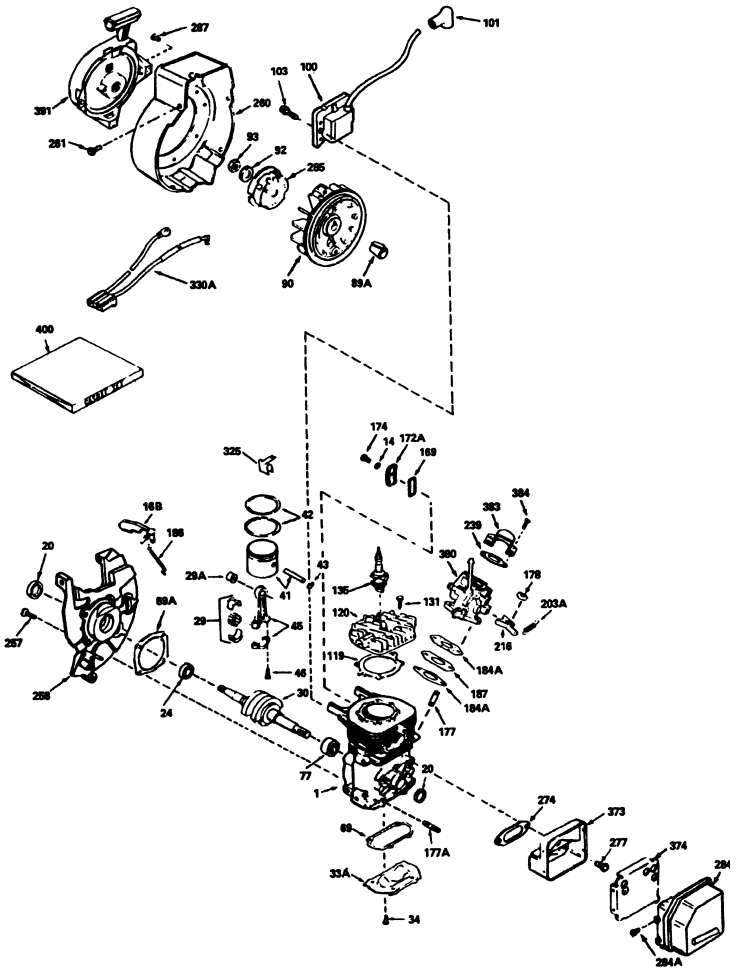

Engine Tecumseh Model No. Hsk600 Type 1668p (model No. 38170 Only) (continued)

Ref.	Part Number	Qty.	Description
261	650737	4	Screw (1/4-20 X 1/2)
274	510207A	1	Gasket-Exhaust
277	650911	3	Screw (T-30, 1/4-20 X 5/8)
284A	390324	1	Cover-Muffler
284	650578	1	Screw
285	590551	1	Cup-Starter
287		4	Rivet-Pop
325	29443	1	Clip-Wire
330A	611153	1	Harness-Wire
373	390292	1	Base-Muffler
374	390272	1	Baffle-Muffler
380	632552	1	Carburetor (Incl. Ref. #184A)
383	570434	1	Baffle-Carburetor
384	650229	2	Screw
391	590537	1	Starter-Rewind
400	510324B	1	Gasket Set
90	611066	1	Flywheel
177	650796	4	Stud
184	510326A	2	Gasket-Carburetor
203	570646	1	Spring-Governor
258	350422	1	Base Ass-Y-Blower Housing (Incl Ref. #20)
260	350423	1	Housing-Blower
284	390324	1	Cover-Muffler
330	611153	1	Harness-Wire

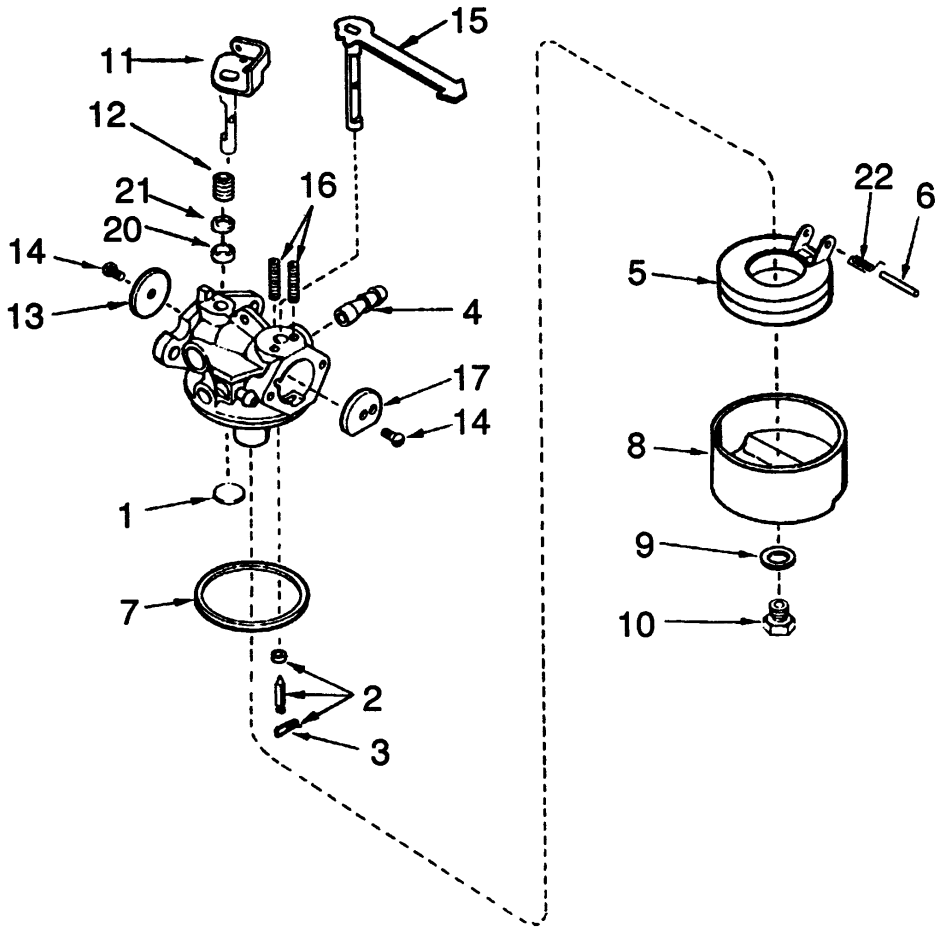

Carburetor No. 632552

Ref.	*Part Number*	*Qty.*	*Description*
1	631027	1	Plug-Welch, Atmospheric Vent
2	631021	1	Inlet Needle, Seat & Clip (Incl. Ref. #3)
3	631022	1	Clip-Spring
4	632164	1	Fitting-Fuel
5	632019	1	Float
6	631024	1	Shaft-Float
7	631028	1	O Ring-Bowl, Float
8	631700	1	Bowl Float
9	631334	1	Gasket-Bowl
10	632385	1	Nut-Float Bowl
11	632130	1	Shaft/Lever-Throttle
12	632169	1	Spring-Trottle, Return
13	631621	1	Shutter-Throttle
14	650506	2	Screw-Shutter
15	632553	1	Choke Shaft And Lever ASM
16	630735	1	Spring-Positioning, Choke
17	631815	1	Shutter-Choke
20	631183	1	Seal-Dust
21	631184	1	Washer-Seal, Dust
22	632386	1	Spring-Float, Dampening

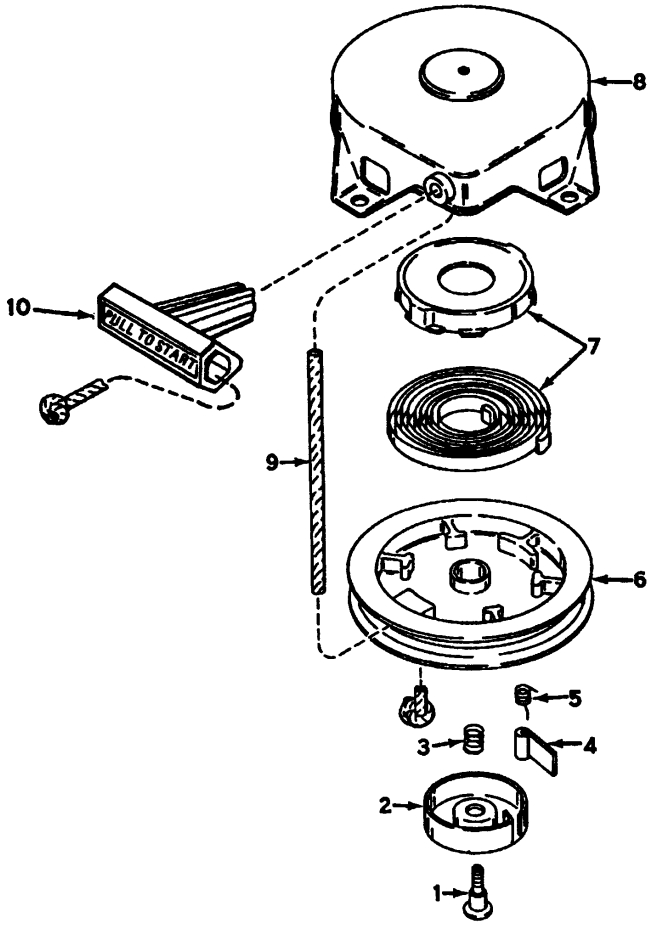

Recoil Starter No. 590537

Ref.	*Part Number*	*Qty.*	*Description*
1	590409A	1	Screw
2	590410	1	Retainer
3	590411	1	Spring-Brake
4	590148	1	Dog-Starter
5	590412	1	Spring-Dog
6	590413A	1	Pulley
7	590414	1	Spring & Keeper Assy
8	590536	1	Housing-Starter
9	590535	1	Rope-Starter (98 Cut To Length)
10	590452	1	Handle-Starter

Notes:

Notes:



Count on it.