FORM NO. 3311-972

TORO®

Model No. 16870 — 2000001 & UP

PARTS CATALOG

21" S.P. FINGERTIP START TORO STANDARD SIDE DISCHARGE

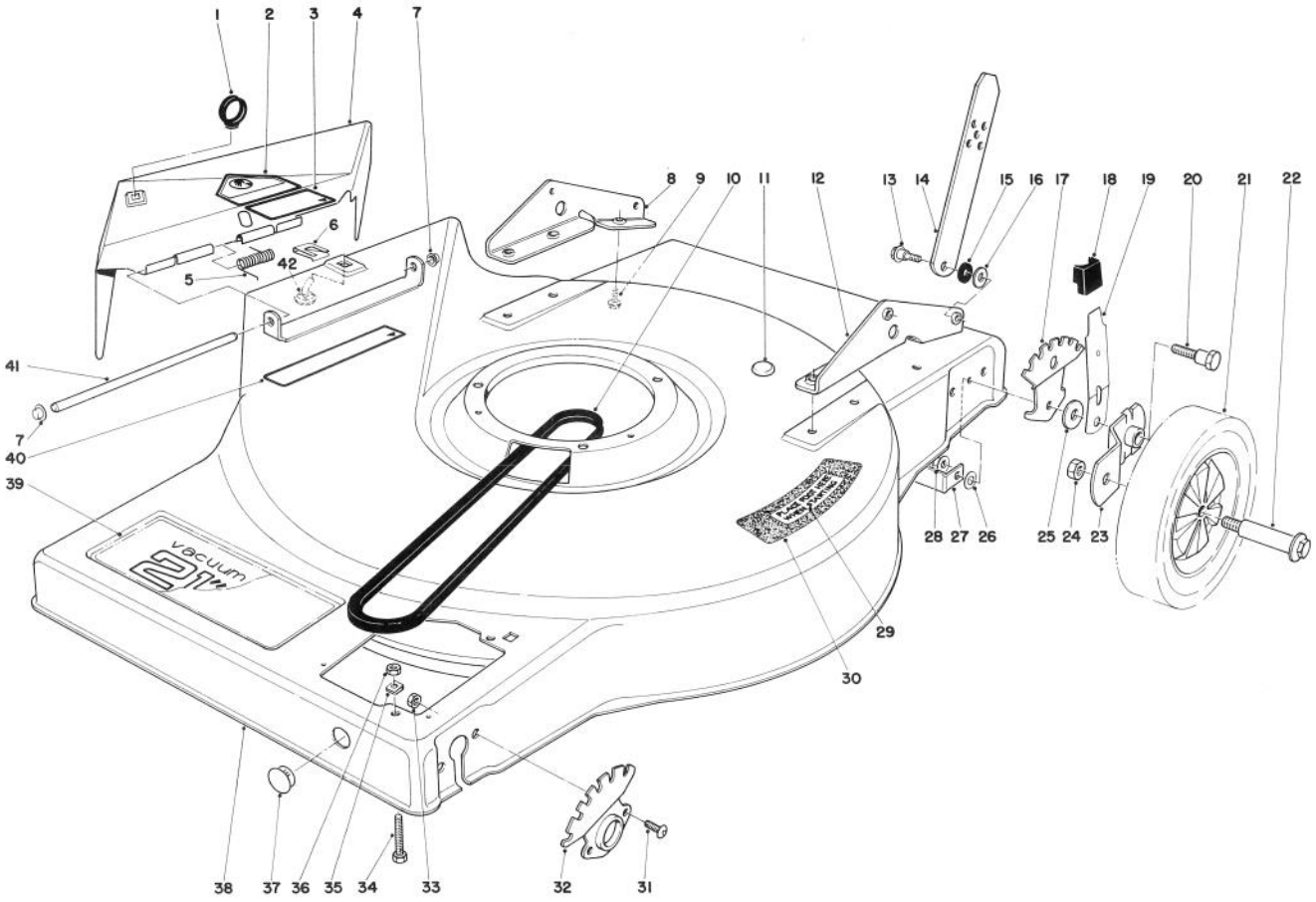

MOWER HOUSING ASSEMBLY

Ref. No.	Part No.	Description	No. Used
1	28-1430	Lift Loop — Deflector	1
2	39-5770	Decal — Danger	1
3	39-9130	Decal — Deflector Cover	1
4	8-8539	Deflector (Incl. Ref. #2 & 3)	1
5	28-1560	Spring — Torsion	1
6	28-3250	Clip — Bag Chute Pin	1
7	32112-1	Push Nut	2
8	36-6320	Bracket — Handle R.H.	1
9	32144-11	Hex Head Thread Forming Screw	6
10	36-8070	V-Belt	1
11	2410-54	Plug	1
12	36-6310	Bracket — L.H.	1
13	5-2490	Shoulder Screw	2
14	38-5090	Handle Latch	2

Ref. No.	Part No.	Description	No. Used
15	3-3287	Spacer — Handle Latch	2
16	3256-23	Washer	2
17	36-6780	Quadrant	2
18	25-7740	Knob — Arm	2
19	25-8000	Spring — Arm	2
20	36-6670	Pivot Screw	2
21	34-0390	Wheel & Tire Assembly	2
22	27-6230	Wheel Bolt	2
23	24-7710	Pivot Arm "A"	1
*	23-9120	Pivot Arm "B"	1
24	32146-6	Locknut	2
25	33-0390	Pivot Washer	2
26	5-1350	Washer	2
27	36-6830	Support Deck	1
28	32128-30	Locknut Flange	2

*Not Illustrated

COPYRIGHT © ALL RIGHTS RESERVED
The Toro Company — 1982
MINNEAPOLIS, MN 55420 — U.S.A.

PRICE $1.00

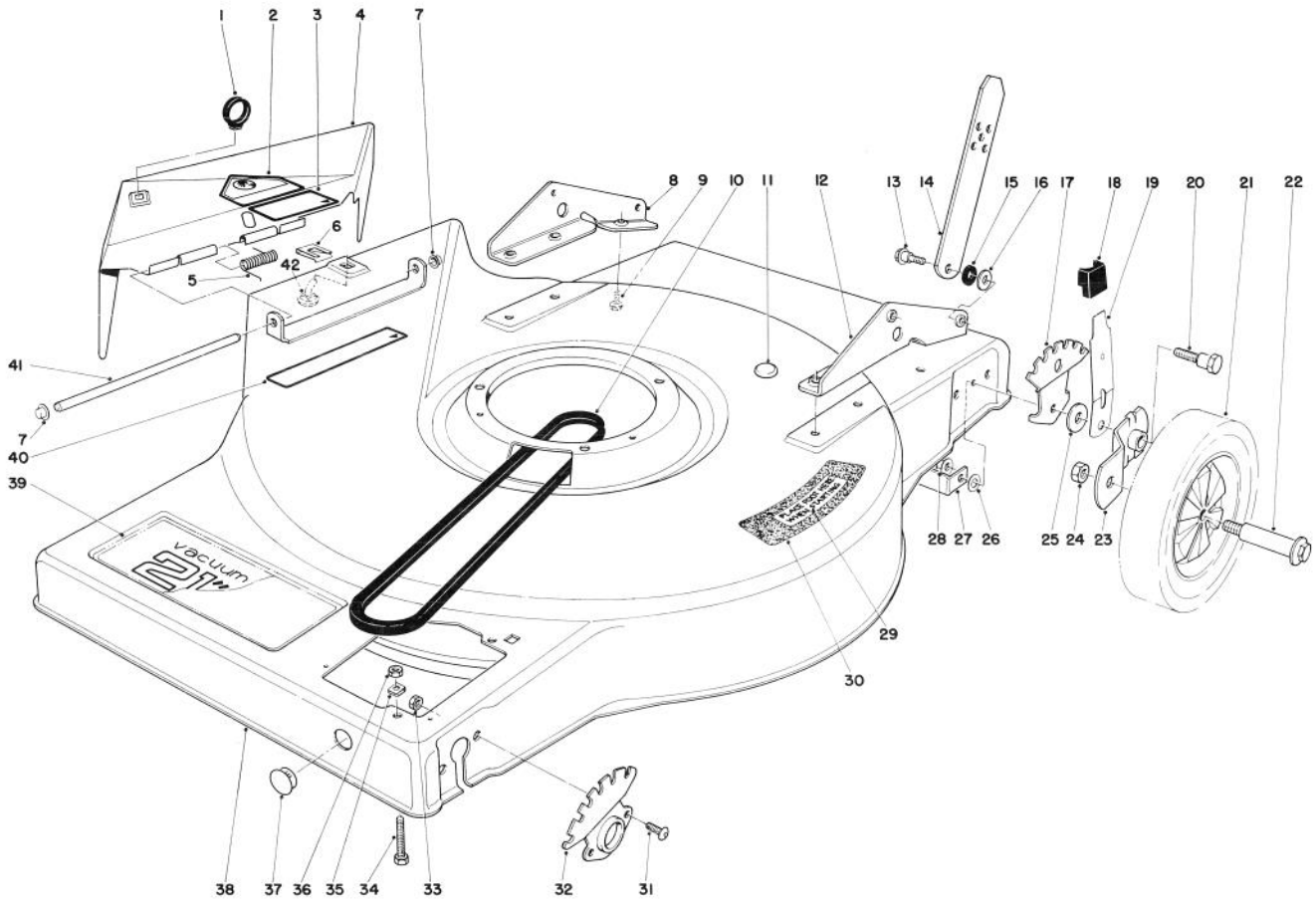

MOWER HOUSING ASSEMBLY (Continued)

Ref. No.	Part No.	Description	No. Used
29	36-2820	Decal – Step Pad	1
30	37-0030	Step Pad	1
31	3274-44	Capscrew – Button Head	4
32	36-7930	Quadrant	2
33	32152-1	Locknut	4
34	3-7281	Screw	1
35	37-7370	Speed Nut	1
36	3218-1	Jam Nut	1

Ref. No.	Part No.	Description	No. Used
37	2410-52	Hole Plug	1
38	8-7779	Housing	1
39	39-9110	Decal – Deck	1
40	39-9120	Decal – Caution	1
41	36-6350	Pivot Rod – Deflector	1
42	28-3260	Pin – Bag Chute	1
*	8-9959	Loose Parts Bag	1

*Not Illustrated

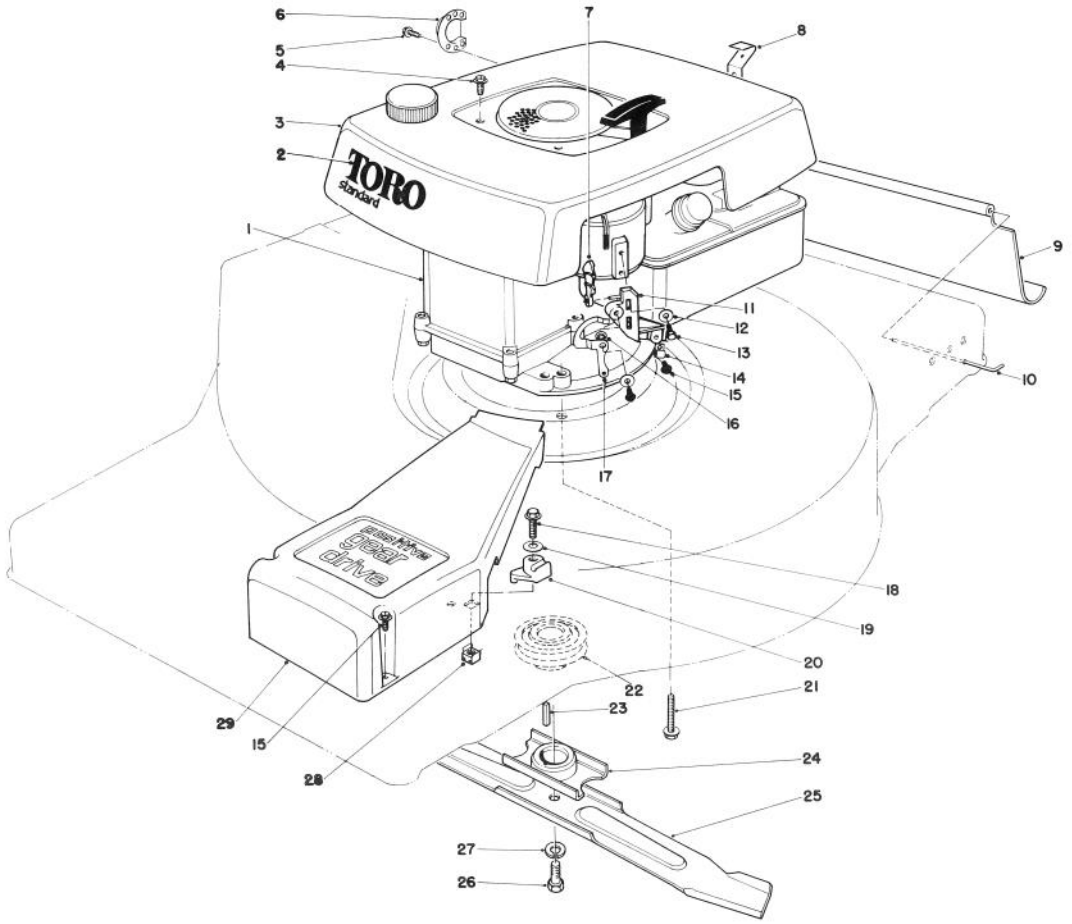

ENGINE ASSEMBLY

Ref. No.	Part No.	Description	No. Used
1	221-647	Engine	1
2	39-9050	Decal – Shroud	1
3	28-6772	Shroud	1
4	32104-94	Screw	4
5	2210-173	Screw	2
6	2210-184	Muffler Deflector	1
7	25-0350	Lever – Interlock	1
8	38-7580	Bracket Control	1
9	36-6330	Rear Shield	1
10	33-3204	Rod Shield	1
11	27-9280	Block – Cable & Pivot	1
12	3256-14	Washer	3
13	32144-19	Hex Head Screw	2
14	2412-63	Casing Clamp	1
15	32104-76	Screw Self Tapping	4

Ref. No.	Part No.	Description	No. Used
16	25-0520	Bushing – Cam Interlock	1
17	25-8150	Cam – Interlock	1
18	32144-22	Screw – Thread Forming	1
19	3256-22	Washer	1
20	38-6400	Cable Boss	1
21	11-0590	Capscrew – Hex Head Thread Forming	3
22	21-5580	Driver Pulley	1
23	27-8590	Square Key	1
24	20-2750	Blade Retainer	1
25	20-2720	Blade	1
26	3-5246	Screw – Special	1
27	3253-22	Lockwasher	1
28	32115-2	Nut – Retainer	1
29	39-5581	Belt Cover	1

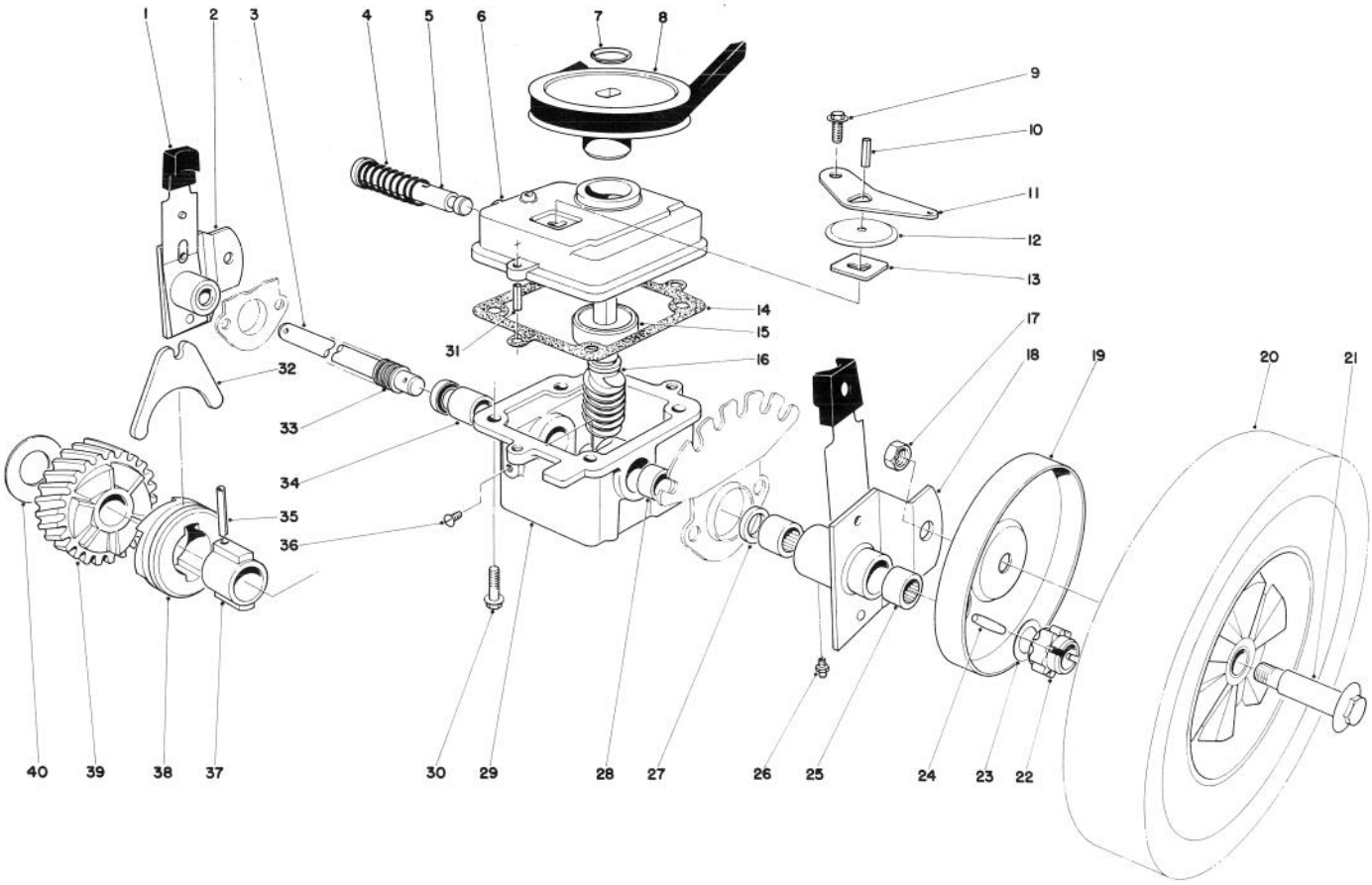

GEAR CASE ASSEMBLY

Ref. No.	Part No.	Description	No. Used
1	25-7740	Knob – Arm	2
2	37-9690	Pivot Arm R.H. (Incl. Ref. #25 & 27)	1
3	36-6301	Drive Shaft	1
4	3-0731	Spring	1
5	5-3248	Shifter Rod	1
6	39-1100	Case – Upper	1
7	3290-346	Retainer – Push On	1
8	18-9760	Pulley	1
9	32140-64	Self Tapping Screw	1
10	32121-23	Roll Pin	1
11	5-3252	Shifter Arm	1
12	3-2615	Dust Cover	1
13	3-0681	Latch Plate	1
14	36-1000	Gasket	1
15	251-284	Bearing	1
16		Shaft – Worm	1
17	32146-6	Locknut	2
18	37-9680	Pivot Arm L.H. (Incl. Ref. #25 & 27)	1
19	23-0280	Wheel Cover	2
20	11-3399	Wheel & Tire Assembly	2
21	27-6230	Wheel Bolt	2

*Not Illustrated

Ref. No.	Part No.	Description	No. Used
22	18-9690	Pinion Gear	2
23	18-9810	Thrust Washer	2
24	3284-3	Groove Pin	2
25	252-96	Needle Bearing	4
26	302-5	Grease Fitting	2
27	253-140	Seal	4
28	256-110	Bushing	1
29	8-0479	Case – Lower (Incl. Ref. # 27, 28 & 34)	1
30	11-9760	Screw	4
31	32121-1	Roll Pin	2
32	5-3247	Shifter Fork	1
33	24-7921	Cover – Drive Shaft	1
34	256-263	Bushing	1
35	32121-88	Coil Pin	1
36	28-1550	Nylon Screw	1
37	3-0721	Sleeve	1
38	19-5660	Clutch Jaw	1
39		Helical Gear	1
40	3-0724	Thrust Washer	1
*	8-5679	Worm Shaft & Gear Assembly (Incl. Ref. #16 & 39)	1
*	8-7809	Gear Case Assembly Complete	1

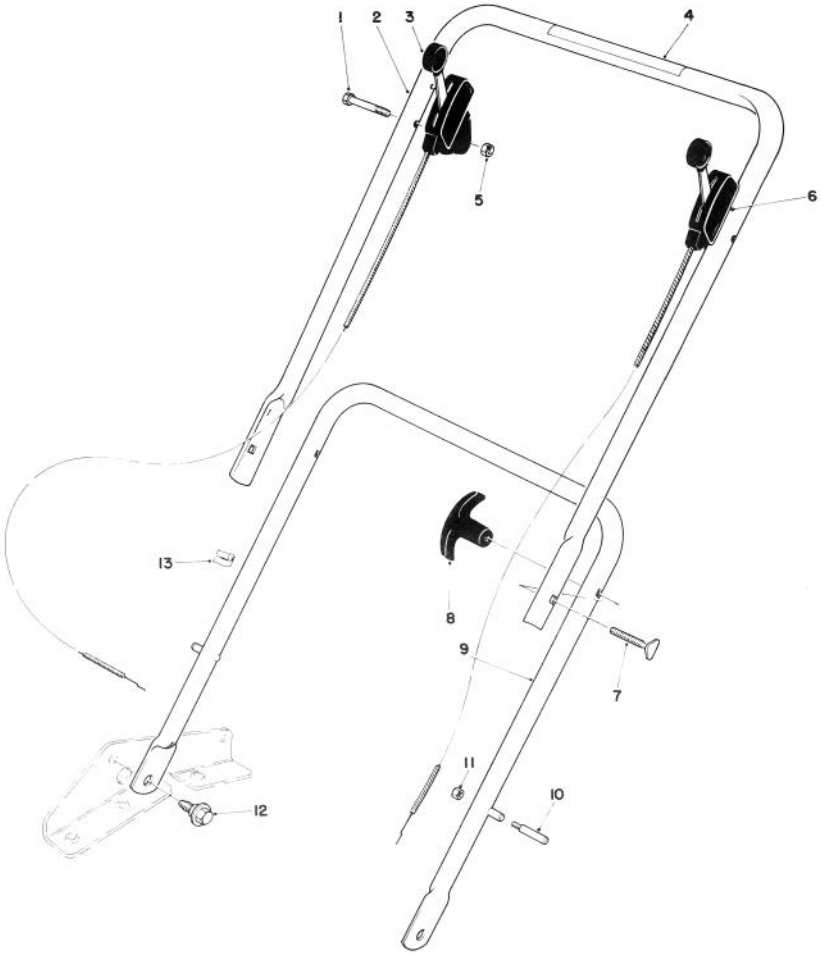

HANDLE ASSEMBLY

Ref. No.	Part No.	Description	No. Used
1	321-10	Capscrew	2
2	39-5641	Upper Handle	1
3	33-2535	Throttle Control	1
4	29-6290	Decal — Danger	1
5	32146-17	Locknut	2
6	33-2521	Traction Control	1
7	6-6330	Handle Screw	2

Ref. No.	Part No.	Description	No. Used
8	233-41	Knob Handle	2
9	38-1260	Lower Handle	1
10†	17-9380	Handle Pin	2
11†	32146-8	Locknut	2
12	5-2490	Shoulder — Screw	2
13	218-466	Clip	2

†Service Replacement Parts

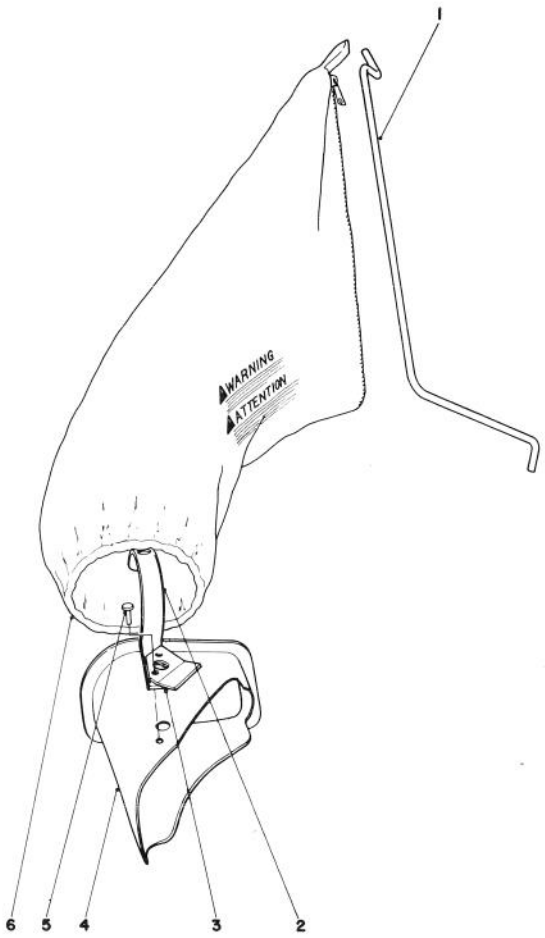

GRASS BAGGING KIT — NO. 8-8109 (Optional)

Ref. No.	Part No.	Description	No. Used
1	19-4210	Bag Rod	1
2	28-4340	Handle Bag Chute	1
3	40-4570	Stop Deflector	1

Ref. No.	Part No.	Description	No. Used
4	38-6061	Grass Chute (Incl. Ref.#2, 3 & 5)	1
5	3295-37	Rivet Semi Tubular	2
6	6-0929	Grass Bag	1

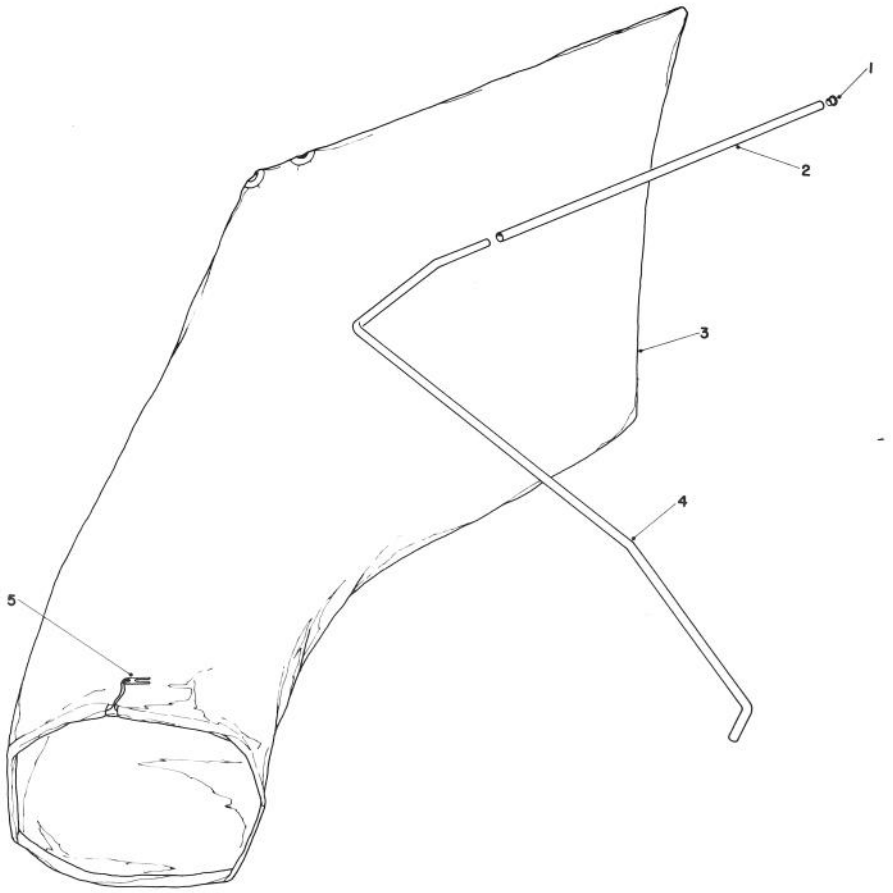

GIANT BAGGING KIT (Optional)

Ref. No.	Part No.	Description	No. Used
1	2410-29	Cap	1
2	29-7000	Tube 25" Lg.	1
*	11-0650	Tube 28" Lg.	1

Ref. No.	Part No.	Description	No. Used
3	8-4719	Bag (Incl. Ref. #5)	1
4	19-2630	Hanger Rod	1
5	3-2781	Bag Cord Fastener	1

*Not Illustrated

BRIGGS & STRATTON ENGINE MODEL NO. 92908-2059-01
BRIGGS & STRATTON ENGINE MODEL NO. 93508-0198-01

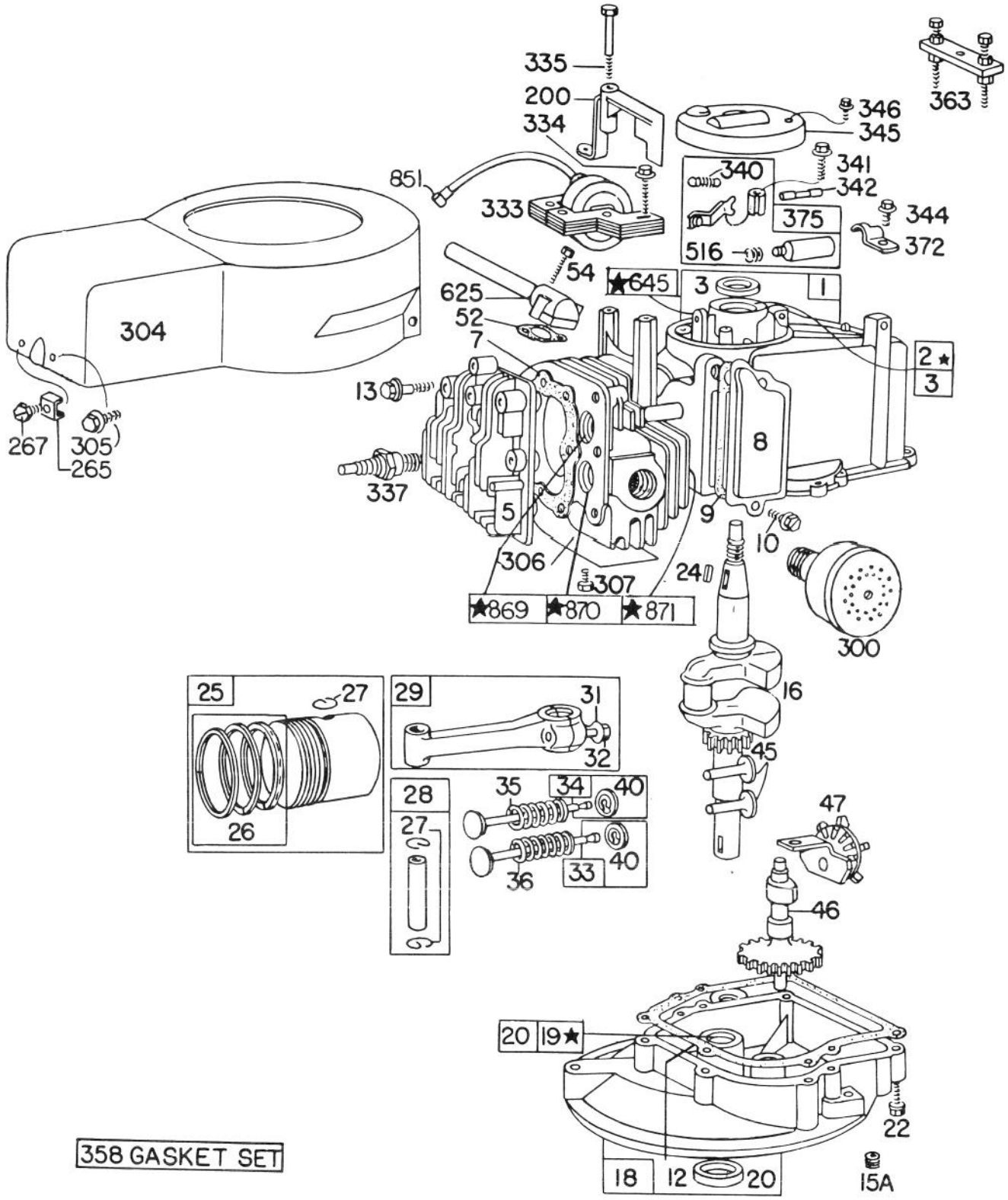

★NOTE-SPECIAL TOOLS REQUIRED FOR INSTALLING
SEE REPAIR INSTRUCTION MANUAL

BRIGGS & STRATTON ENGINE MODEL NO. 92908-2059-01
BRIGGS & STRATTON ENGINE MODEL NO. 93508-0198-01

Ref. No.	Part No.	Description	No. Used
1	298988	Cylinder Assembly	1
2	293708	Bushing – Cylinder	
		Note: Requires special tools for installation.	1
3	299819	Seal – Oil	1
5	211479	Head – Cylinder	1
7	*270341	Gasket – Cylinder Head	1
8	298383	Breather – Valve Chamber	1
9	*270239	Gasket – Valve Cover	1
10	93394	Screw – Breather	1
12	*270833	Gasket – Crankcase – .015" thick (Std.)	1
	*270895	Gasket – Crankcase – .005" thick	1
	*270896	Gasket – Crankcase – .009" thick	1
13	93111	Screw – Cylinder Head (1-15/16" long)	1
15A	93418	Plug – Oil Drain (Socket Hd.)	1
16	261417	Crankshaft	1
18	390810	Sump – Oil	1
19	293709	Bushing – Oil Sump	
		Note: Requires Special Tools for Installation.	1
20	391483	Seal – Oil	1
22	93032	Screw – Sump Mtg.	1
24	61760	Key – Flywheel	1
25	298904	Piston Assy. – Std.	1
	298905	Piston Assy. – .010" O.S.	1
	298906	Piston Assy. – .020" O.S.	1
	298907	Piston Assy. – .030" O.S.	1
26	298982	Ring Set – Std. Piston	1
	298983	Ring Set – .010" O.S. Piston	1
	298984	Ring Set – .020" O.S. Piston	1
	298985	Ring Set – .030" O.S. Piston	1
27	26026	Lock – Piston Pin	1
28	298909	Pin Assy. – Piston – Std.	1
	298908	Pin Assy. – Piston – .005" O.S.	1
29	294201	Rod Assy. – Connecting	
		Note: For Connecting Rod with .020" undersize Crankpin Bore – order No. 296079.	1
31	220756	Lock – Conn. Rod Screw	1
32	92296	Screw – Connecting Rod	1
33	296676	Valve – Exhaust	1
34	296677	Valve – Intake	1
35	260552	Spring – Intake Valve	1
36	26478	Spring – Exhaust Valve	1
40	93312	Retainer – Valve Spring	1
45	230173	Tappet – Valve	1
46	210453	Gear – Cam	1

*Included in Gasket Set – Part No. 298989.

Ref. No.	Part No.	Description	No. Used
47	294652	Oil Slinger Gear and Bracket	1
52	*270345	Gasket – Intake Elbow	1
54	93485	Screw – Intake Elbow Mtg.	1
200	68388	Blade – Governor	1
265	22372	Clamp – Casing	1
267	93469	Screw – Clamp Mtg.	1
300	391435	Muffler – Exhaust	1
304	390279	Housing – Blower	1
305	93559	Screw–Blower Housing Mtg.	1
306	221805	Shield – Cylinder	1
307	93490	Screw – Cylinder Shield and Rotating Screen Mtg.	1
333	298502	Armature – Magneto	1
334	93381	Screw – Armature Mtg.	1
335	93435	Screw – Armature and Governor Blade Mounting	1
337	293918	Plug – Spark (with Gasket) (Resistor Type) 1-1/2" high. Spark Plugs use Ignition Cable Terminal No. 221798.	1
340	26018	Spring – Breaker Arm	1
341	93381	Screw – Breaker Arm Mtg.	1
342	65704	Plunger – Breaker Point	1
344	93042	Screw – Cond. Clamp Mrg.	1
345	220366	Cover – Breaker Point and Condenser	1
346	93705	Screw – Dust Cover Mtg.	1
358	298989	Gasket Set	1
363	19069	Puller – Flywheel (Optional Accessory)	1
372	220477	Clamp – Condenser	1
375	294628	Breaker Points and Condenser Set	
		Note: 299061 Ignition Kit Includes: 294628 Point Set 65704 Plunger 61760 Key – Flywheel	1
516	260374	Spring – Connector	1
625	298775	Tube – Fuel Intake	1
645	23513	Bushing – Plunger	1
851	221798	Terminal – Ignition Cable	1
869	210879	Seat – Intake Valve (Std.)	1
		Note: For installation and options see Repair Manual.	
870	211291	Seat – Exhaust Valve (Std.)	
		Note: For installation and options see Repair Manual.	1
871	63709	Guide – Exhaust Valve	1

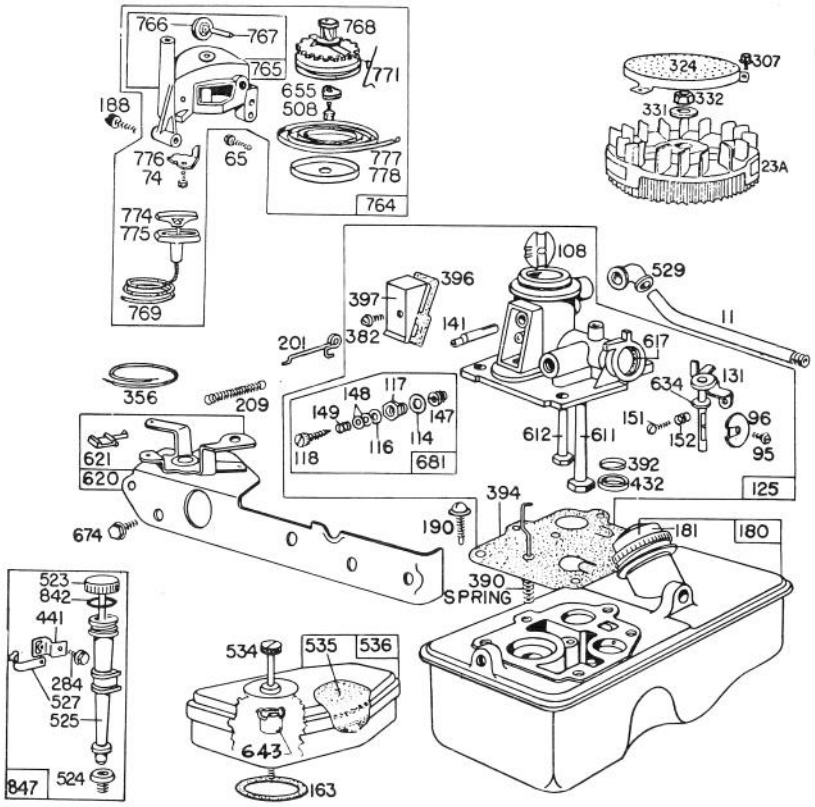

BRIGGS & STRATTON ENGINE MODEL NO. 92908-2059-01

Ref. No.	Part No.	Description	No. Used
11	230802	Tube – Breather	1
23A	299982	Flywheel – Magneto	1
65	93587	Screw – Vertical Pull Starter Mtg.	1
74	93490	Screw	1
95	93499	Screw – Throttle Valve Mtg.	1
96	211237	Valve – Throttle	1
108	298819	Valve – Choke	1
114	66594	Gasket – Needle Valve Nut	1
116	65978	Packing – Needle Valve	1
117	230590	Nut – Needle Valve	1
118	23433	Valve – Needle	1
125	390065	Carburetor Assembly	1
131	299977	Shaft and Lever – Throttle	1
141	68908	Shaft – Choke	1
147	230591	Seat – Needle Valve	1
148	22235	Washer – Needle Valve	2
149	26336	Spring – Needle Valve	1
151	93524	Screw – Rd. Hd	1
152	260746	Spring – Throttle Adj.	1
163	270816	Gasket – Air Cleaner Mounting	1
180	391694	Tank Assembly – Fuel	1
181	298425	Cap – Fuel Tank	1
188	93585	Screw – Fuel Tank and Starter Mounting	1
190	93440	Screw – Fuel Tank Mtg.	1
201	261027	Link – Governor	1
209	261106	Spring – Governor (For 2800 to 3000 RPM)	1
284	93572	Screw – Clamp Mtg.	1
307	93490	Screw – Cylinder Shield and Rotating Screen Mounting	1
324	222063	Screen – Rotating	1
331	220865	Washer – Flywheel	1
332	92284	Nut – Flywheel	1
356	298479	Wire – Ground	1
382	93545	Screw – Choke Link Cover	1
390	261015	Spring – Diaphragm	1
392	260455	Spring – Fuel Pump Diaphragm	1
394	391681	Diaphragm – Carburetor	1
396	270571	Gasket – Choke Link Cover	1
397	211678	Cover – Choke Link	1

Ref. No.	Part No.	Description	No. Used
432	221377	Cap – Spring	1
441	222530	Bracket – Oil Fill Tube	1
508	93158	Screw	1
523	391838	Cap with Dipstick – Oil Filler **Note:** For complete Oil Fill Cap with Dipstick and Oil Fillter Tube Assy. – order Part 392055.	
524	68838	Seal – Filler Tube	1
525	280131	Tube – Oil Filler	1
527	222548	Clamp – Oil Filler Tube	1
529	67838	Grommet – Breather	1
534	93374	Screw – Air Cleaner	1
535	270579	Element – Air Cleaner	1
536	390055	Cleaner Assembly – Air	1
611	297219	Pipe – Fuel (long)	1
612	296811	Pipe – Fuel (short)	1
617	270344	Seal – Fuel Intake Tube	1
620	299974	Plate – Carburetor Control Uses: 222984 Control Bracket	1
621	297472	Switch – Stop	1
634	270167	Washer – Throttle Shaft (Felt)	1
643	221321	Cup – Air Cleaner	1
655	222057	Anchor – Spring	1
674	93447	Screw – Tank to Bracket	1
681	299060	Needle Valve Kit	1
764	392064	Vertical Pull	1
765	392138	Housing – Vertical Pull Starter	1
766	280022	Pulley – Rope (Small)	1
767	231048	Pin – Small Rope Pulley (7/16" Long)	1
768	392063	Pulley and Gear Assy. – Starter	1
769	66734	Rope – Vertical Pull Starter	1
771	299961	Clip – Vertical Pull Starter	1
774	280121	Insert – Starter Handle	1
775	280036	Grip – Starter Rope	1
776	222049	Guide – Rope	1
777	390066	Spring – Vertical Pull Starter Pulley	1
778	280021	Cover – Vertical Pull Starter Pulley	1
842	270920	Seal – Oil Filler Cap	1
847	392055	Tube Assy. – Oil Fill	1

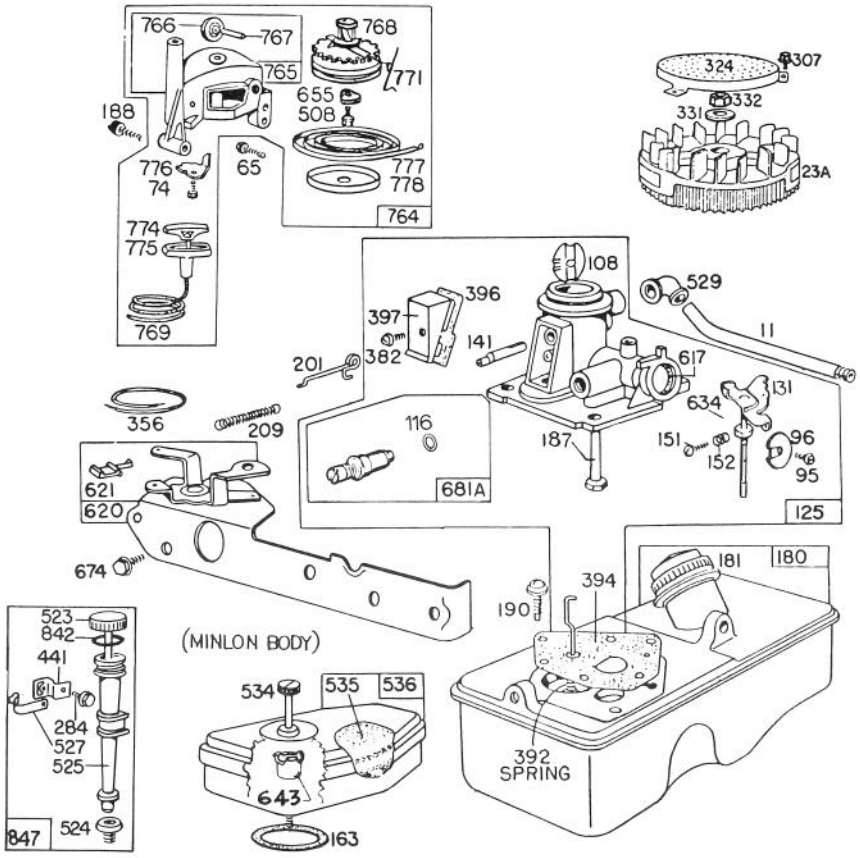

BRIGGS & STRATTON ENGINE MODEL NO. 93508-0198-01

Ref. No.	Part No.	Description	No. Used
11	230802	Tube – Breather	1
23A	299982	Flywheel – Magneto	1
65	93587	Screw–Vertical Pull Starter Mtg.	1
74	93490	Screw	1
95	93499	Screw – Throttle Valve Mtg.	1
96	211203	Valve – Throttle	1
108	280178	Valve – Choke	1
116	280203	Seal, O-Ring	1
125	394591	Carburetor Assembly	1
131	394588	Shaft and Lever – Throttle	1
141	68908	Shaft – Choke	1
151	93524	Screw – Machine Rd. Head	1
152	260746	Spring – Throttle Adjust	1
163	270816	Gasket – Air Cleaner Mounting	1
180	393113	Tank Assembly – Fuel	1
181	298425	Cap – Fuel Tank	1
187	393001	Pipe – Fuel	1
188	93585	Screw – Fuel Tank and Starter Mounting	1
190	93440	Screw – Fuel Tank Mounting	1
201	260878	Link – Governor	1
209	260875	Spring – Governor For 3400 to 3600 RPM Top Speed – Set No Load	1
284	93572	Screw – Clamp Mounting	1
307	93490	Screw – Cylinder Shield and Rotating Screen Mounting	1
324	222063	Screen – Rotating	1
331	220865	Washer – Flywheel	1
332	92284	Nut – Flywheel	1
356	298479	Wire – Ground	1
382	93864	Screw – Choke Link Cover	1
392	261016	Spring – Diaphragm	1
394	299637	Diaphragm – Carburetor	1
396	270571	Gasket – Choke Link Cover	1
397	211678	Cover – Choke Link	1
441	222530	Bracket – Oil Fill Tube	1

Ref. No.	Part No.	Description	No. Used
508	93158	Screw	1
523	391838	Cap with Dipstick – Oil Filler NOTE: For Complete Oil Fill Cap with Dipstick and Oil Filler Tube Assembly – Order Part 392055	1
524	68838	Seal – Filler Tube	1
525	280131	Tube – Oil Filler	1
527	222548	Clamp – Oil Fill Tube	1
529	67838	Grommet – Breather	1
534	93374	Screw – Air Cleaner	1
535	270579	Element – Air Cleaner	1
536	390055	Cleaner Assembly – Air	1
617	270344	Seal – Intake Tube	1
620	299974	Plate – Carburetor Control	1
621	297472	Switch – Stop	1
634	270167	Washer – Throttle Shaft (Felt)	1
643	221321	Cup – Air Cleaner	1
655	222057	Anchor – Spring	1
674	93158	Screw – Tank to Bracket	1
681A	393451	Needle Valve Kit	1
764	392064	Vertical Pull	1
765	392138	Housing – Vertical Pull Starter	1
766	280022	Pulley – Rope (Small)	1
767	231048	Pin – Small Rope Pulley (7/16" Long)	1
768	392063	Pulley and Gear Assy. – Starter	1
769	66734	Rope – Vertical Pull Starter	1
771	299961	Clip – Vertical Pull Starter	1
774	280121	Insert – Starter Handle	1
775	280036	Grip – Starter Rope	1
776	222049	Guide – Rope	1
777	390066	Spring – Vert. Pull Starter Pulley	1
778	280021	Cover – Vert. Pull Starter Pulley	1
842	270920	Seal – Oil Filler Cap	1
847	392055	Tube Assembly – Oil Fill	1

IDENTIFICATION AND ORDERING

MODEL AND SERIAL NUMBERS

The Mower has two identification numbers: a model number and a serial number. The two numbers are stamped on a decal which is located on the mower housing between the rear wheels. In any correspondence concerning the mower, supply model and serial numbers to assure that correct information and replacement parts are obtained.

To order replacement parts from an Authorized TORO Service Dealer, supply the following information:

1. Model and serial numbers of the mower.
2. Part number, description, and quantity of part(s) desired.

Note: Do not order by reference number if a parts catalog is being used; use the PART NUMBER.

The Toro Promise

A ONE YEAR LIMITED WARRANTY

The Toro Company promises to repair your TORO Product if defective in materials or workmanship. The following time periods from the date of purchase apply:

Residential Product . . . . . 1 Year
Residential Products Used Commercially . . . 45 Days

The costs of parts and labor are included, but the customer pays the transportation costs. Just return any residential product to an Authorized TORO Service Dealer or TORO Distributor.

Should you feel your TORO Product is defective and wish to rely on The Toro Promise, the following procedure is recommended:

1. Contact any Authorized TORO Service Dealer, TORO Master Service Dealer, or TORO Distributor (the Yellow Pages of your telephone directory is a good reference source).
2. He will either instruct you to return the product to him or recommend another Authorized TORO Service outlet which might be more convenient.
3. Bring the product along with your original sales slip, or other evidence of purchase date, to the service dealer.
4. The servicing dealer will inspect the unit, advise you whether the product is defective and, if so, make all repairs necessary to correct the defect without extra charge to you.

If for any reason you are dissatisfied with the dealer's analysis of the defect or the service performed, you may contact us.

Write:

TORO Consumer Service Department
8111 Lyndale Avenue South
Minneapolis, Minnesota 55420

The above remedy of product defects through repair by an Authorized TORO Service Dealer is the purchaser's sole remedy for any defect.

THERE IS NO OTHER EXPRESS WARRANTY. ALL IMPLIED WARRANTIES OF MERCHANTABILITY AND FITNESS FOR USE ARE LIMITED TO THE DURATION OF THE EXPRESS WARRANTY.

Some states do not allow limitations on how long an implied warranty lasts, so the above limitation may not apply to you.

This warranty applies only to parts or components which are defective and does not cover repairs necessary due to normal wear, misuse, accidents, or lack of proper maintenance. Regular, routine maintenance of the unit to keep it in proper operating condition is the responsibility of the owner.

All warranty repairs reimbursable under The Toro Promise must be performed by an Authorized TORO Service Dealer using Toro approved replacement parts.

Repairs or attemped repairs by anyone other than an Authorized TORO Service Account are not reimbursable under The Toro Promise. In addition, these unauthorized repair attempts may result in additional malfunctions, the correction of which is not covered by warranty.

THE TORO COMPANY IS NOT LIABLE FOR INDIRECT, INCIDENTAL OR CONSEQUENTIAL DAMAGES IN CONNECTION WITH THE USE OF THE PRODUCT INCLUDING ANY COST OR EXPENSE OF PROVIDING SUBSTITUTE EQUIPMENT OR SERVICE DURING PERIODS OF MALFUNCTION OR NON-USE.

Some states do not allow the exclusion or limitation of incidental or consequential damages, so the above limitation or exclusion may not apply to you.

This warranty gives you specific legal rights, and you may also have other rights which vary from state to state.

COUNTRIES OTHER THAN THE UNITED STATES OR CANADA

Customers who have purchased TORO products exported from the United States or Canada should contact their TORO Distributor (Dealer) to obtain guarantee policies for your country, province or state. If for any reason you are dissatisfied with your Distributor's service or have difficulty obtaining guarantee information, contact the TORO importer. If all other remedies fail, you may contact us at The Toro Company.

Compliance with Radio Interference Regulations Certified.
Certifie Conforme au Reglement sur le Brouillage Radioelectrique.

Litho in U.S.A.