Operator’s Manual

Reelmaster® 5510 Traction Unit

Model—Serial Range

03964—417200000 and Up

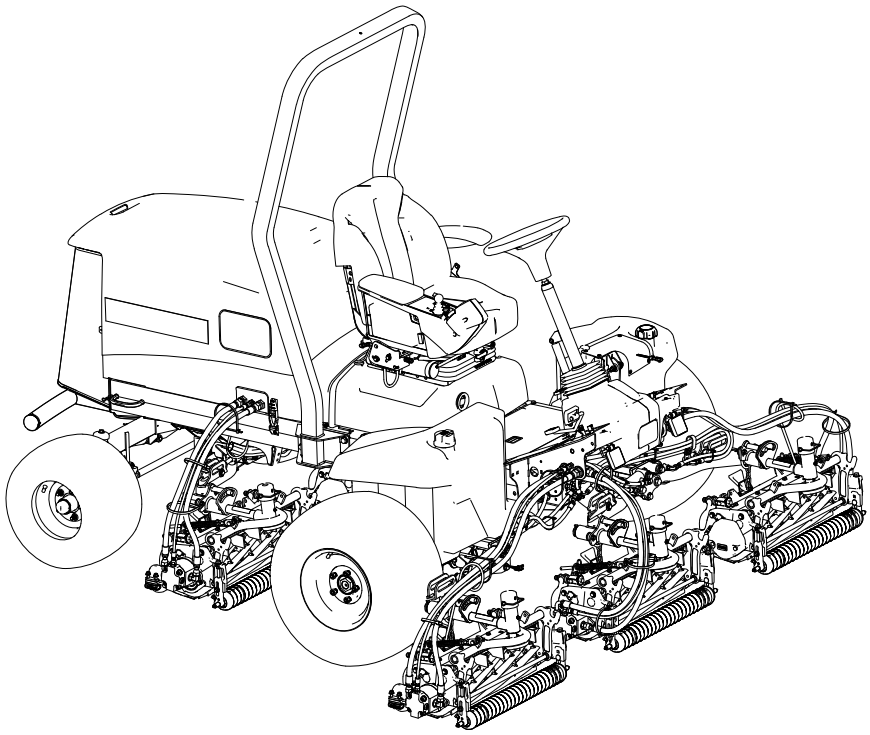

3464-490B

Original Instructions (EN)

3464-490 B

Disclaimers and Regulatory Information

This product complies with all relevant European directives; for details, please see the separate product specific Declaration of Conformity (DOC) sheet.

It is a violation of California Public Resource Code Section 4442 or 4443 to use or operate the engine on any forest-covered, brush-covered, or grass-covered land unless the engine is equipped with a spark arrester, as defined in Section 4442, maintained in effective working order, or the engine is constructed, equipped, and maintained for the prevention of fire.

The enclosed engine owner's manual is supplied for information regarding the US Environmental Protection Agency (EPA) and the California Emission Control Regulation of emission systems, maintenance, and warranty. Replacements may be ordered through the engine manufacturer.

⚠ WARNING

CALIFORNIA
Proposition 65

Diesel engine exhaust and some of its constituents are known to the State of California to cause cancer, birth defects, and other reproductive harm.

Battery posts, terminals, and related accessories contain lead and lead compounds, chemicals known to the State of California to cause cancer and reproductive harm. Wash hands after handling.

Use of this product may cause exposure to chemicals known to the State of California to cause cancer, birth defects, or other reproductive harm.

Table of Contents

Disclaimers and Regulatory Information 2
Chapter 1: Introduction 1–1
- Intended Use 1–1
- Getting Help 1–1
- Manual Conventions 1–2
  - Safety Alert Classifications 1–2

Chapter 2: Safety 2–1
- General Safety 2–1
- Before Operation Safety 2–1
  - Fuel Safety 2–2
- During Operation Safety 2–2
  - Rollover Protection System (ROPS) Safety 2–3
  - Slope Safety 2–3
- After Operation Safety 2–4
- Maintenance Safety 2–4
  - Engine Safety 2–5
  - Electrical System Safety 2–5

© 2024—The Toro® Company

8111 Lyndale Ave So
Bloomington, MN 55044

Contact us at www.Toro.com

Printed in the USA

All rights reserved

Cooling System Safety 2–5
Hydraulic System Safety 2–5
Blade Safety 2–6
Storage Safety 2–6
Safety and Instructional Decals 2–7
Chapter 3: Setup 3–1
1 Preparing the Machine 3–1
2 Adjusting the Control-Arm Position 3–1
3 Installing the Cutting Units 3–2
Preparing the Machine 3–2
Preparing the Cutting Units 3–2
Positioning the Turf Compensating Spring and Installing the Hose Guide 3–3
Installing the Hose Guide 3–5
Positioning the Turf Compensating Spring 3–6
Installing the Kickstand 3–8
Installing the Front Cutting Units to the Lift Arms 3–8
Installing the Rear Cutting Units to the Lift Arms 3–9
Installing the Rear Cutting Units to the Lift Arms 3–9
Locking the Cutting-Unit Pivot for Cutting Grass on a Hill Side 3–10
Installing the Cutting Unit Lift-Arm Chains 3–10
Installing the Reel Motors 3–10
4 Using the Cutting-Unit Kickstand 3–12
5 Applying the Production Year Decal 3–12
Chapter 4: Product Overview 4–1
Controls 4–1
Key Switch 4–2
Lower Mow/Raise Control Lever 4–2
Parking-Brake Switch 4–2
Cruise-Control Switch 4–3
Power-Takeoff (PTO) Switch 4–3
Headlight Switch 4–4
Throttle-Control Lever 4–4
InfoCenter Display 4–4
Tilt-Steering Pedal 4–5
Traction Pedal 4–5
Hydraulic-Filter-Restriction Indicator 4–6
Power Point 4–6
Seat Controls 4–6
Backlap Levers 4–8
Specifications 4–8
Attachments/Accessories 4–8
Chapter 5: Operation 5–1
Before Operation 5–1
Performing Daily Maintenance 5–1
Fuel 5–1
Checking the Interlock Switches 5–3
Overview of the InfoCenter Display 5–5
During Operation 5–13
Overview of the Machine Operating Characteristics 5–13
Machine Operation 5–13
Overview of the Traction Pedal 5–14
Overview of the Virtual Pedal Stop (VPS) Feature 5–14
Cruise Control 5–15
Overview of the Acceleration Mode 5–16

Overview of the Warm-Up Mode 5–17
Starting the Engine 5–17
Shutting Off the Engine 5–17
Adjusting the Turf-Compensation Spring 5–17
Cutting Grass with the Machine 5–18
Adjusting the Lift-Arm Counterbalance 5–19
Adjusting the Lift-Arm Turnaround Position 5–20
Setting the Reel Speed 5–21
Overview of the Indicator Lights 5–22
Operating Tips 5–22
After Operation 5–25
Tie-Down Point Locations 5–25
Hauling the Machine 5–26
Pushing or Towing the Machine 5–26
Chapter 6: Maintenance 6–1
Recommended Maintenance Schedule 6–1
Daily Maintenance Checklist 6–5
Pre-Maintenance Procedures 6–6
Preparing for Maintenance 6–6
Opening the Hood 6–6
Closing the Hood 6–7
Opening the Screen 6–7
Closing the Screen 6–7
Tilting the Seat 6–8
Lowering the Seat 6–8
Jacking Point Locations 6–8
Lubrication 6–9
Greasing the Bearings and Bushings 6–9
Grease Fitting Locations 6–10
Engine Maintenance 6–11
Checking the Air Cleaner 6–11
Resetting the Air Filter Service Indicator 6–12
Servicing the Air Cleaner 6–12
Engine Oil Specifications 6–13
Checking the Engine Oil Level 6–13
Changing the Engine Oil and Filter 6–15
Fuel System Maintenance 6–16
Fuel Storage 6–16
Servicing the Fuel/Water Separator 6–17
Bleeding the Fuel System 6–18
Draining the Fuel Tank 6–19
Inspecting the Fuel Lines and Connections 6–19
Cleaning the Fuel-Pickup Tube Screen 6–20
Priming the Fuel System 6–22
Electrical System Maintenance 6–23
Inspecting the Electrical Cables 6–23
Disconnecting the Battery 6–23
Connecting the Battery 6–24
Charging the Battery 6–24
Servicing the Battery 6–25
Replacing a 12 V Fuse-Block Fuse 6–25
Replacing the TEC Fuse 6–26
Drive System Maintenance 6–26

Checking the Tire Pressure 6–26
Torquing the Wheel Lug Nuts 6–27
Torquing the Axle Hub Nuts 6–27
Checking the Rear-Wheel Alignment 6–27
Adjusting the Rear Wheel Toe-in 6–28
Cooling System Maintenance 6–28
Coolant Specifications 6–28
Checking the Coolant Level 6–30
Inspecting the Cooling System Hoses 6–30
Cleaning the Engine Cooling System 6–30
Belt Maintenance 6–32
Tensioning the Alternator Belt 6–32
Hydraulic System Maintenance 6–32
Hydraulic Fluid Specifications 6–32
Checking the Hydraulic-Fluid Level 6–33
Inspecting the Hydraulic Lines and Hoses 6–34
Replacing the Hydraulic Filters 6–35
Changing the Hydraulic Fluid 6–37
Cutting Unit Maintenance 6–38
Checking the Reel-to-Bedknife Contact 6–38
Backlapping the Cutting Units 6–38
Chassis Maintenance 6–41
Inspecting the Seat Belt 6–41
Cleaning 6–41
Washing the Machine 6–41
Chapter 7: Storage 7–1
Storing the Machine 7–1
Storing the Battery 7–1
The Toro Warranty
California Proposition 65 Warning Information

Intended Use

This machine is a ride-on, reel-blade lawn mower intended to be used by professional, hired operators in commercial applications. It is primarily designed for cutting grass on well-maintained turf. Using this product for purposes other than its intended use could prove dangerous to you and bystanders.

Read this information carefully to learn how to operate and maintain your product properly and to avoid injury and product damage. You are responsible for operating the product properly and safely.

Getting Help

Visit www.Toro.com for product safety and operation training materials, accessory information, help finding a dealer, or to register your product.

Whenever you need service, genuine Toro parts, or additional information, contact an Authorized Service Dealer or Toro Customer Service and have the model and serial numbers of your product ready. These numbers are located on the serial plate on your product (1). Write the numbers in the space provided.

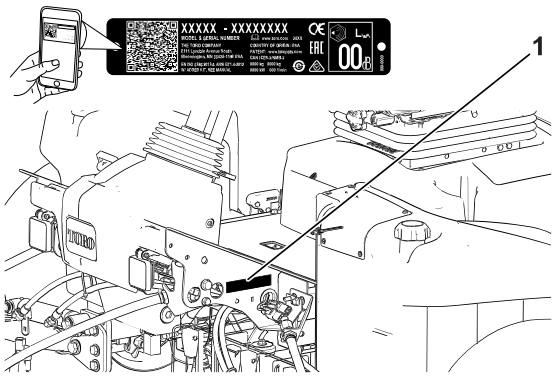

G439286

IMPORTANT

With your mobile device, you can scan the QR code on the serial number decal (if equipped) to access warranty, parts, and other product information.

Model Number:		**Serial Number:**	

Manual Conventions

This manual identifies potential hazards and has safety messages identified by the safety-alert symbol, which signals a hazard that may cause serious injury or death if you do not follow the recommended precautions.



G405934

This manual uses 2 words to highlight information. **Important** calls attention to special mechanical information and **Note** emphasizes general information worthy of special attention.

Safety Alert Classifications

The safety-alert symbol shown in this manual and on the machine identifies important safety messages that you must follow to prevent accidents.

Safety-alert symbol appears above information that alerts you to unsafe actions or situations and is followed by the word **DANGER**, **WARNING**, or **CAUTION**.

DANGER

Danger indicates an imminently hazardous situation which, if not avoided, *will* result in death or serious injury.

WARNING

Warning indicates a potentially hazardous situation which, if not avoided, *could* result in death or serious injury.

CAUTION

Caution indicates a potentially hazardous situation which, if not avoided, *may* result in minor or moderate injury.

General Safety

- This product is capable of amputating hands and feet and of throwing objects.
- Read and understand the contents of this *Operator's Manual* before starting the engine.
- Use your full attention while operating the machine. Do not engage in any activity that causes distractions; otherwise, injury or property damage may occur.
- Do not put your hands or feet near moving components of the machine.
- Do not operate the machine without all guards and other safety protective devices in place and functioning properly on the machine.
- Keep bystanders and children out of the operating area. Never allow children to operate the machine.
- Shut off the engine, remove the key, and wait for all movement to stop before you leave the operator's position. Allow the machine to cool before adjusting, servicing, cleaning, or storing it.

Improperly using or maintaining this machine can result in injury. To reduce the potential for injury, comply with these safety instructions and always pay attention to the safety-alert symbol ⚠, which means **Caution**, **Warning**, or **Danger**—personal safety instruction. Failure to comply with these instructions may result in personal injury or death.

Before Operation Safety

- Never allow children or untrained people to operate or service the machine. Local regulations may restrict the age of the operator. The owner is responsible for training all operators and mechanics.
- Become familiar with the safe operation of the machine, operator controls, and safety signs.
- Before you leave the operator's position, do the following:.
  - Park the machine on a level surface
  - Disengage and lower the cutting units.
  - Engage the parking brake.
  - Shut off the engine and remove the key.
  - Wait for all movement to stop.
  - Allow the machine to cool before adjusting, servicing, cleaning, or storing it.
- Know how to stop the machine and shut off the engine quickly.
- Do not operate the machine without all guards and other safety protective devices in place and functioning properly on the machine.

- Before mowing, always inspect the machine to ensure that the cutting units are in good working condition.
- Inspect the area where you will use the machine and remove all objects that the machine could throw.
- This product generates an electromagnetic field. If you wear an implantable electronic medical device, consult your health care professional before using this product.

Fuel Safety

- Use extreme care in handling fuel. It is flammable and its vapors are explosive.
- Extinguish all cigarettes, cigars, pipes, and other sources of ignition.
- Use only an approved fuel container.
- Do not remove the fuel cap or fill the fuel tank while the engine is running or hot.
- Do not add or drain fuel in an enclosed space.
- Do not store the machine or fuel container where there is an open flame, spark, or pilot light, such as on a water heater or other appliance.
- If you spill fuel, do not attempt to start the engine; avoid creating any source of ignition until the fuel vapors have dissipated.

During Operation Safety

- The owner/operator can prevent and is responsible for accidents that may cause personal injury or property damage.
- Wear appropriate clothing, including eye protection; long pants; substantial, slip-resistant footwear; and hearing protection. Tie back long hair and do not wear loose clothing or loose jewelry.
- Do not operate the machine while ill, tired, or under the influence of alcohol or drugs.
- Use your full attention while operating the machine. Do not engage in any activity that causes distractions; otherwise, injury or property damage may occur.
- Before you start the engine, ensure that all drives are in neutral, the parking brake is engaged, and you are in the operating position.
- Do not carry passengers on the machine and keep bystanders and children out of the operating area.
- Operate the machine only in good visibility to avoid holes or hidden hazards.
- Avoid mowing on wet grass. Reduced traction could cause the machine to slide.
- Keep your hands and feet away from the cutting units.
- Look behind and down before backing up to be sure of a clear path.
- Use care when approaching blind corners, shrubs, trees, or other objects that may obscure your vision.
- Stop the cutting units whenever you are not mowing.
- Slow down and use caution when making turns and crossing roads and sidewalks with the machine. Always yield the right-of-way.

- Operate the engine only in well-ventilated areas. Exhaust gasses contain carbon monoxide, which is lethal if inhaled.
- Do not leave a running machine unattended.
- Before you leave the operator's position, do the following:
  - Park the machine on a level surface.
  - Disengage and lower the cutting units.
  - Engage the parking brake.
  - Shut off the engine and remove the key.
  - Wait for all movement to stop.
  - Allow the machine to cool before adjusting, servicing, cleaning, or storing it.
- Operate the machine only in good visibility and appropriate weather conditions. Do not operate the machine when there is the risk of lightning.
- Use the cruise control (if equipped) only when you can operate the machine in an open, flat area that is free from obstacles and where the machine can move at a constant speed without interruption.

Rollover Protection System (ROPS) Safety

- Do not remove any of the ROPS components from the machine.
- Ensure that the seat belt is attached and that you can release it quickly in an emergency.
- Always wear your seat belt.
- Check carefully for overhead obstructions and do not contact them.
- Keep the ROPS in safe operating condition by thoroughly inspecting it periodically for damage and keeping all the mounting fasteners tight.
- Replace all damaged ROPS components. Do not repair or alter them.

Slope Safety

- Slopes are a major factor related to loss of control and rollover accidents, which can result in severe injury or death. You are responsible for safe slope operation. Operating the machine on any slope requires extra caution.
- Evaluate the site conditions to determine if the slope is safe for machine operation, including surveying the site. Always use common sense and good judgment when performing this survey.
- Review the slope instructions, listed below, for operating the machine on slopes. Before you operate the machine, review the site conditions to determine whether you can operate the machine in the conditions on that day and at that site. Changes in the terrain can result in a change in slope operation for the machine.
  - Avoid starting, stopping, or turning the machine on slopes. Avoid making sudden changes in speed or direction. Make turns slowly and gradually.
  - Do not operate a machine under any conditions where traction, steering, or stability is in question.

Slope Safety (continued)

  - Remove or mark obstructions such as ditches, holes, ruts, bumps, rocks, or other hidden hazards. Tall grass can hide obstructions. Uneven terrain could overturn the machine.
  - Be aware that operating the machine on wet grass, across slopes, or downhill may cause the machine to lose traction.
  - Use extreme caution when operating the machine near drop-offs, ditches, embankments, water hazards, or other hazards. The machine could suddenly roll over if a wheel goes over the edge or the edge caves in. Establish a safety area between the machine and any hazard.
  - Identify hazards at the base of the slope. If there are hazards, mow the slope with a pedestrian-controlled machine.
  - If possible, keep the cutting units lowered to the ground while operating on slopes. Raising the cutting units while operating on slopes can cause the machine to become unstable.

After Operation Safety

- Park the machine on a level surface.
- Disengage and lower the cutting units
- Engage the parking brake.
- Shut off the engine and remove the key.
- Wait for all movement to stop.
- Allow the machine to cool before adjusting, servicing, cleaning, or storing it.
- To help prevent fires, ensure that the cutting units, drives, mufflers, cooling screens, and engine compartment are free from grass and debris buildup. Clean up oil or fuel spills.
- Disengage the drive to the attachment whenever you are hauling or not using the machine.
- Maintain and clean the seat belt(s) as necessary.
- Do not store the machine or fuel container where there is an open flame, spark, or pilot light, such as on a water heater or on other appliances.

Maintenance Safety

- Before you leave the operator’s position, do the following:
  - Park the machine on a level surface.
  - Disengage and lower the cutting units.
  - Engage the parking brake.
  - Shut off the engine and remove the key.
  - Wait for all movement to stop.
  - Allow the machine to cool before adjusting, servicing, cleaning, or storing it.

- Wear appropriate clothing, including eye-protection; long pants and substantial, slip-resistant footwear. Keep hands, feet, clothing, jewelry, and long hair away from moving parts.
- Allow machine components to cool before performing maintenance.
- If possible, do not perform maintenance while the engine is running. Keep away from moving parts.
- Operate the engine only in well-ventilated areas. Exhaust gases contain carbon monoxide, which is lethal if inhaled.
- Support the machine with jack stands whenever you work under the machine.
- Carefully release pressure from components with stored energy.
- Keep all parts of the machine in good working condition and all hardware tightened.
- Replace all worn or damaged decals.
- To ensure safe, optimal performance of the machine, use only genuine Toro replacement parts. Replacement parts made by other manufacturers could be dangerous, and such use could void the product warranty.

Engine Safety

- Shut off the engine before checking the oil or adding oil to the crankcase.
- Do not change the governor speed or overspeed the engine.

Electrical System Safety

- Disconnect the battery before repairing the machine. Disconnect the negative terminal first and the positive last. Connect the positive terminal first and the negative last.
- Charge the battery in an open, well-ventilated area, away from sparks and flames. Unplug the charger before connecting or disconnecting the battery. Wear protective clothing and use insulated tools.

Cooling System Safety

- Swallowing engine coolant can cause poisoning; keep out of reach from children and pets.
- Discharge of hot, pressurized coolant or touching a hot radiator and surrounding parts can cause severe burns.
  - Always allow the engine to cool at least 15 minutes before removing the radiator cap.
  - Use a rag when opening the radiator cap, and open the cap slowly to allow steam to escape.

Hydraulic System Safety

- Seek immediate medical attention if fluid is injected into skin. Injected fluid must be surgically removed within a few hours by a doctor.
- Ensure that all hydraulic-fluid hoses and lines are in good condition and all hydraulic connections and fittings are tight before applying pressure to the hydraulic system.

Hydraulic System Safety (continued)

- Keep your body and hands away from pinhole leaks or nozzles that eject high-pressure hydraulic fluid.
- Use cardboard or paper to find hydraulic leaks.
- Safely relieve all pressure in the hydraulic system before performing any work on the hydraulic system.

Blade Safety

- A worn or damaged blade or bedknife can break, and a piece could be thrown toward you or bystanders, resulting in serious personal injury or death.
- Inspect the blades and bedknives periodically for excessive wear or damage.
- Use care when checking the blades. Wear gloves and use caution when servicing them. Only replace or backlap the blades and bedknives; never straighten or weld them.
- On machines with multiple cutting units, take care when rotating a cutting unit; it can cause the reels in the other cutting units to rotate.

Storage Safety

- Before you leave the operator’s position, do the following:
  - Park the machine on a level surface.
  - Disengage and lower the cutting units.
  - Engage the parking brake.
  - Shut off the engine and remove the key.
  - Wait for all movement to stop.
  - Allow the machine to cool before adjusting, servicing, cleaning, or storing it.
- Do not store the machine or fuel container where there is an open flame, spark, or pilot light, such as on a water heater or other appliance.

Safety and Instructional Decals

Safety decals and instructions are easily visible to the operator and are located near any area of potential danger. Replace any decal that is damaged or missing.

Battery Symbols

Some or all of these symbols are on your battery.



s_batterysymbols2

1. Explosion hazard
2. No fire, open flame, or smoking
3. Caustic liquid/chemical burn hazard
4. Wear eye protection.
5. Read the *Operator's Manual*.
6. Keep bystanders away from the battery.
7. Wear eye protection; explosive gases can cause blindness and other injuries.
8. Battery acid can cause blindness or severe burns.
9. Flush eyes immediately with water and get medical help fast.
10. Contains lead; do not discard

Decal Part: 93-6696

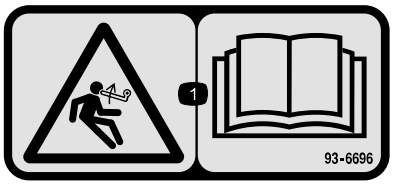

s_decal93-6696

1. Stored energy hazard—read the *Operator's Manual*.

Decal Part: 93-7272

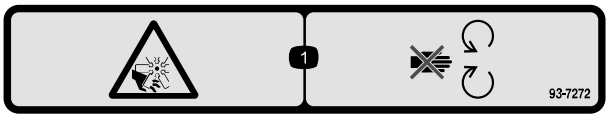

s_decal93-7272

1. Cutting/dismemberment hazard; fan—stay away from moving parts.

Decal Part: 106-6754

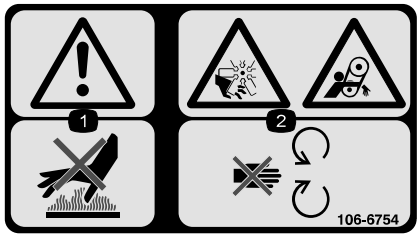

s_decal106-6754

1. Warning—do not touch the hot surface.
2. Cutting/dismemberment hazard, fan; entanglement hazard, belt—stay away from moving parts.

Decal Part: 106-6755



s_decal106-6755

(1) Engine coolant under pressure.

(2) Explosion hazard—read the *Operator's Manual*.

(3) Warning—do not touch the hot surface.

(4) Warning—read the *Operator's Manual*.

Decal Part: 110-9642

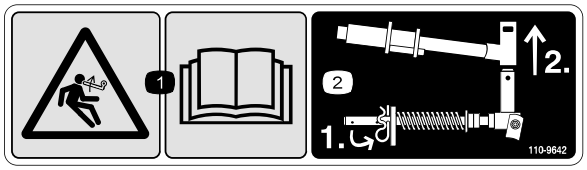

s_decal110-9642

(1) Stored energy hazard—read the *Operator's Manual*.

(2) Move the cotter pin to the hole closest to the rod bracket and then remove the lift arm and pivot yoke.

Decal Part: 120-4158

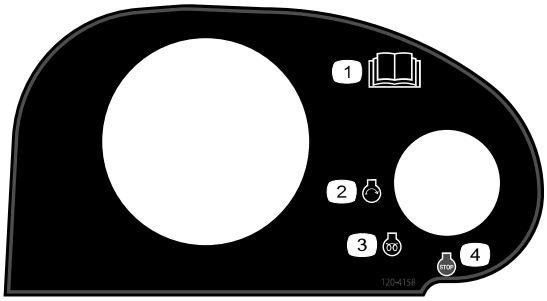

s_decal120-4158

(1) Read the *Operator's Manual*.

(2) Engine—start

(3) Engine—preheat

(4) Engine—stop

Decal Part: 133-2930



s_decal133-2930

1. Warning—do not operate this machine unless you are trained.
2. Warning—wear hearing protection.
3. Thrown object hazard—keep bystanders out of the operating area.
4. Tipping hazard—drive slowly when turning; do not turn sharply while traveling fast; only drive on slopes with the cutting units lowered; always wear a seatbelt.
5. Warning—do not park on slopes; engage the parking brake, lower the cutting units, shut off the engine, and remove the ignition key before leaving the machine.
6. Warning—read the *Operator's Manual*; do not tow the machine.

Decal Part: 136-2159



s_decal136-2159

1. Move seat down
2. Slide seat forward
3. Rotate seat

Decal Part: 136-3702

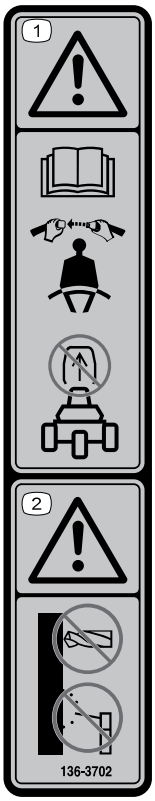

s_decal136-3702

1 Warning—Read the *Operator's Manual*; wear a seatbelt; do not remove the roll bar.

2 Warning—Do not modify the roll bar.

Decal Part: 137-8127

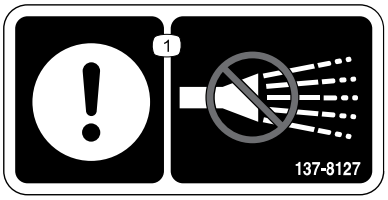

s_decal137-8127

1 Attention—do not spray with high-pressure water.

Decal Part: 145-2484

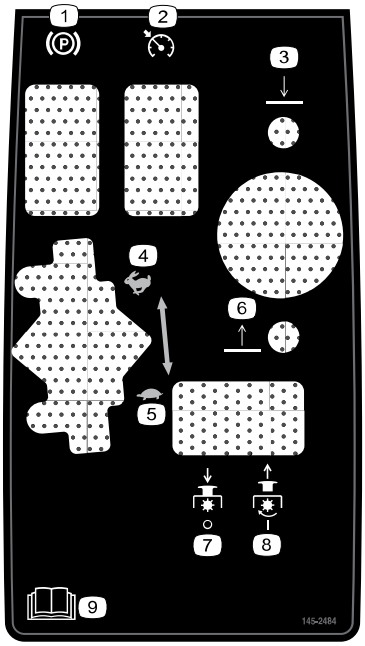

s_decal145-2484

1. Parking brake
2. Cruise control
3. Lower the cutting units
4. Fast
5. Slow
6. Raise the cutting units
7. PTO—Off
8. PTO—On
9. Read the *Operator's Manual*.

Decal Part: 145-2519

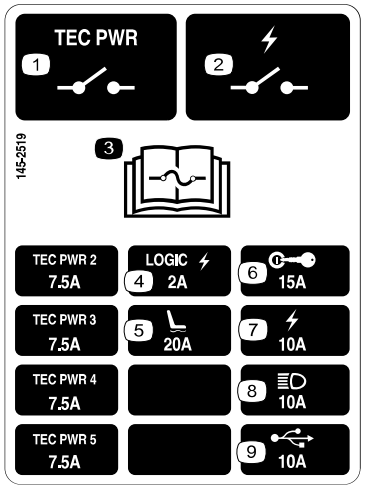

s_decal145-2519

1. TEC power relay
2. Electrical power relay
3. Read the *Operator's Manual* for fuse information.
4. Logic electrical power
5. Air-ride seat
6. Key switch
7. Electrical power
8. Headlights
9. USB power point

Decal Part: 145-2572

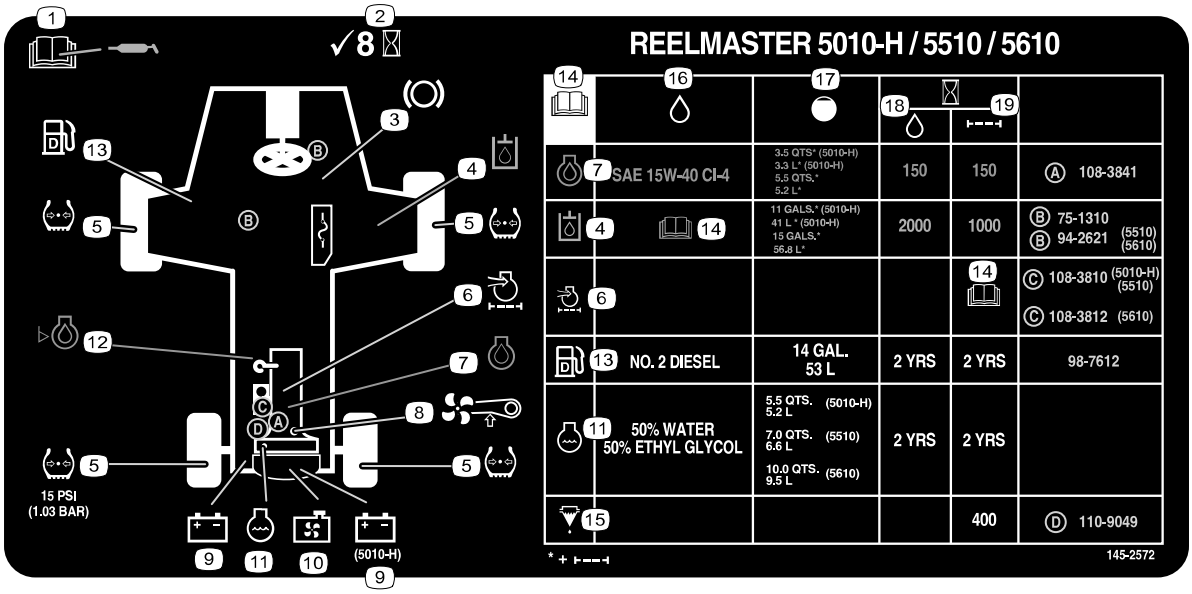

s_decal145-2572

1. Read the *Operator's Manual* for lubrication information.
2. Check every 8 hours.
3. Brake functions
4. Hydraulic fluid
5. Tire pressure
6. Engine air filter
7. Engine oil
8. Fan belt
9. Battery
10. Radiator screen
11. Engine coolant
12. Engine oil level
13. Fuel
14. Read the *Operator's Manual*.
15. Fuel/Water separator
16. Fluids
17. Capacity
18. Fluid interval (hours)
19. Filter interval (hours)

1 Preparing the Machine

1. Park the machine on a level surface, lower the cutting units, and engage the parking brake.
2. Shut off the engine, remove the key, and wait for all moving parts to stop.
3. Check the tire air pressure before use.

   Note: The tires are overinflated for shipping. Adjust the tire air pressure before operating the machine.
4. Check the hydraulic-fluid level.
5. Grease the machine.

IMPORTANT

Failure to properly grease the machine will result in premature failure of critical parts.

6. Open the hood and check the coolant level.
7. Check the level of the engine-oil level, and close and latch the hood.

   Note: The engine ships with oil in the crankcase; however, check the oil level before and after the engine is first started.

2 Adjusting the Control-Arm Position

1. Loosen the 2 bolts (3) securing the control arm (1) to the retaining bracket (2).
2. Adjust the control arm to your desired position and tighten the 2 bolts.

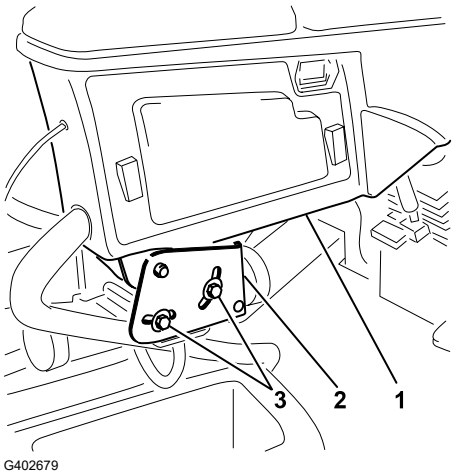

G402679

3 Installing the Cutting Units

Parts Required

1	Right front hose guide
1	Left front hose guide

Preparing the Machine

1. Remove and discard the shipping brackets from the reel motors.
2. Remove the snapper pin [1] and cap [2] from each cutting-unit lift arm.

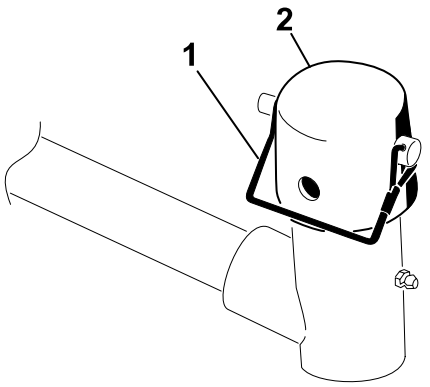

G409088

Preparing the Cutting Units

1. Remove the cutting units from the cartons.
2. Assemble and adjust as described in the cutting unit *Operator's Manual*.
3. Make sure that the counterweight [1] is installed at the proper end of the cutting unit as described in the cutting unit *Operator's Manual*.

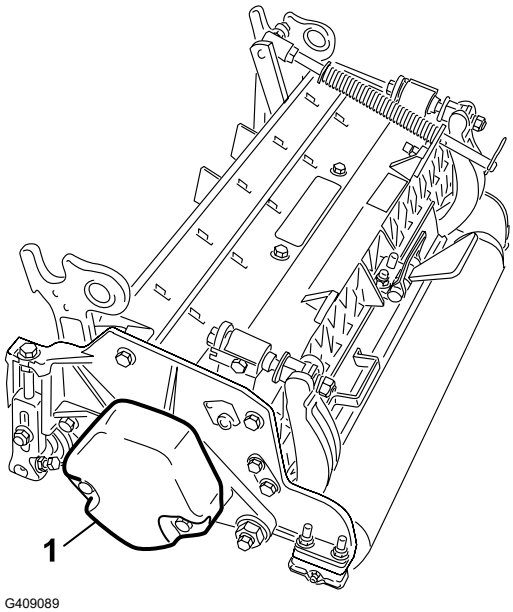

G409089

Positioning the Turf Compensating Spring and Installing the Hose Guide

Cutting Unit 4

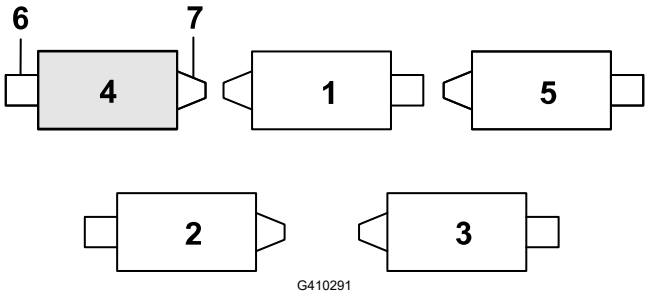

(1) Cutting unit 1
(2) Cutting unit 2
(3) Cutting unit 3
(4) Cutting unit 4
(5) Cutting unit 5
(6) Reel motor
(7) Weight

1. If the hairpin (1) is installed in the rear hole of the compensation-spring rod, remove the hairpin and insert it in the hole next to the bracket.

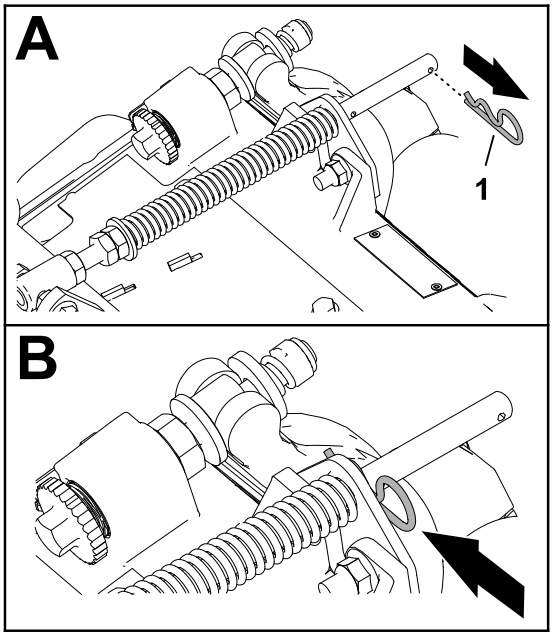

2. Remove the 2 flange locknuts (3/8 inch) (3) and 2 carriage bolts (3/8 x 1-1/4 inches) (1) that secure the turf-compensator bracket (2) to the cutting-unit frame.

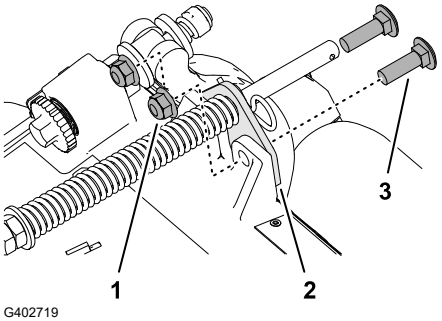

Positioning the Turf Compensating Spring and Installing the Hose Guide (continued)

3. Remove the flange locknut (3/8 inch) ③ securing the bolt ① to the right tab ② of the carrier frame, and remove the compensation spring from the cutting unit.

   Note: Do not remove the flange serrated nut from the bolt.

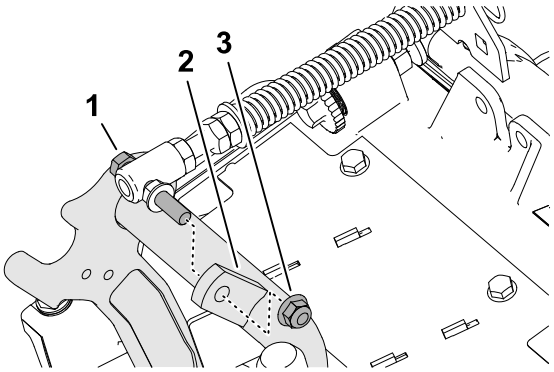

G410295

4. Assemble the bolt ③ of the turf compensation spring to the right tab ② of the carrier frame with the flange locknut (3/8 inch) ①.

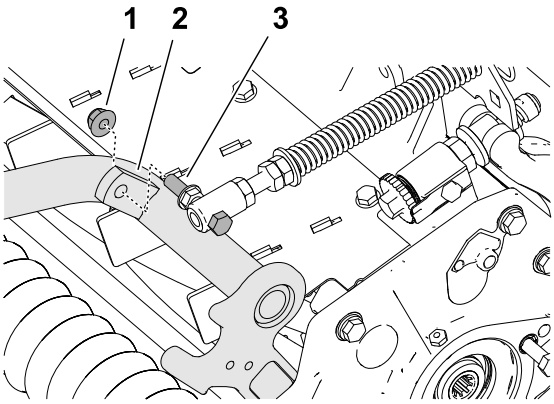

G410296

5. Align the studs ③ of the left hose guide with the holes in the cutting-unit frame and the turf-compensator bracket ①.

   Note: The support loop of the hose guide aligns toward the center of the machine ④.

6. Assemble the hose guide and turf-compensator bracket to the cutting-unit frame with the 2 flange locknuts (3/8 inch) ②.

7. Torque the locknuts and bolts to **37 to 45 N·m (27 to 33 ft-lb)**.

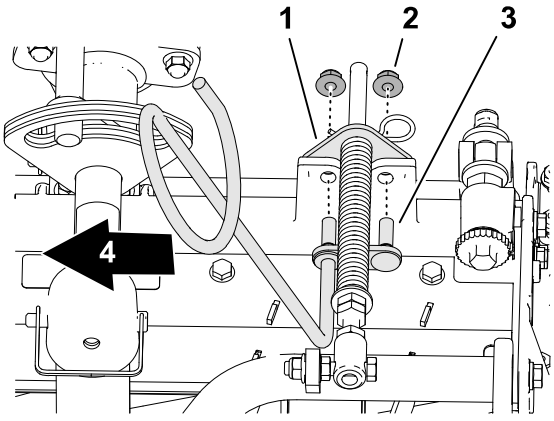

G410297

Installing the Hose Guide

Cutting Unit 5

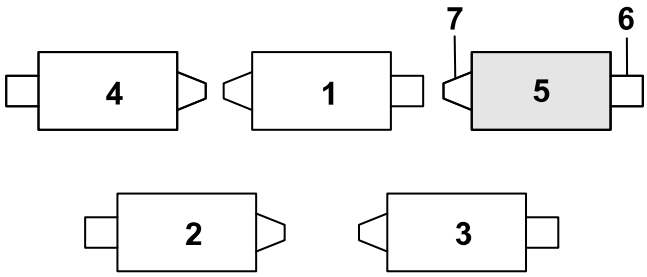

G410309

(1) Cutting unit 1
(2) Cutting unit 2
(3) Cutting unit 3
(4) Cutting unit 4
(5) Cutting unit 5
(6) Reel motor
(7) Weight

1. If the hairpin (1) is installed in the rear hole of the compensation-spring rod, remove the hairpin and insert it in the hole next to the bracket.

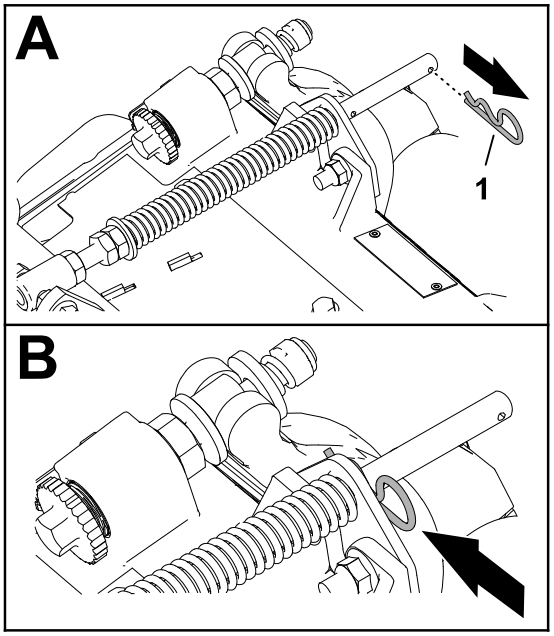

G410292

2. Remove the 2 flange locknuts (3/8 inch) (3) and 2 carriage bolts (3/8 x 1-1/4 inches) (1) that secure the turf-compensator bracket (2) to the cutting-unit frame.

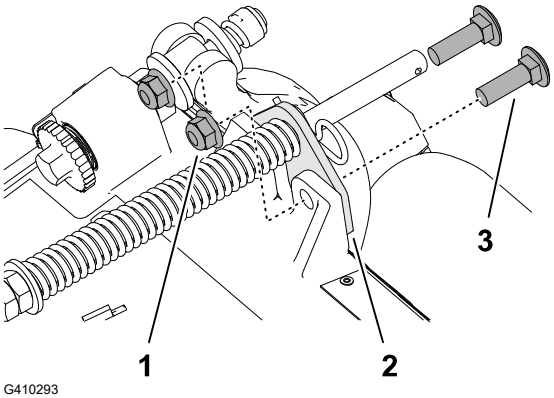

G410293

Installing the Hose Guide (continued)

3. Align the studs (1) of the right hose guide with the holes in the cutting-unit frame and the turf-compensator bracket (2).

   Note: Ensure that the support loop of the hose guide aligns toward the center (4) of the machine.

4. Assemble the hose guide and turf-compensator bracket to the cutting-unit frame with the 2 flange locknuts (3/8 inch) (3).

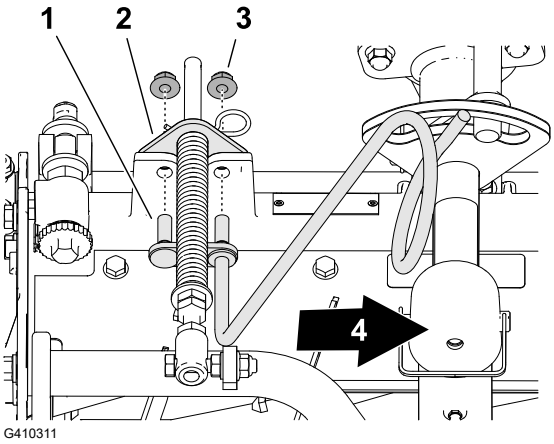

5. Torque the locknuts to **37 to 45 N·m (27 to 33 ft-lb)**.

Positioning the Turf Compensating Spring

Cutting Unit 2

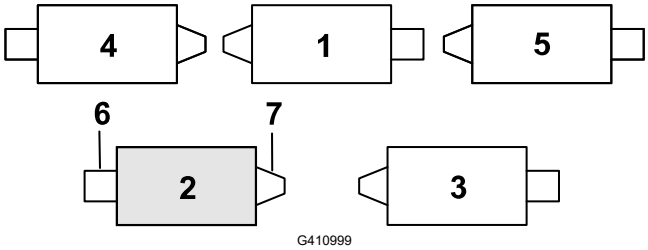

(1) Cutting unit 1
(2) Cutting unit 2
(3) Cutting unit 3
(4) Cutting unit 4
(5) Cutting unit 5
(6) Reel motor
(7) Weight

1. If the hairpin (1) is installed in the rear hole of the compensation-spring rod, remove the hairpin and insert it in the hole next to the bracket.

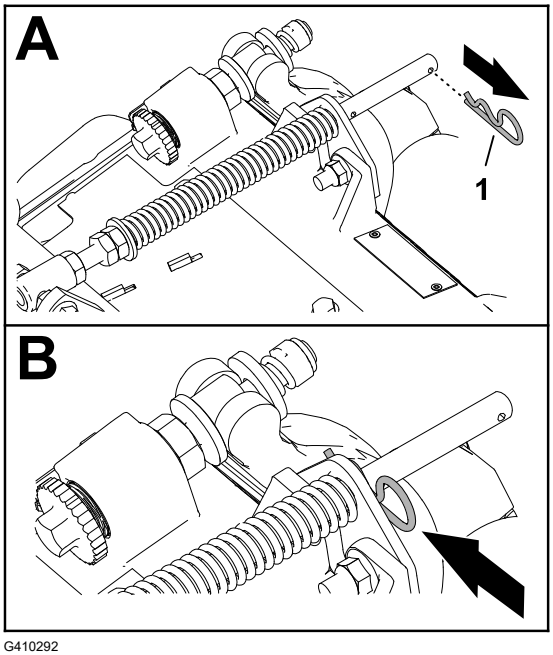

Positioning the Turf Compensating Spring (continued)

2. Remove the 2 flange locknuts (3/8 inch) [3] and 2 carriage bolts (3/8 x 1-1/4 inches) [1] that secure the turf-compensator bracket [2] to the cutting-unit frame.

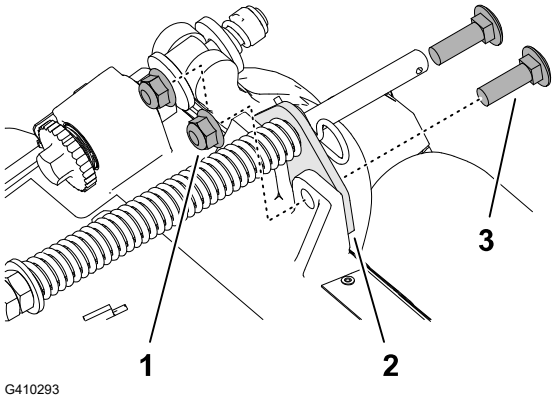

G410293

3. Remove the flange locknut (3/8 inch) [3] that secures the bolt [1] of the turf compensation spring to the right tab [2] of the carrier frame, and remove the compensation spring from the cutting unit.

   Note: Do not remove the flange serrated nut from the bolt.

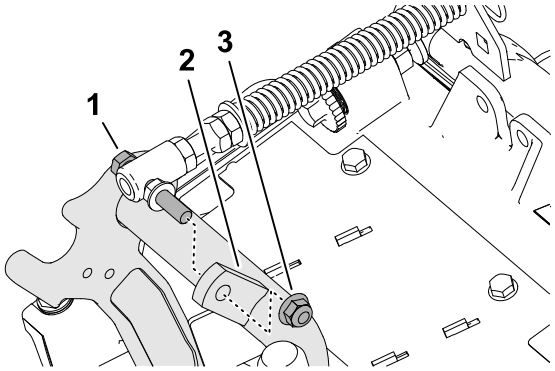

G410295

4. Assemble the bolt [3] of the turf compensation spring to the right tab [2] of the carrier frame with the flange locknut (3/8 inch) [1].

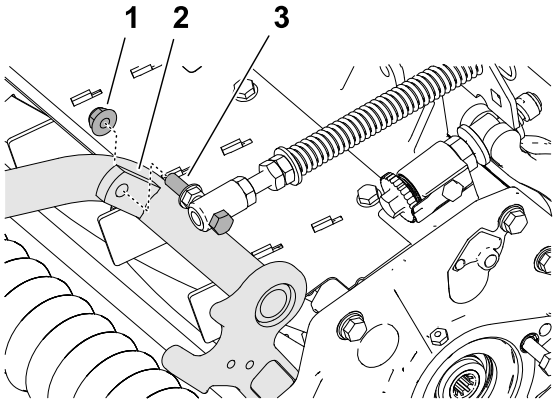

G410296

5. Align the holes in the turf-compensator bracket [1] with the holes in the cutting-unit frame.

   Note: The support loop of the hose guide aligns toward the center of the machine [4].

6. Assemble the turf-compensator bracket to the cutting-unit frame with the 2 carriage bolts (3/8 x 1-1/4 inches) [2] and 2 flange locknuts (3/8 inch) [3].

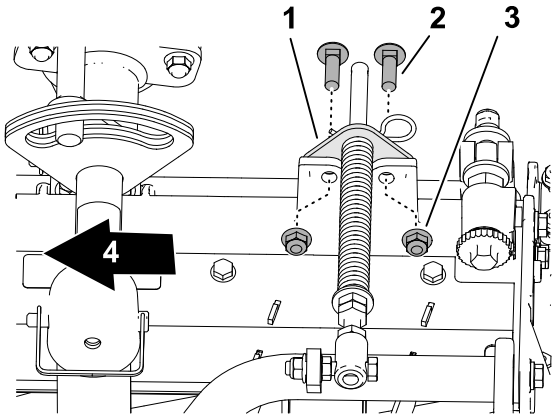

G411000

7. Torque the locknuts and bolts to **37 to 45 N·m (27 to 33 ft-lb)**.

Installing the Kickstand

For each cutting unit, secure the kickstand ③ to the chain bracket ① with the snapper pin ②.

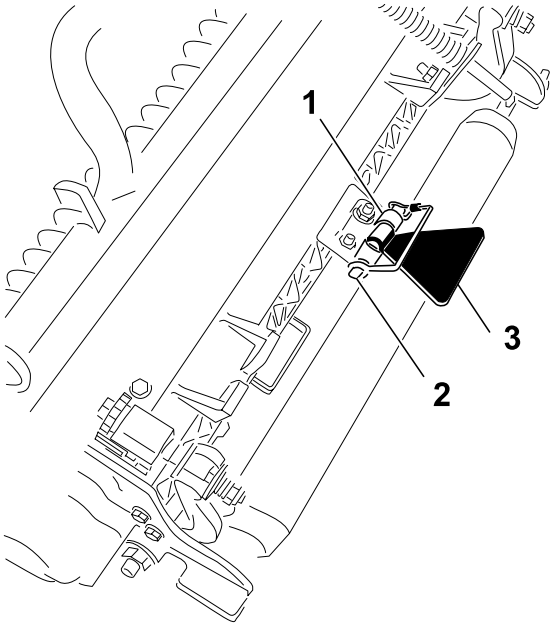

G411001

Installing the Front Cutting Units to the Lift Arms

1. Install the front cutting units to the lift arms as shown.
2. Lock the cutting-unit pivot for cutting grass on a hill side.

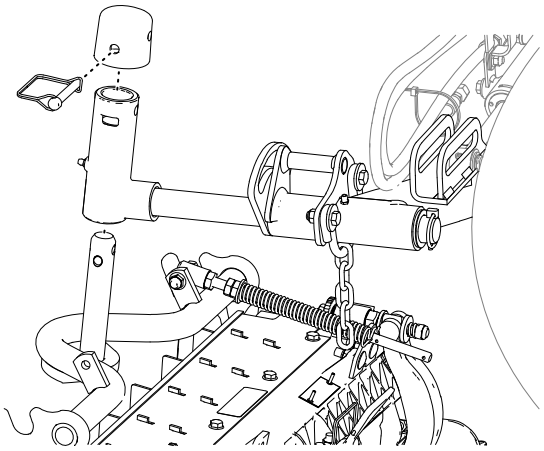

G402695

Installing the Rear Cutting Units to the Lift Arms

Cutting Units adjusted for a 1.2 cm (3/4 inch) or Higher Height of Cut

1. Install the rear cutting units to the lift arms as shown.
2. Lock the cutting-unit pivot for cutting grass on a hill side.

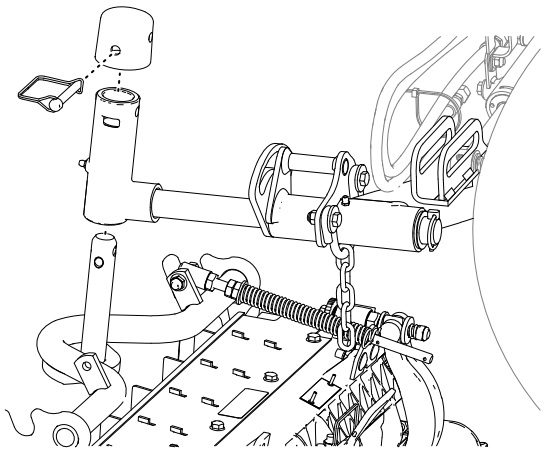

G402695

Installing the Rear Cutting Units to the Lift Arms

Cutting Units adjusted for a 1.2 cm (3/4 inch) or Lower Height of Cut

1. Remove the lynch pin ① and washer ④ securing the to the pivot yoke ③ to the lift arm ② , and slide the shaft out of the lift arm.

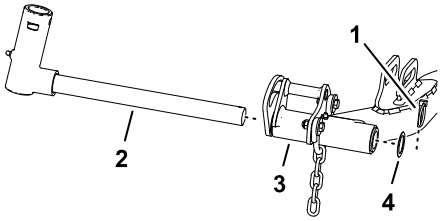

G402723

2. Assemble the pivot yoke ③ onto the carrier frame shaft ④.
3. Assemble the cap ② to the pivot yoke, and align the holes in the carrier frame shaft, pivot yoke, and cap.
4. Secure the pivot yoke and cap to the carrier frame shaft with the snapper pin ①.
5. Lock the cutting-unit pivot for cutting grass on a hill side.
6. Slide a cutting unit under the lift arm.

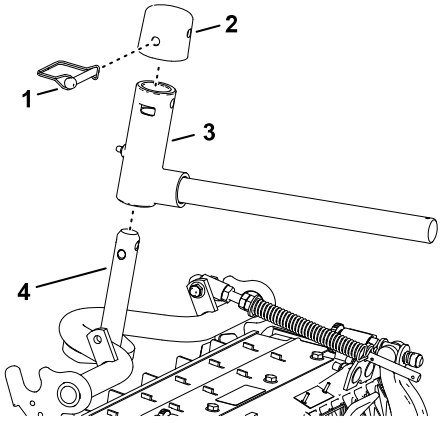

G402724

7. Insert the pivot yoke into the lift arm ③, and secure the lift-arm shaft ② to the lift arm with the lynch pin ① and washer ④.
8. Repeat this procedure for the other rear cutting unit.

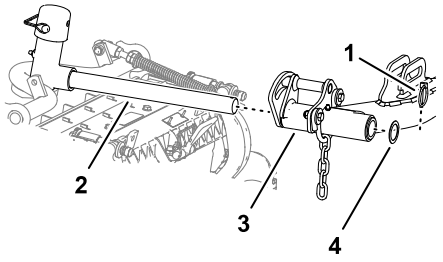

G402725

Locking the Cutting-Unit Pivot for Cutting Grass on a Hill Side

Lock the cutting-unit pivots with snapper pins ① to prevent the cutting units from rotating downhill when cutting across the face of a hill.

Note: Use the hole ② in the pivot yoke to lock the cutting unit.

Note: Use the slot ③ for a steering cutting unit.

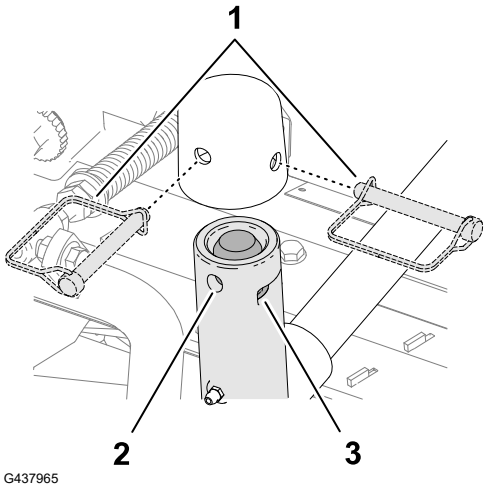

G437965

Installing the Cutting Unit Lift-Arm Chains

Secure the lift-arm chain ① to the chain bracket ② with the snapper pin ③.

Note: Use the number of chain links described in the cutting unit *Operator's Manual*.

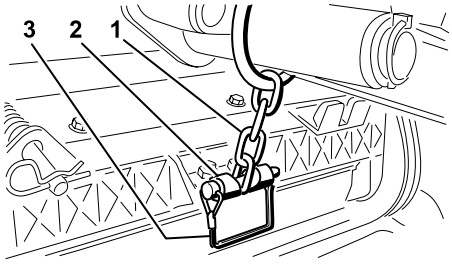

G402673

Installing the Reel Motors

1. Grease the reel-motor spline shaft.
2. Oil the reel motor O-ring and install it onto the motor flange.
3. Install the motor ① by rotating it clockwise so that the motor flanges clear the bolts ②.

Installing the Reel Motors (continued)

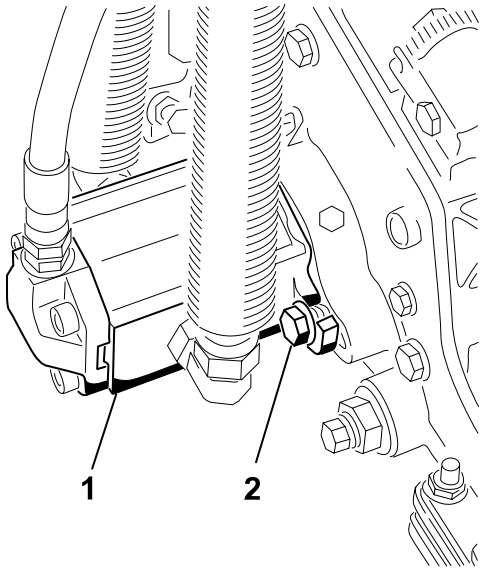

G411002

4. Rotate the motor counterclockwise until the flanges encircle the bolts, and then tighten the bolts.

IMPORTANT

Ensure that the reel motor hoses are not twisted, kinked, or at risk of being pinched.

5. Torque the mounting bolts to **37 to 45 N·m (27 to 33 ft-lb)**.

4 Using the Cutting-Unit Kickstand

Parts Required

1	Cutting-unit kickstand

1. When tipping a cutting unit to expose the bedknife/reel, prop up the rear of the cutting unit with the kickstand ① to ensure that the nuts on the back end of the bedbar adjusting screws are not resting on the work surface.

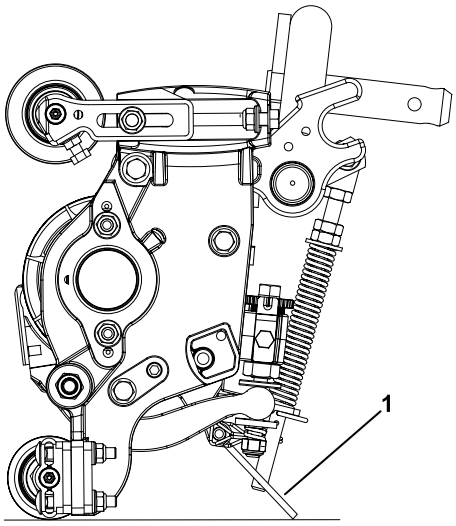

G402676

2. Secure the kickstand ③ to the chain bracket ① with the snapper pin ②.

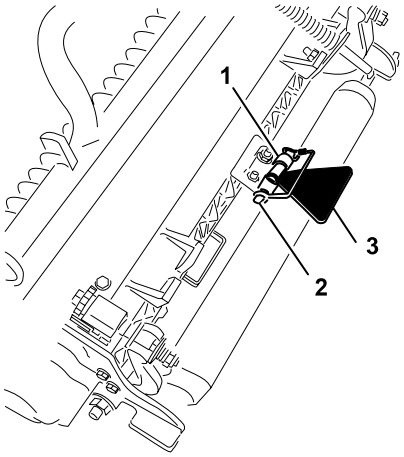

G402677

5 Applying the Production Year Decal

Parts Required

1	Production year decal

1. Use rubbing alcohol and a clean rag to clean the floor bracket area next to the serial plate (2), and allow the bracket to dry.
2. Remove the backing from the year of production decal.
3. Apply the decal (1) to the floor bracket.

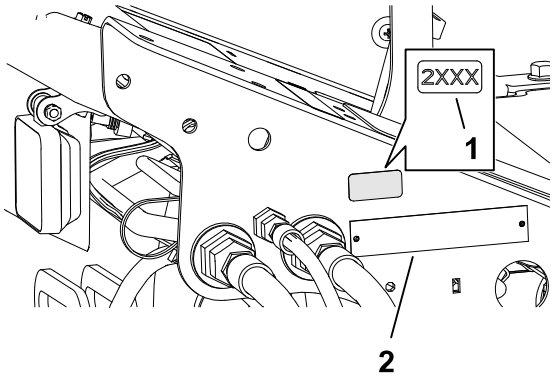

G439131

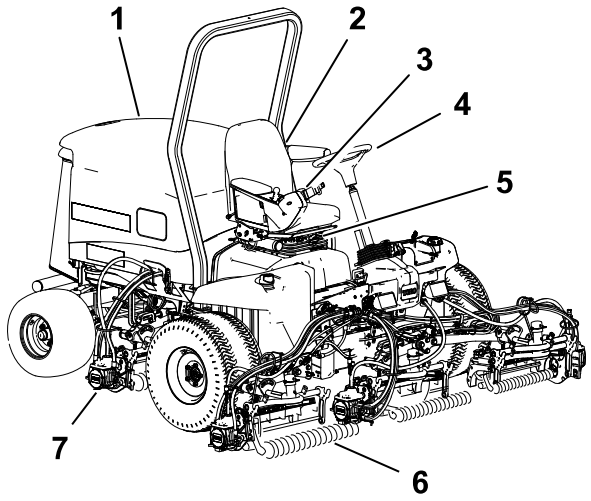

G403840

1. Engine hood
2. Operator's seat
3. Control arm
4. Steering wheel
5. Seat-adjustment lever
6. Front cutting units
7. Rear cutting units

Controls

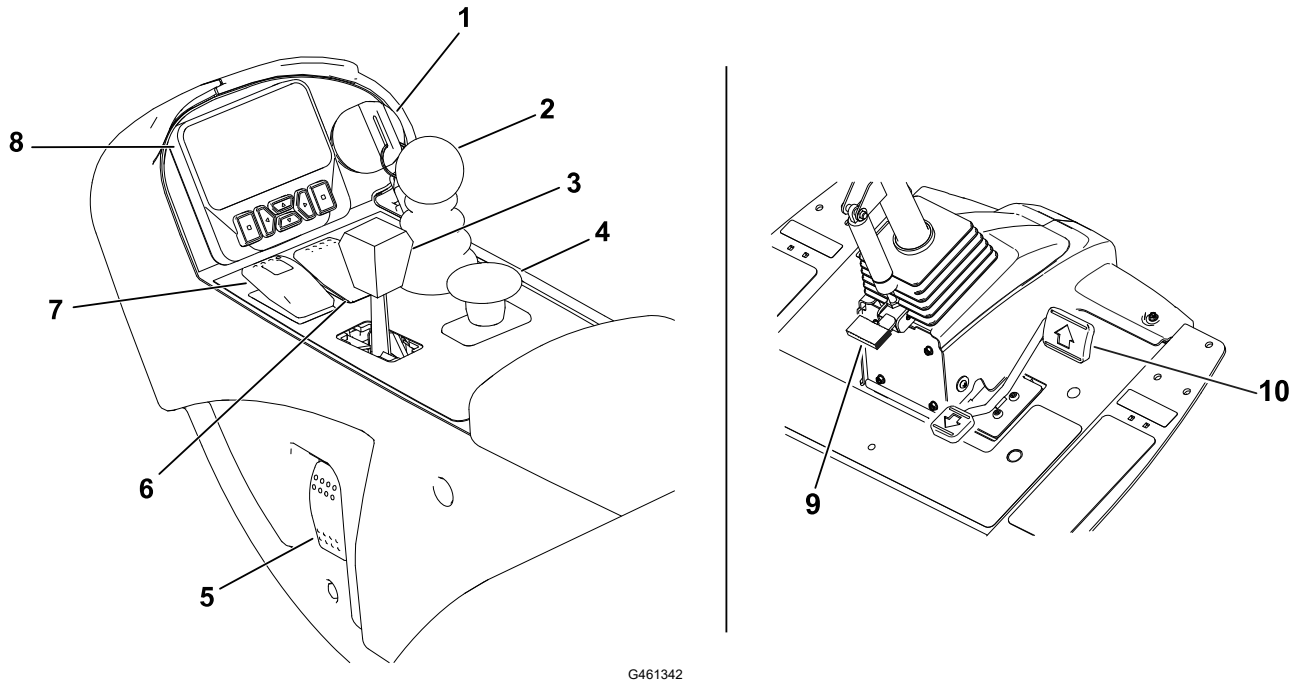

G461342

1. Key switch
2. Lower mow/raise control lever
3. Throttle lever
4. PTO switch
5. Headlight switch
6. Cruise-control switch
7. Parking-brake switch
8. InfoCenter display
9. Tilt-steering pedal
10. Traction pedal

Key Switch

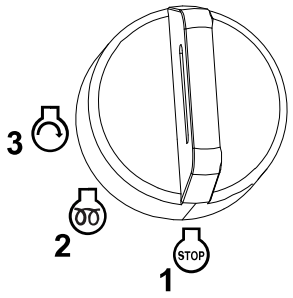

G453721

1 Off

2 On/preheat

3 Start

Lower Mow/Raise Control Lever

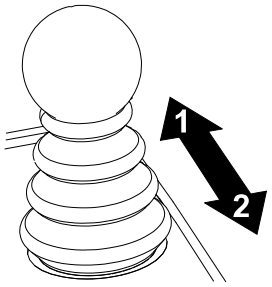

G453725

1 Lower the cutting units—Engage the PTO first for cutting units to spin (Mow mode).

2 Raise the cutting units—Disengage the PTO first for cutting units to stop spinning (Transport mode).

Note: To partially raise the cutting units to the turnaround position, **briefly** pull the lever backward.

Parking-Brake Switch

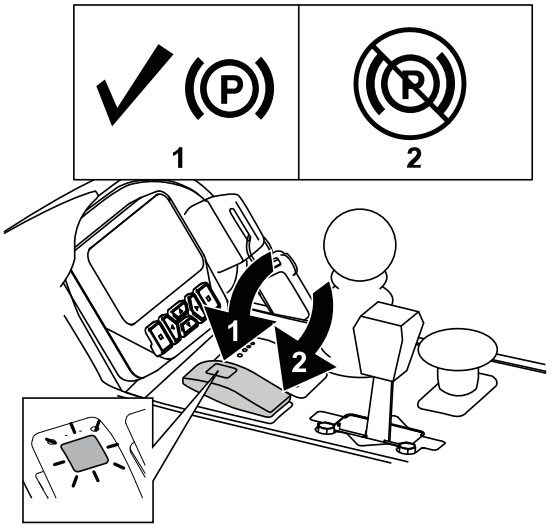

G461391

1 Engage the parking brake.

Note: Activating the parking-brake switch causes the traction to automatically decelerate (regardless of traction pedal position).

The parking brake engages as soon as the machine comes to a stop or is shut off, regardless of the parking-brake switch position.

2 Disengage the parking brake.

Cruise-Control Switch

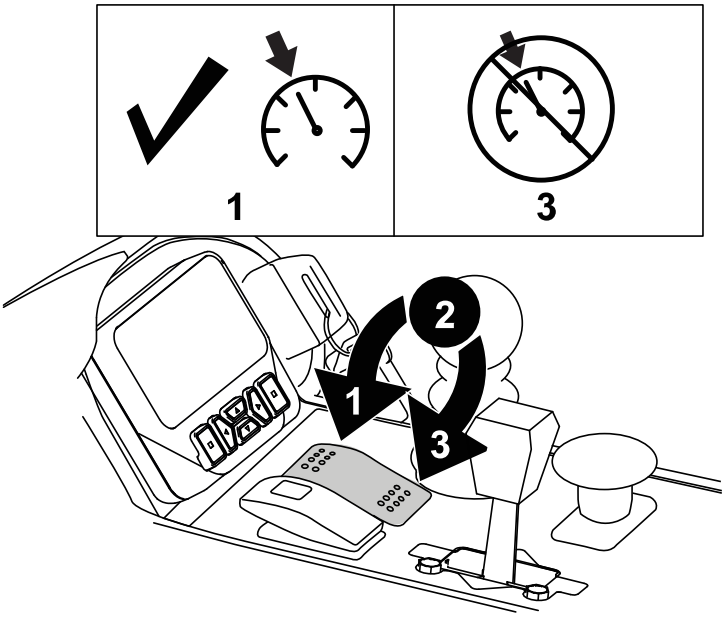

1 Engage cruise control—briefly pivot the switch forward.

Note: Use the display buttons to adjust the cruise control speed in 0.8 km/h (0.5 mph) increments.

2 Turn on cruise control—pivot the switch to the middle position.

3 Turn off cruise control—pivot the switch backward.

Power-Takeoff (PTO) Switch

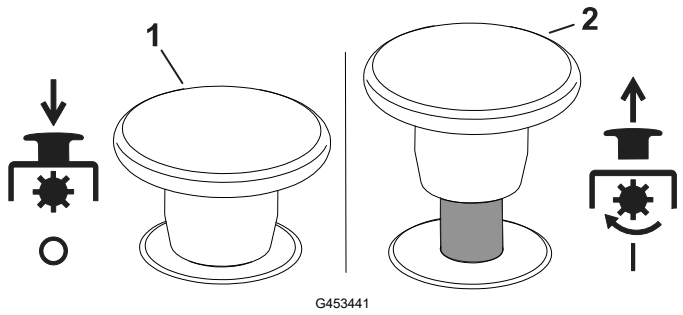

1 Disengage PTO—The machine is in TRANSPORT mode (allows you to drive up to 16 km/h (10 mph) when the maximum speed is not limited).

2 Engage PTO—The machine is in MOW mode (allows you to drive up to 13 km/h (8 mph) when the maximum speed is not limited).

Note: Use the protected menus in the InfoCenter display to set the maximum speed for each mode.

Headlight Switch

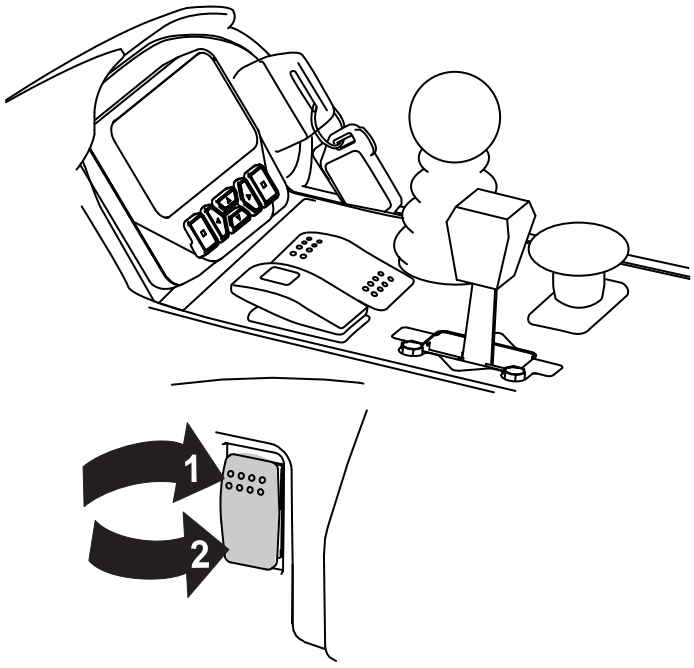

G461395

1 On

2 Off

Throttle-Control Lever

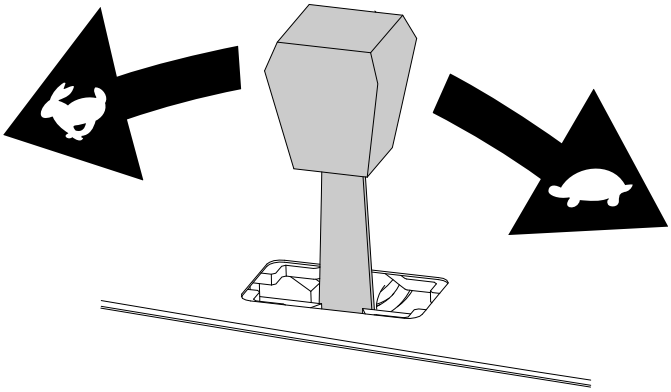

G447509

Move the throttle-control lever forward to increase the engine speed and rearward to decrease speed.

InfoCenter Display

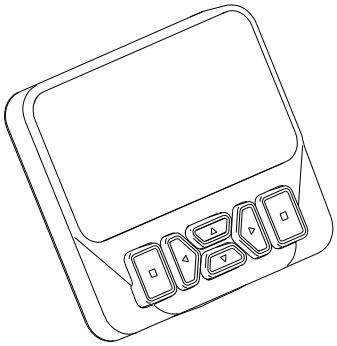

G461392

The InfoCenter display shows information about your machine, such as the operating status, various diagnostics, and other information about the machine.

The screens that display, depend on which buttons you select. The purpose of each button may change depending on what is required at the time.

Tilt-Steering Pedal

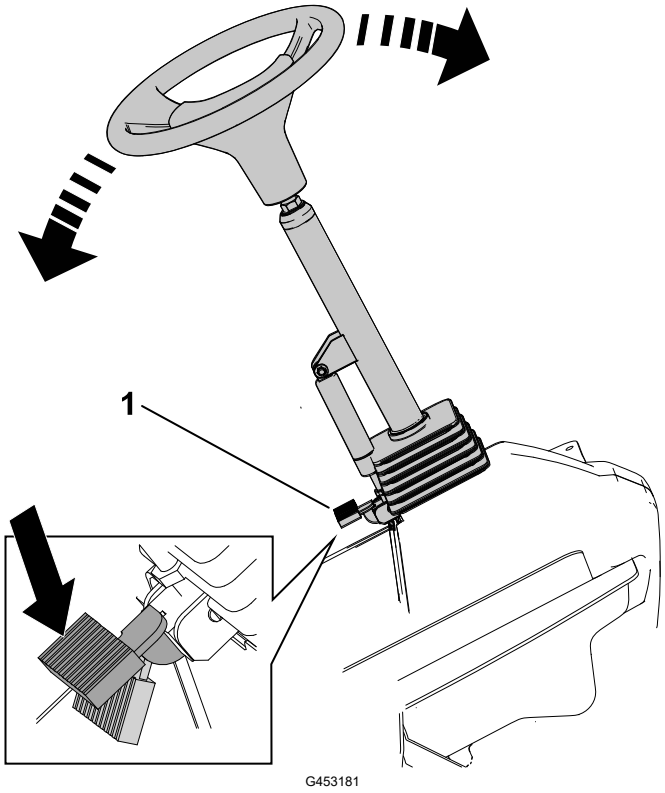

Press the tilt-steering pedal 1 and raise or lower the steering tower to a comfortable operating position.

Traction Pedal

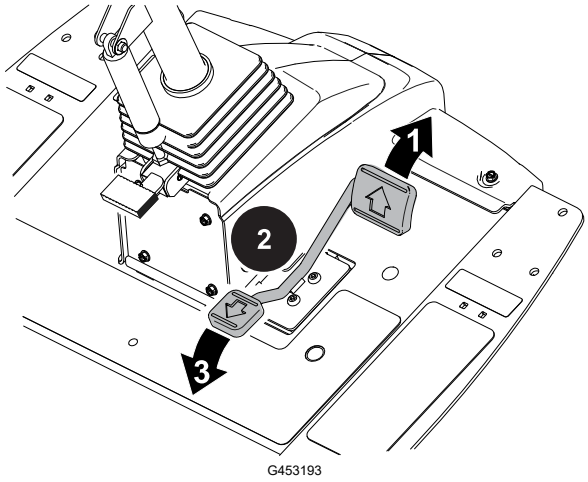

1 Move forward—press the top of the pedal.

Note: To achieve no load, maximum ground speed, fully press the top of the pedal while the throttle is in the FAST position.

2 Stop the machine—reduce foot pressure on the pedal and allow it to return to the center (neutral) position.

3 Move backward—press the bottom of the pedal.

Note: Ground speed depends on how far you press the pedal.

Hydraulic-Filter-Restriction Indicator

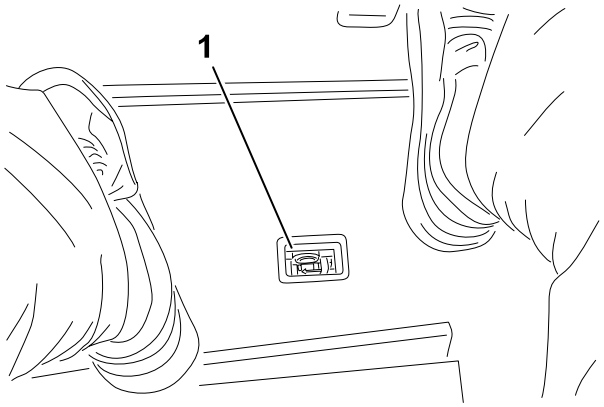

The hydraulic-filter-restriction indicator 1 alerts you when the hydraulic filters must be changed.

Power Point

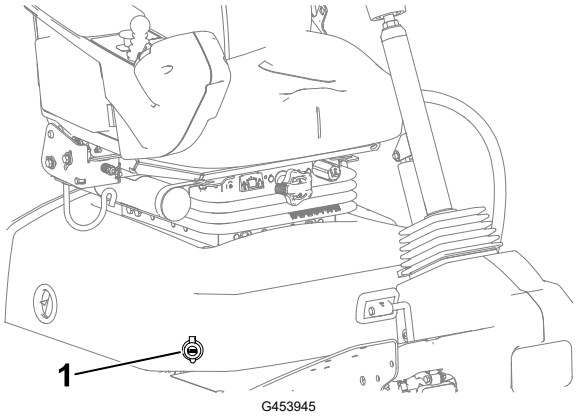

The power point 1 is a 12 V power supply for electronic devices.

Seat Controls

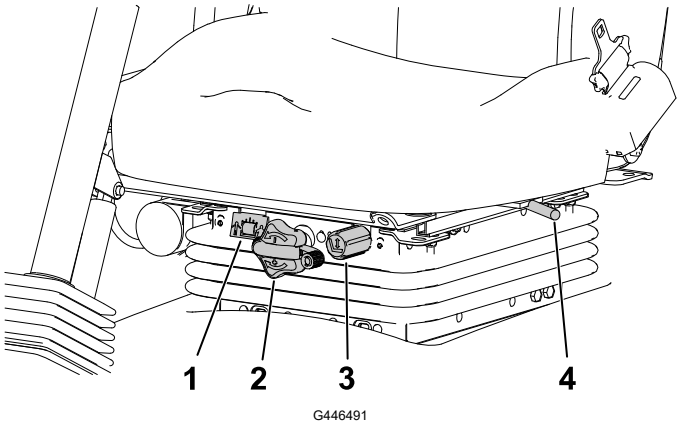

1 Weight gauge

2 Weight-adjustment knob

3 Height-adjustment knob

4 Forward/backward lever

Seat Controls (continued)

Weight-Adjustment Knob

Rotate the weight-adjustment knob until your weight is displayed in the window of the weight gauge.

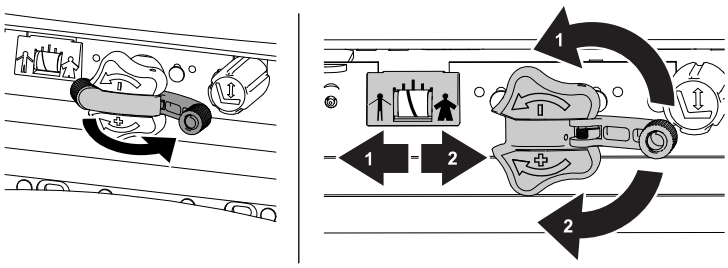

G446496

1 Decrease

2 Increase

Height-Adjustment Knob

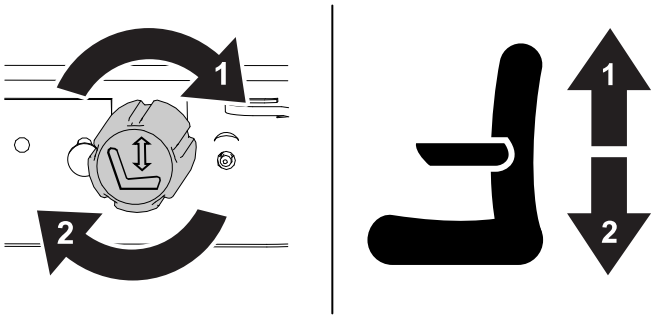

G446494

1 Raise

2 Lower

Forward/Backward Lever

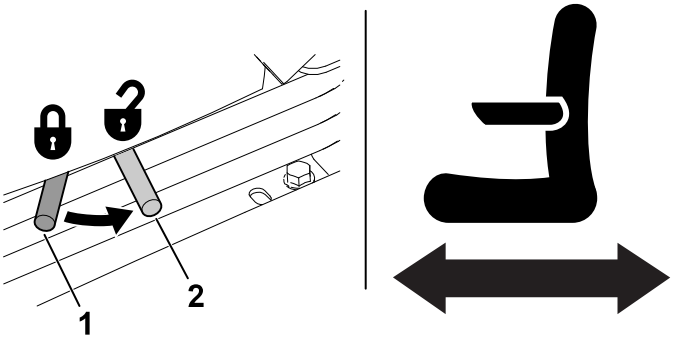

G446495

1 Lock

2 Unlock

Backlap Levers

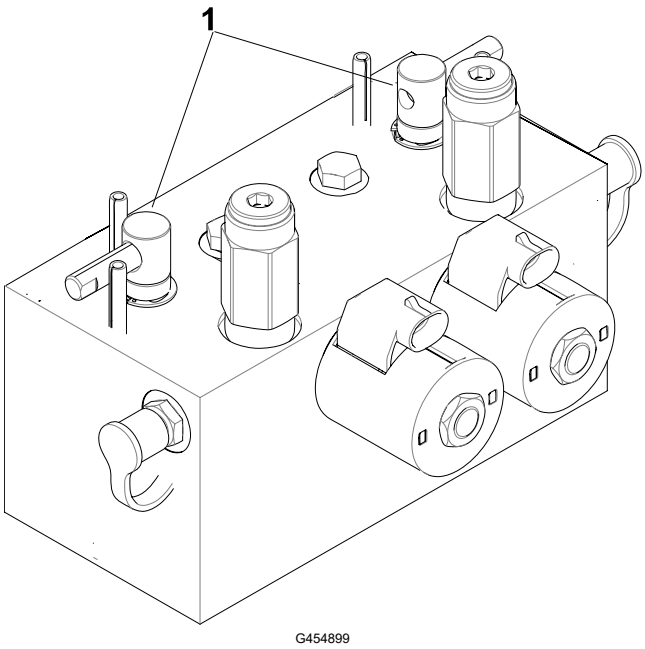

Use the backlap levers [1] in conjunction with the lower mow/raise control lever for backlapping the reels.

Specifications

Note: Specifications and design are subject to change without notice.

Transport width	233 cm (92 inches)
Width of cut	254 cm (100 inches)
Length	282 cm (111 inches)
Height	160 cm (63 inches)
Weight	1222 kg (2,693 lb)
Engine	Kubota 35.5 hp
Fuel tank capacity	53 L (14 US gallons)
Transport speed	0 to 16 km/h (0 to 10 mph)
Mowing speed	0 to 13 km/h (0 to 8 mph)

Attachments/Accessories

A selection of Toro approved attachments and accessories is available for use with the machine to enhance and expand its capabilities. Contact your Authorized Service Dealer or authorized Toro distributor or go to www.Toro.com for a list of all approved attachments and accessories.

To ensure optimum performance and continued safety certification of the machine, use only genuine Toro replacement parts and accessories.

Before Operation

Performing Daily Maintenance

Before starting the machine each day, perform the Each Use/Daily procedures listed in the Maintenance Schedule.

Fuel

Fuel Specifications

IMPORTANT

Never use kerosene or gasoline instead of diesel fuel.

Petroleum Diesel

Type	Use summer grade diesel fuel (No. 2-D) at temperatures above -7°C (20°F) and winter grade (No. 1-D or No. 1-D/2-D blend) below that temperature. Use of winter grade fuel at lower temperatures provides lower flash point and cold flow characteristics which eases starting and reduces fuel filter plugging. Use of summer grade fuel above -7°C (20°F) contributes toward longer fuel pump life and increased power compared to winter grade fuel.
Sulfur content	Low (<500 ppm) or ultra low (<15 ppm)
Minimum Cetane Rating	40
Storage	Acquire only enough clean, fresh diesel fuel or biodiesel fuel that you will consume within 180 days. Do not use fuel that has been stored for more than 180 days.
Oil and additives	Do not add to the fuel

Fuel (continued)

Biodiesel

Type	This machine can also use a biodiesel-blended fuel of up to B20 (20% biodiesel, 80% petroleum diesel). The petroleum diesel portion should be low or ultra low sulfur. Use B5 (biodisel content of 5%) or lesser blends in cold weather
Minimum Cetane Rating	40
Biodiesel Precautions	Painted surfaces may be damaged by biodiesel blends. Monitor seals, hoses, gaskets in contact with fuel as they may degrade over time. Fuel filter plugging may be expected for a time after converting to biodiesel blended. For more information on biodiesel, contact your authorized Toro distributor.
Storage	Acquire only enough clean, fresh diesel fuel or biodiesel fuel that you will consume within 180 days. Do not use fuel that has been stored for more than 180 days.
Oil and additives	Do not add to the fuel

	Standard	**Location**
Biodiesel fuel must meet:	ASTM D6751	USA
	EN 14214	European Union
Blended fuel must meet:	ASTM D975	USA
	EN 590	European Union

Adding Fuel

1. Park the machine on a level surface, lower the cutting units, shut off the engine, engage the parking brake, and remove the key.
2. Using a clean rag, clean area around fuel-tank cap.
3. Remove the cap (1) from the fuel tank.
4. Fill the tank until the level is 6 to 13 mm (1/4 to 1/2 inch) below the bottom of the filler neck.
5. Install the fuel-tank cap tightly after filling the tank.

   Note: If possible, fill the fuel tank after each use. This minimizes possible buildup of condensation inside the fuel tank.

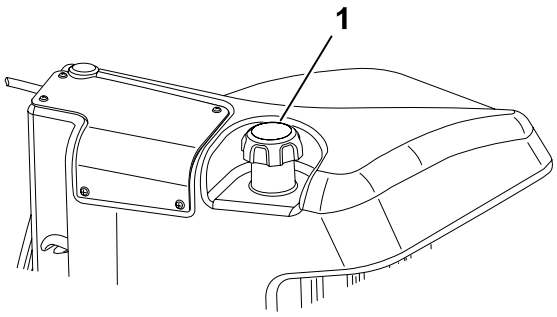

G439612

Checking the Interlock Switches

CAUTION

If safety interlock switches are disconnected or damaged, the machine could operate unexpectedly, resulting in minor or moderate injury.

- **Do not tamper with the interlock switches.**
- **Check the operation of the interlock switches daily and replace any damaged switches before operating the machine.**

IMPORTANT

If your machine fails any of the interlock switch checks, contact your authorized Toro distributor.

Preparing the Machine

1. Drive the machine slowly to an open area.
2. Lower the cutting units, shut off the engine, and engage the parking brake.

Checking the Traction Pedal Start-Interlock

1. Sit in the operator's seat and engage the parking brake.
2. Press the PTO switch to the DISENGAGE position.
3. Press the traction pedal and rotate the key to the START position.

Note: The engine should not start with the traction pedal pressed.

Checking the PTO-Start Interlock

1. Sit in the operator's seat.
2. Press the PTO switch to the ENGAGE position.
3. Rotate the key to the START position.

Note: The engine should not start with the PTO switch in the ENGAGE position.

Checking the PTO-Run Interlock

Note: Do not allow the cutting units to spin for more than a couple seconds during this test to prevent unnecessary wear.

1. Sit in the operator's seat.
2. Press the PTO switch to the DISENGAGE position.
3. Start the engine.

Checking the Interlock Switches (continued)

4. Pull up the PTO switch to the ENGAGE position.
5. Lower the cutting units to engage the PTO.
6. Rise from the seat.

Note: The PTO should not run when you are out of the operator's seat.

Checking the Parking Brake and Traction Pedal Run-Interlock

1. Sit in the operator's seat.
2. Engage the parking brake.
3. Press the PTO switch to the DISENGAGE position.
4. Start the engine.
5. Press the traction pedal.

Note: There should be no machine response when you press the traction pedal while the parking brake is engaged. An advisory message should appear on the InfoCenter display.

Checking the Automatic Parking Brake Engage

1. Sit in the operator's seat and start the engine.
2. Disengage the parking brake and rise from the seat.

Note: The red light on the parking-brake switch should illuminate when you are out of the operator's seat, indicating that the parking brake is on.

Checking the Cutting Unit Lower Disable Interlock

1. Sit in the operator's seat and start the engine.
2. Ensure that the cutting units are lifted to the transport position.
3. Rise from the seat and lower the cutting units.

Note: The cutting units should not lower when you are out of the operator's seat.

Overview of the InfoCenter Display

The InfoCenter display shows information about your machine such as the operating status, various diagnostics and other information about the machine. There are multiple screens on the display. You can switch between the screens, at any time, by pressing the back button and then using the up and down directional buttons.

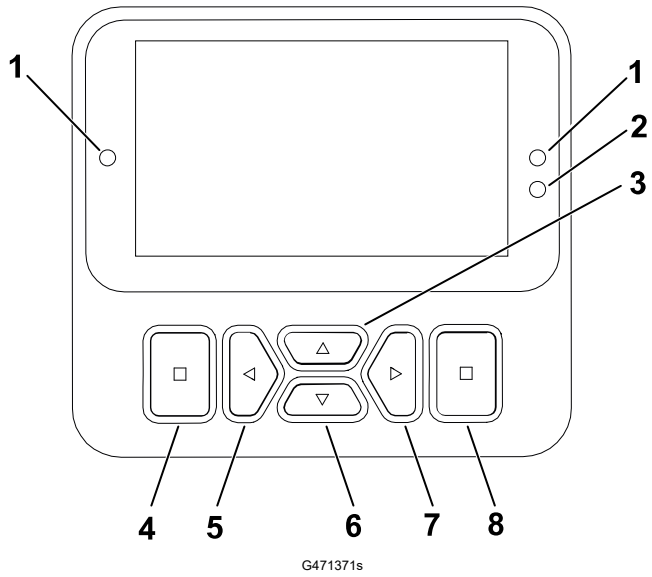

G471371s

1. Indicator light
2. Display brightness sensor
3. Navigation button —up
4. Back button
5. Navigation button —decrease/left
6. Navigation button —down
7. Navigation button —increase/right
8. Enter button

Note: The purpose of each button may change depending on what is required at the time. Each button is labeled with an icon displaying its current function.

InfoCenter Display Icons

	Service is due.
	Virtual pedal stop settings
	The glow plugs are active.
	Sit in the seat.
	The parking brake is engaged.

	Warm-up mode
	Battery voltage
	Fuel level
	Fuel is low.
	Locked

Overview of the InfoCenter Display (continued)

	Engine coolant temperature
	Traction or Traction Pedal
	Start the engine.
	The PTO is engaged.
	The cruise control is engaged.
	Engine
PIN	The passcode has been entered.
	Active
	Inactive
	Menu
	Next screen

	Fault/warning
	Backlap
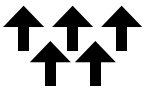	The cutting units are up or raising.
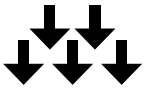	The cutting units are down or lowering.
	Hour meter
	Increase value
	Decrease value
	Scroll up/down
	Scroll left/right
	Previous screen

Overview of the InfoCenter Display (continued)

Overview of the Menus

To access the InfoCenter display menu system, press the back button while at the main screen. This brings you to the main menu. Refer to the following tables for a synopsis of the options available from the menus.

🔒 Protected under Protected Menus—accessible only by entering PIN

Main Menu

Menu Item	Description
Faults	The Faults menu contains a list of the recent machine faults. Refer to the *Service Manual* or contact your authorized Toro distributor for more information on the Faults menu and the information contained there.
Service	The Service menu contains information on the machine such as hours of use, counters, and other similar numbers.
Diagnostics	The Diagnostics menu displays the state of each machine switch, sensor, and control output. You can use this to troubleshoot certain issues as it quickly tells you which machine controls are on and which are off.
Settings	The Settings menu allows you to customize and modify configuration variables on the display.
Machine Settings	The Machine Settings menu allows you to adjust the acceleration, speed, and counterbalance thresholds.
About	The About menu lists the model number, serial number, and software version of your machine.

Service

Menu Item	Description
Hours	Lists the total number of hours that the machine, engine and PTO have been on, as well as the number of hours the machine has been transported and service due.
Counts	Lists numerous counts the machine has experienced.
Service RPM	Sets service RPM.
Traction Pedal 🔒	Calibrates the traction pedal.
Traction Pump 🔒	Calibrates the traction pump.
Virtual Speed Sensor 🔒	Calibrates the virtual speed sensor.

Overview of the InfoCenter Display (continued)

Diagnostics

Menu Item	Description
Traction	Indicates the inputs and outputs for the traction pedal.
Cutting Units	Indicates the inputs and outputs for raising and lowering the cutting units.
PTO	Indicates the inputs and outputs for enabling the PTO circuit.
Engine	Indicates the inputs and outputs for starting the engine.
CAN Statistics 🔒	Indicates the inputs and outputs for the CAN.

Settings

Menu Item	Description
Enter PIN	Allows a person (superintendent/mechanic) authorized by your company with the PIN code to access protected menus.
Backlight	Controls the brightness of the LCD display.
Language	Controls the language used on the display*.
Font Size	Controls the size of the font on the display.
Units	Controls the units used on the display (Imperial or Metric).
Protect Settings 🔒	Allows the ability to change the settings in the protected settings

*Only "operator-faced" text is translated. Faults, Service, and Diagnostics screens are "service-faced." Titles are in the selected language, but menu items are in English.

Machine Settings

Menu Item	Description
Front Backlap	Controls the speed of the front reels in backlap mode.
Rear Backlap	Controls the speed of the rear reels in backlap mode.
Mow Speed 🔒	Controls the maximum speed while in mow (low range). This is used for determining the reel speed.
Transport Speed 🔒	Controls the maximum speed while in transport (high range).

Overview of the InfoCenter Display (continued)

Machine Settings (continued)

Menu Item	Description
Blade Count 🔒	Controls the number of blades on the reel for reel speed.
Height of cut (HOC) 🔒	Controls the height of cut (HOC) for determining the reel speed.
Front Reel Speed 🔒	Displays the calculated reel speed position for the front reels. The reels can also be manually adjusted.
Rear Reel Speed 🔒	Displays the calculated reel speed position for the rear reels. The reels can also be manually adjusted.
Acceleration 🔒	Low, Medium, and High settings control how quickly the traction speed reacts when you move the traction pedal.

About

Menu Item	Description
Model	Lists the model number of the machine.
SN	Lists the serial number of the machine.
S/W Revision	Lists the software revision of the primary controller.
InfoCenter S/W Revision 🔒	Lists the software revision of the InfoCenter.

Accessing Run Screens

1. From the **Main Menu**, press the right navigation button to access the **Main Run Screen** displaying the fuel level and coolant temperature.
2. Press the right navigation button to scroll to the **Secondary Run Screen** displaying the fuel level, coolant temperature, hours, battery voltage, and RPMs.

Protected Menus

There are operating configuration settings that are adjustable within **Settings** of the display. To lock these settings, use the **Protected Menu**.

Note: At the time of delivery, the initial password code is programmed by your distributor.

Accessing Protected Menus

Note: The factory default PIN code for you machine is either `0000` or `1234`.

If you changed the PIN code and forgot the code, contact your authorized Toro distributor for assistance.

Overview of the InfoCenter Display (continued)

1. From the **Main Menu**, scroll down to **Settings** and press the select button.

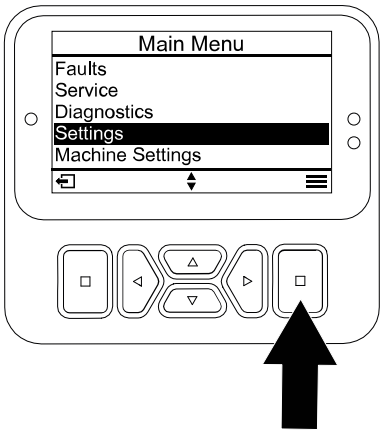

G471349s

2. In **Settings**, scroll to **Enter PIN** and press the select button Ⓐ.
3. To enter the PIN code, press the up/down navigation buttons Ⓑ until the correct first digit appears, then press the right navigation button Ⓒ to move on to the next digit. Repeat this step until the last digit is entered.
4. Press the select button Ⓓ.

   Note: If the display accepts the PIN code and the protected menu is unlocked, the word "PIN" displays in the upper right corner of the screen.
5. To lock the protected menu, rotate the key switch to the OFF position and then to the ON position.

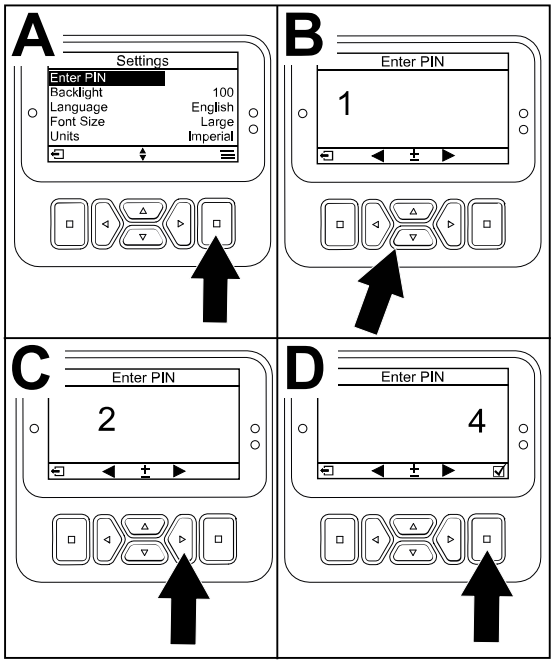

G471350s

Viewing and Changing the Protected Menu Settings

1. In **Settings**, scroll down to **Protect Settings**.
2. To view and change the settings without entering a PIN code, use the select button to change the **Protect Settings** to ☐ (Off).
3. To view and change the settings with a PIN code, use the select button to change the **Protect Settings** to ☑ (On), set the PIN code, and turn the key in the ignition switch to the OFF position and then to the ON position.

Setting the Service Due Timer

The service due timer resets the service due hours after a scheduled maintenance procedure is performed.

1. In **Settings**, scroll to **Enter PIN** and press the select button.
2. Enter PIN; refer to Accessing Protected Menus.
3. In **Service**, navigate to **Hours** and press the select button.
4. Scroll down to **Service Due**.

   Note: If service is currently due, NOW appears next to **Service Due**.
5. Highlight the service interval and press the select button.

   Note: The service interval (250 Hrs, 500 Hrs, etc) is located next to **Service Due**.

   Service interval is a protected menu item.
6. When the RESET SERVICE TIMER? screen appears, press the select button for YES or the back button for NO.
7. After you select YES, the interval screen clears and reverts back to the service hours selections.

Setting the Blade Count

1. In **Machine Settings**, scroll down to **Blade Count**.
2. Press the right navigation button to change the blade count between 8 or 11 blade reels.

Setting the Height of Cut (HOC)

1. In **Machine Settings**, scroll down to **Height of Cut**.
2. Use the left and right navigation buttons to select the HOC setting that matches the bench setting of the cutting units. If the exact setting is not displayed, select the nearest HOC setting from the list displayed.

Setting the Front and Rear Reel Speeds

Although the front and rear reel speeds are calculated by inputting the number of blades, mow speed and HOC into the InfoCenter display, the setting can be manually changed to accommodate for different mowing conditions.

1. To change the **Reel Speed Settings**, scroll down to the F REEL RPM, R REEL RPM, or both.
2. Press the right button to change the reel speed value. As you change the speed setting, the display continues to show the calculated reel speed based on blade count, mow speed and HOC, which was previously entered, but the new value is also displayed.

Setting the Maximum Allowed Mow Speed

The selected setting is displayed as an X on the traction-speed bar graph along with the cruise control and pedal stop settings. An X in a bar denotes that the maximum speed is limited by the supervisor.

Note: This setting is retained in memory and applied to the traction speed until you change it.

Overview of the InfoCenter Display (continued)

1. In **Machine Settings**, scroll down to **Mow Speed**.
2. Use the left and right navigation buttons to increase and decrease the maximum mow speed in 0.8 km/h (0.5 mph) increments between 1.6 and 12.9 km/h (1.0 and 8.0 mph).

Setting the Maximum Allowed Transport Speed

The selected setting is displayed as an X on the traction-speed bar graph along with the cruise control and pedal stop settings. An X in a bar denotes that the maximum speed is limited by the supervisor.

Note: This setting is retained in memory and applied to the traction speed until you change it.

1. In **Machine Settings**, scroll down to **Transport Speed**.
2. Use the left and right navigation buttons to increase and decrease the maximum transport speed in 0.8 km/h (0.5 mph) increments between 8.0 and 16.0 km/h (5.0 and 10.0 mph).

Setting the Acceleration Mode

1. In **Machine Settings**, scroll down to **Acceleration**.
2. Press the right navigation button to switch between LOW, MEDIUM, and HIGH.

Checking the Hydrostatic Braking Distance

Note: This machine will dynamically brake and stop when you return the traction pedal to neutral.

Note: For smooth deceleration, use your foot to slowly control the traction pedal back to neutral. Do not take your foot off the pedal and allow it to snap back to the neutral position unless you intend to stop quickly.

1. Bring the machine to a complete stop approximately 3.7 m (12 ft) from the maximum transport speed of 10 mph.
2. On flat, dry pavement, mark out the start and end of 3.7 m (12 ft).
3. Drive the machine at the maximum transport speed of 16 km/h (10 mph) and remove your foot at the start of the 3.7 m (12 ft).
4. Check if the machine stops within 0.6 m (2 ft) of the end mark (3.7 m or 12 ft).
5. Contact your Toro distributor if the stopping distance of the machine is not within 0.6 m (2 ft) of this distance.

Overview of Displayed Traction Speeds

This machine displays estimated traction speeds in kilometers per hour (km/h) or miles per hour (mph).

Note: The displayed traction speeds are only accurate when the engine speed is set to high idle.

Overview of the InfoCenter Display (continued)

- The instantaneous speed is displayed in the upper left-hand corner of the cruise control and virtual pedal stop screens.
- The traction speeds are estimated, and calibrated to be most accurate at 8.0 km/h (5.0 mph) while mowing. Displayed speeds are accurate when it is 0.8 km/h (0.5 mph) above or below the display speed while driving on dry, flat pavement.
- Contact your authorized Toro distributor if the machine's observed speeds deviate more than 2.4 km/h (1.5 mph) from the displayed speeds.

During Operation

Overview of the Machine Operating Characteristics

- When you remove your foot from the traction pedal, the machine dynamically brakes to a stop.
- The pedal controls are optimized to provide a reactive yet stable response, allowing you to maintain consistent control over rough terrain, while still allowing for quick, smooth braking.
- The maximum speeds set in the PIN protected menu settings are set by the supervisor to limit the machine’s maximum traction speed.
- The achievable traction pedal use, cruise control, and pedal stop traction speeds are all limited by the maximum speeds set in the PIN protected menu.

Machine Operation

- If an obstacle is in the way, lift the cutting units to mow around it.
- When transporting the machine between work areas, shut off the PTO, and raise the cutting units to the fully upward position.
- Always drive slowly in rough areas.
- Never shut off the machine while driving the machine.

Practice Operating the Machine

To get familiar with the features of the machine, practice operating the machine.

1. Lift the cutting units, disengage the parking brake, press the forward traction pedal, and carefully drive to an open area.
2. Practice driving the machine, because it has a hydrostatic transmission and its features can differ from other turf-maintenance machines.
3. Practice moving forward and reverse, and starting and stopping the machine. To stop the machine, remove your foot from the traction pedal and let it return to NEUTRAL.

   Note: When going downhill in the machine, you may need to engage the parking-brake switch or use the reverse pedal to stop.

4. Practice driving around obstacles with the cutting units up and down. Be careful when driving between narrow objects so that you do not damage the machine or cutting units.

Overview of the Traction Pedal

The traction pedal (1) controls the forward and reverse speed of the machine and the dynamic braking when you return it to neutral.

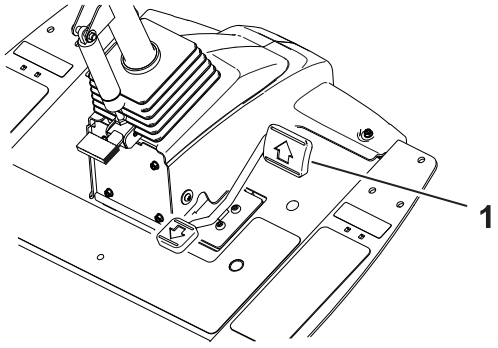

- The further you push the traction pedal in forward or reverse, the faster the machine moves.
- To bring the machine to a smooth stop while transporting or mowing, use your foot to return the traction pedal to neutral at your desired rate.
- To engage maximum braking, remove your foot from the traction pedal, allowing it to return to neutral. The machine dynamically brakes to a stop.

This traction system allows you to customize the acceleration settings for operator comfort and course conditions.

Overview of the Virtual Pedal Stop (VPS) Feature

The virtual pedal stop (VPS) feature allows you to temporarily set a maximum traction speed that is less than the password-protected supervisor maximum traction speed.

To temporarily set the maximum speed of the machine, press the traction pedal fully forward. You can set a separate speed for the mow range and transport range.

- To access this feature, press the up or down navigation button from the main screen.

  Note: This feature reverts back to the supervisor maximum speed settings when the key is switched off.

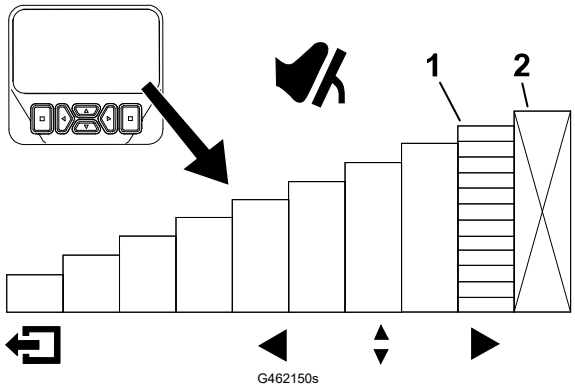

(1) Indicates the maximum traction speed (pedal stop)

(2) This speed is locked out under the protected PIN menu.

- This feature allows you to customize the speed settings for your comfort level, or to customize the speed settings to fit the application.

Overview of the Virtual Pedal Stop (VPS) Feature (continued)

- Whenever the maximum traction speed is changed via the supervisor maximum speed settings or Virtual Pedal Stop, the traction pedal is automatically reprogrammed to use the full pedal stroke between neutral and the new maximum speed. This means the operator gains more precise control of the traction speed at lower maximum speed settings.

Tips for Using Virtual Pedal Stop (VPS)

- Set the max speed temporarily lower for mowing the cleanup pass on the fairway.
- Set the max speed temporarily lower for improved control operating in or near the maintenance shop.
- Set the max speed temporarily lower for improved control loading the machine onto a trailer.

Cruise Control

Cruise Control Operation

The cruise-control switch (1) locks in the cruise control to maintain the desired ground speed. Pressing the rear of the switch turns the cruise control off, the middle position of the switch enables the cruise-control function, and the front of the switch sets the desired ground speed.

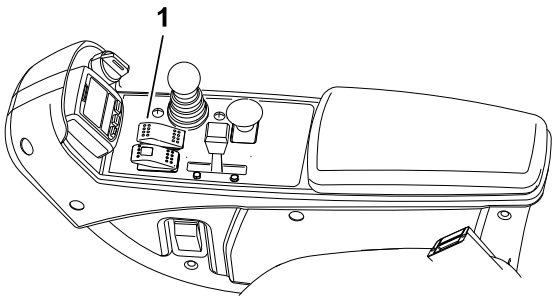

G439039

After the cruise control switch is enabled and the speed is set, use the InfoCenter display to adjust the speed setting of the cruise control.

To disengage the cruise control use the following:

- When in transport range, press the reverse traction pedal, engage the parking brake, or press the cruise control switch to the OFF position.
- When in mow range, press the reverse traction pedal, engage the parking brake, disengage the PTO, or press the cruise control switch to the OFF position.

  Note: Disengaging cruise control results in the machine dynamically braking to a stop. If you would like to disengage cruise control but continue driving, press the traction pedal and then disengage the cruise control for a smooth transition from cruise control to manual speed control.

Adjusting the Cruise Control Speed

1. Enable the cruise control switch on the console.
2. Use the InfoCenter display to adjust the speed setting of the cruise control.

Cruise Control (continued)

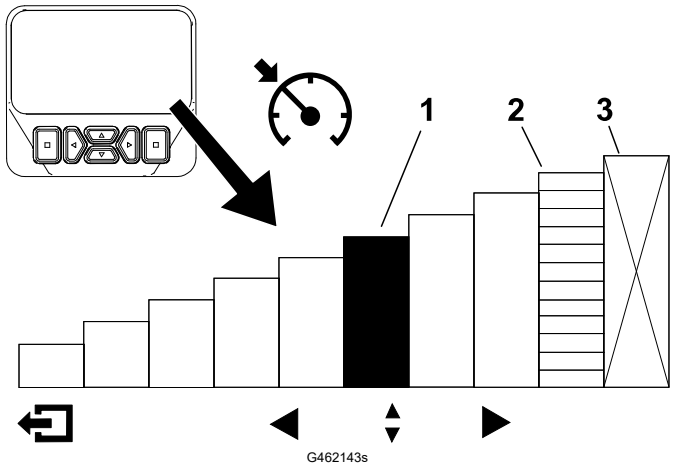

1. Indicates the cruise control speed
2. Indicates the maximum traction speed (pedal stop)
3. This speed is locked out under the protected PIN menu.

Tips for Using the Cruise Control

- Set a cruising speed for long distances without many obstacles.
- On rough terrain, use the InfoCenter display to control the speed.
- Use the cruise control for turnarounds as follows:
  1. While mowing, set a safe, comfortable speed for turning around at the end of mowing passes.
  2. Press the traction pedal to increase the speed for mowing during the mowing pass.
  3. Take your foot off the pedal when turning around for the next mowing pass.
  4. The machine will slow down to the low cruise control setting, allowing you to make an efficient turnaround at a constant speed.
  5. After turning around, use the traction pedal to increase the machine speed back up for the next mowing pass.

Overview of the Acceleration Mode

This feature determines how quickly the machine changes traction speed when the traction pedal is not in the NEUTRAL position.

Note: If you take your foot off the traction pedal, allowing it to return to the NEUTRAL position while the machine is moving, the braking profile is engaged. The braking profile is always the same and cannot be customized by the acceleration mode feature.

Enter the protected menus on the InfoCenter display to change the acceleration mode. The acceleration mode has the following 3 positions:

- LOW—least aggressive acceleration and deceleration
- MEDIUM (default)—medium acceleration and deceleration
- HIGH—most aggressive acceleration and deceleration

Overview of the Warm-Up Mode

When starting the machine in cold weather, a message and a snowflake icon appear on the InfoCenter screen. Do not operate the machine above low idle until after the warm-up period.

Starting the Engine

IMPORTANT

You must bleed the fuel system before starting the engine if you are starting the engine for the first time, the engine has stopped due to lack of fuel, or you have performed maintenance on the fuel system.

1. Sit on the seat, keep your foot off the traction pedal so that it is in NEUTRAL, engage the parking brake, set the throttle to the FAST position, and ensure that the PTO is not engaged.
2. Turn the key to the ON/PREHEAT position.

   An automatic timer controls the glow plug preheat for 6 seconds.
3. After preheating the glow plugs, turn the key to the START position.

   Note: Crank the engine for no longer than 15 seconds. Release the key when the engine starts. If additional preheating is required, turn the key to the OFF position and then to the ON/PREHEAT position. Repeat this process as required.
4. Run the engine at low idle speed until it warms up.

Shutting Off the Engine

1. Move all controls to NEUTRAL, engage the parking brake, move the throttle to the low idle position and allow the engine to reach low idle speed.

IMPORTANT

Allow the engine to idle for 5 minutes before shutting it off after a full load operation. Failure to do so may damage engine components.

2. Turn the key to the OFF position and remove it from the switch.

Adjusting the Turf-Compensation Spring

The turf-compensation spring transfers the weight from the front roller to the rear roller. This helps to reduce a wave pattern in the turf, also known as marcelling or bobbing.

Adjusting the Turf-Compensation Spring (continued)

IMPORTANT

Make spring adjustments with the cutting unit mounted to the traction unit, pointing straight ahead and lowered to the ground.

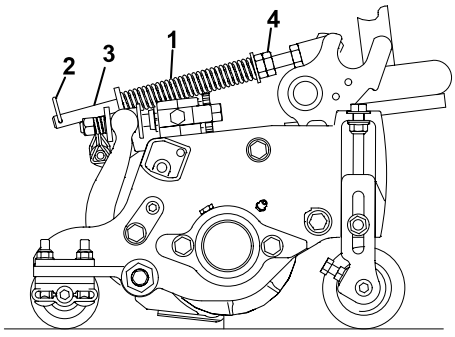

G402845

1. Make sure that the hairpin ② is installed in the rear hole in the spring rod ③.

   Note: When servicing the cutting unit, move the hairpin to the spring-rod hole next to the turf-compensation spring ①.

2. Tighten the hex nuts ④ on the front end of the spring rod until the compressed length of the spring is 15.9 cm (6.25 inches).

   Note: When operating on rough terrain decrease the spring length by 13 mm (1/2 inch). Ground following will be slightly decreased.

   Note: The turf compensation setting will need to be reset if the HOC setting or the Aggressiveness of Cut setting is changed.

Cutting Grass with the Machine

1. Disengage the parking brake, disengage the PTO, and raise the cutting units.
2. Move the throttle to the FAST position.
3. Drive the machine to the mowing area.
4. Park the machine approximately 6 m (20 feet) off the fairway, facing the intended mowing direction.
5. Lower the cutting units completely with the lift/lower control lever.
6. Engage the PTO.

   Note: The cutting units will not start.

7. Tap the lift/lower control lever rearward to lift the cutting units to the turnaround position.

   Note: Tapping the lift/lower control lever without holding it raises the cutting units to the turnaround position and stops the rotation of the reels until the cutting units are lowered.

8. Using the traction pedal, approach the mowing area slowly.
9. Once you reach the edge of the mowing area to start mowing, lower the cutting units with the lift/lower control lever.

   Note: Practice to ensure the cutting units do not lower early or mow an unintended area.

10. Complete the mowing pass.

Cutting Grass with the Machine (continued)

11. When nearing the opposite edge of the fairway (prior to reaching the edge of the mowing area), tap the lift/lower control lever rearward to lift the cutting units to the turnaround position.
12. Perform a tear-shaped turn to quickly line up for your next pass.
13. Press the lift/lower control lever to automatically lower the cutting units from the turnaround position and continue mowing.
14. After mowing the desired area, follow the perimeter of the area to complete the cleanup mow pass. This will ensure that all of the turf along the edge of the fairway where the cutting units were being lifted and lowered is uniformly cut.

    Note: It is recommended to use the Virtual Pedal Stop (VPS) to temporarily set a lower maximum speed to improve operating control while completing the cleanup pass.

Adjusting the Lift-Arm Counterbalance

Rear Cutting Units

⚠ CAUTION ⚠

The springs are under tension, and adjusting them could result in minor or moderate personal injury.

Use caution when adjusting the springs.

Adjust the amount of counterbalance force applied to the rear cutting-units to help compensate for different turf conditions, and to maintain a uniform height of cut in rough conditions or in areas of thatch buildup.

Adjust counterbalance force of each torsion spring to 1 of 4 settings. Each increment increases or decreases the counterbalance force on the cutting unit by 2.3 kg (5 lb). You can position the springs at the back side of the first spring actuator to remove all counterbalance (fourth position).

Note: To remove all counterbalance force, position the long leg of the torsion spring above the shouldered stud.

1. Park the machine on a level surface, lower the cutting units, shut off the engine, engage the parking brake, and remove the key.
2. Insert the long end of the counterbalance spring (1) into a tube or similar object, and pivot the spring around the shouldered stud (2) to the desired position.
3. Repeat step 2 for the other counterbalance spring.

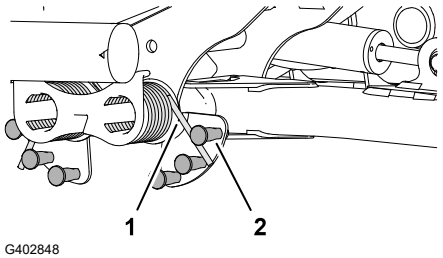

G402848

Adjusting the Lift-Arm Turnaround Position

1. Park the machine on a level surface, lower the cutting units, shut off the engine, engage the parking brake, and remove the key.
2. Locate the lift-arm switch underneath the hydraulic tank and inboard of the cutting unit #5 lift arm.

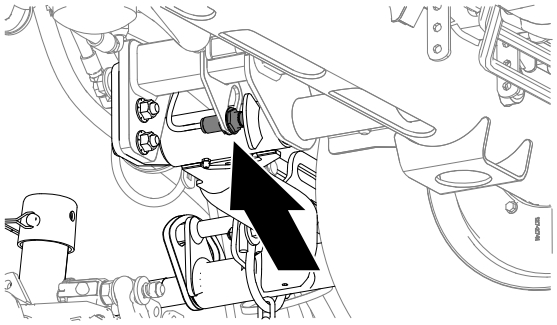

G439043

3. Loosen the jam nut that secures lift-arm switch ① to the switch plate ②.
4. Adjust the lift-arm switch as follows:
   - To increase the lift-arm turnaround height, move the switch down.
   - To decrease the lift-arm turnaround height, move the switch up.

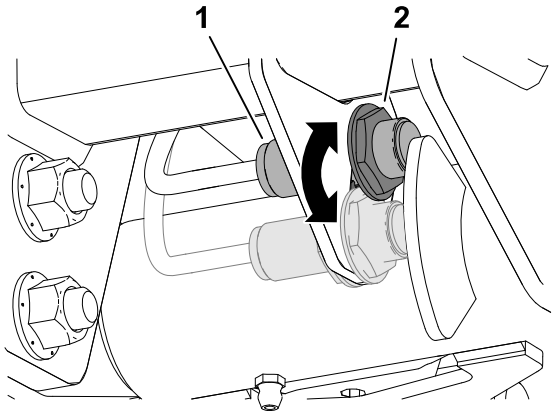

G439054

IMPORTANT

Maintain an air gap of 1.0 to 2.5 mm (0.040 to 0.100 inches) between the switch and the lift-arm trigger. The LED light on the switch verifies proper function of the switch.

5. Torque the jam nuts to **20 +/- 2 N·m (15 +/- 1.5 ft-lb)**.

IMPORTANT

Do not overtorque the jam nuts; otherwise, you may damage the sensor.

Setting the Reel Speed

IMPORTANT

It is important that proper reel speeds are used for your mowing application.

- **Reel speeds that are too slow may result in a wave pattern in the turf, also known as clip marks, marcelling, or bobbing. If this is observed, try increasing the reel speeds or reducing the mowing speed.**
- **Reel speeds that are too fast may result in turf damage and/or premature wear of the reels, bedknives, and other mechanical components.**

To adjust the reel speed manually, complete the following:

1. In **Machine Settings**, enter the blade count, mow speed, and HOC to calculate the proper reel speed.
2. If further adjustments are required, in **Machine Settings** , scroll down to **Front Reel Speed**, **Rear Reel Speed**, or both.
3. Press the right navigation button to change the reel speed value. As the speed setting is changed, the display continues to show the calculated reel speed based on blade count, mow speed, and HOC, but the new value is also shown.

   Note: You may need to increase or decrease the reel speed to compensate for varying turf conditions.

7 inch (178 mm) Reel Speed Chart

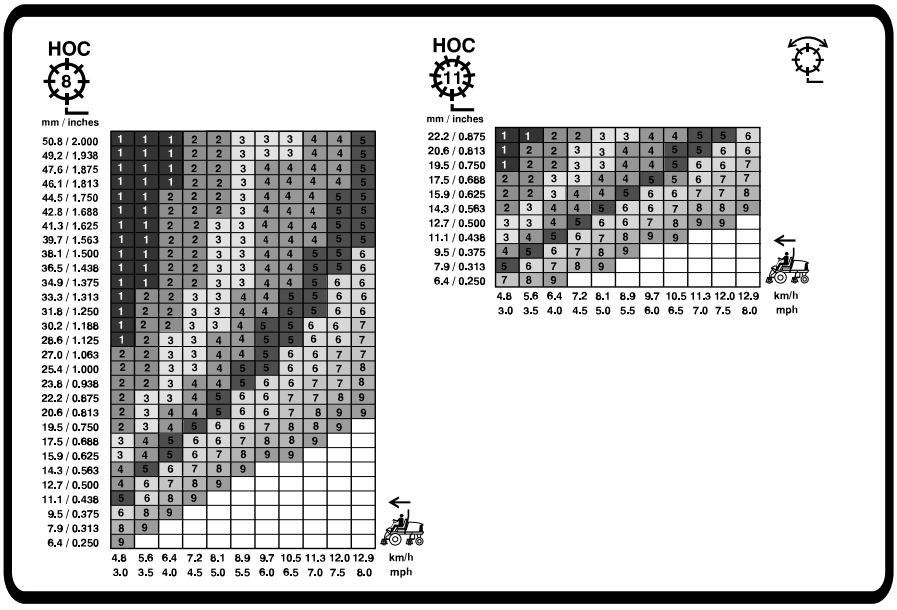

G439056

Overview of the Indicator Lights

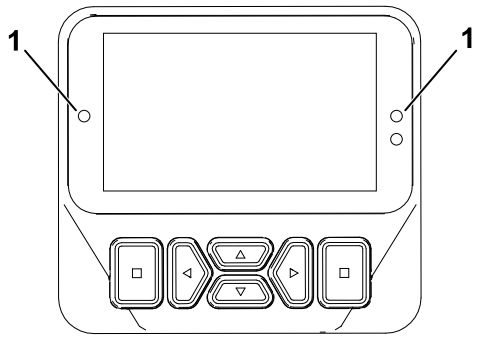

G461477

(1) Indicator light

- Flashing red—active fault
- Solid red—active advisory
- Solid blue—calibration/dialog messages
- Solid green—normal operation

Operating Tips

Becoming Familiar with the Machine

- Before mowing grass, practice operating the machine in an open area.
- Start and shut off the engine.
- Operate in forward and reverse.
- Lower and raise the cutting units and engage and disengage the cutting units.
- When you become more familiar with the machine, practice operating up and down slopes at different speeds.

Overview of the Warning System

If a warning light comes on during operation, stop the machine immediately and correct the problem before continuing operation. Serious damage could occur if you operate the machine with a malfunction.

Overview of Mowing Patterns

This is the most effective method to prevent washboarding.

Change mowing patterns often to minimize a poor after-cut appearance from repeatedly mowing in the same direction.

Operating Tips (continued)

Proper Mowing Techniques

- To achieve the professional straight-line cut and striping that is desirable for some applications, find a tree or other object in the distance and drive straight toward it.
- Maintain reel and bedknife sharpness.
- Maintain proper reel to bedknife clearance. Use light contact.
- Follow and maintain the 1/3rd rule (cut only 1/3 of the grass blade at a time).
- Set reel speed and traction speed to obtain the desired clip length.
- When mowing in wet conditions, open the rear shield of the cutting unit.

Maintaining the Machine after Mowing

Complete the following steps after mowing:

1. Thoroughly wash the machine with a garden hose with no nozzle to avoid contamination and damage to the seals and bearings caused by excessive water pressure.
2. Ensure that the radiator and oil cooler are kept free of dirt or grass clippings.
3. Inspect the machine for possible hydraulic-fluid leaks, damage, or wear to the hydraulic and mechanical components, and check the cutting-unit blades for sharpness.

Scalping, Circle Cutting, and Verticutting

- **Scalping/Circle Cutting**
  - Scalping and circle cutting are considered severe applications. Dedicate reels specifically to these applications.
  - Follow and maintain the 1/3rd rule (cut only 1/3 of the grass blade at a time).
- **Verticutting**
  - For 5-inch verticutters, set the verticutter blade depth to 1/8 inch or less. For 7-inch verticutters, set the blade depth to 1/4 inch or less.
  - Ensure that the cutting-unit blades are sharp, adjusted correctly, and that none of the blades are bent. Dull and bent blades require more power.
  - Adding more blades to reduce the blade spacing increases power consumption.
- **Best Practices for Scalping, Circle Cutting, and Verticutting**
  - Open the rear cutting-unit shields.
  - Recommended maximum mowing speed is 6 km/h (4 mph).
  - Set the reel speeds to setting 6.

    Note: Higher reel speed settings result in less torque. When scalping, better performance and efficiency is achieved at lower reel speed settings.
  - Do not use Economy Mode.
  - Use the InfoCenter display to monitor the engine coolant temperature.

Operating Tips (continued)

- Frequently check the rear radiator screen and the air cleaner air inlet screen above the radiator for chaff build up.
- If the engine overheats, park the machine in a shaded area with good air flow to let the components cool.

Transporting the Machine

Disengage the PTO and raise the cutting units to the TRANSPORT position. Be careful when driving between objects so you do not accidentally damage the machine or cutting units. Use extra care when operating the machine on slopes. Drive slowly and avoid sharp turns on slopes to prevent rollovers. Lower the cutting units when going downhill for steering control.

After Operation

Tie-Down Point Locations

- **Front of the machine**—the hole in the rectangular pad, under the axle tube, inside each front tire.

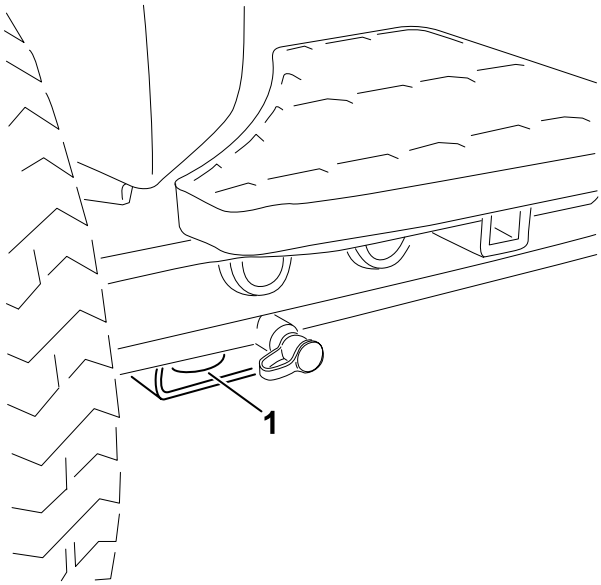

G439095

(1) Front tie-down

- **Rear of the machine**—each side of the machine on the rear frame.

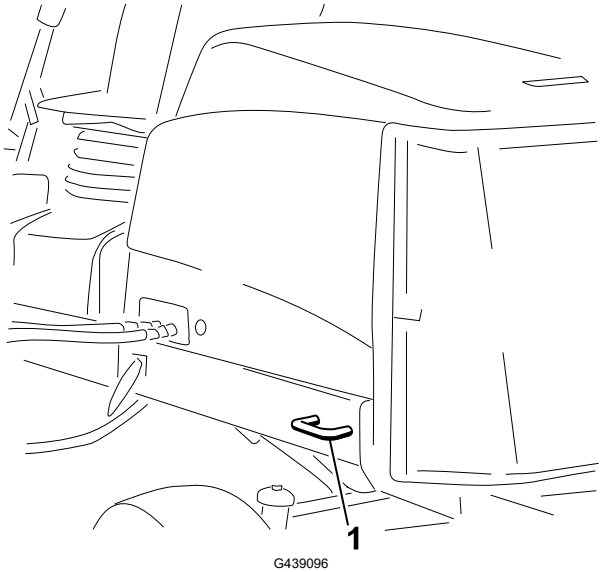

G439096

(1) Rear tie-down

Hauling the Machine

Follow the tips below when hauling the machine.

- Use full-width ramps for loading the machine onto a trailer or truck.
- Tie the machine down securely.

Pushing or Towing the Machine

In an emergency, you can move the machine forward by actuating the bypass valve in the variable-displacement hydraulic pump and pushing or towing the machine.

IMPORTANT

Do not push or tow the machine faster than 3 to 4.8 km/h (2 to 3 mph). If you push or tow at a faster speed, internal transmission damage may occur.

The bypass valves must be open and the brake released whenever you push or tow the machine.

1. Unlatch the seat base and tilt the seat open.
2. Locate the bypass valves under the seat and on the top of the hydrostat.

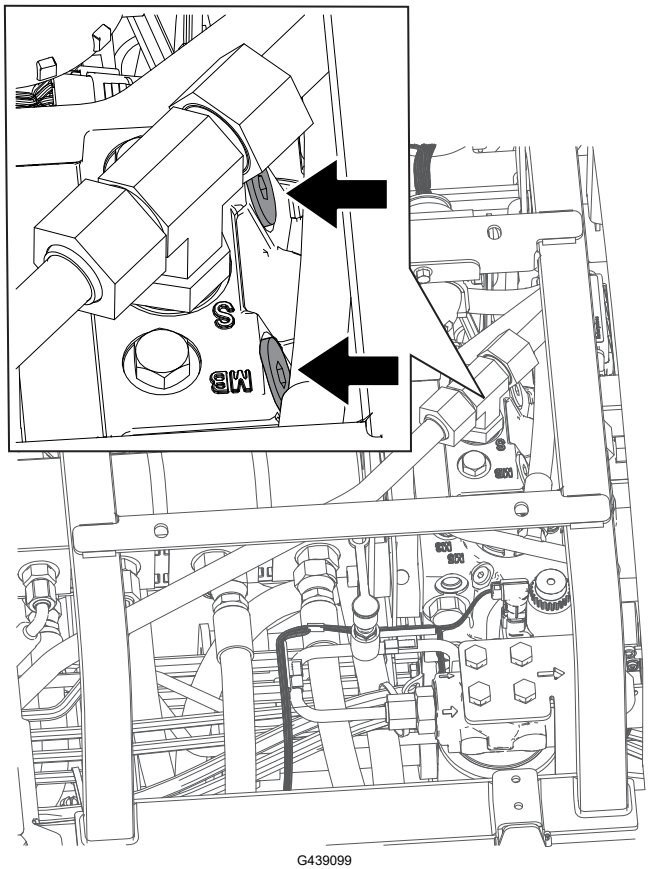

G439099

3. Loosen the valves with 3 turns to allow the oil to bypass internally.

Note: Because the fluid is bypassed, the machine can be moved slowly without damaging the transmission.

4. Locate the brake release manifold near the front right tire and behind the hydraulic tank.
5. Insert a tube or similar object, hold the black knob (2) in on the manifold, and pump (1) the manifold 3 times. As soon as there is substantial resistance when pumping, the brake is released.

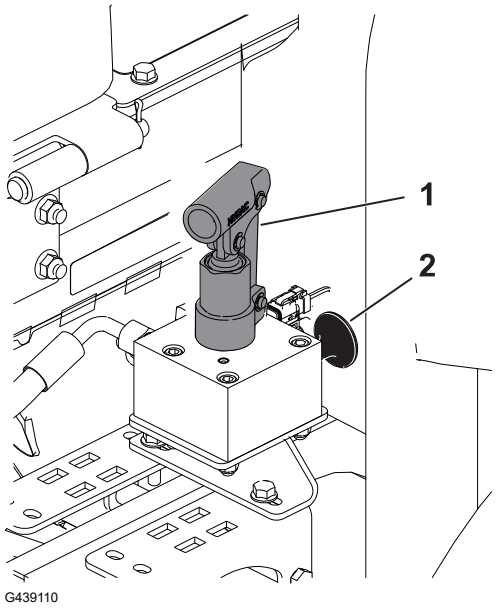

IMPORTANT

Do not pump the manifold after it does not pump easily. Damage could occur if the manifold is pumped too much.

Note: Once the pressure is built up in the manifold, the brake will be released for approximately 60 minutes. If needed after 60 minutes, release the brake again by pumping the manifold.

6. Push or tow the machine.
7. Set the brake by pulling the black knob out or starting the engine.

   Note: The brake automatically resets when you start the engine.

8. Close the bypass valves. Torque the valves to **11 N·m (5 to 8 ft-lb)**.

IMPORTANT

Ensure that the bypass valves are closed before you start operating the machine. Running the engine with an open bypass valve causes the transmission to overheat.

Note: Determine the left and right sides of the machine from the normal operating position.

Note: Download a free copy of the electrical or hydraulic schematic by visiting www.Toro.com and searching for your machine from the Manuals link on the home page.

IMPORTANT

Refer to your engine owner's manual and cutting unit *Operator's Manual* for additional maintenance procedures.

Recommended Maintenance Schedule

Maintenance Service Interval	Maintenance Procedure	Part No.	Qty	Description
After the first hour	Torque the wheel lug nuts to 94 to 122 N·m (70 to 90 ft-lb).	-	-	-
	Torque the front-axle hub nuts to 407 to 542 N·m (300 to 400 ft-lb).	-	-	-
	If the machine is equipped with CrossTrax® AWD, torque the rear-axle hub nuts to 366 to 447 N·m (270 to 330 ft-lb).	-	-	-
After the first 10 hours	Torque the wheel lug nuts to 94 to 122 N·m (70 to 90 ft-lb).	-	-	-
	Torque the front-axle hub nuts to 407 to 542 N·m (300 to 400 ft-lb).	-	-	-
	If the machine is equipped with CrossTrax® AWD, torque the rear-axle hub nuts to 366 to 447 N·m (270 to 330 ft-lb).	-	-	-
After the first 50 hours	Change the engine oil and filter.	108-3841	1	Engine-oil filter
		121-6393	1	10W-30 Premium Engine Oil (5 gallons)
		121-6392	1	10W-30 Premium Engine Oil (55 gallons)
		121-6395	1	15W-40 Premium Engine Oil (5 gallons)

Maintenance Service Interval	Maintenance Procedure	Part No.	Qty	Description
		121-6394	1	15W-40 Premium Engine Oil (55 gallons)
	Check the engine speed (idle and full throttle); refer to the *Service Manual*.	-	-	-
Before each use or daily	Inspect the seat belt(s).	-	-	-
	Check the interlock switches.	-	-	-
	Inspect the Rollover Protection System (ROPS) components for wear or damage.	-	-	-
	Check the air filter.	108-3810	1	Air Cleaner Filter
	Check the engine-oil level.	121-6393	1	10W-30 Premium Engine Oil (5 gallons)
		121-6392	1	10W-30 Premium Engine Oil (55 gallons)
		121-6395	1	15W-40 Premium Engine Oil (5 gallons)
		121-6394	1	15W-40 Premium Engine Oil (55 gallons)
	Drain the water separator.	-	-	-
	Inspect the electrical cables.	-	-	-
	Check the tire pressure.	-	-	-
	Check the engine coolant level.	-	-	-
	Clean the engine cooling system.	-	-	-
	Check the hydraulic fluid level.	133-8086	1	PX Extended Life Hydraulic Fluid (5 gallons)
		133-8087	1	PX Extended Life Hydraulic Fluid (55 gallons)
	Inspect the hydraulic lines and hoses.	-	-	-
	Check the reel-to-bedknife contact.	-	-	-
	Inspect the seat belt(s).	-	-	-
Every 50 hours	Grease the bearings and bushings (and immediately after every washing).	108-1190	1	Premium all-purpose grease (14 oz)
	Clean the battery and check the condition of it (or weekly, whichever comes first).	-	-	-

Maintenance Service Interval	Maintenance Procedure	Part No.	Qty	Description
	Check the battery-cable connections.	-	-	-
Every 100 hours	Inspect the cooling system hoses.	-	-	-
	Check the condition and tension of the alternator belt.	98-9676	1	Alternator belt
Every 150 hours	Change the engine oil and filter.	108-3841	1	Engine-oil filter
		121-6393	1	10W-30 Premium Engine Oil (5 gallons)
		121-6392	1	10W-30 Premium Engine Oil (55 gallons)
		121-6395	1	15W-40 Premium Engine Oil (5 gallons)
		121-6394	1	15W-40 Premium Engine Oil (55 gallons)
Every 250 hours	Torque the wheel lug nuts to 94 to 122 N·m (70 to 90 ft-lb).	-	-	-
	Torque the front-axle hub nuts to 407 to 542 N·m (300 to 400 ft-lb).	-	-	-
	If the machine is equipped with CrossTrax® AWD, torque the rear-axle hub nuts to 366 to 447 N·m (270 to 330 ft-lb).	-	-	-
Every 400 hours	Service the air cleaner (more frequently in extremely dirty or dusty conditions). Service the air cleaner earlier if the air-cleaner indicator shows red.	-	-	-
	Replace the fuel/water separator filter.	110-9049	1	Fuel system water filter
	Inspect the fuel lines and connections.	-	-	-
	Check the engine speed (idle and full throttle); refer to the *Service Manual*.	-	-	-
Every 800 hours	Drain and clean the fuel tank if the fuel system becomes contaminated.	-	-	-
	Check the rear wheel toe-in.	-	-	-
	Replace the hydraulic filters (if you are not using the recommended hydraulic fluid or	75-1310	1	Hydraulic filter
		94-2621	1	Hydraulic filter

Maintenance Service Interval	Maintenance Procedure	Part No.	Qty	Description
	have ever filled the reservoir with an alternative fluid).			
	Change the hydraulic fluid (if you are not using the recommended hydraulic fluid or have ever filled the reservoir with an alternative fluid).	133-8086	1	PX Extended Life Hydraulic Fluid (5 gallons)
		133-8087	1	PX Extended Life Hydraulic Fluid (55 gallons)
	Pack the rear wheel bearings (2 wheel drive machines only); refer to the *Service Manual*.	108-1190	1	Premium all-purpose grease (14 oz)
	Adjust the engine valves (refer to the engine *Service Manual*).	-	-	-
Every 1,000 hours	Replace the hydraulic filters (if you are using the recommended hydraulic fluid).	75-1310	1	Hydraulic filter
		94-2621	1	Hydraulic filter
Every 2,000 hours	Change the hydraulic fluid (if you are using the recommended hydraulic fluid).	133-8086	1	PX Extended Life Hydraulic Fluid (5 gallons)
		133-8087	1	PX Extended Life Hydraulic Fluid (55 gallons)
Before storage	Drain and clean the fuel tank (if you store the machine for an extended period).	-	-	-
Every 2 years	Flush and replace the cooling system fluid (take the machine to an Authorized Service Dealer or Distributor or refer to the *Service Manual*).	-	-	-
	Replace the hydraulic hoses (take the machine to an Authorized Service Dealer or Distributor or refer to the *Service Manual*).	-	-	-
	Replace the coolant hoses (take the machine to an Authorized Service Dealer or Distributor or refer to the *Service Manual*).	-	-	-

Daily Maintenance Checklist

Duplicate this page for routine use.

Maintenance Check Item	For the week of:						
	Mon.	Tues.	Wed.	Thurs.	Fri.	Sat.	Sun.
Check the safety interlock operation.							
Check the brake operation.							
Check the levels of the engine oil and fuel.							
Drain the water/fuel separator.							
Check the air-filter-restriction indicator.							
Check the radiator and screen for debris.							
Check for unusual engine noises.[1]							
Check for unusual operating noises.							
Check the fluid level of the hydraulic system.							
Check the hydraulic-filter indicator.[2]							
Check the hydraulic hoses for damage.							
Check for fluid leaks.							
Check the tire pressure.							
Check the instrument operation.							
Check the reel-to-bedknife adjustment.							
Check the height-of-cut adjustment.							
Check all grease fittings for lubrication.[3]							
Touch-up damaged paint.							

1. Check the glow plug and injector nozzles if the engine starts hard, produces excess smoke, or runs rough.
2. Check with the engine running and the oil at operating temperature.
3. Immediately after every washing, regardless of the interval listed

IMPORTANT

Refer to your engine operator's manual for additional maintenance procedures.

Notation for Areas of Concern

Inspection performed by:		
Item	**Date**	**Information**
1		
2		
3		
4		
5		

Pre-Maintenance Procedures

Preparing for Maintenance

1. Park the machine on a level surface, disengage the PTO, lower the cutting units, and engage the parking brake.
2. Shut off the engine, remove the key, wait for all moving parts to stop, and allow the engine to cool.

Opening the Hood

Release the 2 hood latches (1) and rotate open the hood.

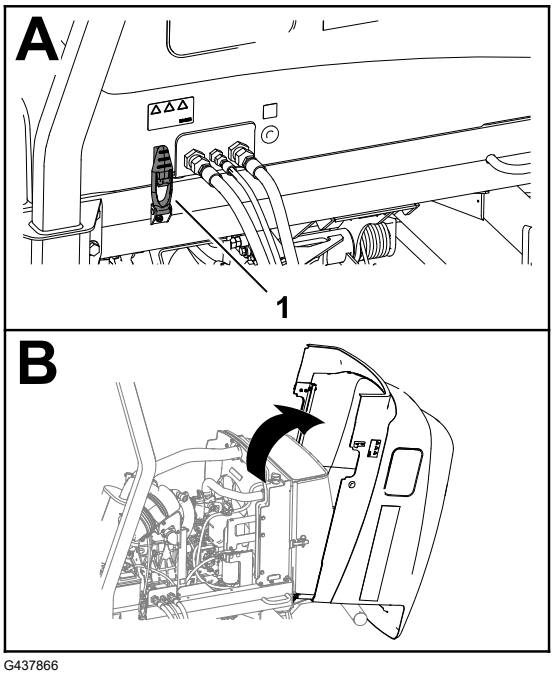

G437866

Closing the Hood

Carefully rotate the hood closed and secure it with the 2 hood latches ①.

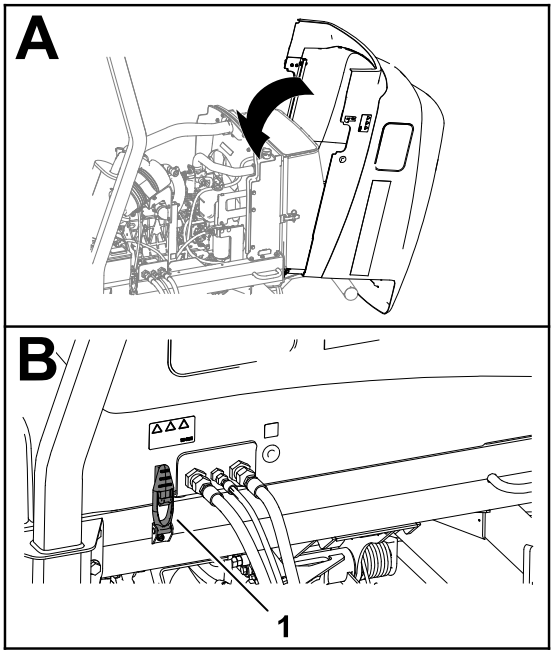

G437871

Opening the Screen

1. Remove the ball pin ① from the screen latch ②.
2. Unlatch and open the screen.

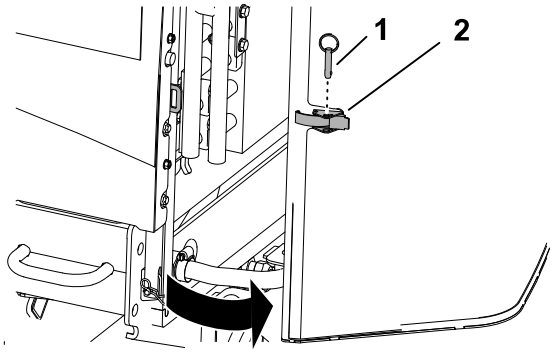

G437850

Closing the Screen

1. Close and latch the screen.
2. Insert the ball pin ① through the screen latch ②.

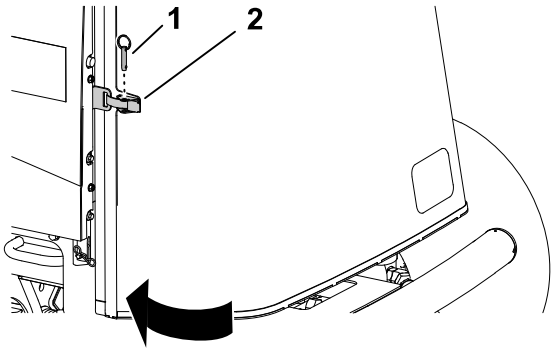

G414734

Tilting the Seat

1. Unlatch the seat base Ⓐ.
2. Tilt the seat and base open Ⓑ.
3. Support it with the prop rods Ⓒ.

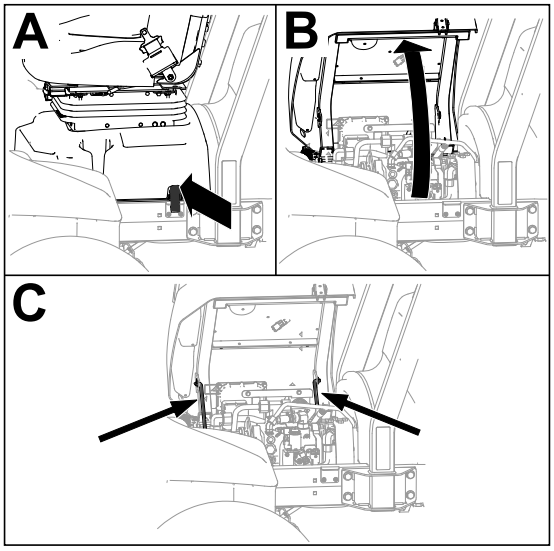

G443836

Lowering the Seat

1. Rotate the seat slightly, and lift the front prop rod out of the dent of the seat-support slot.
2. Carefully lower the seat until it latches securely.

Jacking Point Locations

Note: Support the machine with jack stands whenever you work under the machine.

Use the following as machine-lift points:

- Front—the jack brackets of the front-axle tube.
- Rear—the rear-axle tube.

Jacking Point Locations (continued)

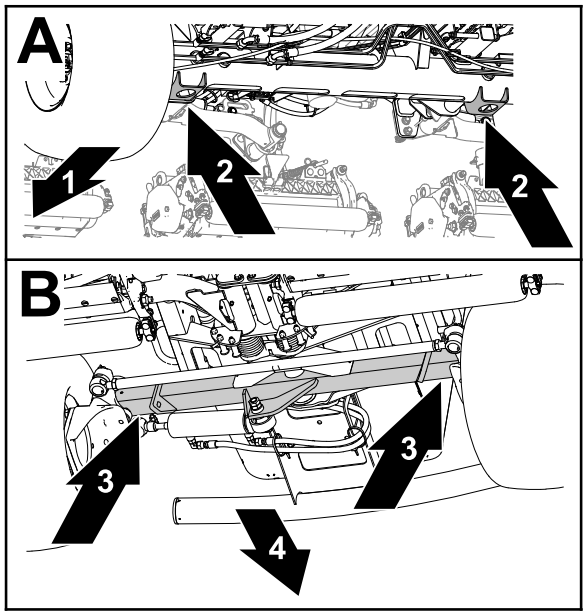

G437877

1. Front of the machine
2. Jack brackets (front-axle tube)
3. Rear-axle tube
4. Back of the machine

Lubrication

Greasing the Bearings and Bushings

The machine has grease fittings that must be lubricated regularly. Dusty and dirty operating conditions could cause dirt to get into the bearings and bushings, resulting in accelerated wear. Lubricate the grease fittings immediately after every washing, regardless of the interval specified.

1. Prepare the machine for maintenance.
2. Grease all machine fittings with No. 2 lithium grease.

Grease Fitting Locations

Grease Specification: No. 2 lithium grease

Pump driveshaft (3)	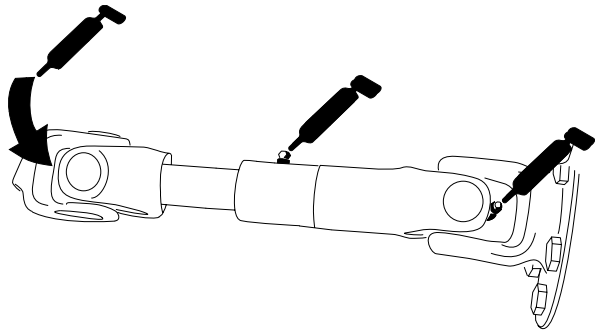 G452381
Cutting-unit lift-arm cylinders (2 each) Lift-arm pivots (1 each)	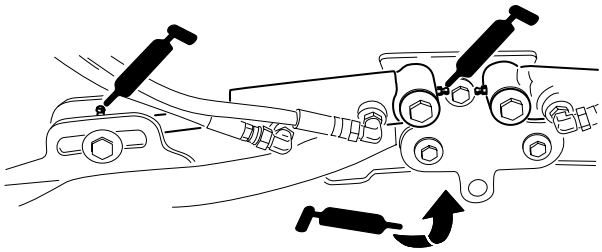 G452355
Cutting-unit carrier-frame and pivot (2 each)	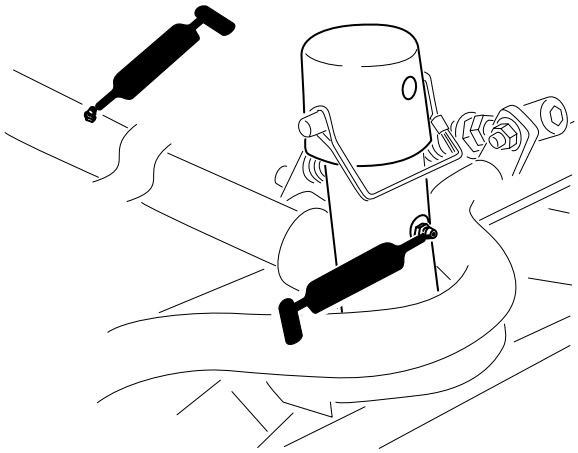 G452356
Lift-arm-pivot shaft (1 each)	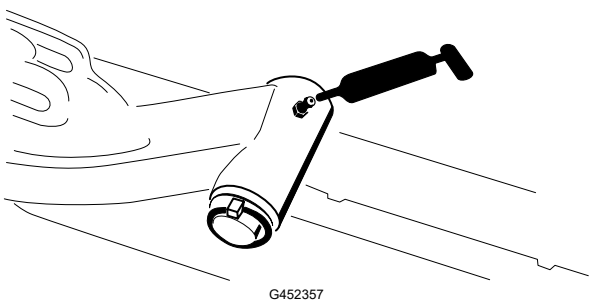 G452357

Greasing the Bearings and Bushings (continued)

Axle-steering pivot (1)	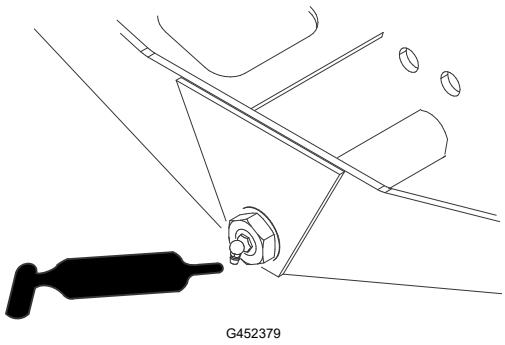 G452379
Steering-cylinder ball joints (2)	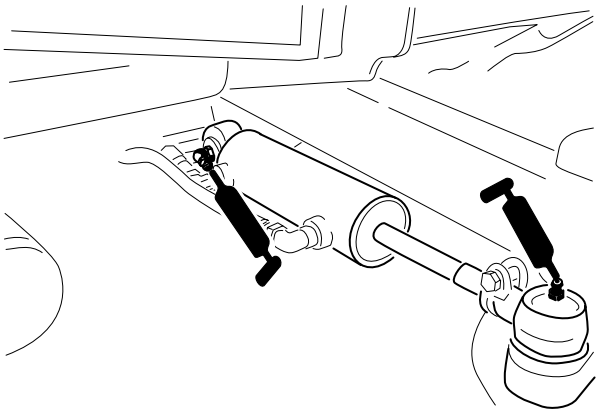 G452380

Engine Maintenance

Checking the Air Cleaner

1. Prepare the machine for maintenance.
2. Open the hood.
3. Check the service indicator (1) at the end of the air filter housing.

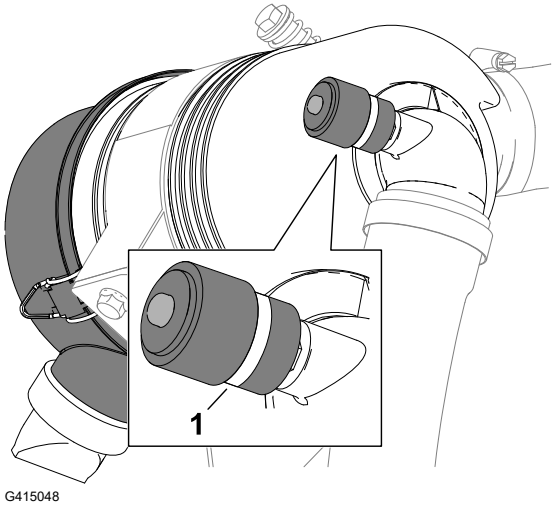

G415048

Checking the Air Cleaner (continued)

4. If a red band displays in the service indicator, change the air filter.
5. Squeeze the dust-ejector valve.
6. Close and latch the hood.

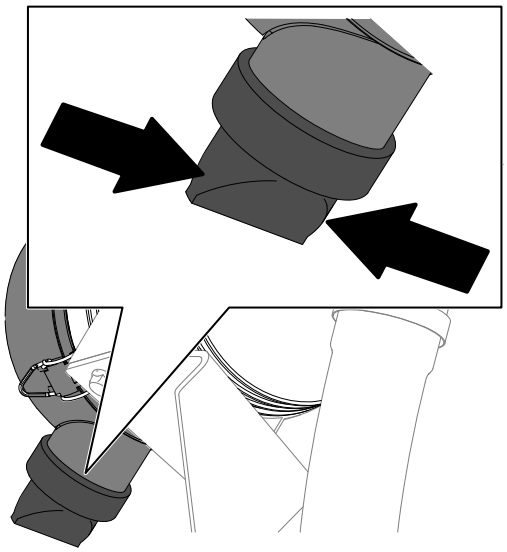

G414762

Resetting the Air Filter Service Indicator

1. If a red band displays in the service indicator, press the reset button at the end of the indicator.
2. Close and latch the hood.

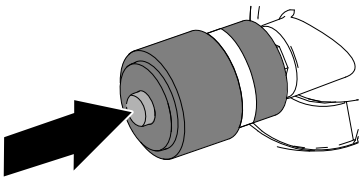

G414765

Servicing the Air Cleaner

- Check the whole intake system for leaks, damage, or loose hose clamps. Do not use a damaged air filter.
- Service the air-cleaner filter only when the service indicator requires it. Changing the air filter before it is necessary only increases the chance of dirt entering the engine when you remove the filter.

IMPORTANT

Make sure that the cover is seated correctly, seals with the air-cleaner body, and the rubber outlet valve is in a downward position—between the 5 o'clock and 7 o'clock positions when viewed from the end.

Servicing the Air Cleaner (continued)

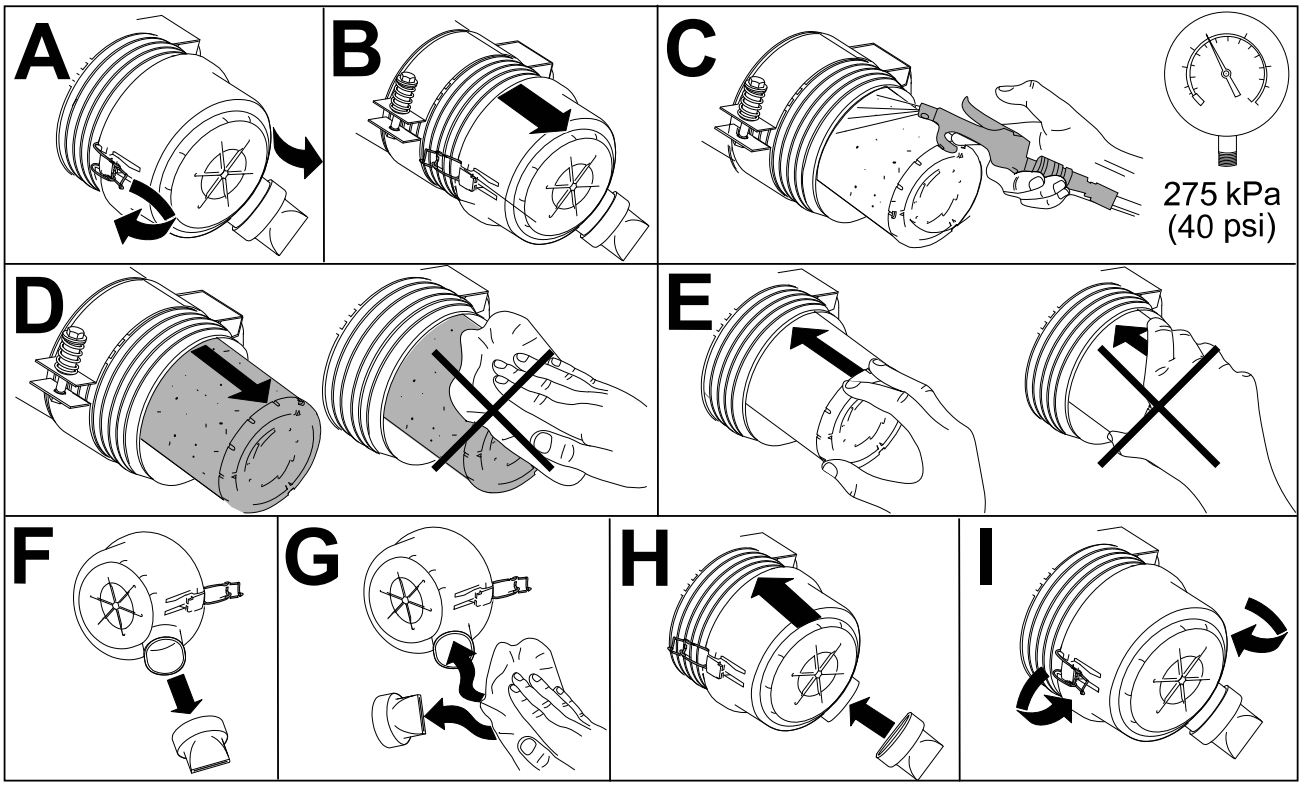

G448875

Engine Oil Specifications

Oil Type

Use high-quality, low-ash engine oil that meets or exceeds API service category CH-4 or higher.

Use the following engine oil viscosity grade:

- Preferred oil: SAE 15W-40 [-17°C (above 0°F)]
- Alternate oil: SAE 10W-30 or 5W-30 (all temperatures)

Toro Premium Engine Oil is available from your authorized Toro distributor in either 15W-40 or 10W-30 viscosity grades.

Crankcase Capacity

Approximately 5.2 L (5.5 US qt) with the filter

Checking the Engine Oil Level

Note: Check the oil when the engine is cool. If the engine is warm, wait 10 minutes before checking.

Checking the Engine Oil Level (continued)

IMPORTANT

Check the engine oil daily. If the engine-oil level is above the Full mark on the dipstick, the engine oil may be diluted with fuel.

If the engine oil level is above the Full mark, change the engine oil.

If the oil level is at or below the Add mark on the dipstick, add oil to bring the oil level to the Full mark. **Do not overfill the engine with oil**.

IMPORTANT

Be sure to keep the level of the engine oil between the upper and lower limits on the oil gauge. Engine failure may occur because of over filling or under filling the engine oil.

1. Prepare the machine for maintenance.
2. Open the hood.
3. Check the level of the engine oil.
4. Close and latch the hood.

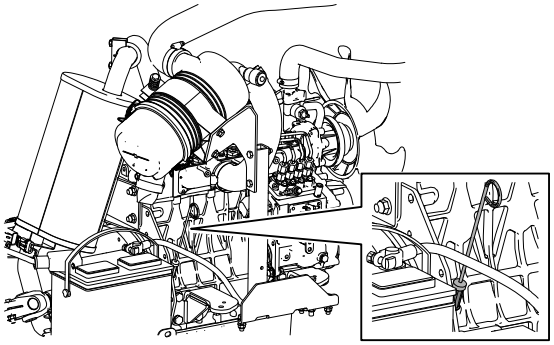

G437898

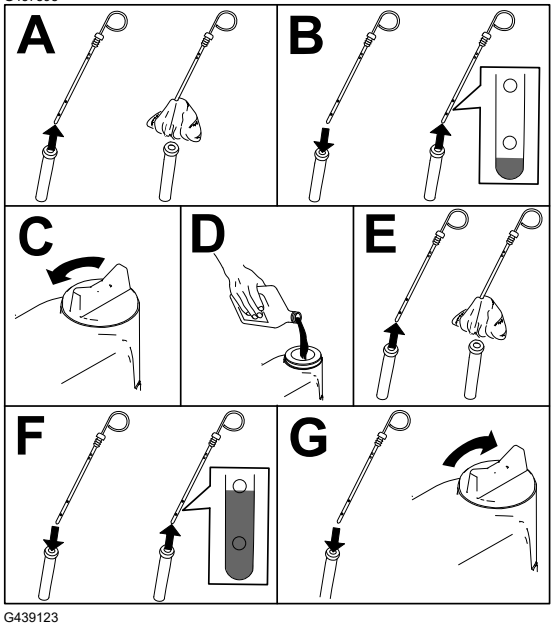

G439123

Changing the Engine Oil and Filter

1. Prepare the machine for maintenance.
2. Drain the oil and change the filter.

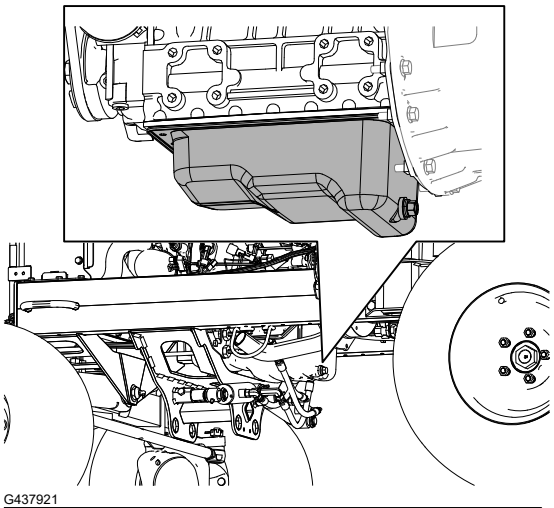

G437921

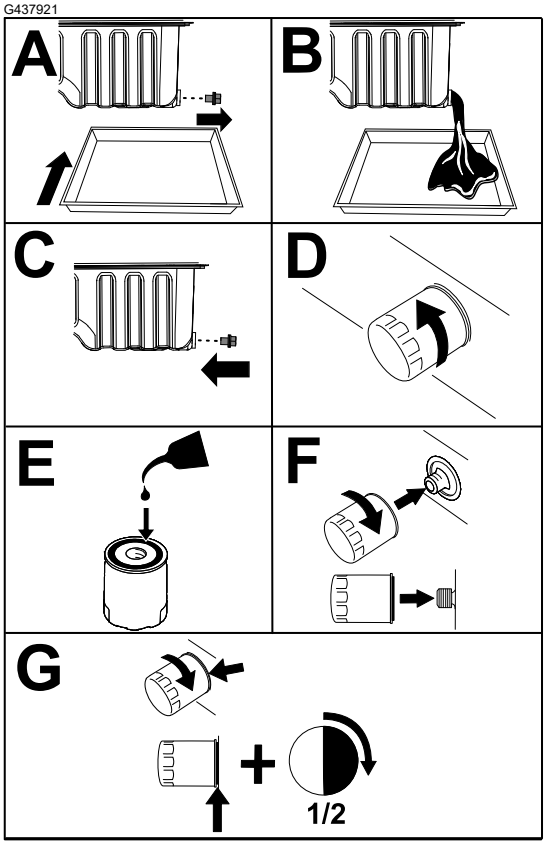

G437919

IMPORTANT

Do not overtighten the filter.

3. Open the hood.
4. Add oil to the crankcase.

5. Close and latch the hood.

Fuel System Maintenance

This *Operator's Manual* contains more detailed fuel and fuel system maintenance information than the engine *Owner's Manual*, which is a general-purpose reference relating to fuel and fuel maintenance.

Ensure that you understand that the fuel system maintenance, fuel storage, and fuel quality require your attention to avoid downtime and extensive engine repairs.

The fuel system has extremely tight tolerances due to the emissions and control requirements. Diesel fuel quality and cleanliness is more important for the longevity of today's high-pressure common rail (HPCR) fuel-injection system used on diesel engines.

IMPORTANT

Water or air in the fuel system will damage your engine! Do not assume that new fuel is clean. Ensure that your fuel is from a quality supplier, store your fuel correctly, and use your fuel supply within 180 days.

IMPORTANT

If you do not follow the procedures for fuel filter replacement, fuel system maintenance, and fuel storage, the engine fuel system could fail prematurely. Perform all fuel system maintenance at the specified intervals or whenever the fuel is contaminated or its quality is poor.

Fuel Storage

Appropriate fuel storage is critical for your engine. Proper maintenance of fuel storage tanks is often overlooked and leads to the contamination of fuel delivered to the machine.

- Acquire only enough fuel that you will consume within 180 days. Do not use fuel that has been stored for more than 180 days. This helps eliminate water and other contaminates in the fuel.
- If you do not remove the water from the storage tank or machine fuel tank, it can lead to rust or contamination in the storage tank and fuel system components. Tank sludge developed by mold, bacteria, or fungus restricts flow and clogs the filter and fuel injectors.
- Inspect your fuel storage tank and machine fuel tank regularly to monitor the fuel quality in the tank.
- Ensure that your fuel comes from a quality supplier.
- If you find water or contaminants in your storage tank or machine fuel tank, work with your fuel provider to correct the problem and perform all fuel system maintenance.
- Do not store diesel fuel in tanks or canisters made with zinc-plated components.

Servicing the Fuel/Water Separator

Draining Water from the Fuel/Water Separator

1. Drain water from the fuel/water separator as shown.

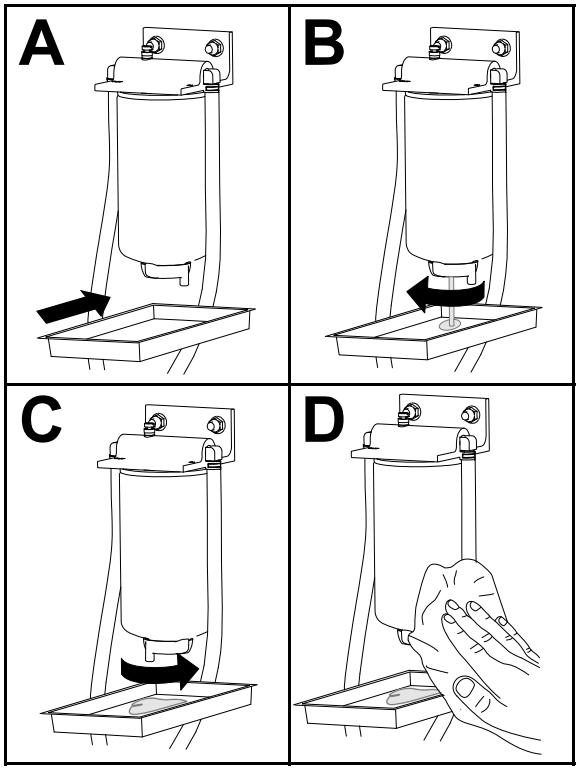

G452998

2. Prime the filter and the lines to the high pressure pump.

Servicing the Fuel/Water Separator (continued)

Replacing the Fuel/Water Separator Filter

1. Replace the filter as shown.

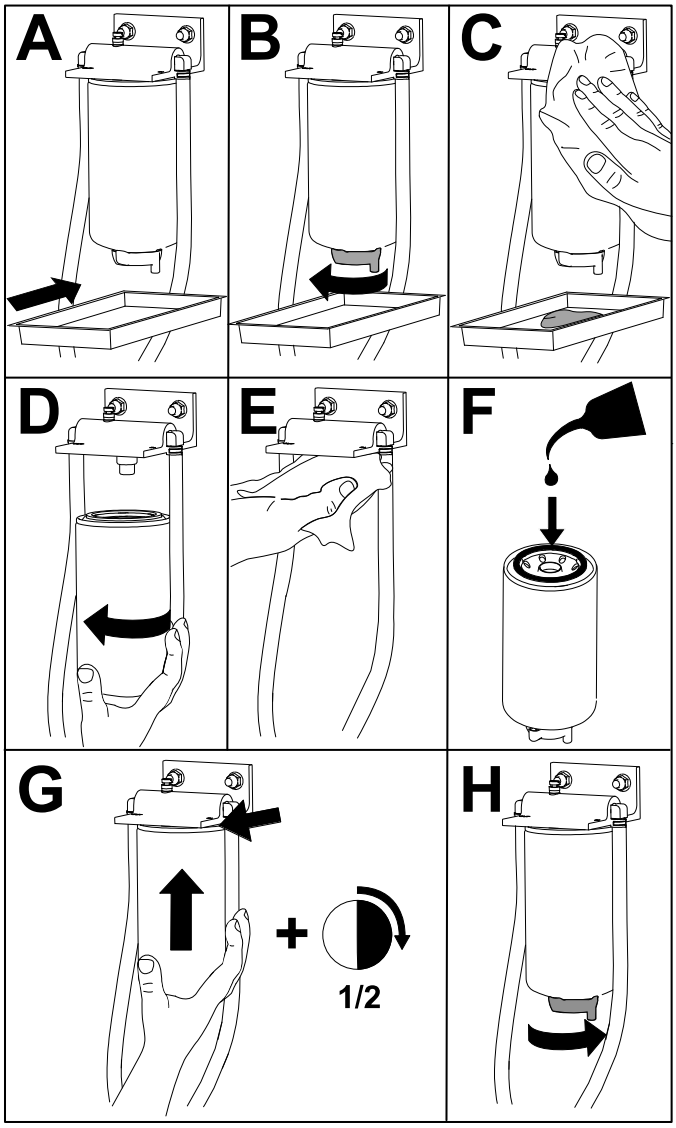

G452996

2. Prime the filter and the lines to the high pressure pump.

Bleeding the Fuel System

1. Prepare the machine for maintenance.
2. Ensure that the fuel tank is at least half full.
3. Open the hood.

Bleeding the Fuel System (continued)

4. Open the air-bleed screw ① on the fuel-injection pump.
5. Turn the ignition key to the ON position.

   Note: The electric fuel pump runs, forcing air out around the air-bleed screw.
6. Tighten the screw and turn the ignition key to the OFF position.
7. Close and latch the hood.

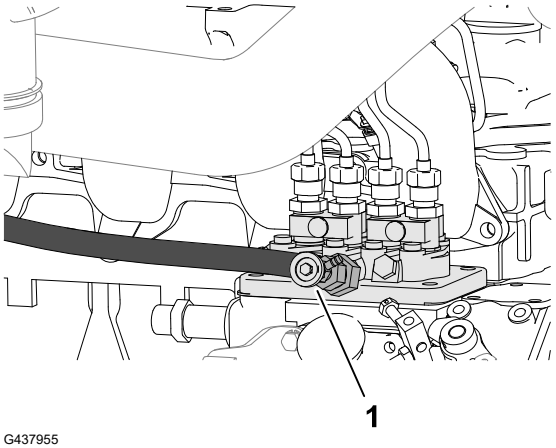

G437955

Draining the Fuel Tank

1. Prepare the machine for maintenance.
2. Align a drain pan under the fuel tank-drain valve ①.
3. Open the drain valve and allow the fuel to drain from the tank.
4. Use clean fuel to flush out the tank.
5. Close the drain valve.

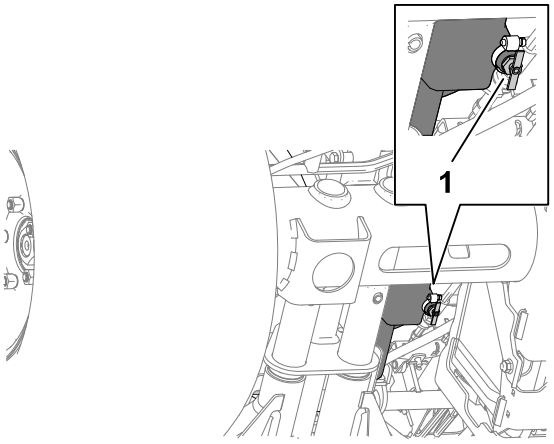

G415054

Inspecting the Fuel Lines and Connections

1. Inspect the fuel lines for deterioration, damage, or loose connections.
2. Replace any deteriorated clamps or hoses.

   Note: Prime the fuel system if you replace any fuel lines.

Cleaning the Fuel-Pickup Tube Screen

Removing the Fuel-Pickup Tube

The fuel-pickup tube, located inside the fuel tank, is equipped with a screen to help prevent debris from entering the fuel system. Remove the fuel-pickup tube and clean the screen as required.

1. Prepare the machine for maintenance.
2. Remove the 5 screws (2) that secure the fuel-sender cover (1) to the fuel tank(3), and remove the cover.

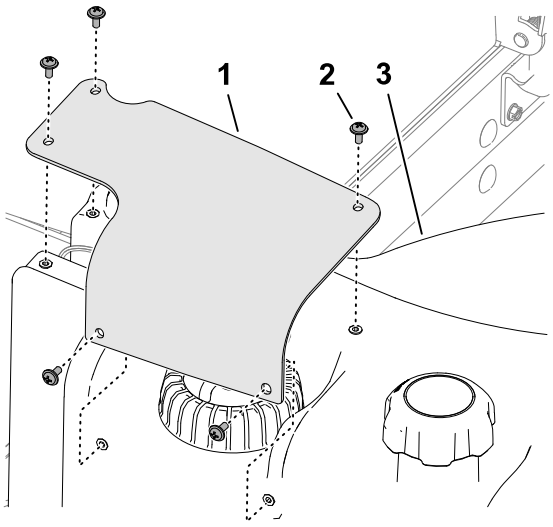

G415055

3. Remove the 2-socket connector of the fuel-sender harness (2) from the 2-pin connector of the machine wire harness (1).

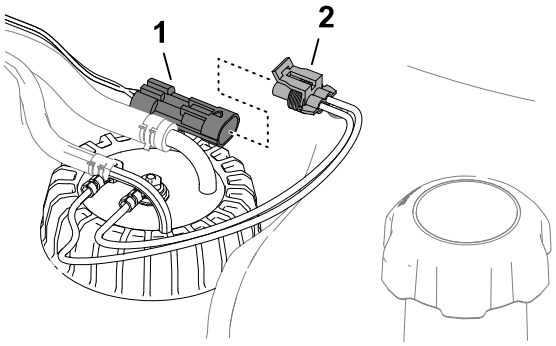

G415056

4. Move the clamps (2) that secure the hoses (1) to the fittings (3) of the fuel sender inboard, and remove the hoses from the fittings.

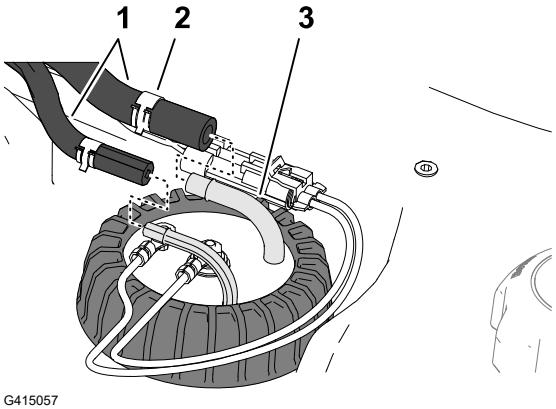

G415057

Cleaning the Fuel-Pickup Tube Screen (continued)

5. Loosen the fuel-sender cap ①.
6. Carefully lift the fuel sender from the tank.

   Note: Do not bend the pick-up tube, return tube, or float arm.

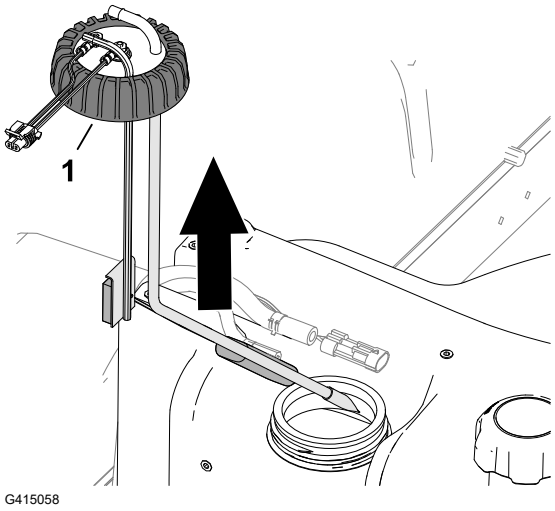

Cleaning the Installing the Fuel-Pickup Tube

1. Clean the screen at the end of the fuel pick-up tube.

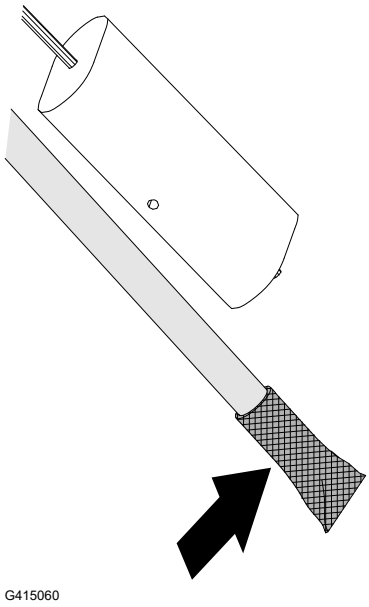

2. Carefully assemble the fuel pick-up tube and float into the fuel tank.
3. Align the fittings for the pick-up tube and return tube inboard.
4. Tighten the fuel-sender cap ① to the fuel tank.

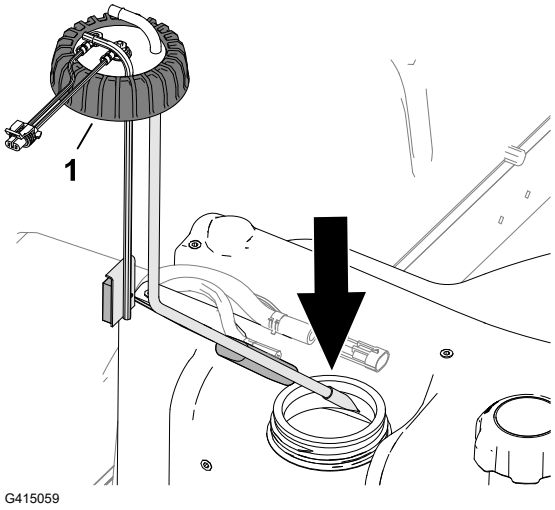

Cleaning the Fuel-Pickup Tube Screen (continued)

5. Assemble the hose [1] onto the fittings [3] of the fuel sender, and secure the hoses to the fittings with the clamps [2].

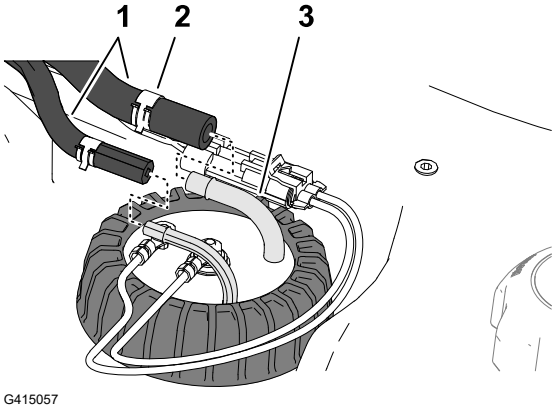

G415057

6. Plug the connector of the fuel-sender harness [2] into the connector of the machine wire harness [1].

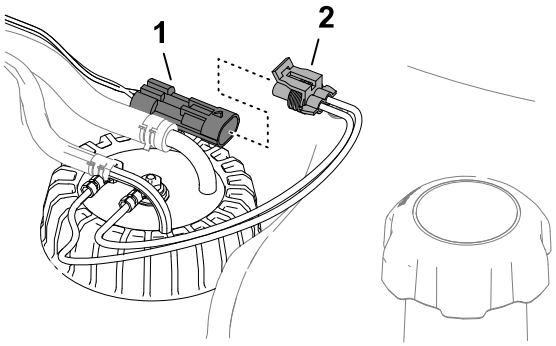

G415056

7. Install the fuel-sender cover [1] to the fuel tank [3] using the 5 screws [2].

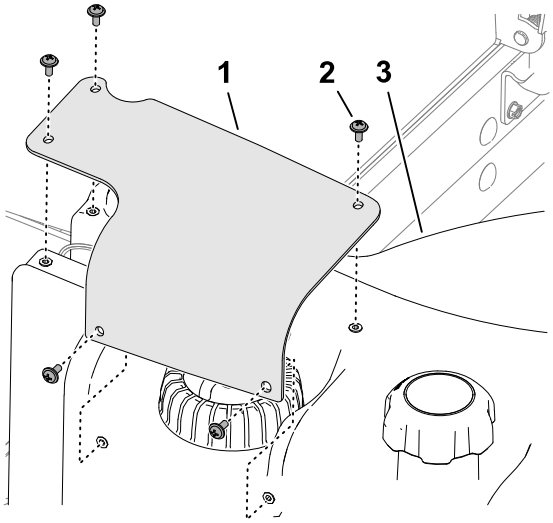

G415055

Priming the Fuel System

Prime the fuel system after the following scenarios:

- Replacing the fuel filter.
- Draining the water separator after each use or daily.
- Running out of fuel.
- Replacing a fuel hose or open the fuel system for any reason.

To prime the fuel system, perform the following steps:

Priming the Fuel System (continued)

IMPORTANT

Do not use the engine-starter motor to crank the engine for fuel-system priming.

1. Ensure that fuel is in the fuel tank.
2. Perform the following steps to prime the filter and the lines to the high-pressure pump to prevent wear or damage to the pump:
   A. Cycle the ignition key to the ON position for 15 to 20 seconds.
   B. Cycle the ignition key to the OFF position for 30 to 40 seconds.

      Note: This allows the ECU to power down.
   C. Cycle the key to the ON position for 15 to 20 seconds.
   D. Inspect for leaks around the filter and hoses.
   E. Start the engine and inspect for leaks.

Electrical System Maintenance

Inspecting the Electrical Cables

Inspect the electrical cables for damage, wear, loose fittings, weather deterioration, and chemical deterioration.

Note: Make all necessary repairs before operating.

Disconnecting the Battery

DANGER

Battery electrolyte contains sulfuric acid, which is fatal if consumed and causes severe burns.

- **Do not drink electrolyte and avoid contact with skin, eyes, or clothing.**
- **Wear safety glasses and rubber gloves.**
- **Fill the battery where clean water is always available for flushing the skin.**

1. Prepare the machine for maintenance.
2. Open the hood.

Disconnecting the Battery (continued)

3. Remove the cover ① from the battery tray ④ by pressing the sides of the battery cover.
4. Disconnect the negative battery cable ②.
5. Slide the insulator cover ③ off the positive battery-cable clamp, and disconnect the positive battery cable.

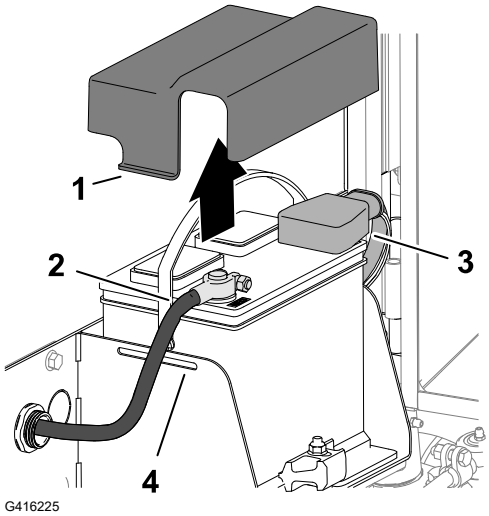

Connecting the Battery

1. Install the positive battery cable (red) ③ to the positive (+) battery post.
2. Install the negative battery cable (black) ② to the negative (-) battery post.
3. Apply a coat of Grafo 112X (skin-over) grease, Toro Part No. 505-47 to the battery posts and battery-cable clamps.
4. Slide the rubber boot over the positive battery-cable clamp.
5. Assemble the cover over the battery, inserting the tabs ① of the cover into the slots ④ in the battery tray.
6. Close and latch the hood.

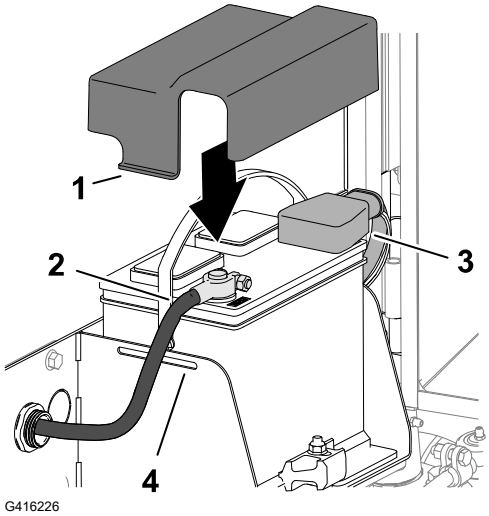

Charging the Battery

1. Disconnect the battery.
2. Connect a 3 to 4 A battery charger to the battery posts.
3. Charge the battery at a rate of 3 to 4 A for 4 to 8 hours.
4. When the battery is charged, disconnect the charger from the electrical outlet and battery posts.
5. Connect the battery.

Servicing the Battery

Note: Keep the terminals and the entire battery case clean because a dirty battery will discharge slowly.

1. Prepare the machine for maintenance.
2. Open the hood.
3. Check the condition of the battery.

   Note: Replace a worn or damaged battery.
4. Disconnect the battery cables, and remove the battery from the machine.
5. Clean the entire battery case with a solution of sodium bicarbonate (baking soda) and water.
6. Rinse the case with clean water.
7. Assemble the battery to the machine and connect the battery cables.
8. Close and latch the hood.

Replacing a 12 V Fuse-Block Fuse

The fuse block (1) is under the seat.

1. Prepare the machine for maintenance.
2. Unlatch and tilt the seat.
3. Replace the open fuse with the same fuse type and amperage rating.
4. Close and latch the seat.

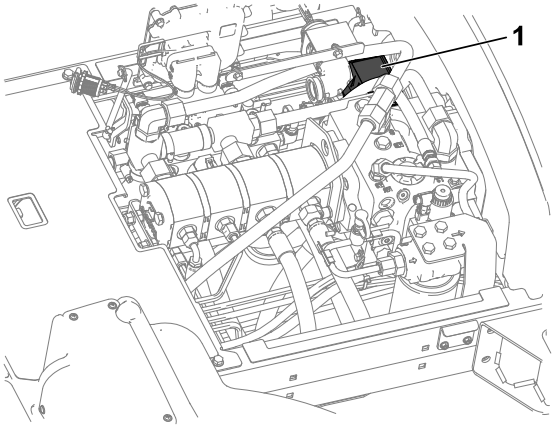

G437960

Replacing the TEC Fuse

1. Prepare the machine for maintenance.
2. Unlatch and open the hood.
3. At the front, left side of the engine, remove the cover of the in-line fuse holder (1).
4. Replace the open fuse with a fuse of the same type and amperage rating.
5. Assemble the cap to the in-line fuse holder.
6. Close and latch the hood.

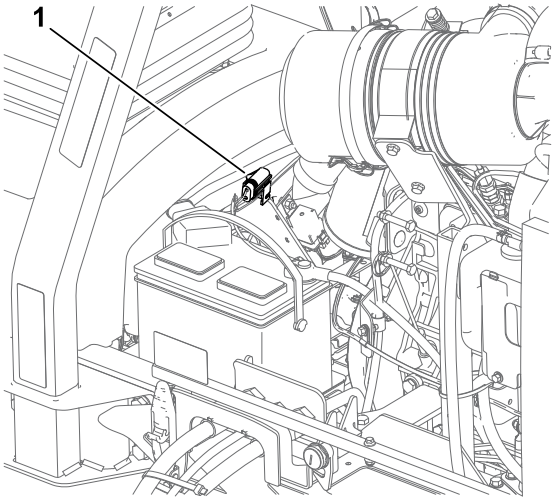

G439126

Drive System Maintenance

Checking the Tire Pressure

WARNING

Low tire pressure decreases machine side hill stability. This could cause a rollover, which could result in death or serious injury.

Do not under-inflate the tires.

Note: Maintain the recommended pressure in all tires to ensure a good quality of cut and proper machine performance.

1. Measure the air pressure in each tire. The correct air pressure in the tires is 83 to 103 kPa (12 to 15 psi).
2. If needed, add air to or remove air from the tires until you measure 83 to 103 kPa (12 to 15 psi).

Torquing the Wheel Lug Nuts

Torque the wheel lug nuts to **94 to 122 N·m (70 to 90 ft-lb)** in a crossing pattern.

WARNING

Failing to maintain proper torque of the wheel nuts could result in death or serious injury.

Maintain proper torque of the wheel nuts.

Torquing the Axle Hub Nuts

1. Torque the front-axle hub nuts to **407 to 542 N·m (300 to 400 ft-lb)**.
2. If the machine is equipped with CrossTrax® AWD, torque the rear-axle hub nuts to **366 to 447 N·m (270 to 330 ft-lb).**

Checking the Rear-Wheel Alignment

1. Rotate the steering wheel to position the rear wheels straight ahead.
2. Prepare the machine for maintenance.
3. At axle height, measure the center-to-center distance at the front and rear of the steering tires.

   Note: The rear wheel toe-in adjustment is correct if the difference between the front wheel measurement and the rear wheel measurement is 6 mm (1/4 inch) or less.

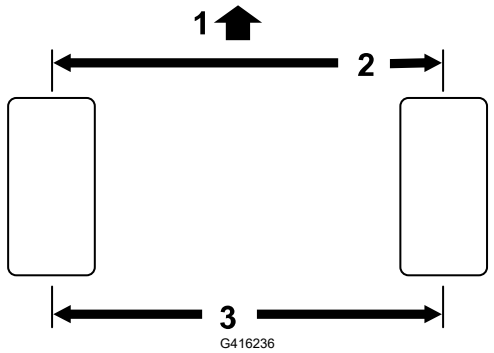

(1) Front of the traction unit
(2) 6 mm (1/4 inch) or less than the rear of the tire
(3) Center-to-center distance

4. If the measurement is greater than 6 mm (1/4 inch), adjust the rear wheel toe-in.

Adjusting the Rear Wheel Toe-in

1. Loosen the jam nut (1) on each end of the tie rod (2).

   Note: The end of the tie rod with the external groove is a left-hand thread.
2. Use the wrench flat (3) to rotate the tie rod.
3. At axle height, measure the center-to-center distance at the front and rear of the steering tires.

   Note: The rear wheel toe-in adjustment is correct if the difference between the front wheel measurement and the rear wheel measurement is 6 mm (1/4 inch) or less.
4. Repeat steps 1 and 2 as required.
5. Tighten the jam nuts.

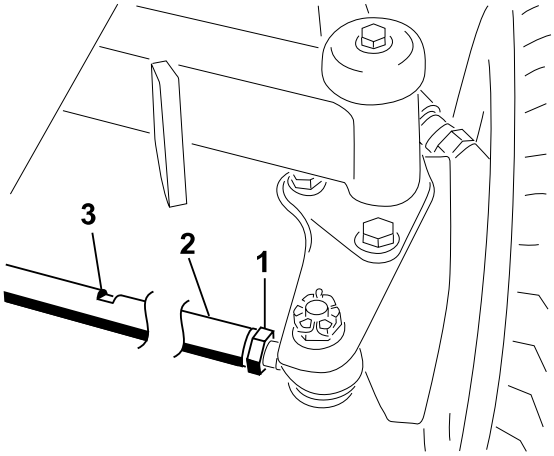

G416237

Cooling System Maintenance

Coolant Specifications

The coolant reservoir is filled at the factory with a 50/50 solution of water and ethylene glycol base extended-life coolant.

IMPORTANT

Use only commercially available coolants that meet the specifications listed in the Extended Life Coolant Standards Table.

Do not use conventional (green) inorganic-acid technology (IAT) coolant in your machine. Do not mix conventional coolant with extended-life coolant.

Coolant Specifications (continued)

Coolant Type Table

Ethylene-Glycol Coolant Type	Corrosion Inhibitor Type
Extended-life antifreeze	Organic-acid technology (OAT)

IMPORTANT

Do not rely on the color of the coolant to identify the difference between conventional (green) inorganic-acid technology (IAT) coolant and extended-life coolant.

Coolant manufacturers may dye extended-life coolant in one of the following colors: red, pink, orange, yellow, blue, teal, violet, and green. Use coolant that meets the specifications in the Extended Life Coolant Standards Table.

Extended Life Coolant Standards

ATSM International	SAE International
D3306 and D4985	J1034, J814, and 1941

IMPORTANT

Coolant concentration should be a 50/50 mixture of coolant to water.

- **Preferred:** When mixing coolant from a concentrate, mix it with distilled water.
- **Preferred option:** If distilled water is not available, use a pre-mix coolant instead of a concentrate.
- **Minimum requirement:** If distilled water and pre-mix coolant are not available, mix concentrated coolant with clean drinkable water.

Cooling system capacity

Approximately 6.6 L (7.0 US qt)

Checking the Coolant Level

CAUTION

If the engine has been running, the pressurized, hot coolant can escape, which could result in minor or moderate injury.

- **Do not open the radiator cap when the engine is running.**
- **Use a rag when opening the radiator cap, and open the cap slowly to allow steam to escape.**

---

1. Prepare the machine for maintenance.
2. Open the hood.
3. Check the level of coolant in the expansion tank.

   Note: The coolant level is correct if it is between the add 1 and full 2 marks on the side of the tank.
4. If the coolant level is low, remove the expansion-tank cap 3 and add the specified coolant until the level it is at the full mark.

   Note: Do not overfill the expansion tank with coolant.
5. Install the expansion-tank cap.
6. Close and latch the hood.

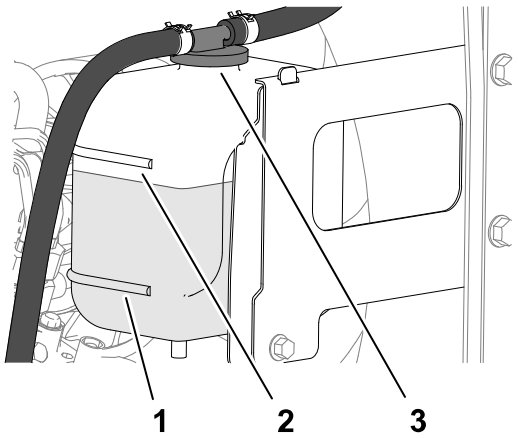

G439313

Inspecting the Cooling System Hoses

Inspect the cooling system hoses for leaks, kinked lines, loose mounting supports, wear, loose fittings, weather deterioration, and chemical deterioration.

Note: Make all necessary repairs before operating.

Cleaning the Engine Cooling System

1. Prepare the machine for maintenance
2. Unlatch and open the hood.
3. Thoroughly clean all debris out of the engine area.
4. Close and latch the hood.

Cleaning the Engine Cooling System (continued)

5. Unlatch ① the rear screen ② and pivot it open.
6. Thoroughly clean the screen with compressed air.

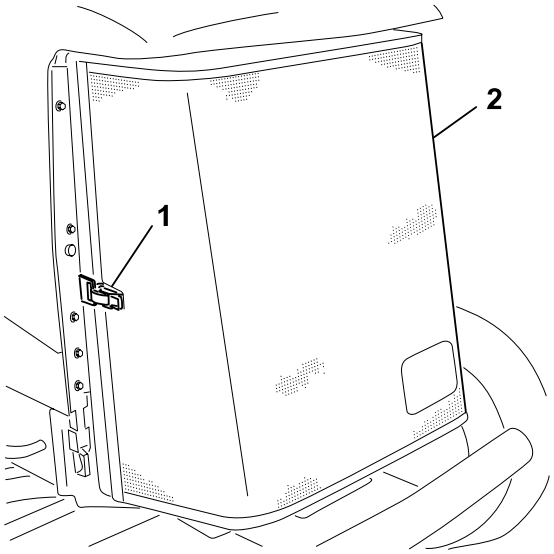

G416241

7. Rotate the 2 oil-cooler latches ② inward and tilt the oil cooler ①.

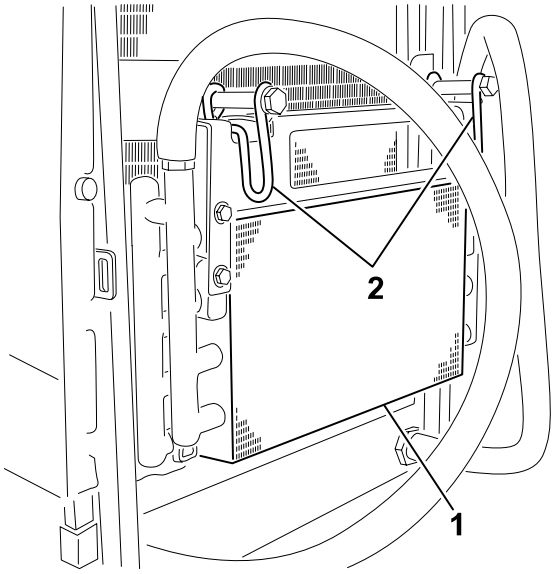

G416245

8. Thoroughly clean both sides of the oil cooler and the radiator ① with compressed air.
9. Raise the oil cooler and secure it with the 2 latches.
10. Close and latch the screen.

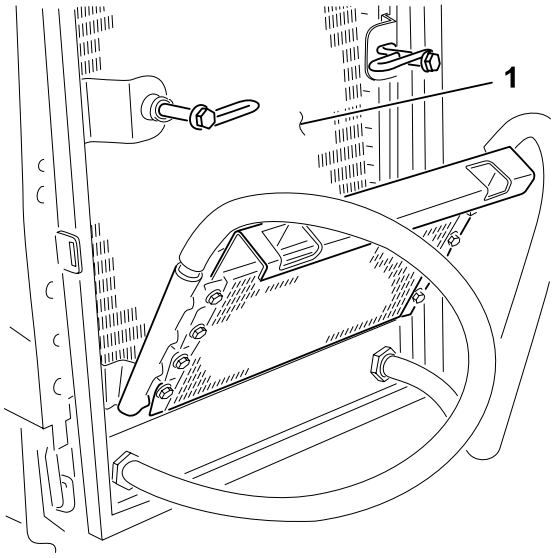

G416246

Belt Maintenance

Tensioning the Alternator Belt

1. Prepare the machine for maintenance.
2. Open the hood.
3. Check the condition of the alternator belt.

   Note: Replace a worn or damaged belt.
4. Check the tension of the alternator belt by pressing it midway between the pulleys.

   Note: With 45 N (10 lb) of force, the belt should deflect 10 mm (3/8 inch).
5. If the deflection is incorrect, complete the following procedure to tension the belt:
   A. Loosen the alternator (2) mounting bolts (1).
   B. Increase or decrease the alternator-belt tension, and tighten the mounting bolts.
   C. Check the deflection of the belt again to ensure that the tension is correct.
6. Close and latch the hood.

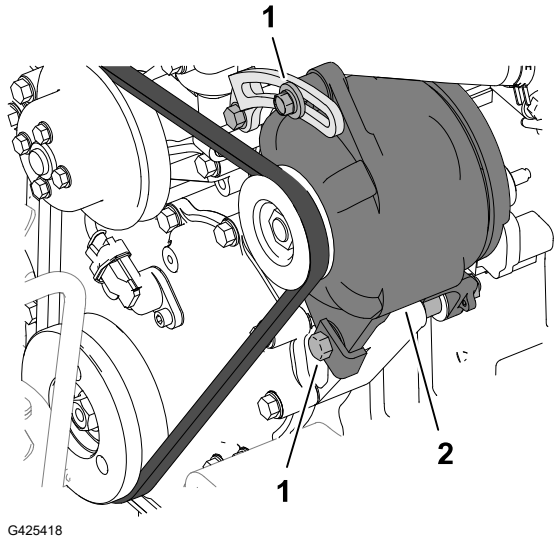

Hydraulic System Maintenance

Hydraulic Fluid Specifications

The reservoir is filled at the factory with high-quality hydraulic fluid. Check the level of the hydraulic fluid before you first start the engine and daily thereafter.

Recommended hydraulic fluid: Toro PX Extended Life Hydraulic Fluid; available in 19 L (5 US gallon) pails or 208 L (55 US gallon) drums.

Note: A machine using the recommended replacement fluid requires less frequent fluid and filter changes.

Alternative hydraulic fluids: If Toro PX Extended Life Hydraulic Fluid is not available, you may use another conventional, petroleum-based hydraulic fluid having specifications that fall within the listed range for all the following material properties and that it meets industry standards. Do not use synthetic fluid. Consult with your lubricant distributor to identify a satisfactory product.

Hydraulic Fluid Specifications (continued)

Note: Toro does not assume responsibility for damage caused by improper substitutions, so use products only from reputable manufacturers who will stand behind their recommendation.

High Viscosity Index/Low Pour Point Anti-wear Hydraulic Fluid, ISO VG 46

Material Properties:

Viscosity, ASTM D445	cSt @ 40°C (104°F) 44 to 48
Viscosity Index ASTM D2270	140 or higher
Pour Point, ASTM D97	-37°C to -45°C (-34°F to -49°F)
Industry Specifications:	Eaton Vickers 694 (I-286-S, M-2950-S/ 35VQ25 or M-2952-S)

Note: Many hydraulic fluids are almost colorless, making it difficult to spot leaks. A red dye additive for the hydraulic fluid is available in 20 ml (0.67 fl oz) bottles. A bottle is sufficient for 15 to 22 L (4 to 6 US gallons) of hydraulic fluid. Order Part No. 44-2500 from your authorized Toro distributor.

IMPORTANT

Toro Premium Synthetic Biodegradable Hydraulic Fluid is the only synthetic biodegradable fluid approved by Toro. This fluid is compatible with the elastomers used in Toro hydraulic systems and is suitable for a wide-range of temperature conditions. This fluid is compatible with conventional mineral oils, but for maximum biodegradability and performance, the hydraulic system should be thoroughly flushed of conventional fluid. The oil is available in 19 L (5 US gallon) pails or 208 L (55 US gallon) drums from your authorized Toro distributor.

Hydraulic tank capacity

56.7 L (15 US gallons)

Checking the Hydraulic-Fluid Level

The reservoir is filled at the factory with high-quality hydraulic fluid. The best time to check the hydraulic oil is when the fluid is cold. The machine should be in its transport configuration.

1. Prepare the machine for maintenance.
2. Clean the area around the filler neck and the cap of the hydraulic tank
3. Remove the dipstick from the filler neck and wipe it with a clean rag.
4. Insert the dipstick into the filler neck; then remove it and check the level of fluid.

   Note: The fluid level should be within operating range on the dipstick.

Checking the Hydraulic-Fluid Level (continued)

IMPORTANT

Do not overfill the tank.

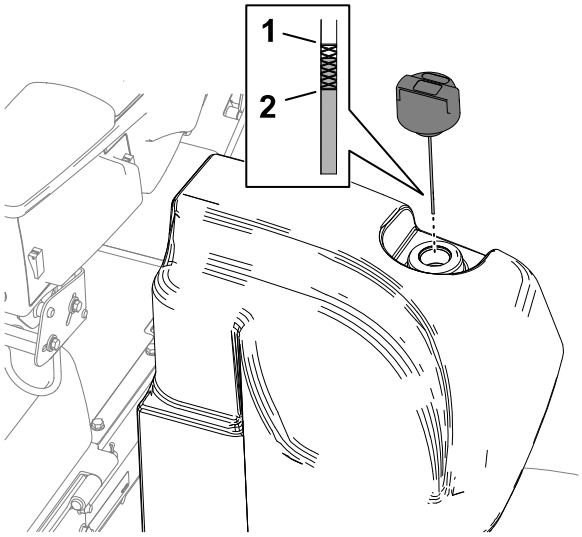

(1) Full mark (dipstick)

(2) Add mark (dipstick)

5. If the level is low, add the appropriate amount of the specified fluid to raise the level to the full mark.
6. Install the dipstick onto the filler neck.

Inspecting the Hydraulic Lines and Hoses

Inspect the hydraulic lines and hoses for leaks, kinked lines, loose mounting supports, wear, loose fittings, weather deterioration, and chemical deterioration.

Note: Make all necessary repairs before operating.

Replacing the Hydraulic Filters

IMPORTANT

Use of any other filters may void the warranty on some components.

Changing the Return Filter

The hydraulic system is equipped with a return filter-service indicator ①. You view the filter-service indicator through the hole in the floor plate. With the engine running at operating temperature, check the color of the indicator as follows:

- Green indicates normal hydraulic-fluid flow through the filter.
- Ref indicates a restricted filter. Change the return filter.

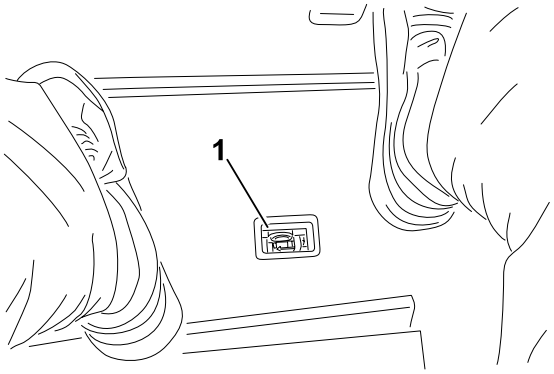

G417021

1. Prepare the machine for maintenance.
2. At the front of the machine, align a drain pan under the return filter ①.
3. Remove the filter.
4. Wipe clean the filter mounting area of the filter head ②.
5. Apply a thin coat of the specified hydraulic fluid to the gasket of the new return filter.
6. Thread the filter onto the filter head by hand until the gasket contacts the mounting surface, then rotate the filter an additional 1/2 turn.

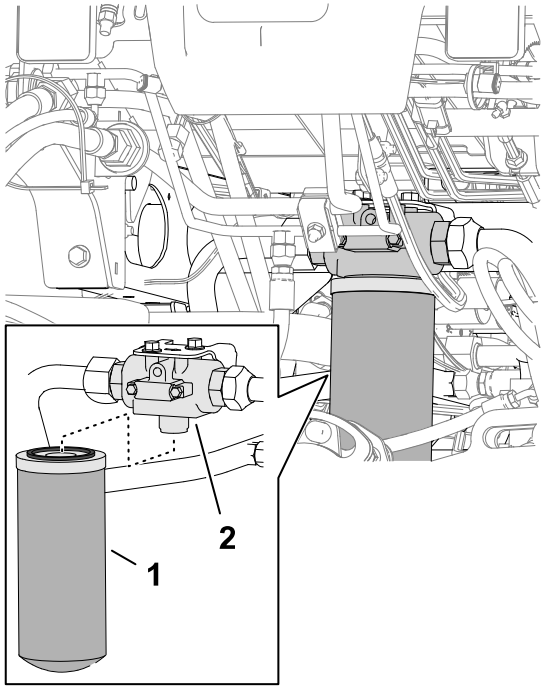

G417022

Changing the Charge Filter

1. Prepare the machine for maintenance.
2. Tilt the seat.

Replacing the Hydraulic Filters (continued)

3. At the left side of the machine, align a drain pan under the charge filter ②.
4. Remove the filter.
5. Wipe clean the filter mounting area of the filter head ①.
6. Apply a thin coat of the specified hydraulic fluid to the gasket of the new charge filter.
7. Thread the filter onto the filter head by hand until the gasket contacts the mounting surface, then rotate the filter an additional 1/2 turn.
8. Lower and latch the seat.

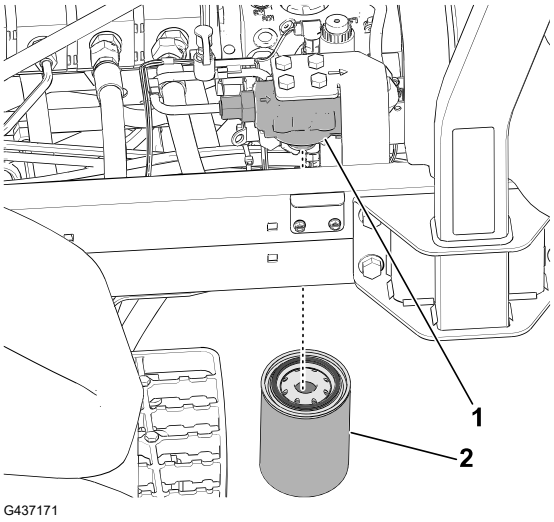

Checking for Leaks

1. Start the engine and run it for 2 minutes to purge air from the hydraulic system.
2. Shut off the engine, remove the key, and check for leaks at the return and charge filters.

   Note: Repair all hydraulic leaks.

Changing the Hydraulic Fluid

If the fluid becomes contaminated, contact your Toro Distributor because the system must be flushed. Contaminated fluid looks milky or black when compared to clean fluid.

1. Prepare the machine for maintenance.
2. Place a large drain pan under the manifold on the bottom the hydraulic tank.

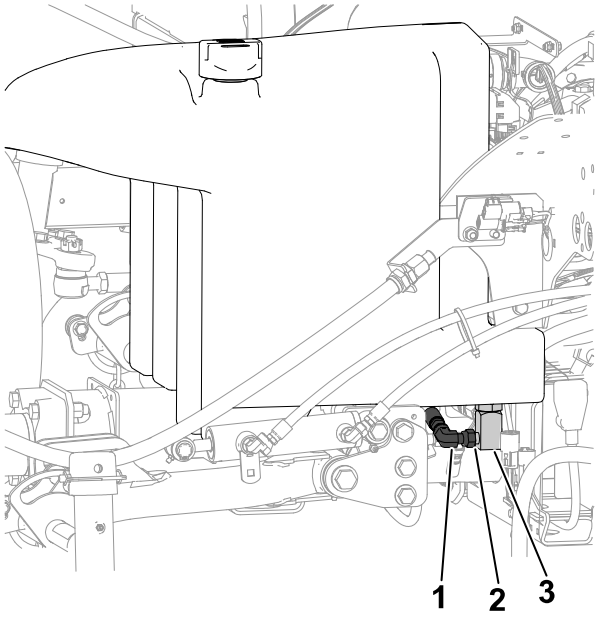

(1) Manifold
(2) Loosen fitting here
(3) 90° fitting

3. Disconnect the 90° fitting from the manifold and allow the tank to drain.
4. When hydraulic fluid stops draining from the tank, connect the 90° fitting to the manifold.
5. Fill the tank with the specified hydraulic fluid.

IMPORTANT

Use only the hydraulic fluids specified. Other fluids could cause system damage.

6. Install the tank cap.
7. Start the engine, and use all the hydraulic controls to distribute hydraulic fluid throughout the system.
8. Check for hydraulic-fluid leaks.
9. Check the level.

Cutting Unit Maintenance

Checking the Reel-to-Bedknife Contact

Check the reel-to-bedknife contact even if the quality of cut had been acceptable previously.

Note: There must be light contact across the full length of the reel and bedknife.

Backlapping the Cutting Units

WARNING

Contact with the cutting units or other moving parts could result in death or serious injury.

- **Keep your fingers, hands, and clothing away from the cutting units and other moving parts.**
- **Never attempt to turn the cutting units by hand or foot while the engine is running.**

Note: Additional instructions and procedures on backlapping are available in the Toro Reel Mower Basics (with sharpening guidelines), Form 09168SL.

Preparing the Machine

1. Prepare the machine for maintenance.
2. Disengage the PTO.
3. Make initial reel-to-bedknife adjustments appropriate for backlapping on all cutting units which are to be backlapped; refer to the cutting unit *Operator's Manual*.
4. Unlock and raise the seat to expose the mower manifold.

Backlapping the Cutting Units (continued)

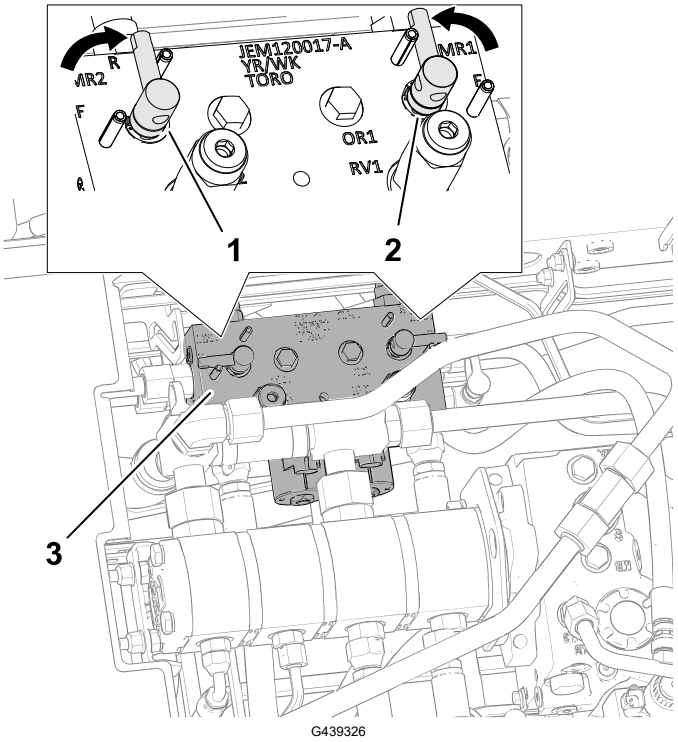

G439326

1. Backlap lever (backlap position—front cutting units)
2. Backlap lever (backlap position—rear cutting units)
3. Mower manifold

5. Move the backlap levers to the R (backlap) position.

   Note: Select either the front, rear, or both backlap levers to control which cutting units to backlap. When backlapping, the front cutting units all operate together, and the rear cutting units operate together.

Lapping the Reels and Bedknife

WARNING

Changing the engine speed while backlapping may cause the cutting units to stall, which could result in death or serious injury.

- **Never change the engine speed while backlapping.**
- **Backlap only at idle engine speed.**

---

1. Start the engine and run at low idle speed.
2. With the Mow/Transport lever in the Mow position, disengage the PTO. Move the Lower Mow/Lift control forward to start the backlapping operation on the designated reels.
3. Apply lapping compound with a long-handled brush.

Backlapping the Cutting Units (continued)

DANGER

Contacting the cutting units when they are moving will result in death or serious injury.

To avoid personal injury, ensure that you are clear of the cutting units before proceeding.

IMPORTANT

Never use a short-handled brush.

4. If the reels stall or become erratic while backlapping, select a higher reel-speed setting until the speed stabilizes, then return the reel speed to your desired speed.
5. If you need to make an adjustment to the cutting units while backlapping, perform the following steps:
   A. Move the Lower Mow/Raise lever rearward and disengage the PTO.
   B. Shut off the engine and remove the key.
   C. Adjust to the cutting units.
   D. Repeat steps 1 through 3.
6. Repeat step 3 for the other cutting units that you want to backlap.

Finishing Backlapping

1. Move the Lower Mow/Raise lever rearward and disengage the PTO.
2. Shut off the engine and remove the key.
3. Move the backlap levers to the F (mow) position.

IMPORTANT

If you do not change backlap lever to the F (mow) position after backlapping, the cutting units will not function properly.

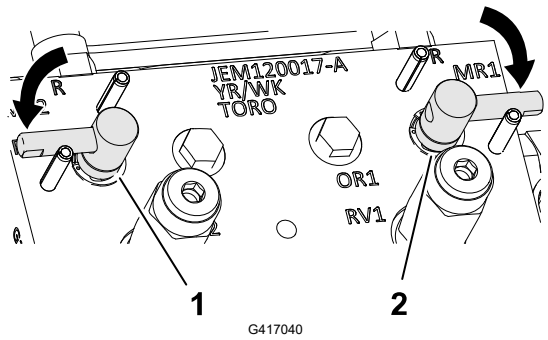

(1) Backlap lever (mow position—front cutting units)

(2) Backlap lever (mow position—rear cutting units)

Backlapping the Cutting Units (continued)

4. Lower and latch the operator's seat.
5. Wash all lapping compound off from the cutting units.
6. For a better cutting edge, run a file across the front face of the bedknife after lapping.

   Note: This removes any burrs or rough edges that may have built up on the cutting edge.

Chassis Maintenance

Inspecting the Seat Belt

1. Inspect the seat belt for wear, cuts, and other damage. Replace the seat belt(s) if any component does not operate properly.
2. Clean the seat belt as necessary.

Cleaning

Washing the Machine

Wash the machine as needed using water alone or with a mild detergent. You may use a rag when washing the machine.

IMPORTANT

- **Do not use brackish or reclaimed water to clean the machine.**
- **Do not use power-washing equipment to wash the machine. Power-washing equipment may damage the electrical system, loosen important decals, or wash away necessary grease at friction points. Avoid excessive use of water near the control panel, engine, and battery.**
- **Do not wash the machine with the engine running. Washing the machine with the engine running may result in internal engine damage.**

Storing the Machine

1. Park the machine on a level surface, lower the cutting units, engage the parking brake, shut off the engine, and remove the key.
2. Thoroughly clean the traction unit, cutting units, and the engine.
3. Check the tire pressure.
4. Check all fasteners for looseness; tighten them as necessary.
5. Grease or oil all grease fittings and pivot points. Wipe up any excess lubricant.
6. Lightly sand and use touch-up paint on painted areas that are scratched, chipped, or rusted. Repair any dents in the metal body.
7. Service the battery and cables as follows:
   A. Remove the battery terminals from the battery posts.
   B. Clean the battery, terminals, and posts with a wire brush and baking-soda solution.
   C. Coat the cable terminals and battery posts with Grafo 112X skin-over grease (Toro Part No. 505-47) or petroleum jelly to prevent corrosion.
   D. Slowly charge the battery every 60 days for 24 hours to prevent lead sulfation of the battery.
8. Prepare the engine as follows:
   A. Drain the engine oil from the oil pan and install the drain plug.
   B. Remove and discard the oil filter. Install a new oil filter.
   C. Fill the engine with specified motor oil.
   D. Start the engine and run it at idle speed for approximately 2 minutes.
   E. Shut off the engine and remove the key.
   F. Flush the fuel tank with fresh, clean fuel.
   G. Secure all the fuel-system fittings.
   H. Thoroughly clean and service the air-cleaner assembly.
   I. Seal the air-cleaner inlet and the exhaust outlet with weatherproof tape.
   J. Check the antifreeze protection and add a 50/50 solution of water and ethylene glycol antifreeze as needed for the expected minimum temperature in your area.

Storing the Battery

If you are storing the machine for more than 30 days, remove the battery and charge it fully. Either store it on the shelf or on the machine. Leave the cables disconnected if they are stored on the machine. Store the battery in a cool atmosphere to avoid quick deterioration of

the charge in the battery. To prevent the battery from freezing, ensure that it is fully charged. The specific gravity of a fully charged battery is 1.265 to 1.299.

The Toro Warranty

Two-Year or 1,500 Hours Limited Warranty

Conditions and Products Covered

The Toro Company warrants your Toro Commercial product (“Product”) to be free from defects in materials or workmanship for 2 years or 1,500 operational hours*, whichever occurs first. This warranty is applicable to all products with the exception of Aerators (refer to separate warranty statements for these products). Where a warrantable condition exists, we will repair the Product at no cost to you including diagnostics, labor, parts, and transportation. This warranty begins on the date the Product is delivered to the original retail purchaser. *Product equipped with an hour meter.

Instructions for Obtaining Warranty Service

You are responsible for notifying the Commercial Products Distributor or Authorized Commercial Products Dealer from whom you purchased the Product as soon as you believe a warrantable condition exists. If you need help locating a Commercial Products Distributor or Authorized Dealer, or if you have questions regarding your warranty rights or responsibilities, you may contact us at:

Toro Commercial Products Service Department
8111 Lyndale Avenue South
Bloomington, MN 55420-1196
952-888-8801 or 800-952-2740
E-mail: commercial.warranty@toro.com

Owner Responsibilities

As the product owner, you are responsible for required maintenance and adjustments stated in your *Operator's Manual*. Repairs for product issues caused by failure to perform required maintenance and adjustments are not covered under this warranty.

Items and Conditions Not Covered

Not all product failures or malfunctions that occur during the warranty period are defects in materials or workmanship. This warranty does not cover the following:

- Product failures which result from the use of non-Toro replacement parts, or from installation and use of add-on, or modified non-Toro branded accessories and products.
- Product failures which result from failure to perform recommended maintenance and/or adjustments.
- Product failures which result from operating the Product in an abusive, negligent, or reckless manner.
- Parts consumed through use that are not defective. Examples of parts which are consumed, or used up, during normal Product operation include, but are not limited to, brake pads and linings, clutch linings, blades, reels, rollers and bearings (sealed or greasable), bed knives, spark plugs, castor wheels and bearings, tires, filters, belts, and certain sprayer components such as diaphragms, nozzles, flow meters, and check valves.
- Failures caused by outside influence, including, but not limited to, weather, storage practices, contamination, use of unapproved fuels, coolants, lubricants, additives, fertilizers, water, or chemicals.
- Failure or performance issues due to the use of fuels (e.g. gasoline, diesel, or biodiesel) that do not conform to their respective industry standards.
- Normal noise, vibration, wear and tear, and deterioration. Normal “wear and tear” includes, but is not limited to, damage to seats due to wear or abrasion, worn painted surfaces, scratched decals or windows.

Parts

Parts scheduled for replacement as required maintenance are warranted for the period of time up to the scheduled replacement time for that part. Parts replaced under this warranty are covered for the duration of the original product warranty and become the property of Toro. Toro will make the final decision whether to repair any existing part or assembly or replace it. Toro may use remanufactured parts for warranty repairs.

Deep Cycle and Lithium-Ion Battery Warranty

Deep cycle and Lithium-Ion batteries have a specified total number of kilowatt-hours they can deliver during their lifetime. Operating, recharging, and maintenance techniques can extend or reduce total battery life. As the batteries in this product are consumed, the amount of useful work between charging intervals will slowly decrease until the battery is completely worn out. Replacement of worn out batteries, due to normal consumption, is the responsibility of the product owner.

Note: (Lithium-Ion battery only) Refer to the battery warranty for additional information.

Lifetime Crankshaft Warranty (ProStripe 02657 Model Only)

The Prostripe which is fitted with a genuine Toro Friction Disc and Crank-Safe Blade Brake Clutch (integrated Blade Brake Clutch (BBC) + Friction Disc assembly) as original equipment and used by the original purchaser in accordance with recommended operating and maintenance procedures, are covered by a Lifetime Warranty against engine crankshaft bending. Machines fitted with friction washers, Blade Brake Clutch (BBC) units and other such devices are not covered by the Lifetime Crankshaft Warranty.

Maintenance is at the Owner’s Expense

Engine tune-up, lubrication, cleaning and polishing, replacement of filters, coolant, and completing recommended maintenance are some of the normal services Toro products require that are at the owner’s expense.

General Conditions

Repair by an Authorized Toro Distributor or Dealer is your sole remedy under this warranty.

The Toro Company is not liable for indirect, incidental or consequential damages in connection with the use of the Toro Products covered by this warranty, including any cost or expense of providing substitute equipment or service during reasonable periods of malfunction or non-use pending completion of repairs under this warranty. Except for the Emissions warranty referenced below, if applicable, there is no other express warranty. All implied warranties of merchantability and fitness for use are limited to the duration of this express warranty.

Some states do not allow exclusions of incidental or consequential damages, or limitations on how long an implied warranty lasts, so the above exclusions and limitations may not apply to you. This warranty gives you specific legal rights, and you may also have other rights which vary from state to state.

Note Regarding Emissions Warranty

The Emissions Control System on your Product may be covered by a separate warranty meeting requirements established by the U.S. Environmental Protection Agency (EPA) and/or the California Air Resources Board (CARB). The hour limitations set forth above do not apply to the Emissions Control System Warranty. Refer to the Engine Emission Control Warranty Statement supplied with your product or contained in the engine manufacturer’s documentation.

Countries Other than the United States, Mexico, or Canada

Customers who have purchased Toro products exported from the United States, Mexico, or Canada should contact their Toro Distributor (Dealer) to obtain guarantee policies for your country, province, or state. If for any reason you are dissatisfied with your Distributor's service or have difficulty obtaining guarantee information, contact your Authorized Toro Service Center.

California Proposition 65 Warning Information

What is this warning?

You may see a product for sale that has a warning label like the following:



WARNING: Cancer and Reproductive Harm—www.p65Warnings.ca.gov.

What is Prop 65?

Prop 65 applies to any company operating in California, selling products in California, or manufacturing products that may be sold in or brought into California. It mandates that the Governor of California maintain and publish a list of chemicals known to cause cancer, birth defects, and/or other reproductive harm. The list, which is updated annually, includes hundreds of chemicals found in many everyday items. The purpose of Prop 65 is to inform the public about exposure to these chemicals.

Prop 65 does not ban the sale of products containing these chemicals but instead requires warnings on any product, product packaging, or literature with the product. Moreover, a Prop 65 warning does not mean that a product is in violation of any product safety standards or requirements. In fact, the California government has clarified that a Prop 65 warning "is not the same as a regulatory decision that a product is 'safe' or 'unsafe.'" Many of these chemicals have been used in everyday products for years without documented harm. For more information, go to https://oag.ca.gov/prop65/faqs-view-all.

A Prop 65 warning means that a company has either (1) evaluated the exposure and has concluded that it exceeds the "no significant risk level"; or (2) has chosen to provide a warning based on its understanding about the presence of a listed chemical without attempting to evaluate the exposure.

Does this law apply everywhere?

Prop 65 warnings are required under California law only. These warnings are seen throughout California in a wide range of settings, including but not limited to restaurants, grocery stores, hotels, schools, and hospitals, and on a wide variety of products. Additionally, some online and mail order retailers provide Prop 65 warnings on their websites or in catalogs.

How do the California warnings compare to federal limits?

Prop 65 standards are often more stringent than federal and international standards. There are various substances that require a Prop 65 warning at levels that are far lower than federal action limits. For example, the Prop 65 standard for warnings for lead is 0.5 µg/day, which is well below the federal and international standards.

Why don't all similar products carry the warning?

- Products sold in California require Prop 65 labelling while similar products sold elsewhere do not.
- A company involved in a Prop 65 lawsuit reaching a settlement may be required to use Prop 65 warnings for its products, but other companies making similar products may have no such requirement.
- The enforcement of Prop 65 is inconsistent.
- Companies may elect not to provide warnings because they conclude that they are not required to do so under Prop 65; a lack of warnings for a product does not mean that the product is free of listed chemicals at similar levels.

Why does Toro include this warning?

Toro has chosen to provide consumers with as much information as possible so that they can make informed decisions about the products they buy and use. Toro provides warnings in certain cases based on its knowledge of the presence of one or more listed chemicals without evaluating the level of exposure, as not all the listed chemicals provide exposure limit requirements. While the exposure from Toro products may be negligible or well within the "no significant risk" range, out of an abundance of caution, Toro has elected to provide the Prop 65 warnings. Moreover, if Toro does not provide these warnings, it could be sued by the State of California or by private parties seeking to enforce Prop 65 and subject to substantial penalties.