FORM NO. 3317–153 REV A

TORO®

MODEL NO. 20442–5900001 & UP
MODEL NO. 20444–5900001 & UP

Parts Catalog

21" Recycler®
Mower

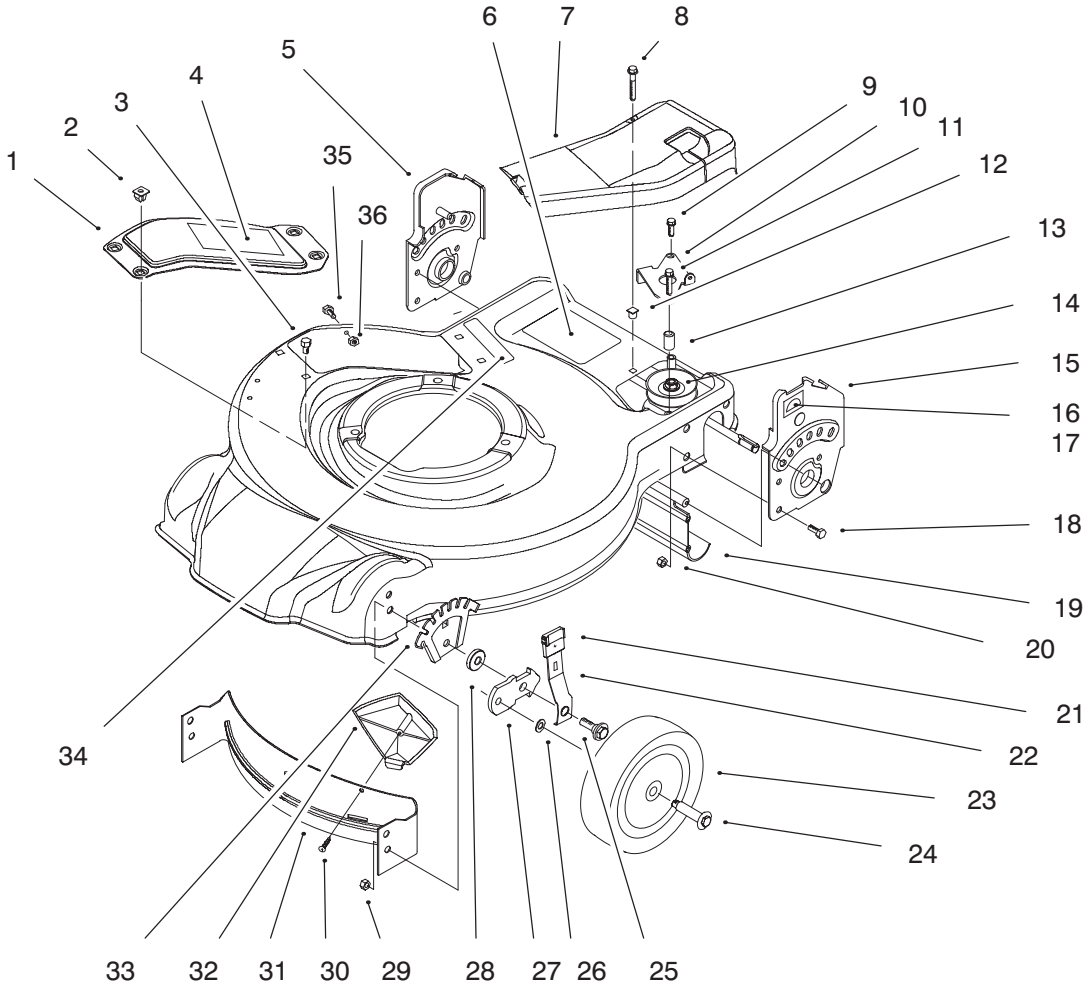

C–2245A

Housing Assembly

Ref. No.	Part No.	Description	No. Used
1	16–9269	Cover–Recycling (Incl. Ref. #4)	1
2	93–0242	Grommet	4
3	32144–4	Screw–Tap.	3
4	85–7060	Decal–Danger	1
5	93–0234	Bracket–Handle RH	1
6	93–0248	Decal–Warning	1
7	93–0209	Cover–Belt	1
8	32144–119	Screw–Thread Form	1
9	49–2040	Screw–Hex Hd.	1
10	93–0228	Brkt.–Belt Guide	1
11	92–1616	Screw	1
12	605120	Grommet	1
13	614673	Spacer	1
14	93–0240	Transmission Assembly	1
15	93–0233	Bracket–Handle LH	1

Ref. No.	Part No.	Description	No. Used
16	92–2915	Decal–HOC L.H.	1
17	92–2914	Decal–HOC R.H.	1
18	322–3	Screw–Hex Hd. Cap	6
19	92–8647	Shield–Trailing	1
20	3296–29	Nut–Lock	6
21	92–1008	Knob–Height Adjust	4
22	614687	Spring Arm–Front	2
23	92–9591	Wheel Assembly	2
24	614650	Bolt–Shoulder	2
25	614672	Bolt–Shoulder	2
26	40–1940	Washer	2
27	614637	Bracket–Wheel Height Adj.	2
28	92–4890	Washer	2
29	3296–39	Nut–Lock	2
30	93–0231	Screw–Plastite	1
31	93–0222	Baffle–Front	1

© The TORO Company –1994 REV, 2003
All Rights Reserved

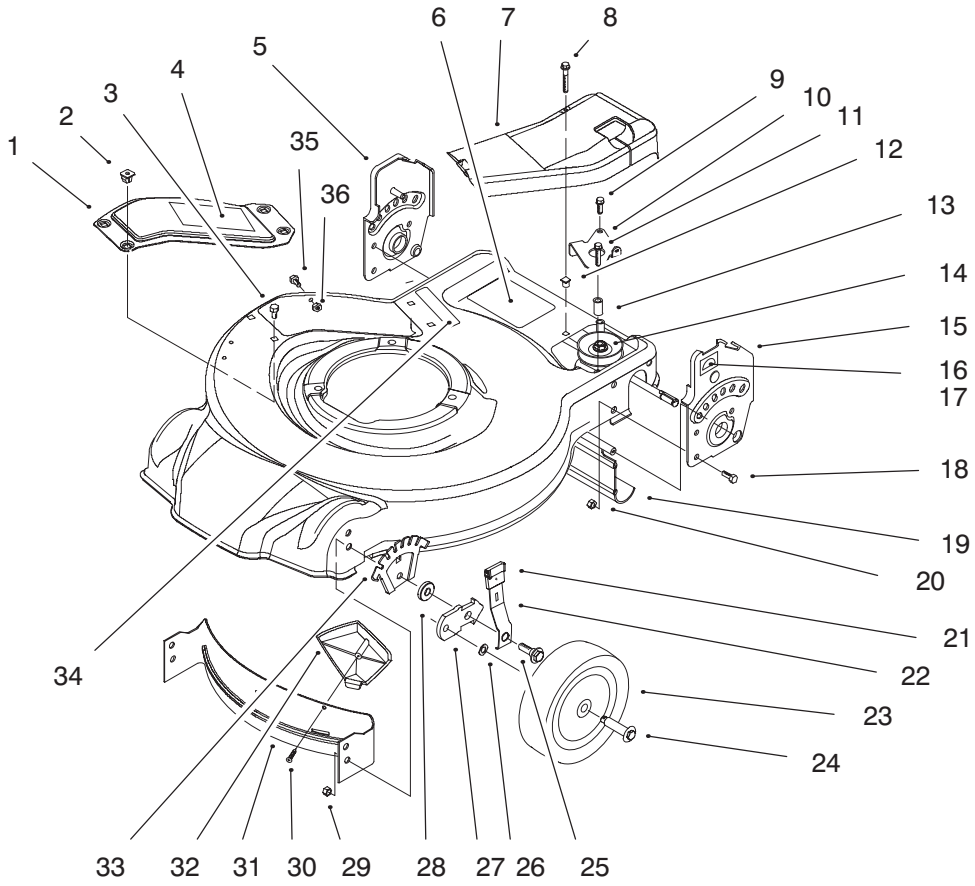

C−2245A

Housing Assembly (Continued)

Ref. No.	Part No.	Description	No. Used
32	93−0216	Kicker−Front	1
33	92−4881	Plate−Height Adjust	2
34	93−0262	Decal−Warning	1
35	32105−27	Screw−Hex Washer Hd.	1
36	3296−2	Nut−Lock	1

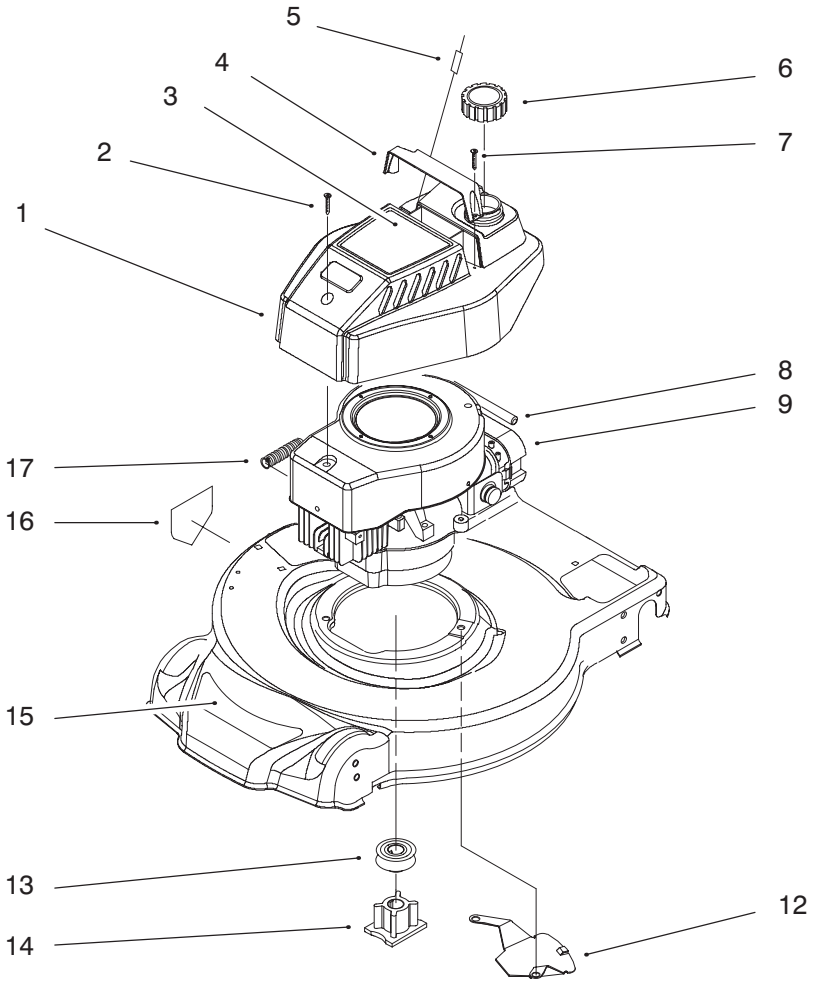

C−2246

Engine Assembly #1

Ref. No.	Part No.	Description	No. Used
1	92−6396	Shroud−Engine (Model No. 20442 Only)	1
2	93−4302	Screw−Sems (Model No. 20442 Only)	3
3	93−0246	Decal−Engine (Model No. 20442 Only)	1
4	93−1200	Cover−Strap (Model No. 20442 Only)	1
5	92−1701	Rope−Stop (Model No. 20442 Only)	1
6	55−3578	Gas Cap Assembly (Model No. 20442 Only)	1
7	32104−118	Screw−PH (Model No. 20442 Only)	2
8	68−3632	Line−Fuel (Model No. 20442 Only)	1
9		Engine Assembly (Model No. 20442 Only)	1
12	93−4196	Shield−Grass	1
13	93−0278	Pulley−Driver (Model No. 20442 Only)	1
14	52−7320	Retainer−Blade (Model No. 20442 Only)	1
15	93−0245	Decal−Deck	1
16	39−5770	Decal−Danger	1
17	66−5370	Spring−Compression (Model No. 20442)	1

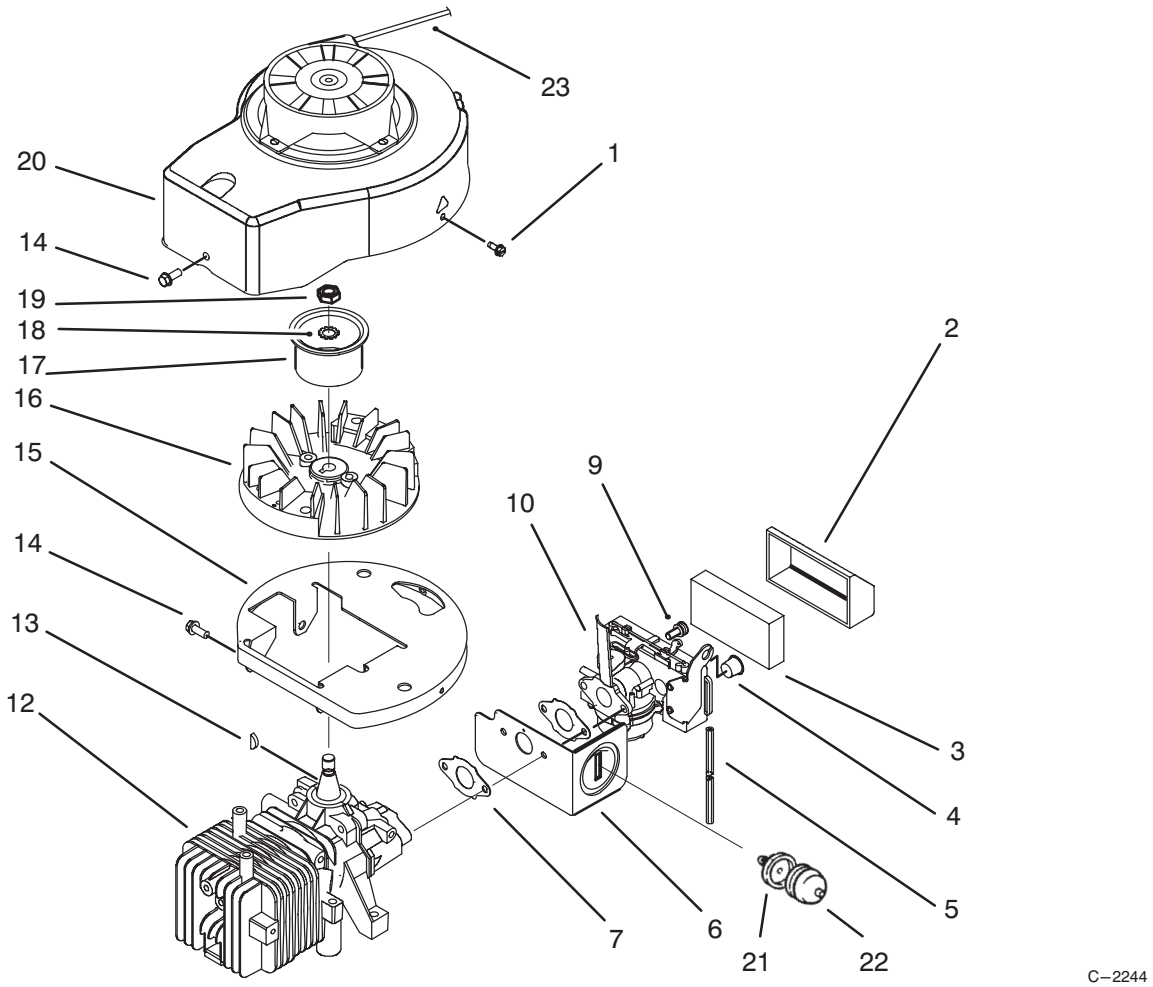

Shroud and Block Assembly (Model No. 20442 Only)

Ref. No.	Part No.	Description	No. Used
1	614699	Screw	3
2	93−1231	Cover−Air Filter	1
3	609493	Element−Air Filter	1
4	93−4320	Plug	1
5	44−3175	Hose−Primer	1
6	93−1227	Shield−Carburetor	1
7	92−4948	Gasket−Carburetor	2
9	609482	Screw	2
10	92−9695	Carburetor Assembly	1
12	92−9693	Short Block Assembly	1
13	607199	Key	1

Ref. No.	Part No.	Description	No. Used
14	614702	Screw	4
15	93−1216	Base−Shroud	1
16	684743	Flywheel Assembly	1
17	614640	Hub−Starter	1
18	316959	Washer−Lock	1
19	130743	Nut	1
20	93−1248	Shroud	1
21	44−2750	Body−Primer	1
22	66−7460	Bulb−Primer	1
23	93−4304	Rope	1

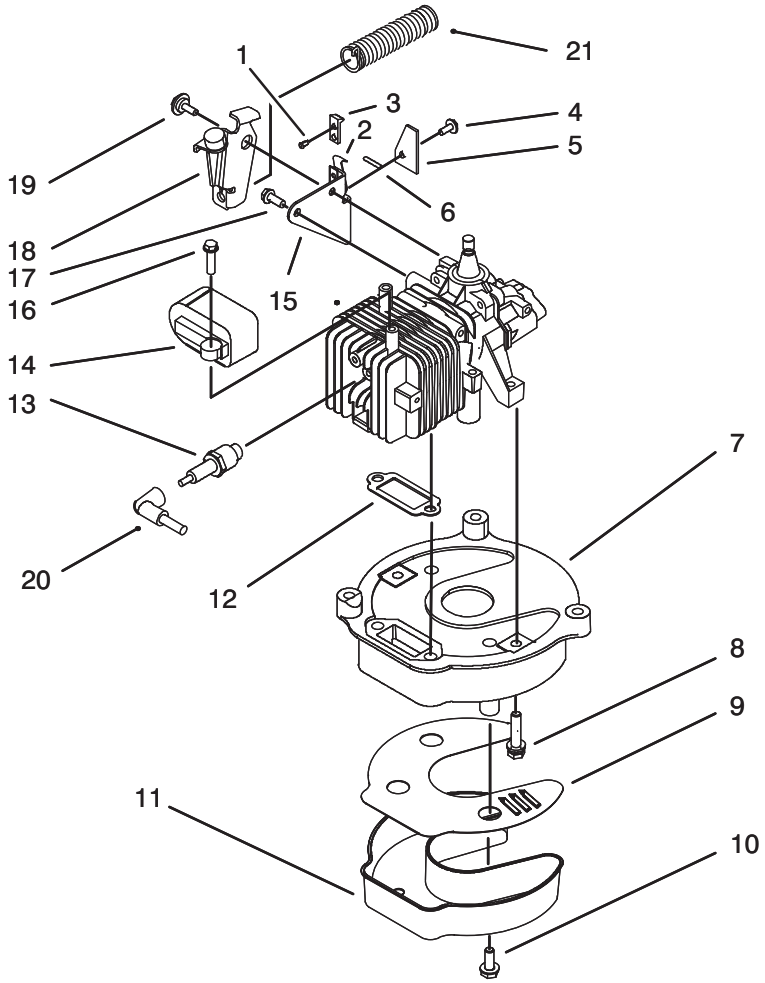

C−1899

Brake and Muffler Assembly (Model No. 20442 Only)

Ref. No.	Part No.	Description	No. Used
1	3290−459	Rivet	2
2	60−9010	Strap−Ground	1
3	92−2925	Strap−Insulation	1
4	12−5450	Screw−Thread Forming	1
5	53−4690	Stop−Ground Strap	1
6	92−1156	Wire−Brake Switch Lead	1
7	614654	Plate−Muffler	1
8	607601	Screw	4
9	93−1217	Baffle	1
10	609471	Screw	3
11	93−1108	Cover−Muffler	1

Ref. No.	Part No.	Description	No. Used
12	93−1233	Gasket−Exhaust	1
13	614009	Plug−Spark	1
14	684049	Ignition Assembly (Incl. Ref. #20)	1
15	84−7820	Plate−Brake Mount	1
16	613208	Screw−Hex Washer Hd.	2
17	614702	Screw	1
18	66−5380	Plate−Brake Assembly	1
19	92−9698	Screw−Shoulder	1
20	681678	Lead & Cover Assembly	1
21	66−5370	Spring−Compression	1

3317−153A

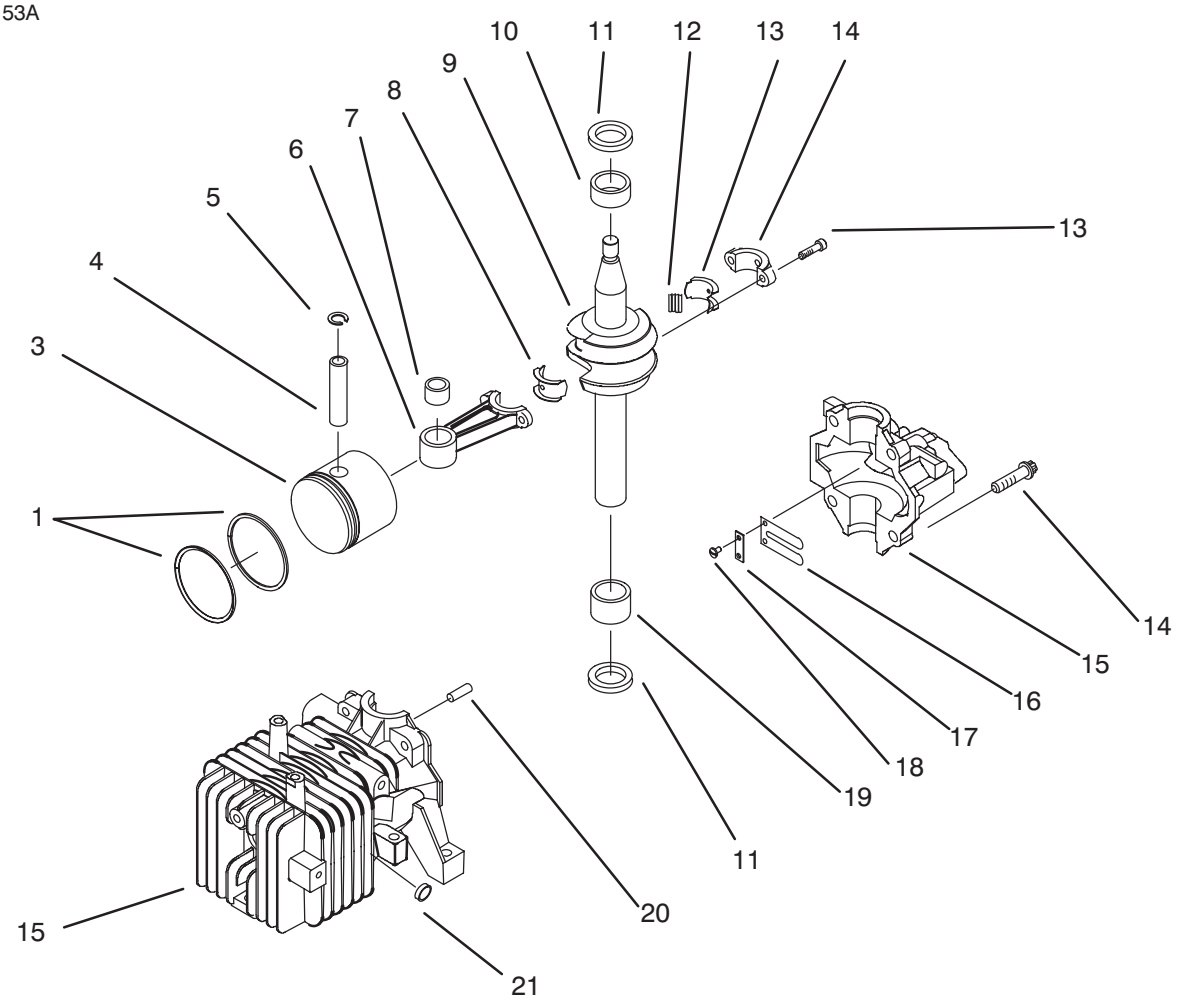

C−1295A

Block Assembly (Model No. 20442 Only)

Ref. No.	Part No.	Description	No. Used
1	681737	Set−Rings, Piston	1
3	92−4923	Piston & Ring Set	1
*	92−4925	Piston & Connecting Rod (Incl. Ref. #1, 3−7 & 13)	1
4	606608	Pin−Wrist	1
5	303712	Ring−Retaining	2
6	92−4921	Connecting Rod Assembly (Incl. Ref. #8, 12 & 13)	1
7	92−4927	Bearing	1
8	677982	Liner−Split (Set of 2)	1
9	92−6379	Crankshaft	1
10	681830	Bearing−Upper Main	1
11	611396	Seal−Oil	2

Ref. No.	Part No.	Description	No. Used
12	683911	Bearing−Needle	1
13	611393	Screw−Hex. Hd.	2
14	614636	Screw−Hex. Washer Hd.	3
15	93−4311	Cylinder & Crankcase Cover (Incl. Ref. #14, 16, 17, 18, 20, & 21)	1
16	602588	Reed −Carburetor	1
17	602587	Reed−Backup Plate	1
18	612872	Screw	2
19	681831	Bearing−Needle	1
20	609629	Dowel	1
21	609123	Plug−Core	4

*Not Illustrated

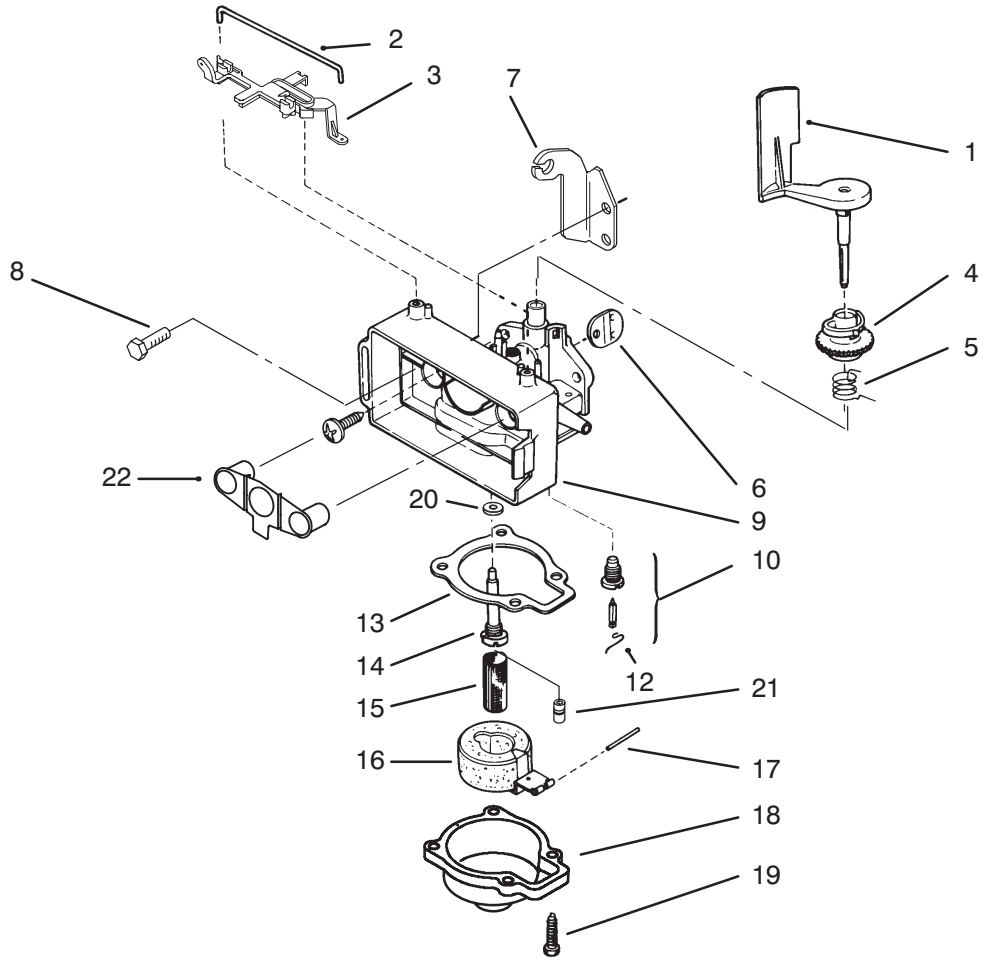

C−2130B

Carburetor Assembly (Model No. 20442 Only)

Ref. No.	Part No.	Description	No. Used
1	92−6376	Air Vane & Shaft	1
2	610165	Retainer−Speed Control	1
3	93−1225	Lever−Speed Adjust	1
4	610834	Collar−Air Vane	1
5	92−4944	Spring−Governor	1
6	92−6373	Disc−Throttle	1
7	92−4949	Bracket−Throttle Control	1
8	613269	Screw	2
9	92−6377	Carburetor Body	1
10	92−9697	Kit−Float Valve, Body & Seat (Incl. Ref. #12)	1
12	603145	Spring	1

Ref. No.	Part No.	Description	No. Used
13	602850	Gasket	1
14	92−6371	Nozzle	1
15	611071	Filter−Fuel	1
16	678113	Float & Arm Assembly	1
17	92−6389	Pin	1
18	92−9691	Float Chamber	1
19	608850	Screw	4
20	612383	Washer	1
21	92−6370	Main Jet	1
22	93−4320	Shield−Fuel	1
*	92−6385	Jet−High Altitude	1
*	92−9695	Carburetor Assembly	1

*Not Illustrated

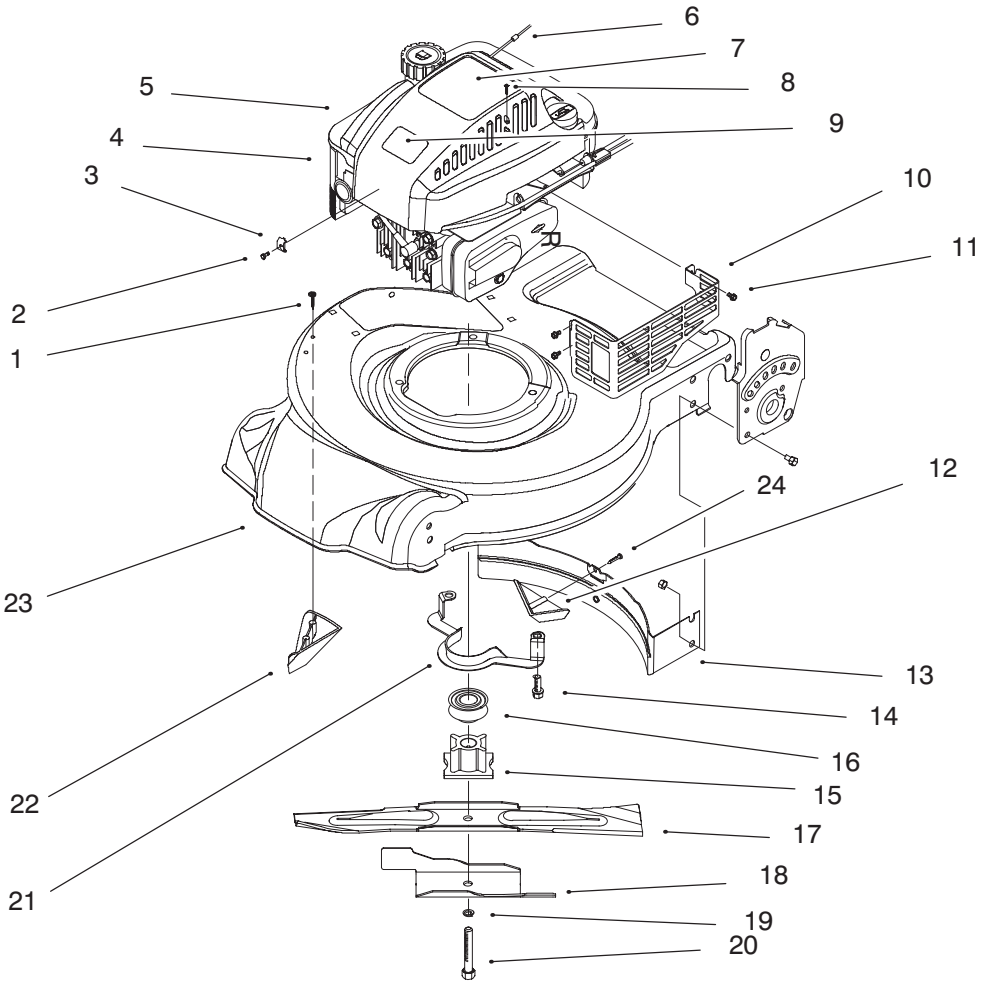

Engine Assembly #2

Ref. No.	Part No.	Description	No. Used
1	32144−111	Screw−PPH	2
2	93−8470	Screw−Clamp (F/W Eng.)	1
3	2210−249	Clamp−Casing (F/W Eng.) (Model No. 20444 Only)	1
4		Engine−Quantum 4 HP (Model No. 20444 Only)	1
5	93−0243	Shroud−Qt Wedge (Model No. 20444 Only)	1
6	2210−316	Rope−Stop (P/W Eng.) (Model No. 20444 Only)	1
7	93−0247	Decal−Engine (Model No. 20444 Only)	1
8	32144−121	Screw (Model No. 20444 Only)	2
9	92−2289	Plate−Logo	1
10	82−8550	Shield−Muffler (Model No. 20444 Only)	1
11	32144−73	Screw−Hex Washer Hd. Thread Forming (Model No. 20444 Only)	3

Ref. No.	Part No.	Description	No. Used
12	93−0217	Kicker−Rear	1
13	93−0223	Baffle−Rear	1
14	92−1624	Screw−Engine	3
15	62−7540	Retainer−Blade (Model No. 20444 Only)	1
16	62−7550	Pulley−Driver (Model No. 20444 Only)	1
17	93−0241	Blade−Steel Deck	1
18	93−0219	Accelerator	1
19	3253−22	Washer−Lock	1
20	26−0670	Bolt−Blade	1
21	93−0208	Guide−Belt (Model No. 20444 Only)	1
22	93−0218	Kicker−Side	1
23	16−9279	Deck−21” Steel SP (Incl. Ref. #6 pg.1, Ref. #34 pg. 2, & Ref. #16pg. 3)	1
24	93−0231	Screw	1

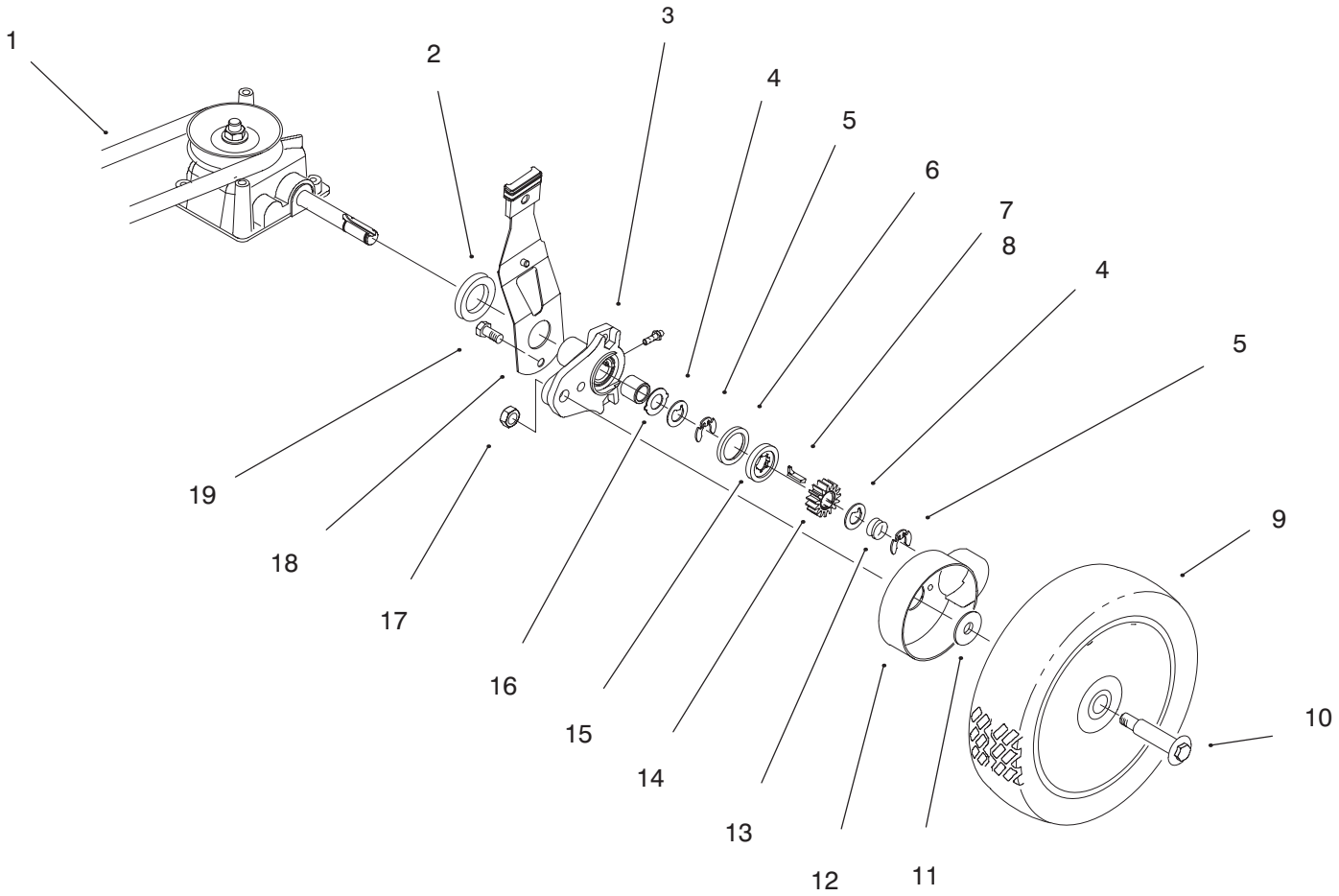

C–2248

Rear Axle Assembly

Ref. No.	Part No.	Description	No. Used
1	93–0232	V–Belt	1
2	614447	Spacer–Axle Shaft	2
3	92–7746	Height Adj. Arm Assembly	2
4	65–4740	Washer–Thrust	4
5	65–2720	Ring–Retaining	4
6	65–4710	Ring–Friction	2
7	66–6040	Key–Rocking R.H.	1
8	66–6050	Key–Rocking L.H.	1
9	92–9590	Wheel Assembly	2
10	92–1057	Bolt–Shoulder	2

Ref. No.	Part No.	Description	No. Used
11	614426	Washer–Stepped	2
12	614427	Cover–Wheel	2
13	65–4720	Spring–Compression	2
14	65–4750	Gear–Pinion	2
15	65–4760	Washer	2
16	65–4730	Washer–Thrust	2
17	610358	Nut–Lock	2
18	92–1004	Spring Arm Assembly	2
19	32144–85	Screw–Hex Hd.	2

3317–153A

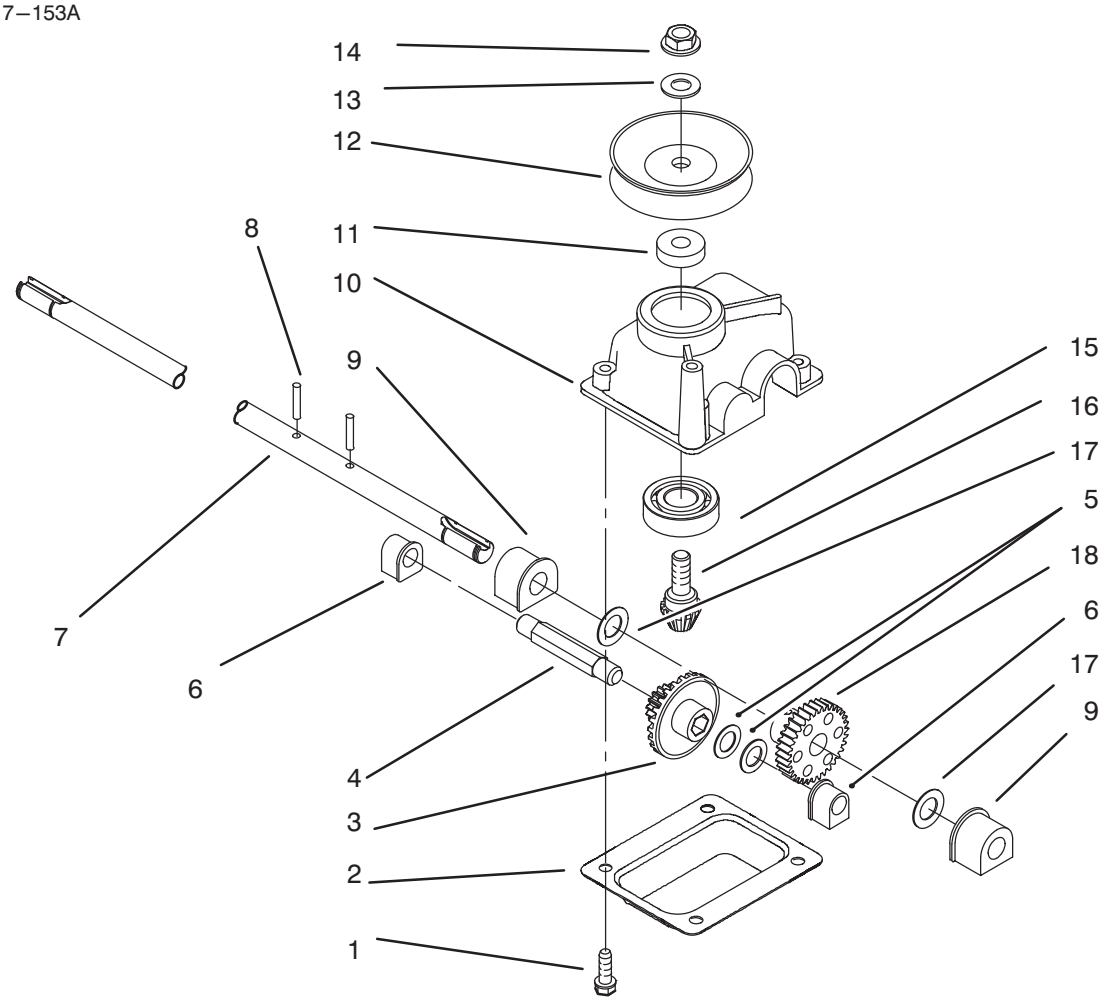

C–1292

Gear Case Assembly

Ref. No.	Part No.	Description	No. Used
1	49–2040	Screw–Taptite	4
2	614668	Cover–Gear Case	1
3	55–3760	Pinion–15 Tooth	1
4	614696	Shaft–Intermediate	1
5	36–4791	Washer	2
6	60–8750	Bushing	2
7	93–0239	Shaft–Output	1
8	3285–19	Pin–Groove	2
9	60–8850	Bushing–Output	2
10	92–7727	Gearcase	1

Ref. No.	Part No.	Description	No. Used
11	62–6660	Spacer	1
12	60–8840	Pulley–Half	2
13	3256–24	Washer	1
14	3296–5	Nut	1
15	38–7820	Bearing –Ball	1
16	60–8890	Gear–Bevel Pinion	1
17	36–4780	Washer–Thrust	2
18	614596	Gear 34 Tooth	1
*	93–0240	Gearcase ASM (Complete)	1

*Not Illustrated

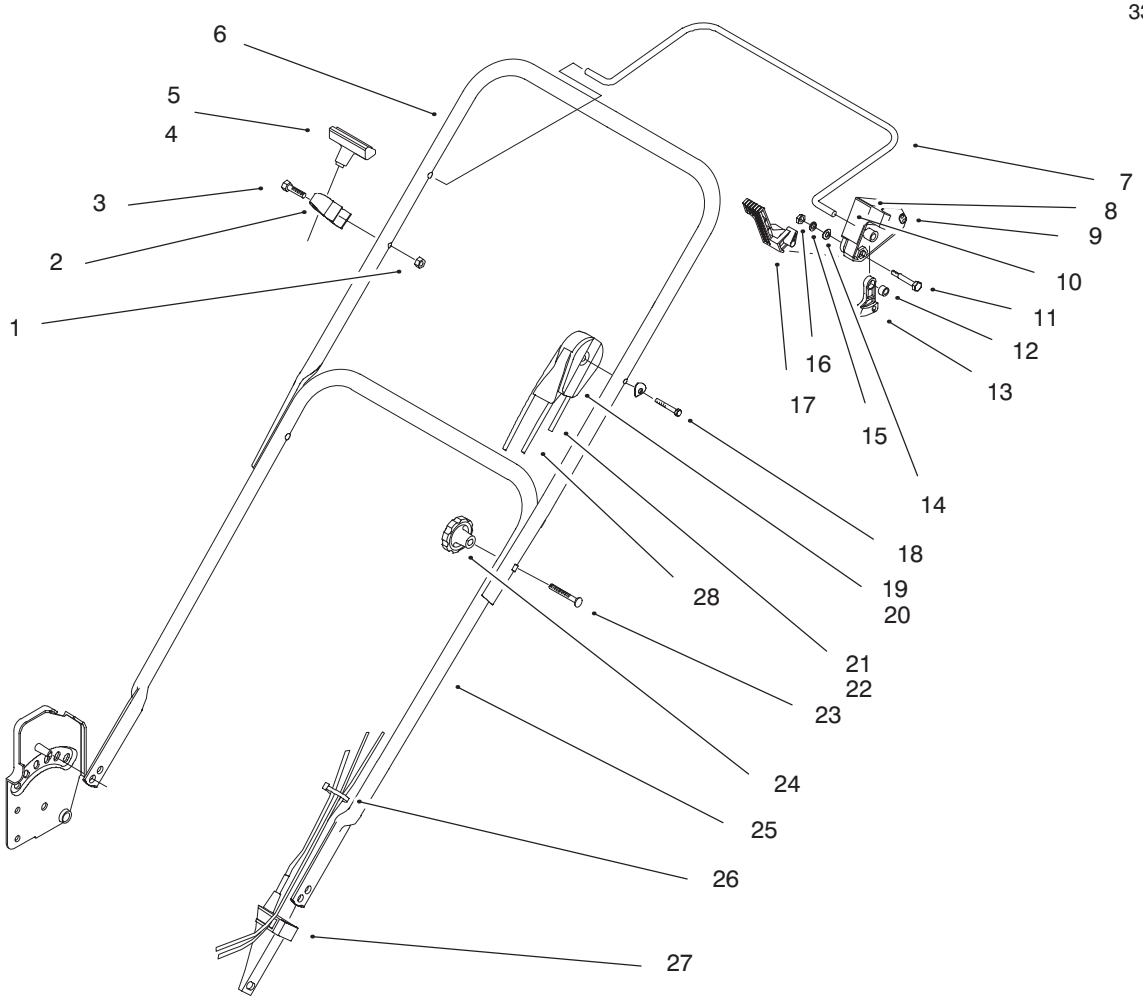

C−2249

Handle Assembly

Ref. No.	Part No.	Description	No. Used
1	3296−73	Nut−Lock	1
2	93−7388	Guide−Rope	1
3	321−51	Bolt−Hex	2
4	612825	Handle−Starter (Model No. 20442 Only)	1
5	612824	Clip−Rope Insert (Model No. 20442 Only)	1
6	93−0237	Handle−Upper	1
7	92−3135	Bar−Control	1
8	92−2292	Decal−Instruction	1
9	93−0340	Stop−Pivot	1
10	92−2280	Decal−Instruction	1
11	92−3132	Bolt−Shoulder	1
12	92−3133	Spacer−Lever	1
13	46−5520	Lever−Traction	1
14	92−2298	Washer−Spring	1
15	3256−49	Washer−Flat	1
16	3296−2	Nut−Lock	2
17	92−2299	Lever−Shift	1

Ref. No.	Part No.	Description	No. Used
18	93−0261	Curved Washer	1
19	93−0258	Cable−Throttle/Traction (Model No. 20444 Only)	1
20	93−0260	Cable−Throttle/Traction (Model No. 20442 Only)	1
21	93−0251	Cable−Brake (Model No. 20444 Only)	1
22	93−0255	Cable−Brake (Model No. 20442 Only)	1
23	92−2260	Screw−Handle	2
24	19−4050	Knob	2
25	93−0238	Handle−Lower	1
26	3290−378	Tie−Cable (Model No. 20444 Only)	1
26	3290−378	Tie−Cable (Model No. 20442 Only)	2
27	93−7380	Anchor−Cable	1
28	93−0259	Cable−Traction	1

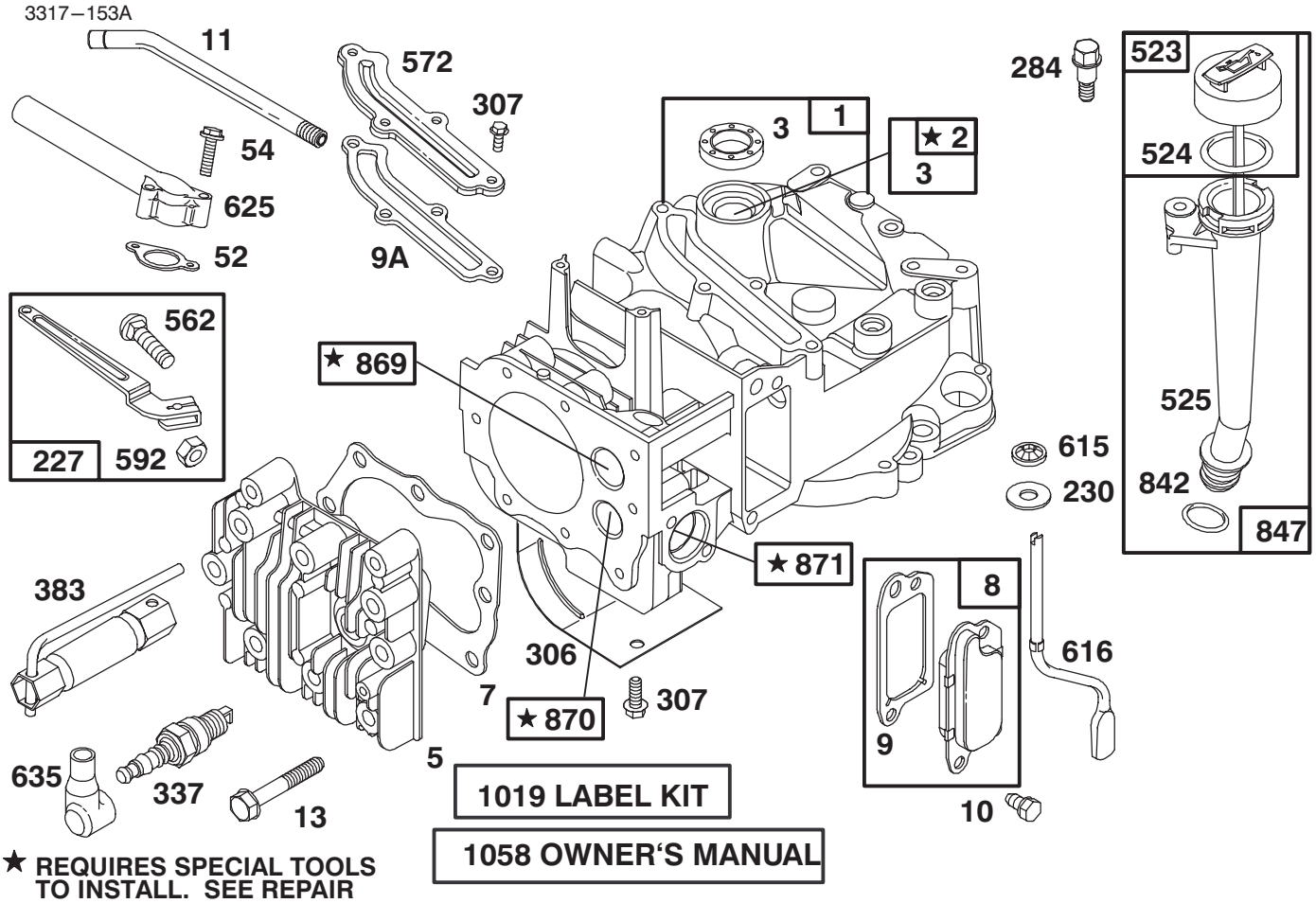

★ **REQUIRES SPECIAL TOOLS TO INSTALL. SEE REPAIR INSTRUCTION MANUAL.**

Assemblies include all parts shown in frames.

Cylinder Assembly
Briggs and Stratton 127802-0640–01

Ref. No.	Part No.	Description	No. Used
1	493260	Cylinder Assembly	1
2	293708	Bushing – Cylinder	1
★3	299819	Seal – Oil	1
5	214349	Head – Cylinder	1
★7	272916	Gasket – Cylinder Head	1
8	495786	Breather – Valve Chamber	1
★9	272481	Gasket – Valve Cover	1
★9A	272238	Gasket – Baffle Plate	1
10	94650	Screw – Breather Mtg.	1
11	231933	Tube – Breather	1
13	94547	Screw – Cylinder Head	1
★52	272199	Gasket – Intake Elbow	1
54	94526	Screw – Intake Elbow Mounting	1
227	492349	Lever Assembly – Gov.	1
230	67072	Washer – Gov. Crank	1
284	94511	Screw – Hex. Head	1
306	224324	Shield – Cylinder	1
307	94515	Screw – Hex. Head	1
337	802592	Plug – Spark	1
383	89838	Wrench – Spark Plug	1

Ref. No.	Part No.	Description	No. Used
523	495264	Cap With Dipstick – Oil Filler	1
★524	280393	Seal – Filler Tube	1
525	495265	Tube – Oil Filler	1
562	92613	Bolt – Governor Lever	1
572	224328	Baffle – Cylinder	1
592	231082	Nut – Hex.	1
615	94474	Fastener	1
616	262578	Crank – Governor	1
625	281085	Tube – Fuel Intake	1
635	66538	Elbow – Spark Plug	1
★842	280966	Seal – O-Ring	1
847	495263	Oil Fill Tube Assy.	1
869	213512	Seat – Intake Valve	1
870	213513	Seat – Exhaust Valve	1
871	262001	Guide – Exhaust Valve **Note:** 63709 Guide – Intake Valve	1
1019	494256	Label Kit	1
1058	272262	Owner's Manual	1

★ Included in Gasket Set–Part No. 496117.

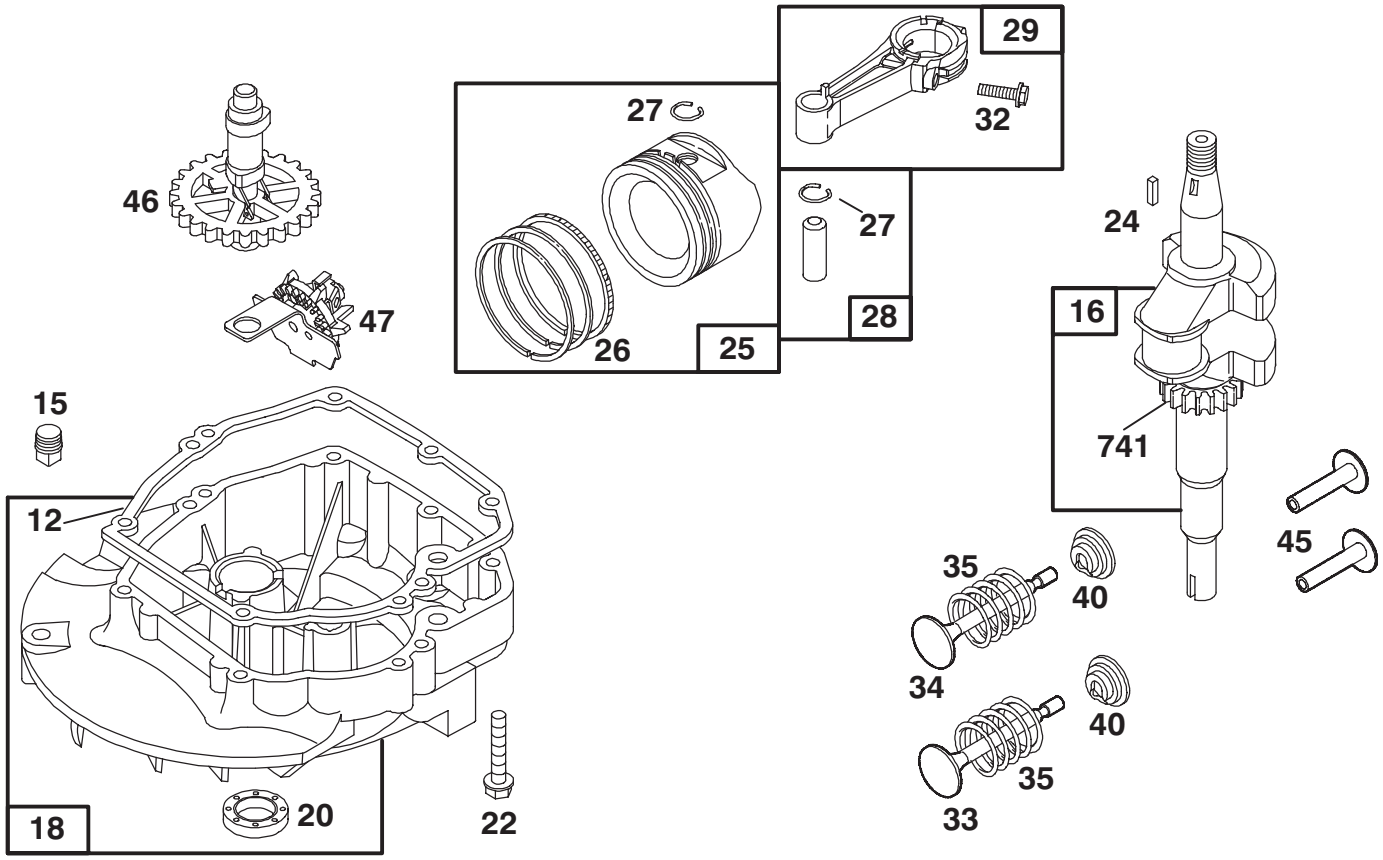

Assemblies include all parts shown in frames.

Crankshaft Assembly
Briggs and Stratton 127802-0640—01

Ref. No.	Part No.	Description	No. Used
★12	272198	Gasket — Crankcase	1
15	94720	Plug — Oil Drain	1
16	494546	Crankshaft	1
		Note: Order 94388 For Timing Gear Key.	1
18	493279	Sump — Engine	1
★20	399781	Seal — Oil	1
22	94220	Screw — Hex. Head	1
		Note: 94612 Screw — Hex. Head	1
		(One (1) Used in Hole Nearest Breather.)	1
24	222698	Key — Flywheel	1
25	493262	Piston Assy. (Standard)	1
	493385	Piston Assy. (.010” O.S.)	1
	493386	Piston Assy. (.020” O.S.)	1
	493387	Piston Assy. (.030” O.S.)	1
26	493261	Ring Set (Standard)	1
	493388	Ring Set (.010” O.S.)	1
	493389	Ring Set (.020” O.S.)	1
	493390	Ring Set (.030” O.S.)	1

Ref. No.	Part No.	Description	No. Used
27	26026	Lock — Piston Pin	1
28	298909	Pin — Piston (Standard)	1
	298908	Pin — Piston (.005” O.S.)	1
29	490566	Rod Assembly — Conn.	1
		Note: For Conn. Rod With .020” Undersize Crankpin Bearing — Order No. 490743.	1
32	94699	Screw — Conn. Rod	1
33	262651	Valve — Exhaust	1
34	262652	Valve — Intake	1
35	262224	Spring — Valve	1
40	93312	Retainer — Valve Spring	1
45	262204	Tappet — Valve	1
46	492828	Gear — Cam	1
47	493737	Slinger — Oil	1
741	262598	Gear — Timing	1

★Included in Gasket Set—Part No. 496117.

Obtain Parts from your Local Briggs and Stratton Dealer

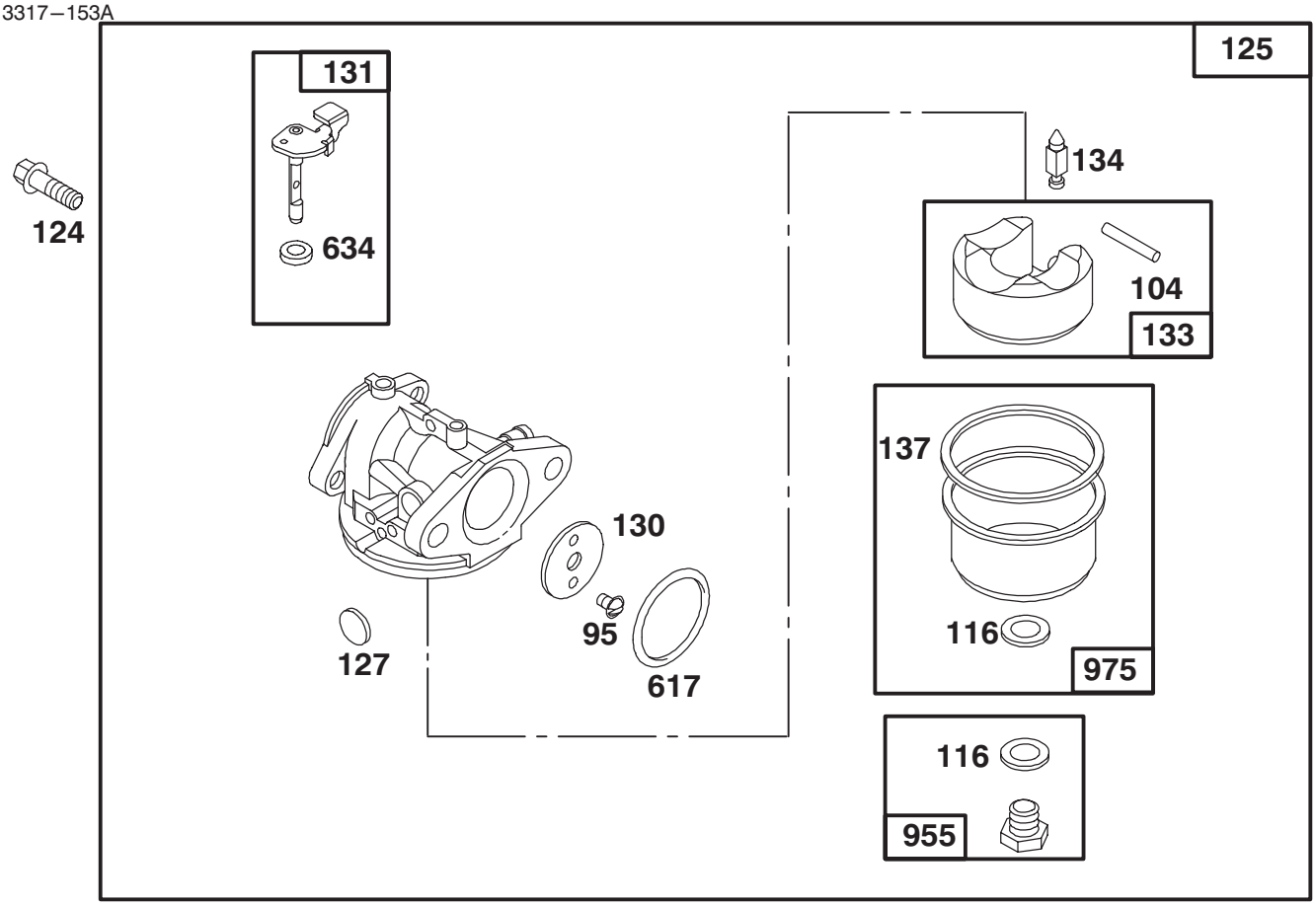

Assemblies include all parts shown in frames.

Carburetor Assembly
Briggs and Stratton 127802-0640–01

Ref. No.	Part No.	Description	No. Used
95	94098	Screw – Throttle Valve Mounting	1
●104	231371	Pin – Float Hinge	1
●◆116		Gasket–Sealing (Sold in Kit Only).	1
124	94525	Screw – Carburetor Mtg.	1
125	497314	Carburetor	1
●127		Plug – Welch (Sold in Kit Only).	1
130	224908	Valve – Throttle	1
131	493267	Shaft – Throttle	1
133	398187	Float Assy. – Carburetor	1

Ref. No.	Part No.	Description	No. Used
●134	398188	Valve – Inlet (Includes Seat)	1
●◆137		Gasket – Bowl (Sold in Kit Only).	1
●◆617	270344	Seal – Fuel Intake Tube	1
●◆634		Washer–Shaft (Sold in Kit Only).	1
955	497315	Screw – Bowl Mtg. (Std.)	1
		Note: 496495 Screw – Bowl Mtg. (High Altitude)	1
975	493640	Bowl Assy. – Carburetor	1

●Included in Carburetor Kit–Part No. 493762.
◆ Included in Carburetor Gasket Set–Part No. 490937.

Obtain Parts from your Local Briggs and Stratton Dealer

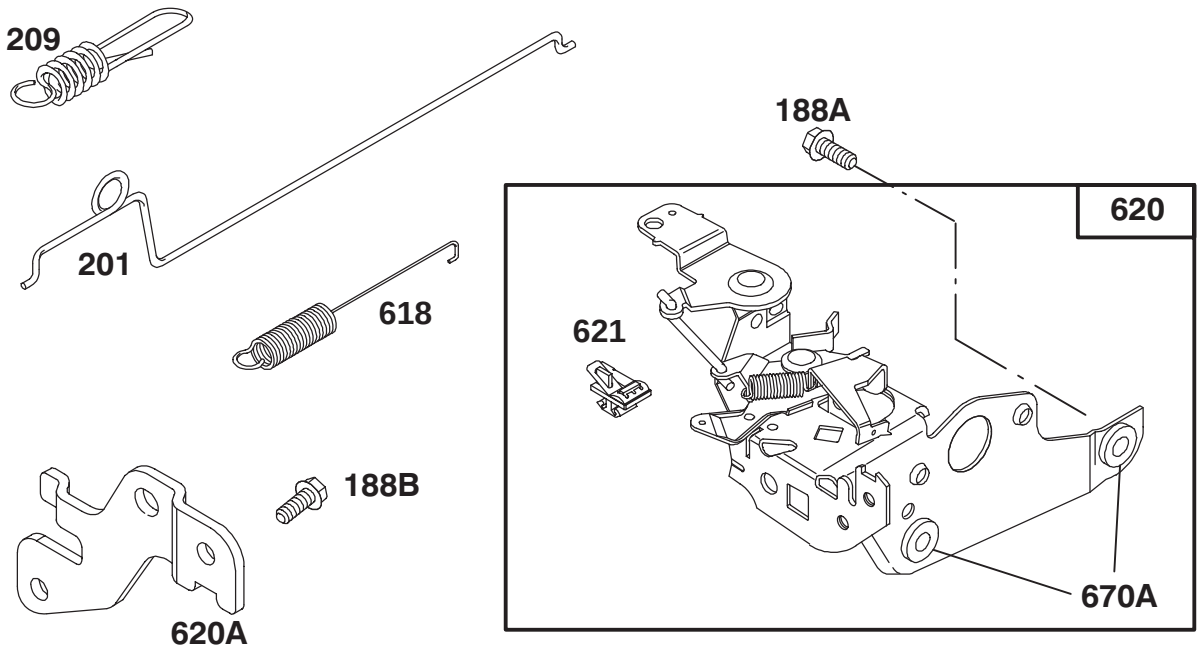

Assemblies include all parts shown in frames.

Carburetor Link Assembly
Briggs and Stratton 127802-0640—01

Ref. No.	Part No.	Description	No. Used
188A	94644	Screw — Hex. Head	1
188B	94602	Screw — Hex. Head	1
201	262579	Link — Governor	1
209	262661	Spring — Governor	1
618	262749	Spring — Return	1

Ref. No.	Part No.	Description	No. Used
620	497203	Bracket — Carburetor	1
620A	225152	Bracket — Control	1
621	396847	Switch — Stop	1
670A	493823	Spacer — Bracket	1

Obtain Parts from your Local Briggs and Stratton Dealer

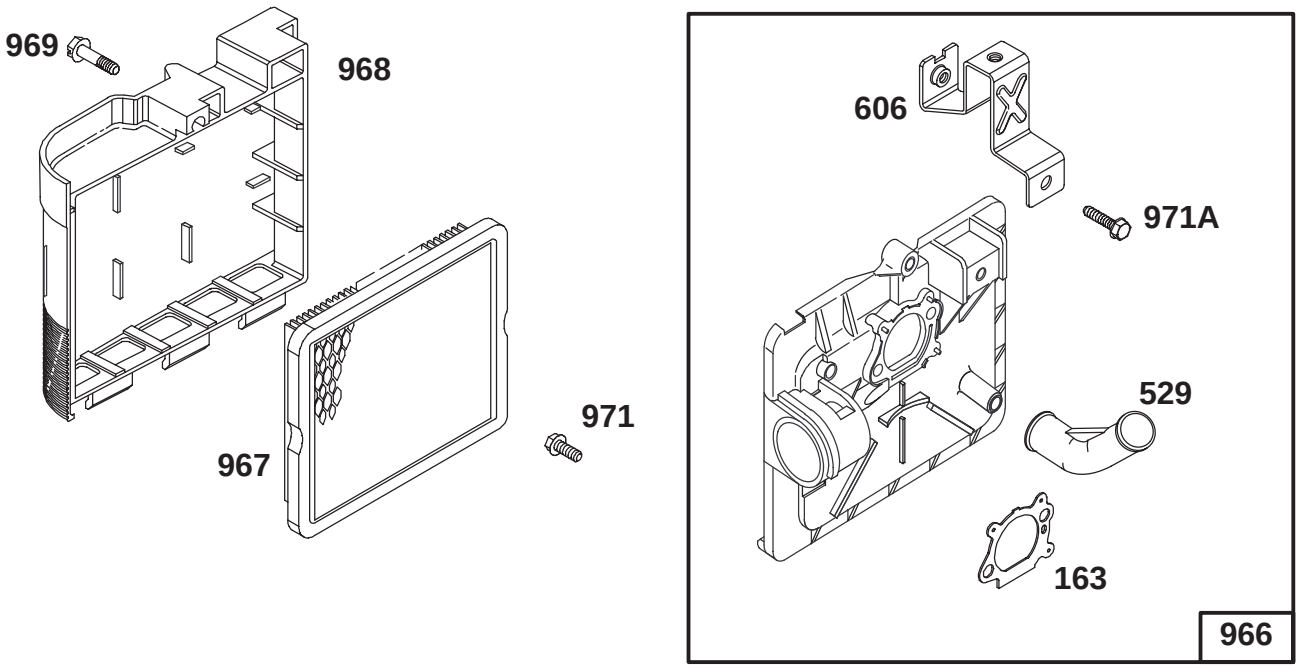

Assemblies include all parts shown in frames.

Air Cleaner Assembly
Briggs and Stratton 127802-0640—01

Ref. No.	Part No.	Description	No. Used
163	272653	Gasket — Air Cleaner	1
529	281299	Grommet — Breather	1
606	224815	Strap — Bracket	1
966	496116	Base — Air Cleaner	1
967	491588	Filter — Air	1

Ref. No.	Part No.	Description	No. Used
968	281340	Cover — Air Cleaner	1
969	94120	Screw — Cover Mtg.	1
971	94121	Screw — Air Cleaner	1
971A	94749	Screw — Hex. Head	1

★Included in Gasket Set—Part No. 496117.

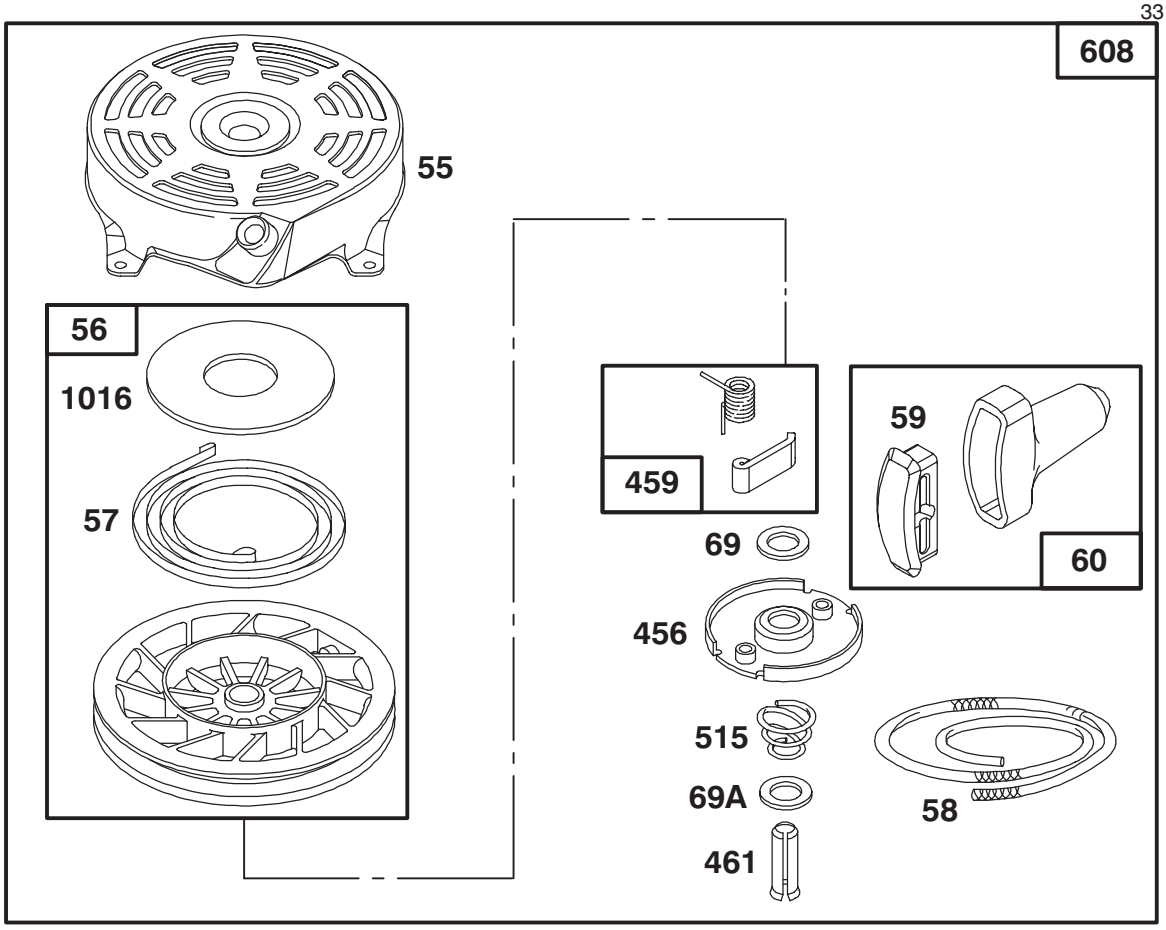

Assemblies include all parts shown in frames.

Starter Assembly
Briggs and Stratton 127802-0640–01

Ref. No.	Part No.	Description	No. Used
55	492831	Housing – Rewind Starter	1
56	493824	Pulley – Rewind Starter	1
57	262594	Spring – Rewind Starter	1
58	280399	Rope – Rewind Starter	1
59	396892	Insert – Handle	1
60	393152	Handle – Rewind Starter	1
69	280973	Washer – Rewind Starter	1
69A	224322	Washer – Rewind Starter	1
456	224321	Retainer – Rewind Starter	1

Ref. No.	Part No.	Description	No. Used
459	492833	Pawl – Starter	1
461	262626	Pin – Starter	1
515	262625	Spring – Torsion	1
608	493295	Starter Assy. – Rewind	1
		Includes:	
		94128 Screw – Hex. Hd.	1
		92987 Nut – Hex.	1
1016	224278	Cover – Rewind Starter	1

Obtain Parts from your Local Briggs and Stratton Dealer

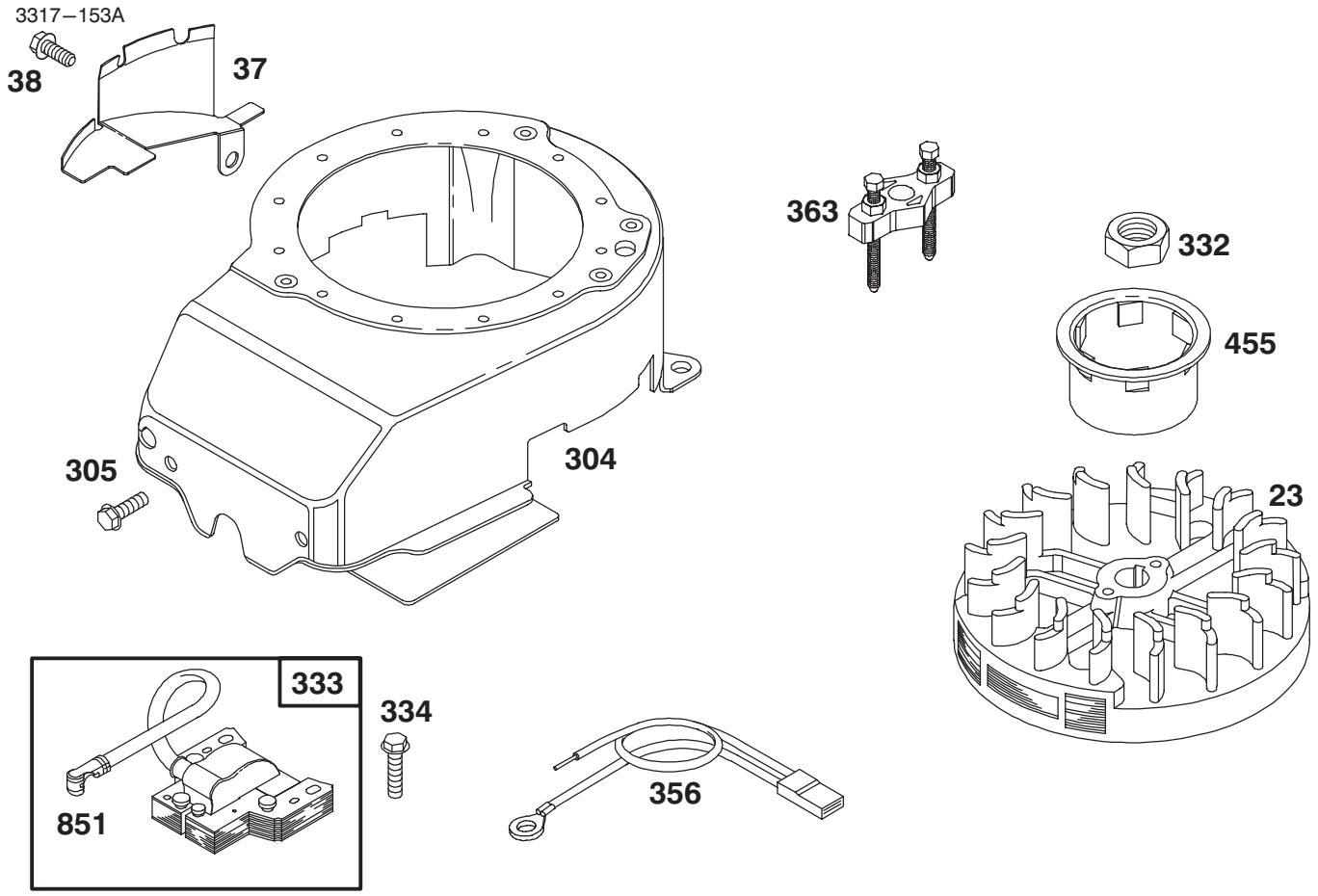

Assemblies include all parts shown in frames.

Flywheel Assembly
Briggs and Stratton 127802-0640–01

Ref. No.	Part No.	Description	No. Used
23	492177	Flywheel	1
37	224511	Guard – Flywheel	1
38	94786	Screw – Hex. Head	1
304	493294	Housing – Blower	1
305	94786	Screw – Sem	1
332	92284	Nut – Flywheel	1

Ref. No.	Part No.	Description	No. Used
333	802574	Armature – Magneto	1
334	94731	Screw – Sem	1
356	398808	Wire – Ground	1
363	19069	Puller – Flywheel	1
455	224250	Cup – Starter	1
851	493880	Terminal – Ignition Cable	1

Obtain Parts from your Local Briggs and Stratton Dealer

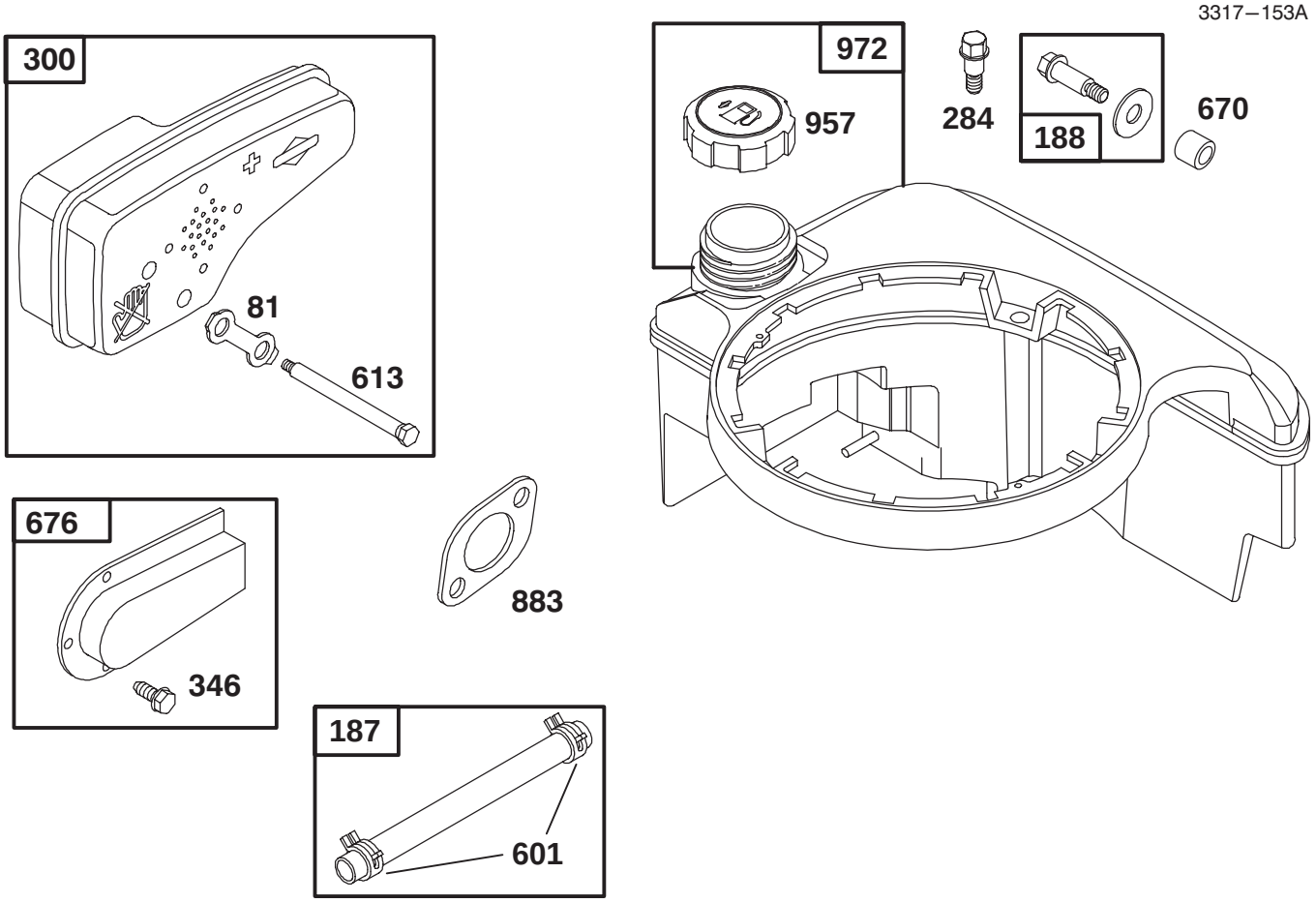

Assemblies include all parts shown in frames.

Muffler and Fuel Tank Assembly
Briggs and Stratton 127802-0640—01

Ref. No.	Part No.	Description	No. Used
81	223664	Lock — Muffler Screw	1
187	492790	Hose — Fuel	1
188	398540	Screw — Tank Mounting	1
284	94511	Screw — Hex. Head	1
300	490547	Muffler — Exhaust	1
346	93705	Screw — Hex. Head	1
601	93807	Clamp — Hose	1

Ref. No.	Part No.	Description	No. Used
613	94231	Screw — Muffler Mtg.	1
670	280512	Spacer — Fuel Tank	1
676	493871	Deflector — Muffler	1
⋆883	272253	Gasket — Exhaust	1
957	397974	Cap Assy. — Fuel	1
972	495224	Tank Assembly — Fuel	1

Obtain Parts from your Local Briggs and Stratton Dealer

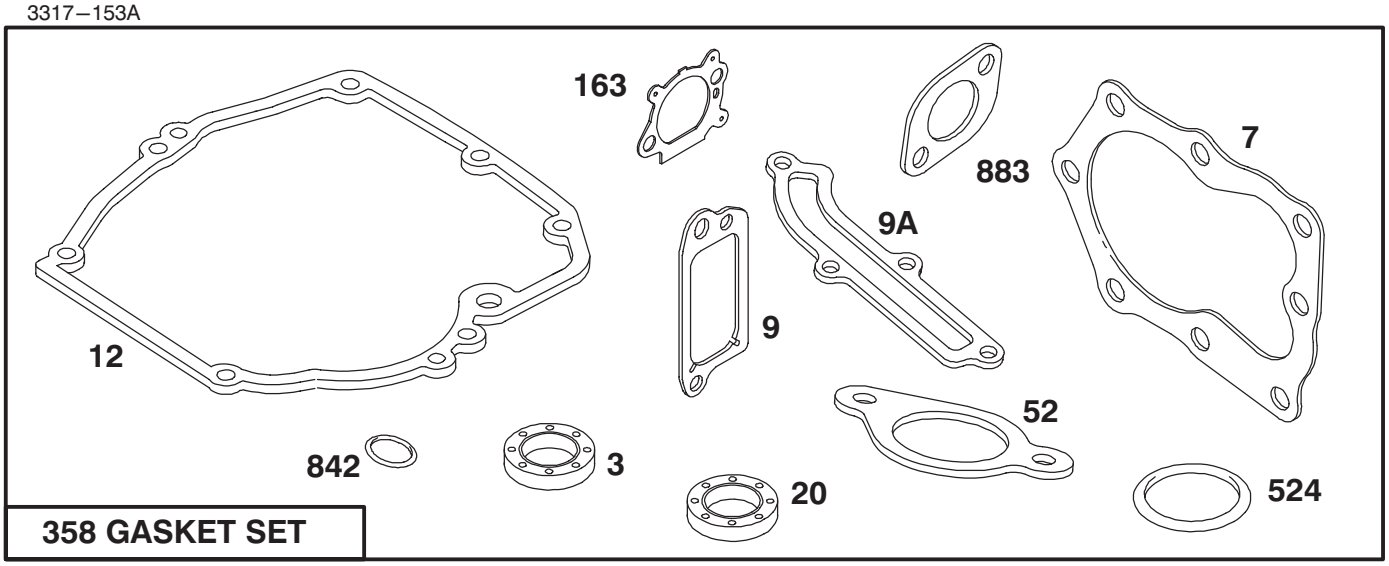

358 GASKET SET

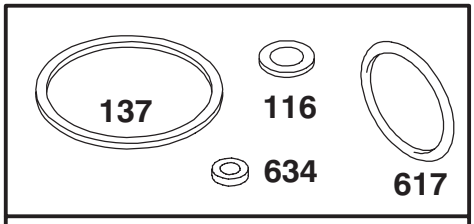

977 CARBURETOR GASKET SET

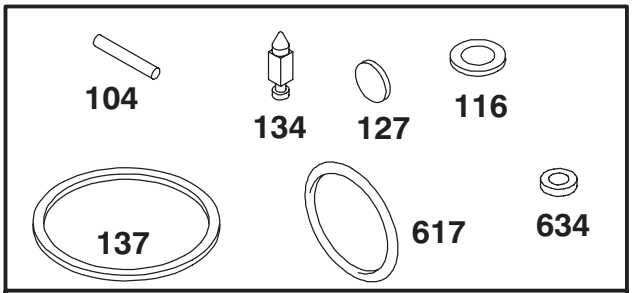

121 CARBURETOR KIT

Assemblies include all parts shown in frames.

Gasket Assembly
Briggs and Stratton 127802-0640–01

Ref. No.	Part No.	Description	No. Used
★3	299819	Seal – Oil	1
★7	272916	Gasket – Cylinder Hd.	1
★9	272481	Gasket – Valve Cover	1
★9A	272238	Gasket – Baffle Plate	1
★12	272198	Gasket – Crankcase	1
★20	399781	Seal – Oil	1
★52	272199	Gasket – Intake Elbow	1
●104	231371	Pin – Float Hinge	1
●◆116		Gasket – Sealing (Sold in Kit Only).	1
121	493762	Carburetor Kit	1
●127		Plug – Welch (Sold in Kit Only).	1

Ref. No.	Part No.	Description	No. Used
●134	398188	Valve – Inlet (Includes Seat)	1
●◆137		Gasket – Bowl (Sold in Kit Only).	1
★163	272653	Gasket – Air Cleaner	1
358	497316	Gasket Set	1
★524	280393	Seal – Filler Tube	1
●◆617	270344	Seal – Fuel Intake Tube	1
●◆634		Washer – Shaft (Sold in Kit Only).	1
★842	280966	Seal – O-Ring	1
★883	272253	Gasket – Exhaust	1
977	490937	Gasket Set – Carburetor	1

● Included in Carburetor Kit–Part No. 493762.
◆ Included in Carburetor Gasket Set–Part No. 490937.

Obtain Parts from your Local Briggs and Stratton Dealer

★ Included in Gasket Set–Part No. 496117.

TORO PART NUMBER INDEX

Part No.	Description	Pg. No.	Ref. No.	Qty.
	Engine	3	9	1
	Engine – Quantum 4 HP	8	4	1
130743	Nut	4	19	1
303712	Ring – Retaining	6	5	2
316959	Washer – Lock	4	18	1
602587	Reed – Backup Plate	6	17	1
602588	Reed – Carburetor	6	16	1
602850	Gasket	7	13	1
603145	Spring	7	12	1
605120	Grommet	1	12	1
606608	Pin – Wrist	6	4	1
607199	Key	4	13	1
607601	Screw	5	8	4
608850	Screw	7	19	4
609123	Plug – Core	6	21	4
609471	Screw	5	10	3
609482	Screw	4	9	2
609493	Element – Air Filter	4	3	1
609629	Dowel	6	20	1
610165	Retainer – Speed Control	7	2	1
610358	Nut – Lock	9	17	2
610834	Collar – Air Vane	7	4	1
611071	Filter – Fuel	7	15	1
611393	Screw – Hex. Hd.	6	13	2
611396	Seal – Oil	6	11	2
612383	Washer	7	20	1
612824	Clip – Rope Insert	11	5	1
612825	Handle – Starter	11	4	1
612872	Screw	6	18	2
613208	Screw – Hex Washer Hd.	5	16	2
613269	Screw	7	8	2
614009	Plug – Spark	5	13	1
614426	Washer – Stepped	9	11	2
614427	Cover – Wheel	9	12	2
614447	Spacer – Axle Shaft	9	2	2
614596	Gear 34 Tooth	10	18	1
614636	Screw – Hex. Washer Hd.	6	14	3
614637	Bracket – Wheel Height Adj.	1	27	2
614640	Hub – Starter	4	17	1
614650	Bolt – Shoulder	1	24	2
614654	Plate – Muffler	5	7	1
614668	Cover – Gear Case	10	2	1
614672	Bolt – Shoulder	1	25	2
614673	Spacer	1	13	1
614687	Spring Arm – Front	1	22	2
614696	Shaft – Intermediate	10	4	1
614699	Screw	4	1	3
614702	Screw	4	14	4
614702	Screw	5	17	1
677982	Liner – Split (Set of 2)	6	8	1
678113	Float & Arm Assembly	7	16	1
681678	Lead & Cover Assembly	5	20	1
681737	Set – Rings, Piston	6	1	1
681830	Bearing – Upper Main	6	10	1
681831	Bearing – Needle	6	19	1
683911	Bearing – Needle	6	12	1
684049	Ignition Assembly	5	14	1
684743	Flywheel Assembly	4	16	1
12–5450	Screw – Thread Forming	5	4	1
16–9269	Cover – Recycling	1	1	1
16–9279	Deck – 21 Steel SP	8	23	1
19–4050	Knob	11	24	2
26–0670	Bolt – Blade	8	20	1
36–4780	Washer – Thrust	10	17	2
36–4791	Washer	10	5	2
38–7820	Bearing – Ball	10	15	1
39–5770	Decal – Danger	3	16	1
40–1940	Washer	1	26	2
44–2750	Body – Primer	4	21	1
44–3175	Hose – Primer	4	5	1
46–5520	Lever – Traction	11	13	1
49–2040	Screw – Hex Hd.	1	9	1
49–2040	Screw – Taptite	10	1	4
52–7320	Retainer – Blade	3	14	1
53–4690	Stop – Ground Strap	5	5	1
55–3578	Gas Cap Assembly	3	6	1
55–3760	Pinion – 15 Tooth	10	3	1
60–8750	Bushing	10	6	2
60–8840	Pulley – Half	10	12	2
60–8850	Bushing – Output	10	9	2
60–8890	Gear – Bevel Pinion	10	16	1
60–9010	Strap – Ground	5	2	1
62–6660	Spacer	10	11	1
62–7540	Retainer – Blade	8	15	1
62–7550	Pulley – Driver	8	16	1
65–2720	Ring – Retaining	9	5	4
65–4710	Ring – Friction	9	6	2
65–4720	Spring – Compression	9	13	2
65–4730	Washer – Thrust	9	16	2
65–4740	Washer – Thrust	9	4	4
65–4750	Gear – Pinion	9	14	2
65–4760	Washer	9	15	2
66–5370	Spring – Compression	3	17	1
66–5370	Spring – Compression	5	21	1
66–5380	Plate – Brake Assembly	5	18	1
66–6040	Key – Rocking R.H.	9	7	1
66–6050	Key – Rocking L.H.	9	8	1
66–7460	Bulb – Primer	4	22	1
68–3632	Line – Fuel	3	8	1
82–8550	Shield – Muffler	8	10	1
84–7820	Plate – Brake Mount	5	15	1
85–7060	Decal – Danger	1	4	1
92–1004	Spring Arm Assembly	9	18	2
92–1008	Knob – Height Adjust	1	21	4
92–1057	Bolt – Shoulder	9	10	2
92–1156	Wire – Brake Switch Lead	5	6	1
92–1616	Screw	1	11	1
92–1624	Screw – Engine	8	14	3
92–1701	Rope – Stop	3	5	1
92–2260	Screw – Handle	11	23	2
92–2280	Decal – Instruction	11	10	1
92–2289	Plate – Logo	8	9	1
92–2292	Decal – Instruction	11	8	1
92–2298	Washer – Spring	11	14	1
92–2299	Lever – Shift	11	17	1
92–2914	Decal – HOC R.H.	1	17	1
92–2915	Decal – HOC L.H.	1	16	1
92–2925	Strap – Insulation	5	3	1
92–3132	Bolt – Shoulder	11	11	1
92–3133	Spacer – Lever	11	12	1
92–3135	Bar – Control	11	7	1
92–4881	Plate – Height Adjust	2	33	2
92–4890	Washer	1	28	2
92–4921	Connecting Rod Assembly	6	6	1
92–4923	Piston & Ring Set	6	3	1
92–4925	Piston & Connecting Rod	6	*	1
92–4927	Bearing	6	7	1
92–4944	Spring – Governor	7	5	1

*Not Illustrated

TORO PART NUMBER INDEX (Cont.)

Part No.	Description	Pg. No.	Ref. No.	Qty.
92–4948	Gasket – Carburetor	4	7	2
92–4949	Bracket – Throttle Control	7	7	1
92–6370	Main Jet	7	21	1
92–6371	Nozzle	7	14	1
92–6373	Disc – Throttle	7	6	1
92–6376	Air Vane & Shaft	7	1	1
92–6377	Carburetor Body	7	9	1
92–6379	Crankshaft	6	9	1
92–6385	Jet – High Altitude	7	*	1
92–6389	Pin	7	17	1
92–6396	Shroud – Engine	3	1	1
92–7727	Gearcase	10	10	1
92–7746	Height Adj. Arm Assembly	9	3	2
92–8647	Shield – Trailing	1	19	1
92–9590	Wheel Assembly	9	9	2
92–9591	Wheel Assembly	1	23	2
92–9691	Float Chamber	7	18	1
92–9693	Short Block Assembly	4	12	1
92–9695	Carburetor Assembly	7	*	1
92–9695	Carburetor Assembly	4	10	1
92–9697	Kit – Float Valve, Body	7	10	1
92–9698	Screw – Shoulder	5	19	1
93–0208	Guide – Belt	8	21	1
93–0209	Cover – Belt	1	7	1
93–0216	Kicker – Front	2	32	1
93–0217	Kicker – Rear	8	12	1
93–0218	Kicker – Side	8	22	1
93–0219	Accelerator	8	18	1
93–0222	Baffle – Front	1	31	1
93–0223	Baffle – Rear	8	13	1
93–0228	Brkt. – Belt Guide	1	10	1
93–0231	Screw	8	24	1
93–0231	Screw – Plastite	1	30	1
93–0232	V–Belt	9	1	1
93–0233	Bracket – Handle LH	1	15	1
93–0234	Bracket – Handle RH	1	5	1
93–0237	Handle – Upper	11	6	1
93–0238	Handle – Lower	11	25	1
93–0239	Shaft – Output	10	7	1
93–0240	Gearcase Ass'y Complete	10	*	1
93–0240	Transmission Assembly	1	14	1
93–0241	Blade – Steel Deck	8	17	1
93–0242	Grommet	1	2	4
93–0243	Shroud – Qt Wedge	8	5	1
93–0245	Decal – Deck	3	15	1
93–0246	Decal – Engine	3	3	1
93–0247	Decal – Engine	8	7	1
93–0248	Decal – Warning	1	6	1
93–0251	Cable – Brake	11	21	1
93–0255	Cable – Brake	11	22	1
93–0258	Cable – Throttle/Traction	11	19	1
93–0259	Cable – Traction	11	28	1
93–0260	Cable – Throttle/Traction	11	20	1
93–0261	Curved Washer	11	18	1
93–0262	Decal – Warning	2	34	1
93–0278	Pulley – Driver	3	13	1
93–0340	Stop – Pivot	11	9	1
93–1108	Cover – Muffler	5	11	1
93–1200	Cover – Strap	3	4	1
93–1216	Base – Shroud	4	15	1
93–1217	Baffle	5	9	1
93–1225	Lever – Speed Adjust	7	3	1
93–1227	Shield – Carburetor	4	6	1
93–1231	Cover – Air Filter	4	2	1
93–1233	Gasket – Exhaust	5	12	1
93–1248	Shroud	4	20	1
93–4196	Shield – Grass	3	12	1
93–4302	Screw – Sems	3	2	3
93–4304	Rope	4	23	1
93–4311	Cylinder & Crankcase Cover	6	15	1
93–4320	Plug	4	4	1
93–4320	Shield – Fuel	7	22	1
93–7380	Anchor – Cable	11	27	1
93–7388	Guide – Rope	11	2	1
93–8470	Screw – Clamp (P/W Eng.)	8	2	1
2210–249	Clamp – Casing (P/W Eng.)	8	3	1
2210–316	Rope – Stop (P/W Eng.)	8	6	1
321–51	Bolt – Hex	11	3	2
322–3	Screw – Hex Hd. Cap	1	18	6
3253–22	Washer – Lock	8	19	1
3256–24	Washer	10	13	1
3256–49	Washer – Flat	11	15	1
3285–19	Pin – Groove	10	8	2
3290–378	Tie – Cable	11	26	1
3290–378	Tie – Cable	11	26	2
3290–459	Rivet	5	1	2
3296–2	Nut – Lock	11	16	2
3296–2	Nut – Lock	2	36	1
3296–5	Nut	10	14	1
3296–29	Nut – Lock	1	20	6
3296–39	Nut – Lock	1	29	2
3296–73	Nut – Lock	11	1	1
32104–118	Screw – PH	3	7	2
32105–27	Screw – Hex Washer Hd.	2	35	1
32144–4	Screw – Tap.	1	3	3
32144–73	Screw – Hex Washer Hd.	8	11	3
32144–85	Screw – Hex Hd.	9	19	2
32144–111	Screw – PPH	8	1	2
32144–119	Screw – Thread Form	1	8	1
32144–121	Screw	8	8	2

OPTIONAL EQUIPMENT

Recycler Side Discharge Kit .... Model No. 59291
Recycler Bagging Kit ..... Model No. 59290

*Not Illustrated

PRODUCT CHANGES

In an effort to make improvements available to TORO owners as quickly as possible, minor changes are incorporated into Toro's products from time to time that do not become immediately shown in the Parts Catalog. If such a change has been made in your unit, which is not reflected in your manual, see your TORO Distributor or his Authorized TORO Service Dealer for information and part numbers.

COUNTRIES OTHER THAN THE UNITED STATES OR CANADA

Customers who have purchased TORO products exported from the United States or Canada should contact their Toro Distributor (Dealer) to obtain guarantee policies for your country, province or state. If for any reason you are dissatisfied with your Distributor's service or have difficulty obtaining guarantee information, contact the TORO importer. If all other remedies fail, you may contact us at The Toro Company.

MAINTENANCE RECORD

Date								

MAINTENANCE RECORD

Date								