FORM NO. 3312-100

TORO®

MODEL NO. 38350 — 3000001 & UP

PARTS CATALOG

TORO GAS POWER SHOVEL

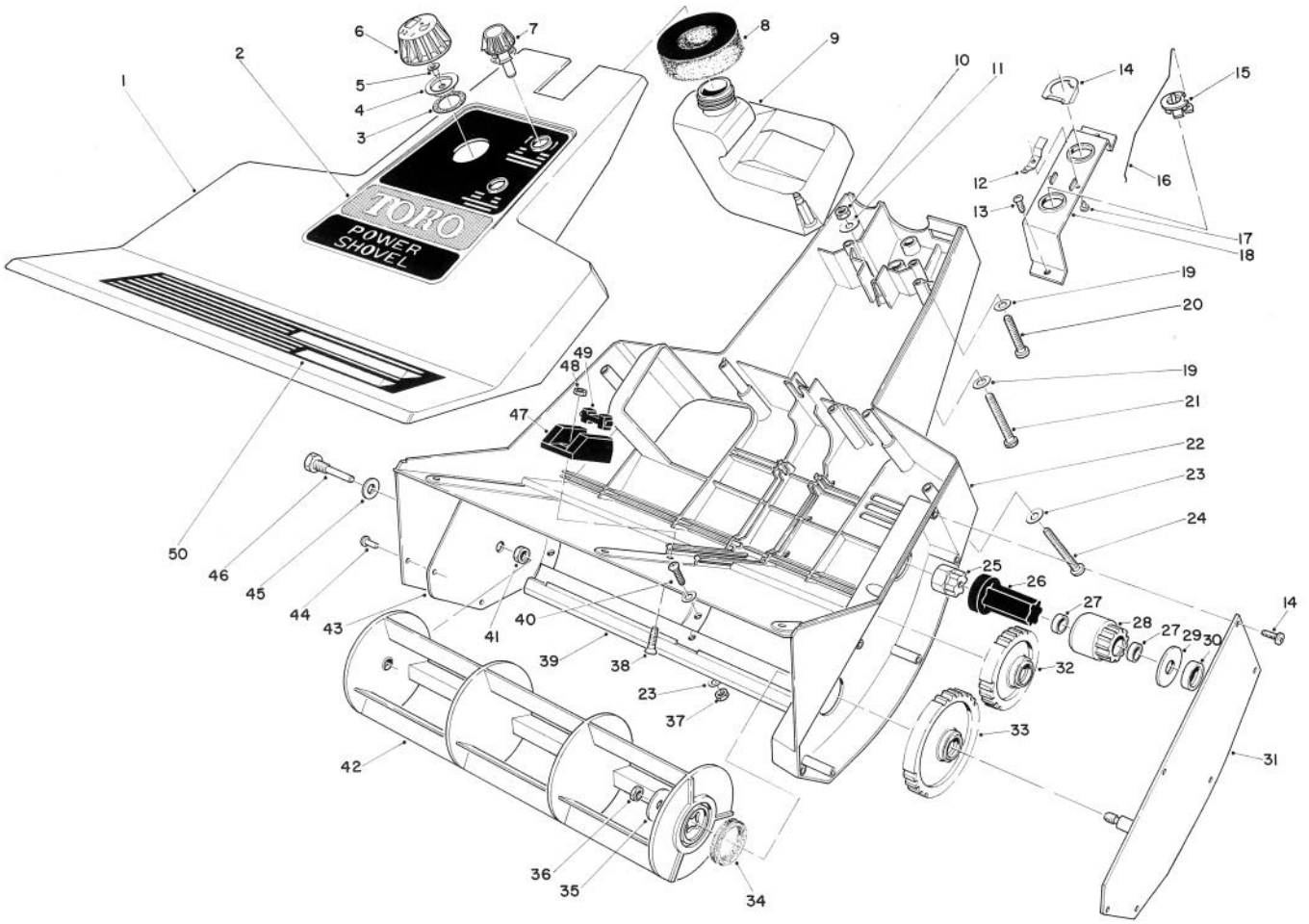

ROTOR HOUSING ASSEMBLY

Ref. No.	Part No.	Description	No. Used
1	11-3359	Insert — Shroud Assembly (Incl. Ref. #50)	1
2	44-3150	Decal Controls	1
3	42-5910	Gasket — Gas Cap	1
4	42-5680	Insert — Gas Cap	1
5	42-5760	Valve — Umbrella/Combination	1
6	44-3120	Gas Cap Assembly (Incl. Ref. #3-5)	1
7	44-2800	Knob — Control	2
8	25-1610	Pad — Foam	1
9	44-2950	Tank — Gas	1
10	3296-42	Nut — Lock	2
11	3-7501	Washer	2
12	46-6750	Contact Switch	2
13	32104-118	Screw — Self Tapping	8

Ref. No.	Part No.	Description	No. Used
14	46-6760	Actuator Switch	1
15	44-2810	Control Lower	2
16	46-2000	Linkage Choke	1
17	3290-56	Rivet	2
18	44-2770	Bracket — Controls	1
19	3256-16	Washer — Plain	2
20	3274-58	Screw — Cap Hex Socket Hd.	1
21	3274-60	Screw — Cap Hex Socket Hd.	1
22	46-5990	Housing (Incl. Ref. #43 & 44)	1
23	3256-51	Washer — Plain	12
24	32105-6	Screw — Machine Slotted Hex. Hd.	6
25	44-2890	Adapter — Crankshaft	1
26	38-8570	Coupling — Drive	1
27	252-102	Bearing	2

COPYRIGHT © ALL RIGHTS RESERVED

The Toro Company — 1982
MINNEAPOLIS, MN 55420 — U.S.A.

PRICE $1.00

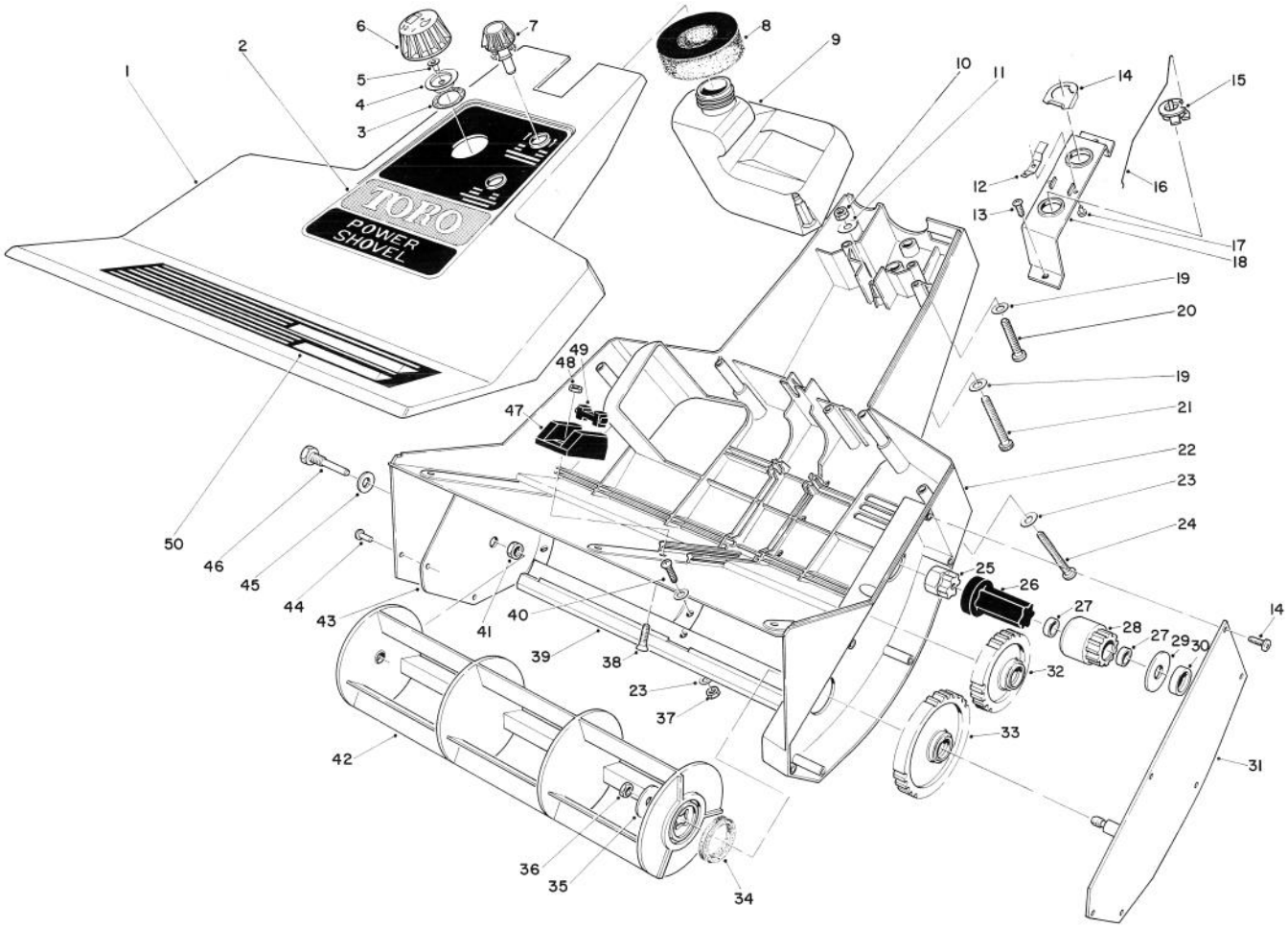

ROTOR HOUSING ASSEMBLY (Continued)

Ref. No.	Part No.	Description	No. Used
28	44-2820	Gear Assembly – Drive (Incl. Ref. #27)	2
29	44-3190	Washer – Thrust	1
30	44-3080	Spacer Gear	1
31	44-3070	Gear Carrier Plate	1
32	44-2780	Gear Assembly – Idler	1
33	44-2740	Gear Assembly – Rotor	1
34	44-2710	Washer – Felt	1
35	3256-58	Washer – Plain Flat	1
36	3296-56	Nut – Lock	1
37	3296-54	Nut – Lock	3
38	32108-98	Screw – Machine Slotted Flat Hd.	4

Ref. No.	Part No.	Description	No. Used
39	44-2960	Scraper	1
40	3250-29	Screw – Machine Cross Recess Pan Hd.	3
41	32146-21	Nut – Jam Locking	1
42	44-2730	Rotor	1
43		Plate Housing Reinforcement	1
44	3290-55	Rivet	2
45	3256-24	Washer Plain	1
46	38-8210	Pin – Rotor	1
47	44-3090	Mount – Engine Upper	1
48	3296-2	Nut – Lock	1
49	44-2860	Mount – Rubber Isolator	4
50	44-3160	Decal – Warning	1

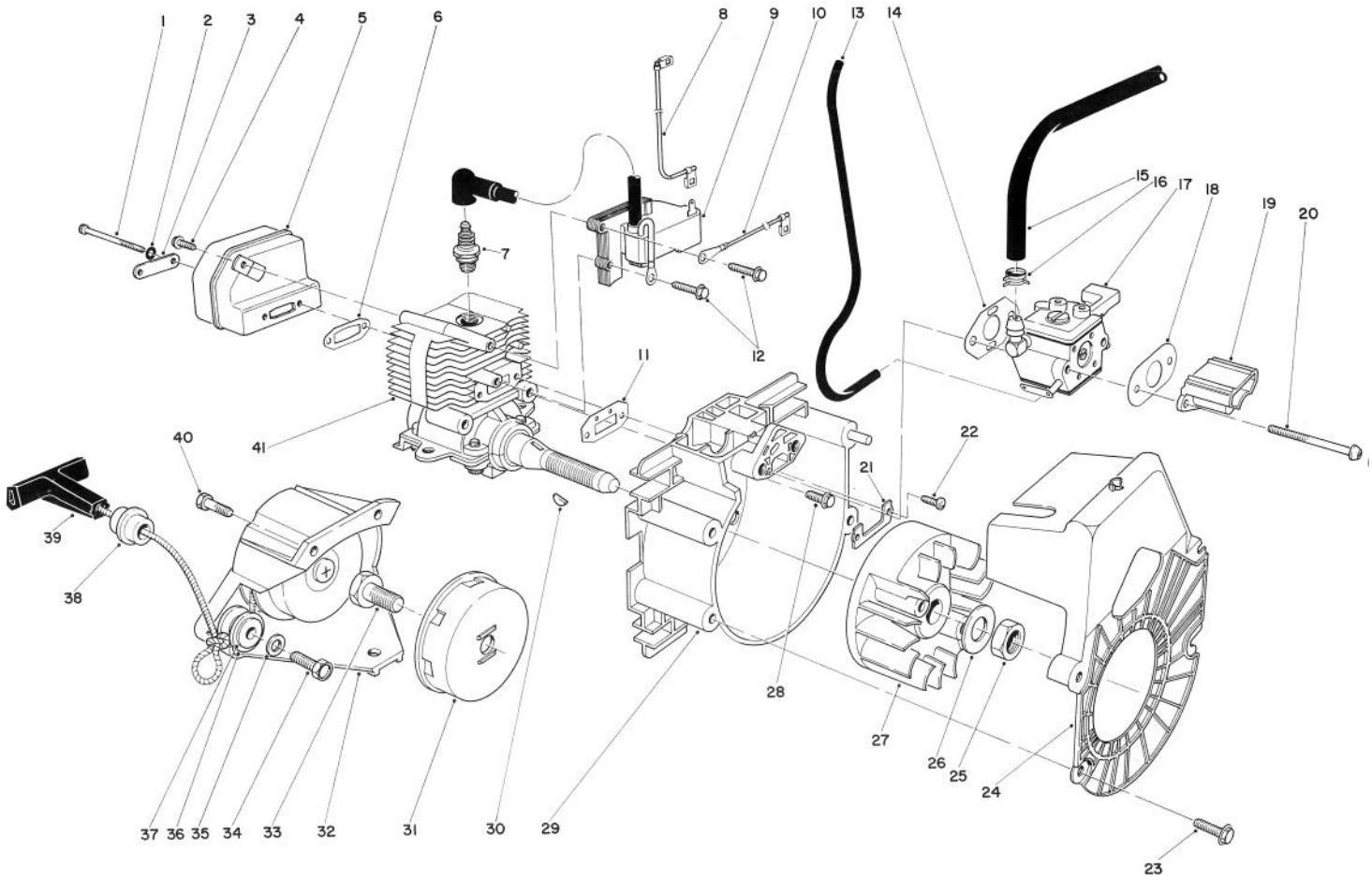

ENGINE ASSEMBLY

Ref. No.	Part No.	Description	No. Used
1	45-2380	Screw, Muffler	2
2	3253-17	Lockwasher	2
3	45-0410	Stress Plate, Muffler	1
4	45-2370	Screw, Muffler Tab	1
5	45-2510	Muffler Assembly	1
6	45-1950	Gasket, Exhaust	1
7	45-2860	Spark Plug	1
8	45-2340	Wire Assembly – Coil	1
9	45-2290	C D I Module, Speed Limiting	1
10	45-2330	Wire Assembly – Ground	1
11	45-1960	Gasket, Intake	1
12	45-0640	Screw, C D I Mount	2
13	44-3170	Hose, Primer	1
14	45-1790	Gasket, Carburetor	1
15	44-2910	Hose Fuel	1
16	2412-80	Clamp, Fuel Line	2
17	45-2360	Carburetor	1
18	45-2350	Gasket, Choke/Spitback Cup	1
19	45-2260	Spit Back Cup	1
20	45-2400	Screw, Carburetor	2
21	45-0540	Plate, Stress	1
22	45-2140	Screw, Intake	2

Ref. No.	Part No.	Description	No. Used
23	45-0630	Screw, Shroud	3
24	45-1851	Cooling Shroud	1
25	3220-5	Nut, Flywheel	1
26	45-2280	Washer, Flywheel	1
27	45-1670	Flywheel	1
28	45-0710	Screw, Backing Plate	3
29	45-2021	Backing Plate Assembly	1
30	45-0470	Key, Flywheel	1
31	45-2150	Cup, Starter	1
32	45-1480	Starter Assembly (Incl. Ref. #34-39)	1
33	45-2320	Screw, Starter Cup	1
34	45-2820	Screw, Idler Pulley	1
35	45-2830	Washer, Brake	1
36	45-2840	Idler Pulley (Incl. Ref. #37)	1
37		Bushing	1
38	44-2850	Guide, Rope	1
39	38-6570	Handle	1
40	45-0710	Screw, Starter Assembly	3
41	45-2270	Short Block	1
*	221-710	Engine Complete	1
*	45-2110	Insert, Threaded	2

*Not Illustrated

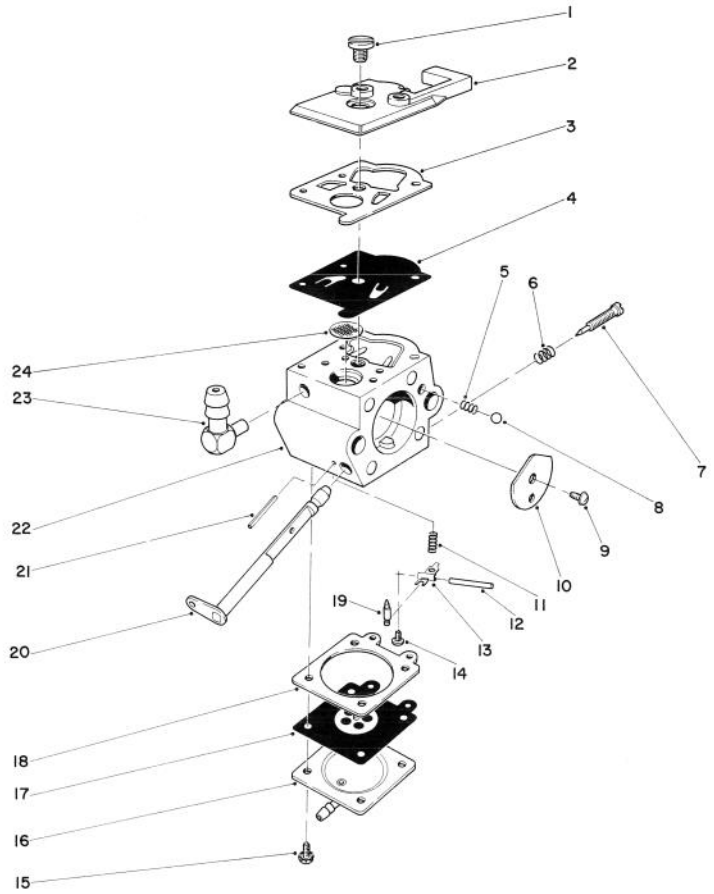

CARBURETOR ASSEMBLY NO. 45-2360

Ref. No.	Part No.	Description	No. Used
1	45-2650	Pump Cover Screw	1
2	45-2660	Pump Cover	1
3	45-2670	Pump Gasket	1
4	45-2680	Pump Diaphragm	1
5	45-2740	Choke Friction Spring	1
6	45-2770	High Speed Needle Adj. Spring	1
7	45-2760	High Speed Needle	1
8	45-2750	Choke Friction Ball	1
9	45-2780	Valve Screw	1
10	45-2790	Choke Valve	1
11	45-2800	Metering Lever Spring	1
12	41-1020	Metering Lever Pin	1

Ref. No.	Part No.	Description	No. Used
13	41-0880	Metering Lever	1
14	41-1030	Metering Lever Pin Screw	1
15	41-1070	Metering Diaphragm Screw	4
16	45-2730	Metering Diaphragm Cover	1
17	41-1050	Metering Diaphragm Assy.	1
18	45-2720	Metering Diaphragm Gasket	1
19	45-2810	Inlet Needle Valve	1
20	45-2710	Choke Shaft Assembly	1
21		Roll Pin	1
22	45-2700	Carburetor Body (Incl. Ref. #21)	1
23	45-2690	Fuel Fitting	1
24	46-4720	Inlet Screen	1

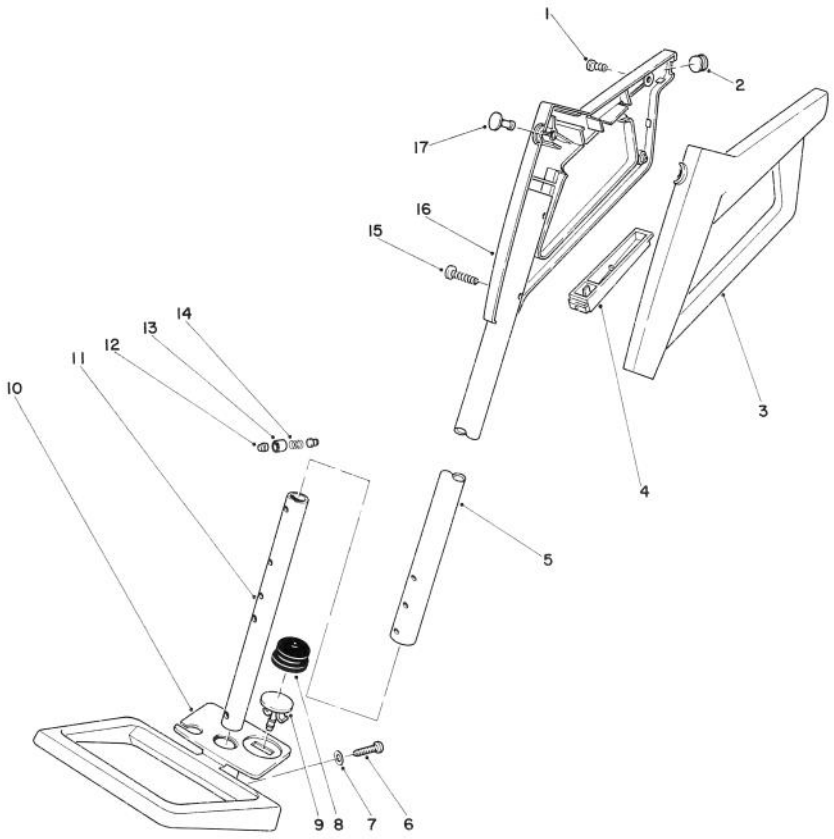

HANDLE ASSEMBLY

Ref. No.	Part No.	Description	No. Used
1	32104-118	Screw Self-Tapping Cross Recess Pan Hd.	2
2	46-5940	Plug – Cord	1
3	42-2840	Grip – Control L.H.	1
4	46-6500	Cover Handle	1
5	44-2980	Tubing – Upper Handle	1
6	32105-5	Screw – Machine Slotted Hex Hd.	2
7	3256-51	Washer – Plain	2
8	44-3100	Bulb – Primer	1
9	44-2750	Body – Primer	1
10	44-3110	Insert Handle Assembly	1
11	44-2970	Tube – Handle, Mounting	1
12	46-6950	Release Handle	2
13	46-7520	Sleeve Release	1
14	46-6960	Spring – Compression	1
15	32104-121	Screw – Self Tapping Cross Recess Pan Hd.	3
16	42-2830	Grip – Control R.H.	1
17	46-6490	Plug Key	1

The Toro Promise

A ONE YEAR LIMITED WARRANTY

The Toro Company promises to repair your TORO Product if defective in materials or workmanship. The following time periods from the date of purchase apply:

Residential Product	1 Year
Residential Products Used Commercially . . .	45 Days

The costs of parts and labor are included, but the customer pays the transportation costs. Just return any residential product to an Authorized TORO Service Dealer or TORO Distributor.

Should you feel your TORO Product is defective and wish to rely on The Toro Promise, the following procedure is recommended:

1. Contact any Authorized TORO Service Dealer, TORO Master Service Dealer, or TORO Distributor (the Yellow Pages of your telephone directory is a good reference source).
2. He will either instruct you to return the product to him or recommend another Authorized TORO Service outlet which might be more convenient.
3. Bring the product along with your original sales slip, or other evidence of purchase date, to the service dealer.
4. The servicing dealer will inspect the unit, advise you whether the product is defective and, if so, make all repairs necessary to correct the defect without extra charge to you.

If for any reason you are dissatisfied with the dealer's analysis of the defect or the service performed, you may contact us.

Write:

TORO Consumer Service Department
8111 Lyndale Avenue South
Minneapolis, Minnesota 55420

The above remedy of product defects through repair by an Authorized TORO Service Dealer is the purchaser's sole remedy for any defect.

THERE IS NO OTHER EXPRESS WARRANTY. ALL IMPLIED WARRANTIES OF MERCHANTABILITY AND FITNESS FOR USE ARE LIMITED TO THE DURATION OF THE EXPRESS WARRANTY.

Some states do not allow limitations on how long an implied warranty lasts, so the above limitation may not apply to you.

This warranty applies only to parts or components which are defective and does not cover repairs necessary due to normal wear, misuse, accidents, or lack of proper maintenance. Regular, routine maintenance of the unit to keep it in proper operating condition is the responsibility of the owner.

All warranty repairs reimbursable under The Toro Promise must be performed by an Authorized TORO Service Dealer using Toro approved replacement parts.

Repairs or attempted repairs by anyone other than an Authorized TORO Service Account are not reimbursable under The Toro Promise. In addition, these unauthorized repair attempts may result in additional malfunctions, the correction of which is not covered by warranty.

THE TORO COMPANY IS NOT LIABLE FOR INDIRECT, INCIDENTAL OR CONSEQUENTIAL DAMAGES IN CONNECTION WITH THE USE OF THE PRODUCT INCLUDING ANY COST OR EXPENSE OF PROVIDING SUBSTITUTE EQUIPMENT OR SERVICE DURING PERIODS OF MALFUNCTION OR NON-USE.

Some states do not allow the exclusion or limitation of incidental or consequential damages, so the above limitation or exclusion may not apply to you.

This warranty gives you specific legal rights, and you may also have other rights which vary from state to state.

COUNTRIES OTHER THAN THE UNITED STATES OR CANADA

Customers who have purchased TORO products exported from the United States or Canada should contact their TORO Distributor (Dealer) to obtain guarantee policies for your country, province or state. If for any reason you are dissatisfied with your Distributor's service or have difficulty obtaining guarantee information, contact the TORO importer. If all other remedies fail, you may contact us at The Toro Company.

Compliance with Radio Interference Regulations Certified.
Certifie Conforme au Reglement sur le Brouillage Radioelectrique.

PRODUCT CHANGES

In an effort to make improvements available to TORO owners as quickly as possible, minor changes are incorporated into Toro's products from time to time that do not become immediately shown in the Parts Catalog. If such a change apparently has been made in your unit, which is not reflected in your manual, see your TORO Distributor or his Authorized TORO Service Dealer for information and part numbers.

IDENTIFICATION AND ORDERING

Model and Serial Numbers

The Gas Power Shovel has two identification numbers: a model number and a serial number. The two numbers are stamped on a decal which is located on left hand side of handle tube. In any correspondence concerning the Gas Power Shovel, supply model and serial numbers to assure that correct information and replacement parts are obtained.

To order replacement parts from an Authorized TORO Service Dealer, supply the following information:

1. Model and serial numbers of the Gas Power Shovel.
2. Part number, description, and quantity of part(s) desired.

Note: Do not order by reference number if a parts catalog is being used, use the PART NUMBER.

Keep Your TORO All Toro Genuine TORO PARTS & ACCESSORIES ***Insist on Genuine Toro Parts***

MAINTENANCE RECORD

MAINTENANCE RECORD

Litho in U.S.A.