Form Number 3329-413

Quiet Collector

Wheel Horse® 260-Series Lawn and Garden Tractors

Model No. 78200 - 230000001 and up.

Parts Catalog

Ordering Replacement Parts

To order replacement parts, please supply: the part number, the quantity, and the description of each part desired.

Understanding Reference Numbers

Each identified part in an illustration has a reference number. The reference number for a part also appears in the parts list, along with other information about the part.

This catalog uses two special reference number formats, one to indicate parts in a service assembly and another to indicate the quantity of a given part in an illustration.

Service Assembly Reference Numbers

Parts in service assemblies have reference numbers in the form **a:b.** The **a** represents the reference number of the entire service assembly and the **b** represents a sequential number unique to each part within the service assembly.

For example, a wheel assembly might be identified by reference number 6, the tire by **6:**1, the valve by **6:**2, and the wheel by **6:**3. When you order the assembly identified by reference number 6, you receive all parts identified by reference numbers 6:1, 6:2, and 6:3. However, you may also order any part individually. Reference numbers of this type appear in illustrations and in part lists.

Reference Numbers Indicating Quantity

In an illustration, if a reference number indicates more than one part, the reference number has the form **nX y.** The **n** represents the quantity of the part, the **X** is the multiplication symbol, and the **y** represents the reference number.

For example, in an illustration, the reference number **2X 37** means that two of the parts identified by reference number 37 are indicated.

©The Toro Company - 2003
All Rights Reserved

Part Description Abbreviations

Part descriptions in this catalog may include the following abbreviations.

AR. . . . . as required
ASM. . . . . assembly
CARR. . . . . carriage
DEG. . . . . degrees
FH. . . . . flat head
GA. . . . . gauge
HF. . . . . hex flange
HH. . . . . hex head
HHF. . . . . hex head flange
HHFTF. . . . . hex head flange thread forming
HJ. . . . . hex jam
HLH. . . . . hex lag head
HOC. . . . . height-of-cut
HS. . . . . hex
HSBH. . . . . hex socket button head
HSFH. . . . . hex socket flat head
HSH. . . . . hex socket head
HWH. . . . . hex washer head
HWHTF. . . . . hex washer head thread forming
HYD. . . . . hydraulic
INC. . . . . incorporated
LH. . . . . left hand
NI. . . . . nylon insert
PPH. . . . . phillips pan head
PTH. . . . . phillips truss head
PTO. . . . . power take off
RH. . . . . right hand
SFH. . . . . slotted fillister head
SHH. . . . . slotted hex head
SHWH. . . . . slotted hex washer head
SPH. . . . . slotted pan head
SQH. . . . . square head
SRH. . . . . slotted round head
STD. . . . . standard
TAP. . . . . self tapping
TTH. . . . . torx truss head

Contents

Description	Page
Hopper Back Assembly	 3
Front Hopper Assembly	 4
Frame and Bottom Hopper Assembly	 5
Scroll Assembly	 6
Baffle and Tube Assembly	 7
Hitch and Pulley Assembly	 8

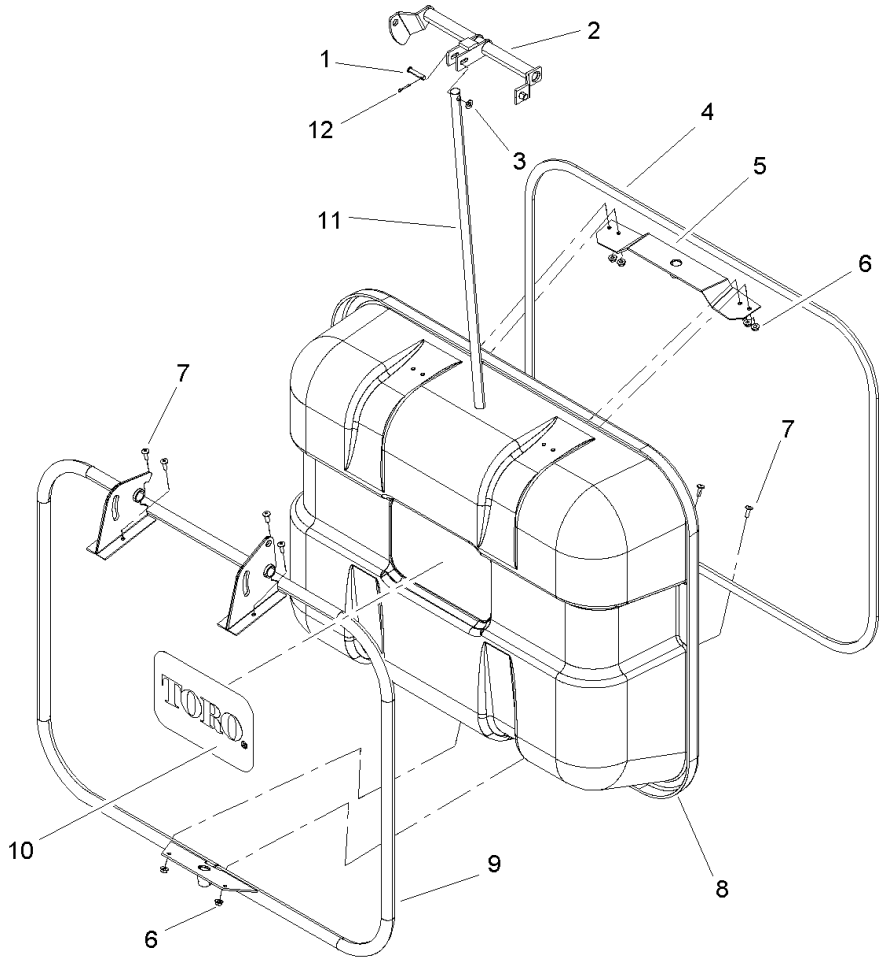

Hopper Back Assembly

Ref	Part No.	Qty.	Description
1	98-3637	1	Pin
2	98-3657	1	Lever
3	3256-23	1	Washer-Flat
4	98-3645	1	Seal-Stripping
5	98-9172	1	Bracket-Guide
6	32128-33	6	Nut-HF
7	9114604	6	Screw-Truss Head
8	98-9170	1	Hopper-Back
9	98-9171	1	Frame
10	67-7310	1	Decal-Toro
11	98-9173	1	Rod-Locking
12	3272-10	1	Pin-Cotter

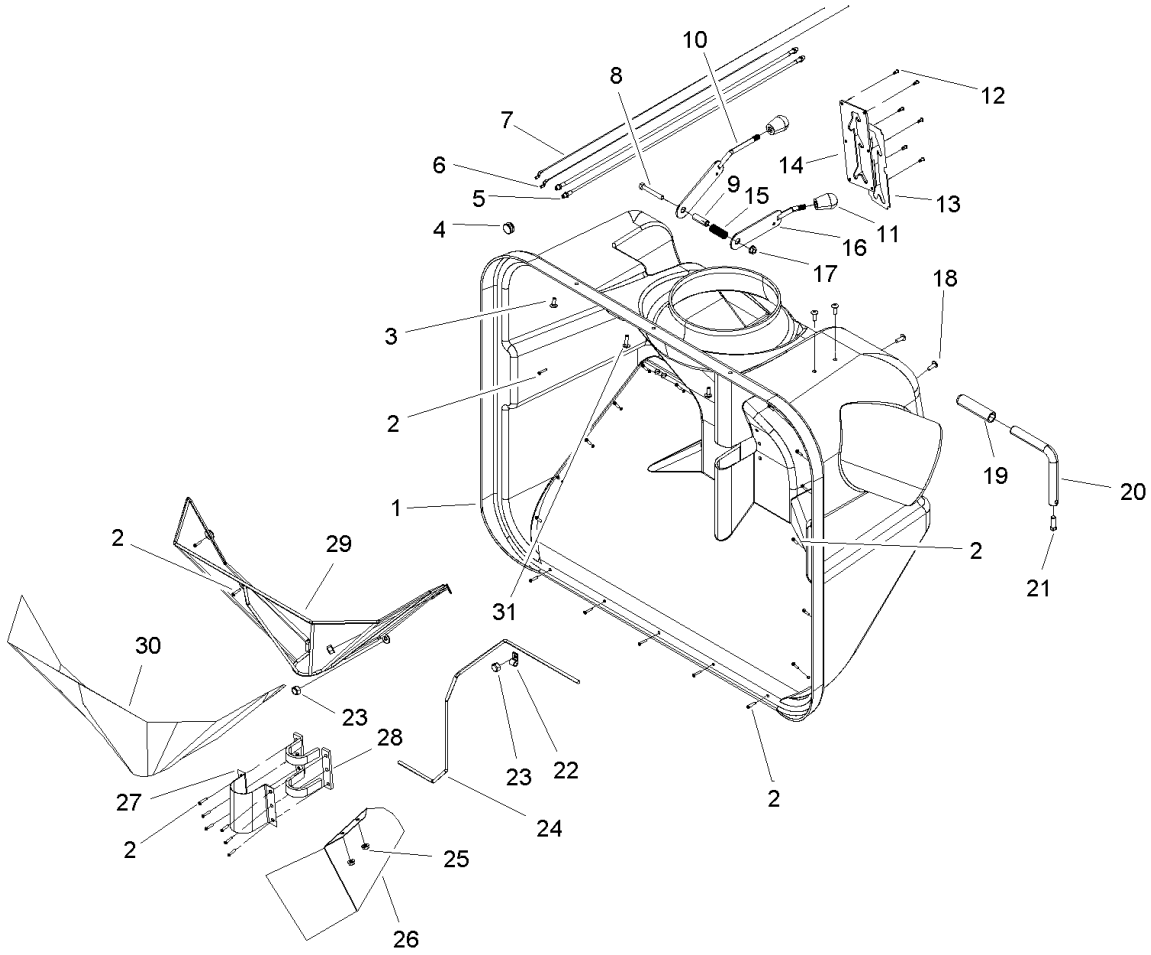

Front Hopper Assembly

Ref	Part No.	Qty.	Description
1	98-3601	1	Hopper-Front
2	32144-23	26	Screw-Metal
3	3229-1	2	Screw-CARR
4	98-3650	1	Cap-Rubber
5	98-3618	2	Shield-Cable
6	98-3620	1	Cable
7	98-9182	1	Cable-Control
8	322-11	1	Screw-HH
9	98-3648	1	Sleeve
10	98-9177	1	Lever-Clutch
11	98-3672	2	Knob-Oval
12	92-9665	6	Screw
13	106-2654	1	Decal-Operation
14	106-3460	1	Plate-Lever
15	98-3647	1	Spring
16	98-9176	1	Lever-Air Control
17	32128-20	1	Nut-HF
18	9114604	4	Screw-Truss Head
19	98-3662	1	Grip-Handle
20	98-9185	1	Arm-Fill Gauge
21	3243-5	1	Screw-Set
22	98-9144	1	Clip-Cable, Nylon
23	3296-8	3	Nut-Lock, NI
24	98-9190	1	Rod-Fill Gauge
25	32128-33	2	Nut-HF

Ref	Part No.	Qty.	Description
26	98-9186	1	Baffle-Grass
27	98-9164	1	Cover-Bearing
28	98-9151	1	Seal-Stripping
29	98-9178	1	Frame-Filter
30	98-9181	1	Filter
31	3229-2	1	Screw-CARR

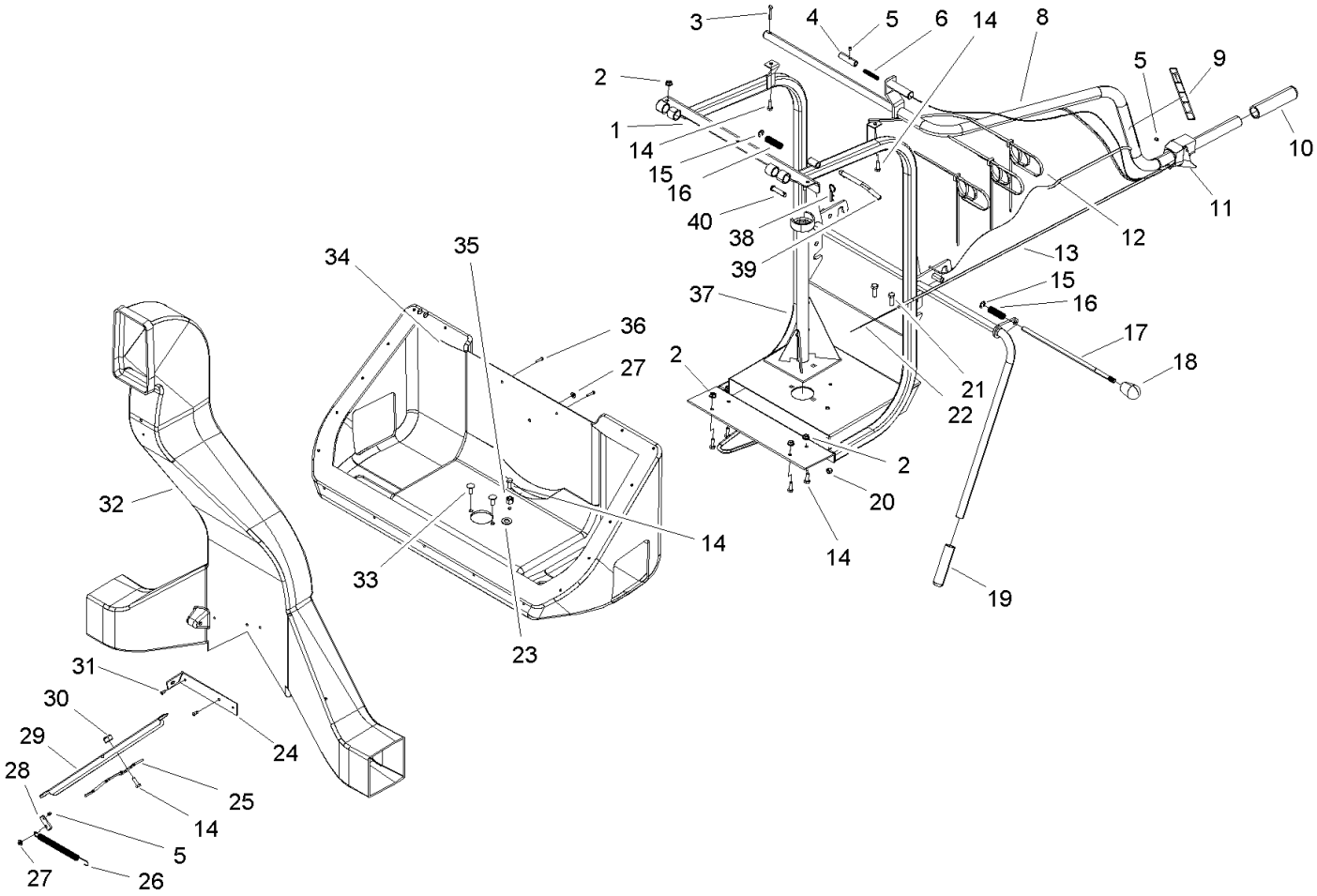

Frame and Bottom Hopper Assembly

Ref	Part No.	Qty.	Description
1	98-3651	1	Frame
2	32128-33	6	Nut-HF
3	3272-21	1	Pin-Cotter
4	98-3665	1	Pin-Lock
5	3245-1	3	Screw-Set, HSH
6	98-3627	1	Spring
8	98-3646	1	Arm-Dump
9	98-3679	1	Decal-Dump Arm Operation
10	98-3669	1	Grip-Handle
11	98-3622	1	Lever-Control
12	3290-378	3	Tie-Cable
13	98-3619	1	Shield-Cable
14	321-4	8	Screw-HH
15	98-3659	2	Ring-Retainer
16	98-3640	2	Spring
17	98-3668	1	Pin-Hitch
18	98-3672	1	Knob-Oval
19	98-3662	1	Grip-Handle
20	3296-42	1	Nut-Lock, NI
21	322-5	2	Screw-HH
22	98-3621	1	Cable
23	3256-25	1	Washer-Flat
24	98-3694	1	Bracket-Reinforcing
25	98-3644	1	Lever-Door
26	98-3642	1	Spring

Ref	Part No.	Qty.	Description
27	98-3652	2	Washer-Cap
28	98-3681	1	End-Cable
29	98-9175	1	Door-Air
30	3296-19	1	Nut-Lock NI
31	92-9665	2	Screw
32	98-3605	1	Dock-Air
33	3230-23	2	Screw-CARR
34	98-3602	1	Hopper-Bottom
35	3296-39	1	Nut-Lock, NI
36	32144-23	2	Screw-Metal
37	98-9139	1	Support-Shaft
38	98-3696	1	Hairpin
39	98-3613	1	Hook
40	98-3695	1	Pin-Hitch

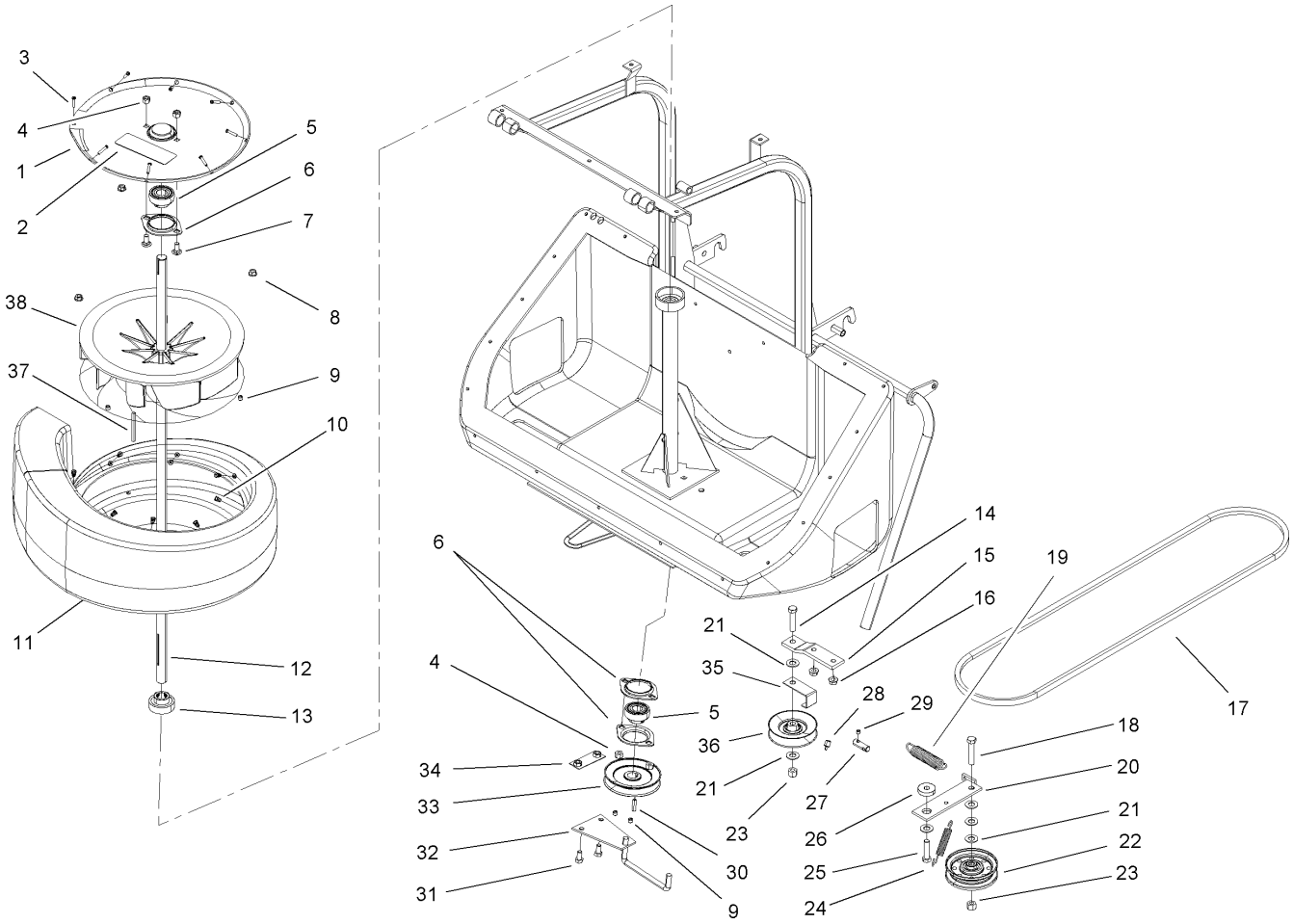

Scroll Assembly

Ref	Part No.	Qty.	Description
1	98-3604	1	Cover-Scroll
2	106-4156	1	Decal-Hazard, Add Weight
3	3250-17	8	Screw-PPH
4	3296-29	4	Nut-Lock, NI
5	98-3690	2	Bearing
6	98-3691	3	Flange
7	3230-1	2	Bolt-CARR
8	32128-33	2	Nut-HF
9	3246-2	2	Screw-Set, HSH
10	98-9145	8	Nut-Insert
11	98-9146	1	Scroll
12	98-9141	1	Shaft
13	98-9150	1	Bearing
14	323-9	1	Screw-HH
15	106-3450	1	Bracket
16	32128-20	2	Nut-HF
17	106-3453	1	Belt-V
18	323-10	1	Screw-HH
19	98-9195	1	Spring-Extension
20	98-9196	1	Arm-Idler
21	3256-25	6	Washer-Flat
22	98-9135	1	Idler-Flat
23	3296-39	2	Nut-Lock, NI
24	98-9197	1	Spring-Extension
25	323-8	1	Screw-HH

Ref	Part No.	Qty.	Description
26	98-3632	1	Washer-Flange
27	98-3681	1	End-Cable
28	98-9194	1	Grommet-Cable
29	3245-1	1	Screw-Set, HSH
30	98-3692	1	Key
31	322-2	2	Screw-HH
32	106-3452	1	Guide-Belt
33	98-3623	1	Pulley-V
34	106-3451	1	Plate-Mounting
35	98-9199	1	Guide-Belt
36	98-9198	1	Pulley-V
37	98-3628	1	Key
38	98-9140	1	Fan

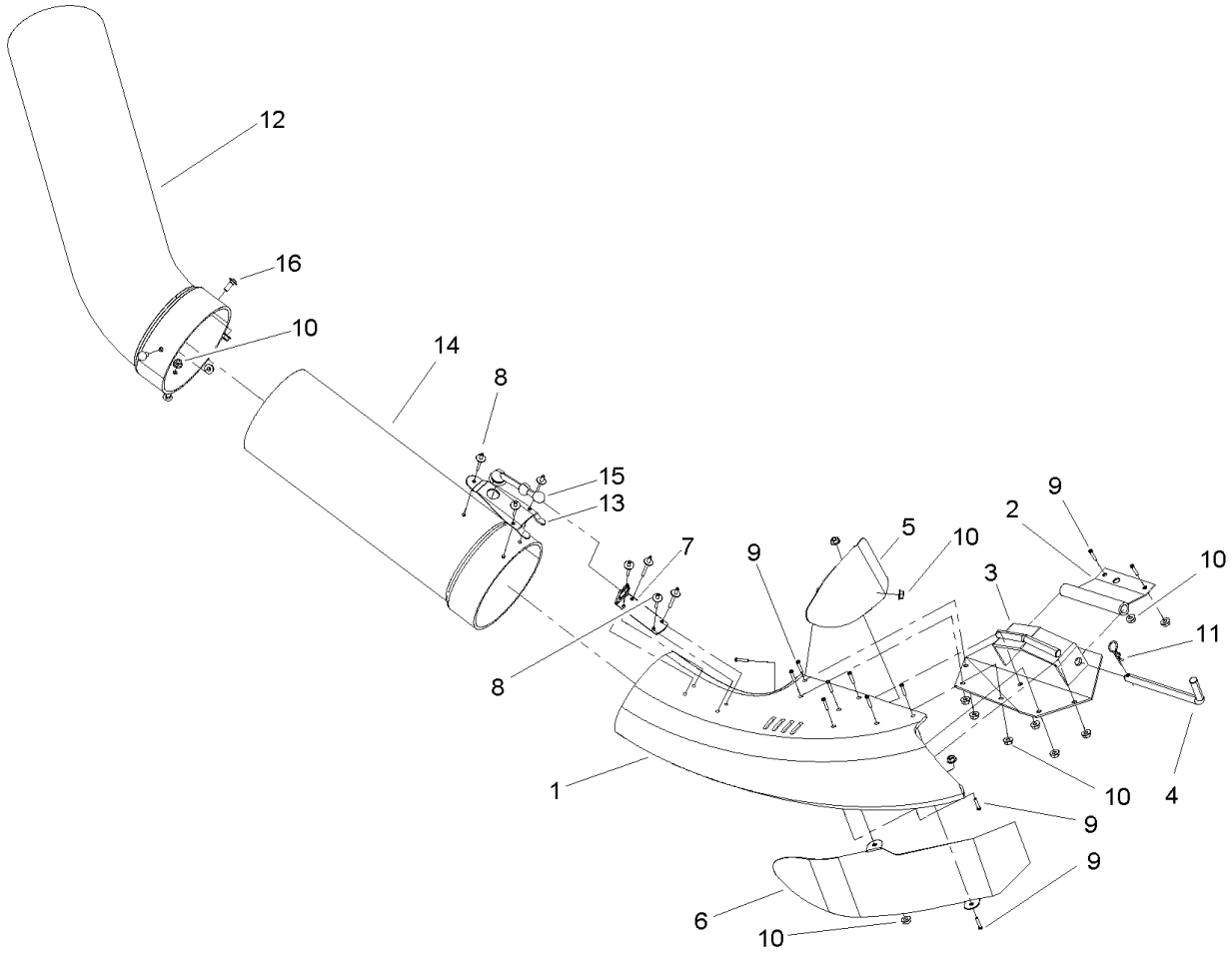

Baffle and Tube Assembly

Ref	Part No.	Qty.	Description
1	98-9131	1	Boot
2	98-9163	1	Bracket-Deck
3	98-9138	1	Bracket-Boot
4	98-9126	1	Pin-Boot
5	98-9127	1	Baffle
6	98-9132	1	Baffle
7	98-3676	1	Bracket-Latch
8	3269-21	7	Rivet-Pop
9	32122-42	12	Screw
10	32128-33	15	Nut-HF
11	98-3696	1	Hairpin
12	106-3456	1	Tube-Elbow
13	98-3675	1	Bracket
14	106-3457	1	Tube-Straight
15	98-3693	1	Latch-Rubber
16	3229-1	3	Screw-CARR

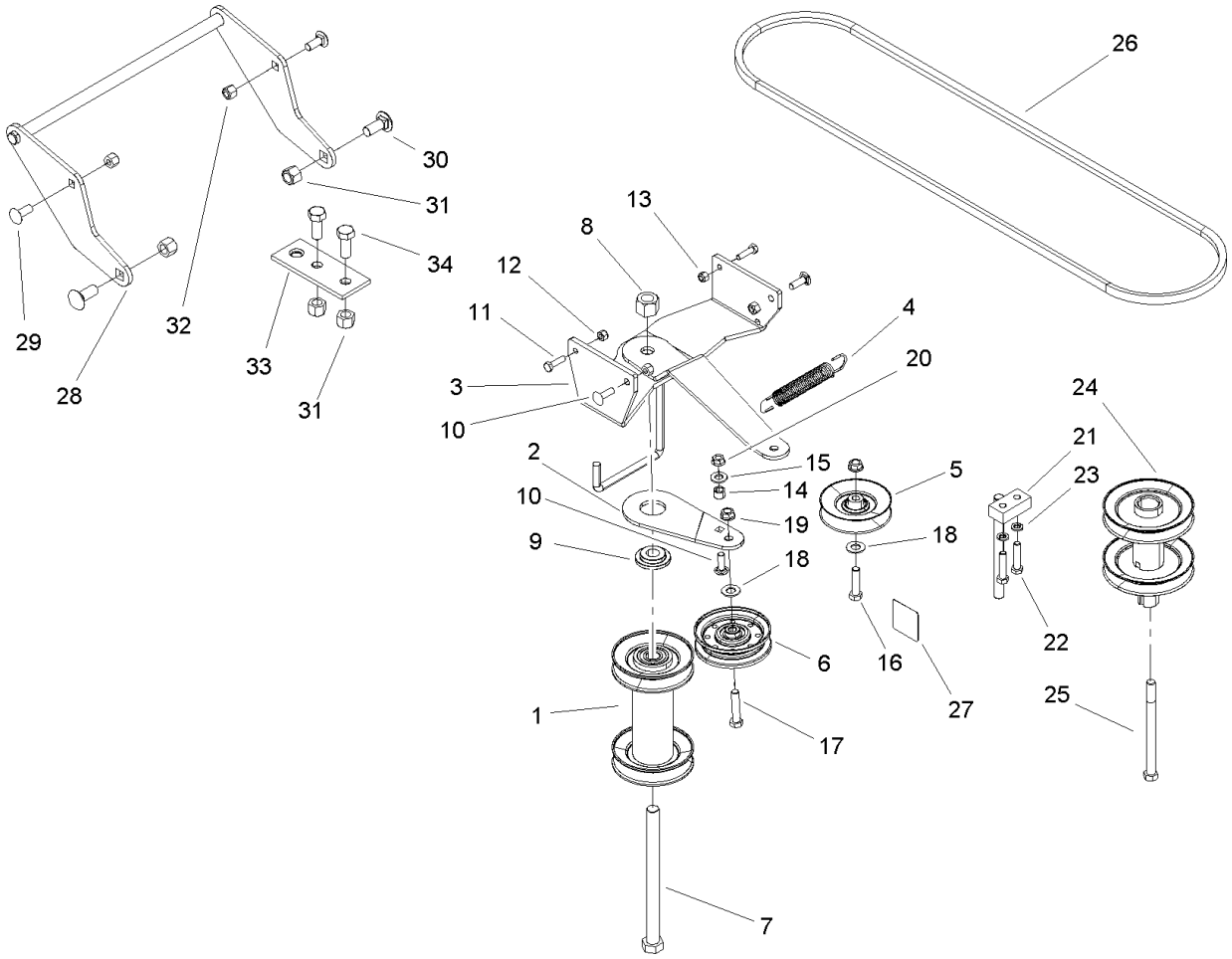

Hitch and Pulley Assembly

Ref	Part No.	Qty.	Description
1	98-9179	1	Pulley-Double
2	98-9189	1	Arm-Idler
3	98-9191	1	Frame-Drive
4	98-3636	1	Spring
5	98-9198	1	Pulley-V
6	98-9135	1	Idler-Flat
7	327-27	1	Screw-HH
8	3296-53	1	Nut-Lock, NI
9	98-9161	1	Washer-Flange
10	3230-22	3	Screw-CARR
11	321-6	2	Screw-HH
12	3296-29	2	Nut-Lock, NI
13	3296-42	2	Nut-Lock, NI
14	98-9162	1	Sleeve
15	3256-24	1	Washer-Flat
16	323-8	1	Screw-HH
17	323-9	1	Screw-HH
18	3256-25	2	Washer-Flat
19	3290-357	2	Nut-HHF
20	32128-20	1	Nut-HF
21	98-9192	1	Shim
22	322-7	2	Screw-HH
23	3253-4	2	Washer-Lock
24	98-9183	1	Pulley-Engine
25	3212-26	1	Screw-HH

Ref	Part No.	Qty.	Description
26	98-9193	1	Belt-V
27	106-2655	1	Decal-Hazard, Pinched Finger
28	98-9188	1	Hitch-Quick, Tractor
29	3231-2	2	Screw-CARR
30	3233-1	2	Screw-CARR
31	3296-23	4	Nut-Lock, NI
32	3296-39	2	Nut-Lock, NI
33	98-9187	1	Plate-Hitch
34	325-5	2	Screw-HH

NOTES

NOTES

NOTES


TORO®