Form No. 3419-162 Rev C

55cm Recycler® Lawn Mower

Model No. 20960—Serial No. 402100000 and Up

Operator's Manual

Introduction

This rotary-blade, walk-behind lawn mower is intended to be used by residential homeowners. It is designed primarily for cutting grass on well-maintained lawns on residential properties. It is not designed for cutting brush or for agricultural uses.

Read this information carefully to learn how to operate and maintain your product properly and to avoid injury and product damage. You are responsible for operating the product properly and safely.

You may contact Toro directly at www.Toro.com for product and accessory information, help finding a dealer, or to register your product.

Whenever you need service, genuine Toro parts, or additional information, contact an Authorized Service Dealer or Toro Customer Service and have the model and serial numbers of your product ready. Figure 1 identifies the location of the model and serial numbers on the product. Write the numbers in the space provided.

Important: **With your mobile device, you can scan the QR code on the serial number decal (if equipped) to access warranty, parts, and other product information**

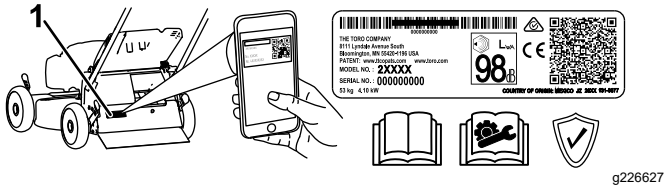

g226627

Figure 1

1. Model and serial number plate

Model No. _____

Serial No. _____

This manual identifies potential hazards and has safety messages identified by the safety-alert symbol (Figure 2), which signals a hazard that may cause serious injury or death if you do not follow the recommended precautions.



g000502

Figure 2

Safety-alert symbol

This manual uses 2 words to highlight information. **Important** calls attention to special mechanical information and **Note** emphasizes general information worthy of special attention.

This product complies with all relevant European directives; for details, please see the separate product specific Declaration of Conformity (DOC) sheet.

Gross or Net Torque: The gross or net torque of this engine was laboratory rated by the engine manufacturer in accordance with the Society of Automotive Engineers (SAE) J1940 or J2723. As configured to meet safety, emission, and operating requirements, the actual engine torque on this class of mower will be significantly lower. Please refer to the engine manufacturer's information included with the machine.

Do not tamper with or disable safety devices on the machine, and check their proper operation regularly. Do not attempt to adjust or tamper with the engine speed control; doing so may create an unsafe operating condition, resulting in personal injury.

© 2024—The Toro® Company
8111 Lyndale Avenue South
Bloomington, MN 55420

Register at www.Toro.com.

Original Instructions (EN)
Printed in Mexico
All Rights Reserved

3419-162

Contents

Introduction 1
Safety 2
General Safety 2
Safety and Instructional Decals 3
Setup 5
1 Assembling and Unfolding the Handle 5
2 Installing the Recoil-Starter Rope in the Rope Guide 6
3 Filling the Engine with Oil 7
4 Assembling the Grass Bag 7
Product Overview 8
Specifications 8
Attachments/Accessories 8
Operation 9
Before Operation 9
Before Operation Safety 9
Filling the Fuel Tank 9
Checking the Engine-Oil Level 10
Adjusting the Cutting Height 11
During Operation 12
During Operation Safety 12
Starting the Engine 12
Using the Self-Propel Drive 13
Using the Traction-Assist Handle 13
Shutting Off the Engine 14
Recycling the Clippings 14
Bagging the Clippings 14
Operating the Bag-on-Demand Lever 15
Side-Discharging the Clippings 15
Operating Tips 16
After Operation 17
After Operation Safety 17
Cleaning under the Machine 17
Folding the Handle 18
Maintenance 19
Recommended Maintenance Schedule(s) 19
Maintenance Safety 19
Preparing for Maintenance 19
Servicing the Air Filter 20
Changing the Engine Oil 20
Replacing the Blade 21
Adjusting the Self-Propel Drive 22
Storage 23
Preparing the Machine for Storage 23
Removing the Machine from Storage 23

Safety

This machine has been designed in accordance with EN ISO 5395:2013.

General Safety

This product is capable of amputating hands and feet and of throwing objects. Always follow all safety instructions to avoid serious personal injury.

Using this product for purposes other than its intended use could prove dangerous to you and bystanders.

- Read, understand, and follow the instructions and warnings in this *Operator's Manual* and on the machine and attachments before starting the engine.
- Use your full attention while operating the machine. Do not engage in any activity that causes distractions; otherwise, injury or property damage may occur.
- Do not put your hands or feet near moving parts of or under the machine. Keep clear of any discharge opening.
- Do not operate the machine without all guards and other safety protective devices in place and working on the machine.
- Keep bystanders and children a safe distance away from the machine. Do not allow children to operate the machine. Allow only people who are responsible, trained, familiar with the instructions, and physically capable to operate the machine.
- Stop the machine, shut off the engine, remove the electric-start key (if equipped), and wait for all moving parts to stop before servicing, fueling, or unclogging the machine.

Improperly using or maintaining this machine can result in injury. To reduce the potential for injury, comply with these safety instructions and always pay attention to the safety-alert symbol, which means Caution, Warning, or Danger—personal safety instruction. Failure to comply with these instructions may result in personal injury or death.

You can find additional safety information where needed throughout this manual.

Safety and Instructional Decals

Safety decals and instructions are easily visible to the operator and are located near any area of potential danger. Replace any decal that is damaged or missing.

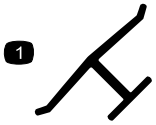

decaloemmarkt

Manufacturer's Mark

1. This mark indicates that the blade is identified as a part from the original machine manufacturer.

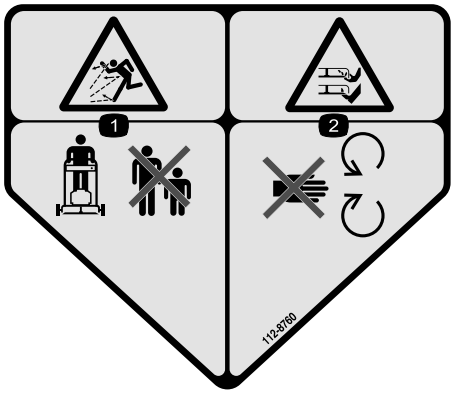

decal112-8760

112-8760

1. Thrown object hazard—keep bystanders a safe distance away from the machine.
2. Cutting/dismemberment of hand or foot—stay away from moving parts.

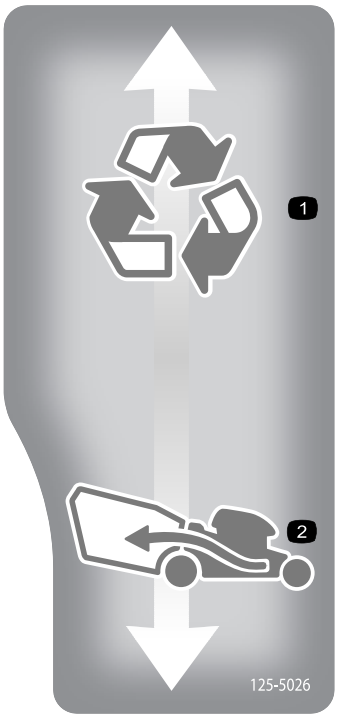

decal125-5026

125-5026

1. Recycling mode
2. Bagging mode

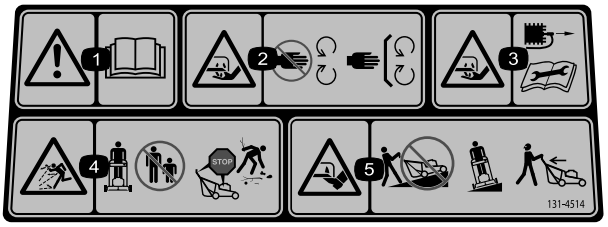

decal131-4514

131-4514

1. Warning—read the *Operator's Manual*.
2. Cutting/dismemberment hazard of hand, mower blade—stay away from moving parts; keep all guards and shields in place.
3. Cutting/dismemberment hazard of hand, mower blade—disconnect the spark-plug wire and read the instructions before servicing or performing maintenance.
4. Thrown object hazard—keep bystanders a safe distance away from the machine; shut off the engine before leaving the operating position; pick up any debris before mowing.
5. Cutting/dismemberment hazard of hand, mower blade—do not operate up and down slopes; operate side to side on slopes; look behind you when backing up.

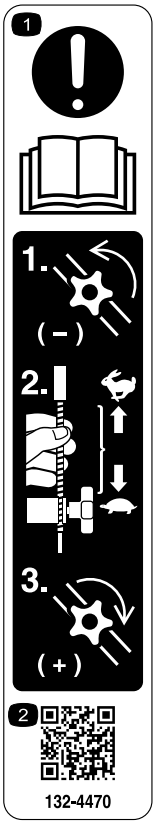

decal132-4470

132-4470

Traction Adjustment

1. Attention; read the *Operator's Manual*—1) Loosen the knob by turning it counterclockwise; 2) Pull the cable(s) away from the engine to decrease the traction, or push the cable(s) toward the engine to increase the traction; 3) Tighten the knob by turning it clockwise.
2. Scan the QR code for more information on traction adjustment.

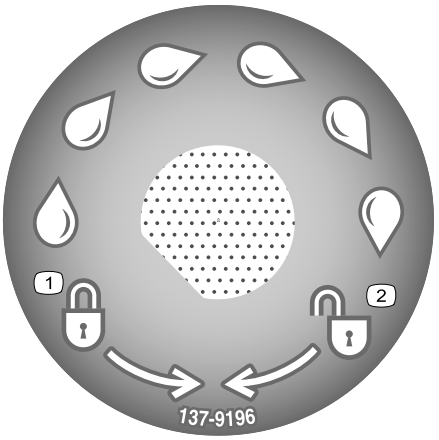

decal137-9196

137-9196

1. Lock
2. Unlock

Setup

Important: **Remove and discard the protective plastic sheet that covers the engine and any other plastic or wrapping on the machine.**

1

Assembling and Unfolding the Handle

No Parts Required

Procedure

Note: Ensure that the cables are routed on the outside of the handle and are not pinched (D of Figure 3).

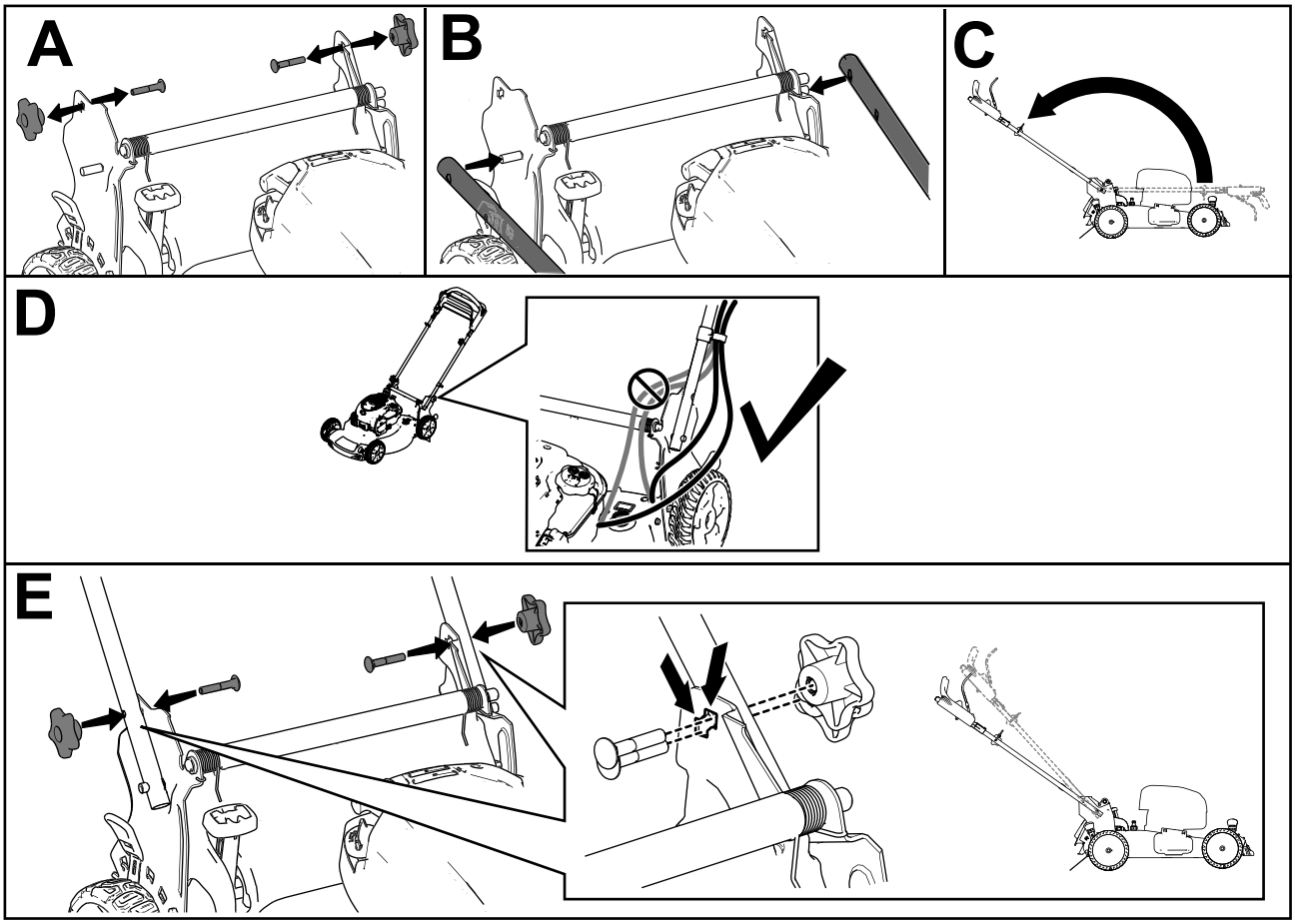

g236451

Figure 3

2

Installing the Recoil-Starter Rope in the Rope Guide

No Parts Required

Procedure

Important: **To start the engine safely and easily whenever you use the machine, install the recoil-starter rope in the rope guide.**

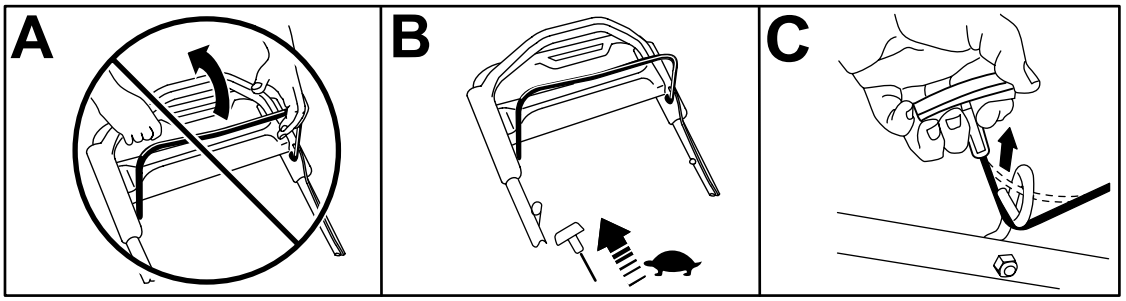

g236533

Figure 4

3

Filling the Engine with Oil

No Parts Required

Procedure

Important: **Your machine does not come with oil in the engine. Before starting the engine, fill the engine with oil.**

Engine oil capacity: 0.47 L (16 oz)

Oil viscosity: SAE 30 or SAE 10W-30 detergent oil

API service classification: SJ or higher

1. Move the machine to a level surface.
2. Remove the dipstick by rotating the cap counterclockwise and pulling it out (Figure 5).

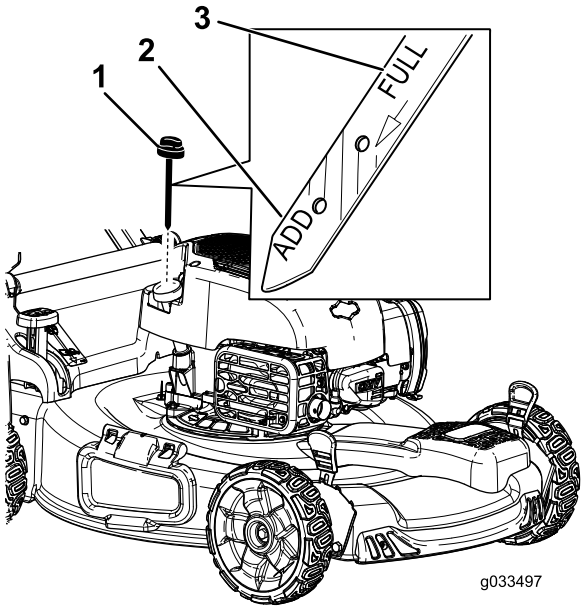

g033497

Figure 5

1. Dipstick
2. Add
3. Full

3. Carefully pour about 3/4 of the engine capacity of oil into the oil-fill tube.
4. Wipe the dipstick clean with a clean cloth.

   Note: Wait 3 to 5 minutes for the oil to settle before checking it.
5. Insert the dipstick into the oil-fill tube, then remove the dipstick.
6. Read the oil level on the dipstick (Figure 5).
   - If the oil level is below the Add mark on the dipstick, carefully pour a small amount of oil into the oil-fill tube, wait 3 minutes, and repeat steps 3 through 5 until the oil level is at the Full mark on the dipstick.
   - If the oil level is above the Full mark on the dipstick, drain the excess oil until the oil level is at the Full mark on the dipstick; refer to Changing the Engine Oil (page 20).

     Important: **If the oil level in the engine is too low or too high and you run the engine, you may damage the engine.**
7. Install the dipstick securely.

4

Assembling the Grass Bag

No Parts Required

Procedure

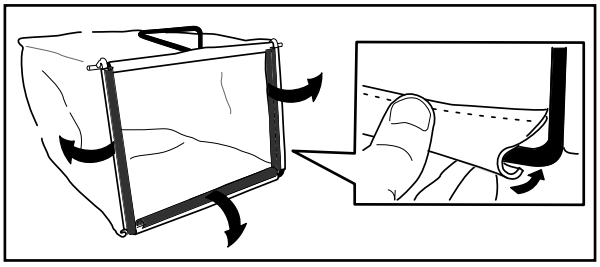

g230447

Figure 6

Product Overview

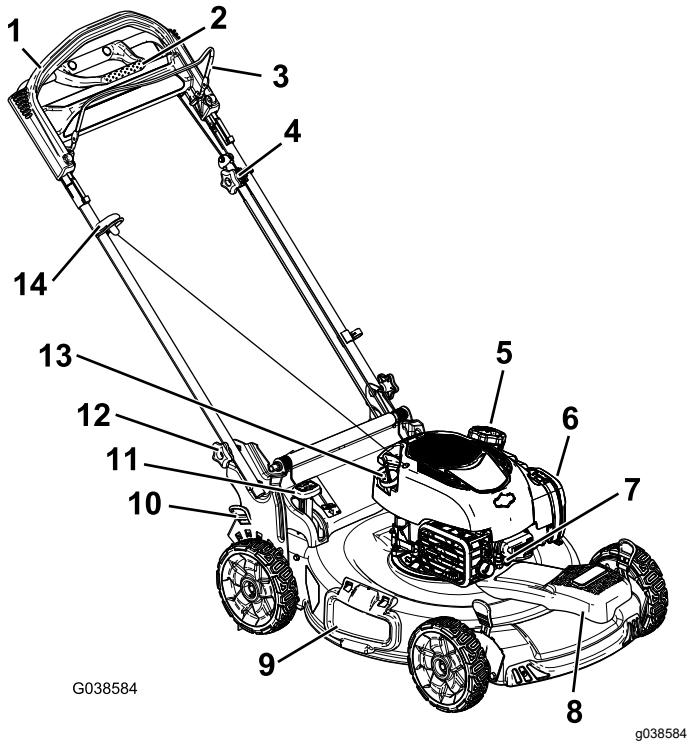

Figure 7

1. Handle
2. Traction-assist handle
3. Blade-control bar
4. Adjustment knob for the self-propel drive
5. Fuel-tank cap
6. Air filter
7. Spark-plug wire
8. Belt cover
9. Side-discharge deflector
10. Cutting-height lever (4)
11. Bag-on-demand lever
12. Handle knob (2)
13. Oil fill/dipstick
14. Recoil-start handle

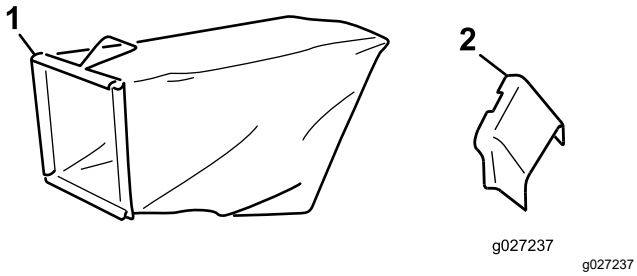

Figure 8

1. Grass bag
2. Side-discharge chute

Specifications

Model	Weight	Length	Width	Height
20960	37 kg (81 lb)	150 cm (59 inches)	58 cm (23 inches)	107 cm (42 inches)

Attachments/Accessories

A selection of Toro approved attachments and accessories is available for use with the machine to enhance and expand its capabilities. Contact your Authorized Service Dealer or authorized Toro distributor or go to www.Toro.com for a list of all approved attachments and accessories.

To ensure optimum performance and continued safety certification of the machine, use only genuine Toro replacement parts and accessories. Replacement parts and accessories made by other manufacturers could be dangerous, and such use could void the product warranty.

Operation

Note: Determine the left and right sides of the machine from the normal operating position.

Before Operation

Before Operation Safety

General Safety

- Become familiar with the safe operation of the equipment, operator controls, and safety signs.
- Check that all guards and safety devices, such as deflectors and/or grass catcher, are in place and working properly.
- Always inspect the machine to ensure that the blades, blade bolts, and cutting assembly are not worn or damaged.
- Inspect the area where you will use the machine, and remove all objects that could interfere with the operation of the machine or that the machine could throw.
- Adjusting the cutting height may bring you into contact with the moving blade, causing serious injury.
  - Shut off the engine, remove the ignition key (electric-start model only), and wait for all moving parts to stop.
  - Do not put your fingers under the housing when adjusting the cutting height.

Fuel Safety

- Fuel is extremely flammable and highly explosive. A fire or explosion from fuel can burn you and others and can damage property.
  - To prevent a static charge from igniting the fuel, place the container and/or machine directly on the ground before filling, not in a vehicle or on an object.
  - Fill the fuel tank outdoors, in an open area, when the engine is cold. Wipe up any fuel that spills.
  - Do not handle fuel when smoking or around an open flame or sparks.
  - Do not remove the fuel cap or add fuel to the tank while the engine is running or hot.
  - If you spill fuel, do not attempt to start the engine. Avoid creating a source of ignition until the fuel vapors have dissipated.
  - Store fuel in an approved container and keep it out of the reach of children.
- Fuel is harmful or fatal if swallowed. Long-term exposure to vapors can cause serious injury and illness.
  - Avoid prolonged breathing of vapors.
  - Keep your hands and face away from the nozzle and the fuel-tank opening.
  - Keep fuel away from your eyes and skin.

Filling the Fuel Tank

- For best results, use only clean, fresh, unleaded gasoline with an octane rating of 87 or higher ((R+M)/2 rating method).
- Oxygenated fuel with up to 10% ethanol or 15% MTBE by volume is acceptable.
- **Do not** use ethanol blends of gasoline, such as E15 or E85, with more than 10% ethanol by volume. Performance problems and/or engine damage may result, which may not be covered under warranty.
- **Do not** use gasoline containing methanol.
- **Do not** store fuel either in the fuel tank or in fuel containers over the winter unless fuel stabilizer has been added to the fuel.
- **Do not** add oil to gasoline.

Fill the fuel tank with fresh unleaded regular gasoline from a major name-brand service station (Figure 9).

Important: **To reduce starting problems, add fuel stabilizer to the gasoline all season. Mix the stabilizer with gasoline less than 30 days old.**

Refer to your engine owner's manual for additional information.

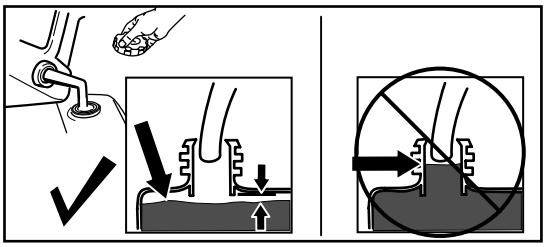

g230458

Figure 9

Checking the Engine-Oil Level

Service Interval: Before each use or daily

Important: **If the oil level in the crankcase is too low or too high and you run the engine, you may damage the engine.**

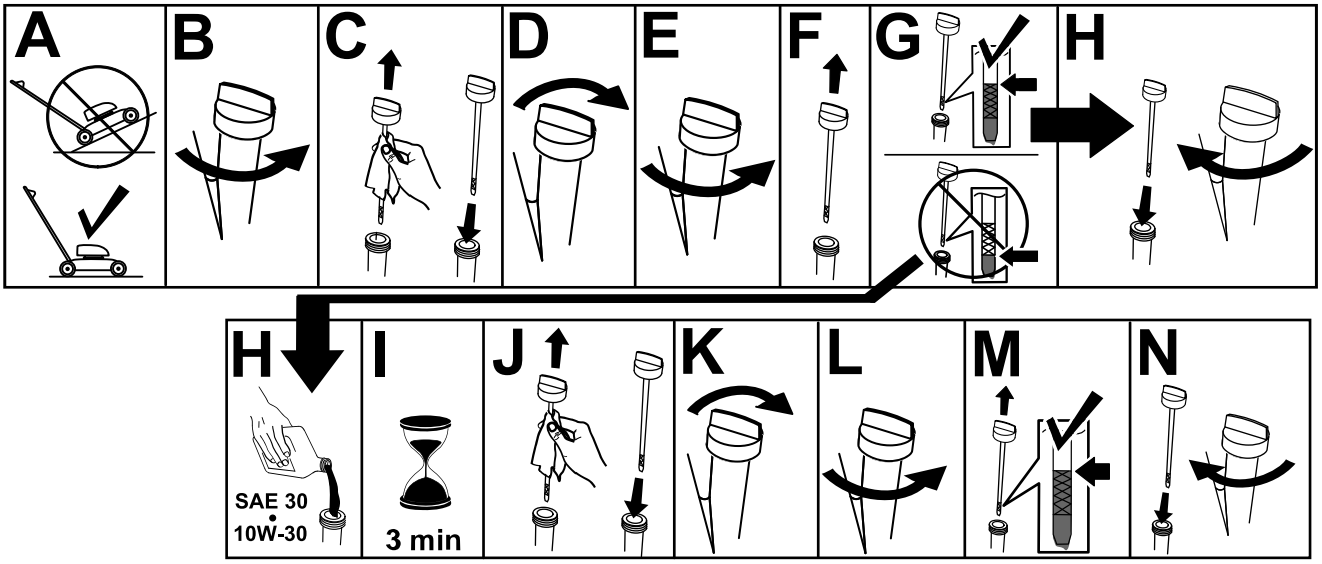

g231765

Figure 10

Adjusting the Cutting Height

⚠ CAUTION

If the engine has been running, the muffler will be hot and can severely burn you.

Keep away from the hot muffler.

Adjust the cutting height as desired. Set all wheels to the same cutting height (Figure 11).

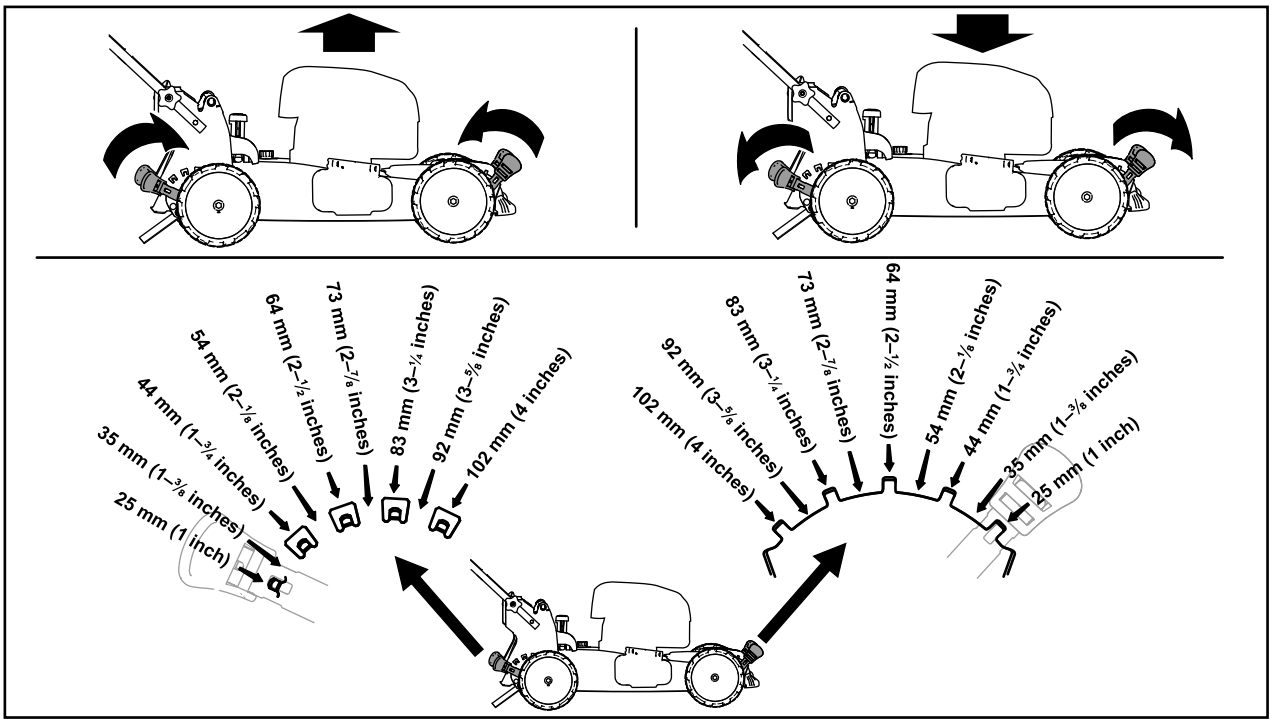

g254131

Figure 11

During Operation

During Operation Safety

General Safety

- Wear appropriate clothing, including eye protection; long pants; substantial, slip-resistant footwear; and hearing protection. Tie back long hair, secure loose clothing, and do not wear loose jewelry.
- Do not operate the machine while ill, tired, or under the influence of alcohol or drugs.
- The blade is sharp; contacting the blade can result in serious personal injury. Shut off the engine, remove the ignition key (electric-start model only), and wait for all moving parts to stop before leaving the operating position.
- When you release the blade-control bar, the engine should shut off and the blade should stop within 3 seconds. If not, stop using your machine immediately and contact an Authorized Service Dealer.
- Keep bystanders, especially small children, out of the operating area. Stop the machine if anyone enters the area.
- Always look down and behind you before moving the machine in reverse.
- Operate the machine only in good visibility and appropriate weather conditions. Do not operate the machine when there is the risk of lighting.
- Wet grass or leaves can cause serious injury if you slip and contact the blade. Avoid mowing in wet conditions.
- Use extreme care when approaching blind corners, shrubs, trees, or other objects that may block your view.
- Watch for holes, ruts, bumps, rocks, or other hidden objects. Uneven terrain could cause the machine to overturn or cause you to lose your balance or footing.
- If the machine strikes an object or starts to vibrate, immediately shut off the engine, remove the key (if equipped), wait for all moving parts to stop, and disconnect the wire from the spark plug before examining the machine for damage. Make all necessary repairs before resuming operation.
- Before leaving the operating position, shut off the engine, remove the ignition key (electric-start model only), and wait for all moving parts to stop.
- If the engine has been running the muffler will be hot and can severely burn you. Keep away from the hot muffler.
- Check the grass catcher components and the discharge chute frequently for any wear or deterioration and replace them with the manufacturer's recommended parts when necessary.
- Use accessories and attachments approved by The Toro® Company only.

Slope Safety

- Mow across the face of slopes; never up and down. Use extreme caution when changing direction on slopes.
- Do not mow on excessively steep slopes. Poor footing could cause a slip-and-fall accident.
- Mow with caution near drop-offs, ditches, or embankments.

Starting the Engine

1. Pull the blade-control bar to the handle and hold it (Figure 12).

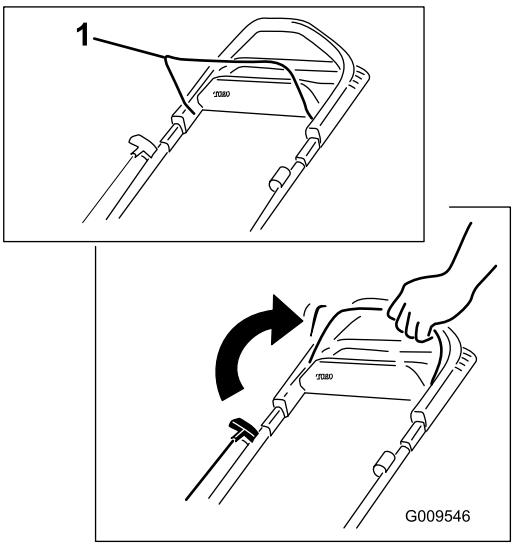

g009546

Figure 12

1. Blade-control bar

2. Pull the recoil-start handle (Figure 13) lightly until you feel resistance, then pull it sharply, and allow it to return to the rope guide on the handle slowly.

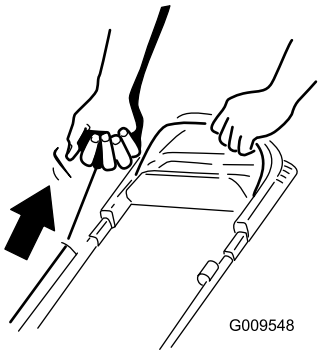

g009548

Figure 13

Note: If the machine does not start after several attempts, contact an Authorized Service Dealer.

Using the Self-Propel Drive

To operate the self-propel drive, simply walk with your hands on the upper handle and your elbows at your sides, and the machine will automatically keep pace with you (Figure 14).

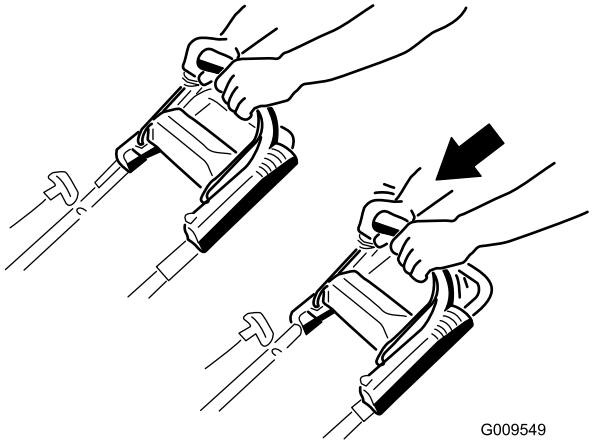

g009549

Figure 14

Note: If the machine does not freely roll backward after self-propelling, stop walking, hold your hands in place, and allow the machine to roll a couple of centimeters (inches) forward to disengage the wheel drive. You can also try reaching just under the upper handle to the metal handle and pushing the machine forward a couple of centimeters (inches). If the machine still does not roll backward easily, contact an Authorized Service Dealer.

Using the Traction-Assist Handle

The traction-assist handle (Figure 15) allows you to use your hands to control the speed of the machine instead of your walking speed. This is helpful for turning tight corners and going up hills, where you want the machine to move but cannot move yourself. It is also useful for mowing at maximum speed.

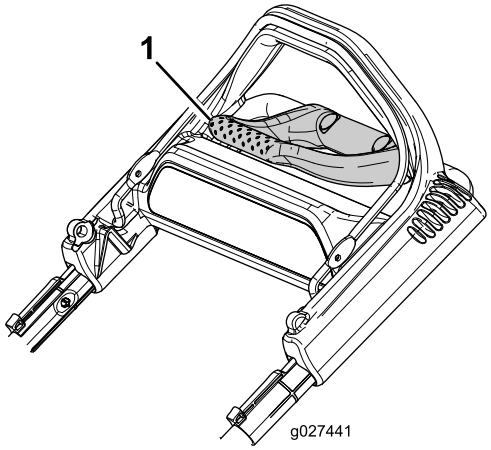

g027441

Figure 15

1. Traction-assist handle

1. Reach forward with your fingertips and grasp the corners of the traction-assist handle (Figure 16).

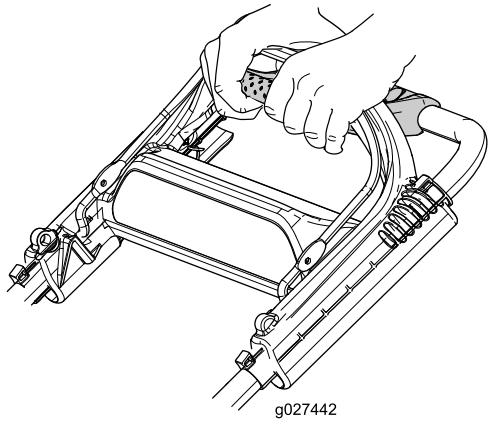

g027442

Figure 16

2. Squeeze the 2 handles together until the machine achieves your desired ground speed.
3. Release the traction-assist handle when you no longer need it.

   Important: **The machine will continue to self-propel until you release the traction-assist handle and stop walking.**

Shutting Off the Engine

Service Interval: Before each use or daily

To shut off the engine, release the blade-control bar.

Important: **When you release the blade-control bar, both the engine and blade should stop within 3 seconds. If they do not stop properly, stop using your machine immediately and contact an Authorized Service Dealer.**

Recycling the Clippings

Your machine comes from the factory ready to recycle the grass and leaf clippings back into the lawn.

If the grass bag is on the machine and the bag-on-demand lever is in the bagging position, move the lever to the recycling position; refer to Operating the Bag-on-Demand Lever (page 15). If the side-discharge chute is on the machine, remove it; refer to Removing the Side-Discharge Chute (page 15).

Bagging the Clippings

Use the grass bag when you want to collect grass and leaf clippings from the lawn.

If the side-discharge chute is on the machine, remove it; refer to Removing the Side-Discharge Chute (page 15). If the bag-on-demand lever is in the recycling position, move it to the bagging position; refer to Operating the Bag-on-Demand Lever (page 15).

Installing the Grass Bag

1. Raise and hold up the rear deflector (Figure 17).

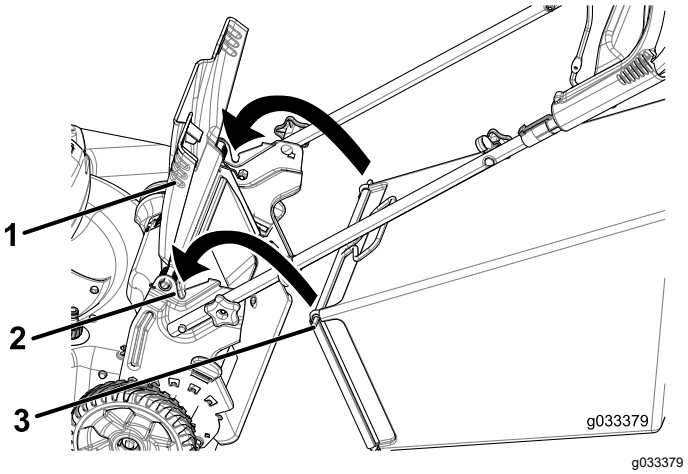

Figure 17

1. Rear deflector
2. Notches (2)
3. Grass-bag pin (2)

2. Install the grass bag, ensuring that the pins on the bag rest in the notches on the handle (Figure 17).
3. Lower the rear deflector.

Removing the Grass Bag

To remove the bag, reverse the steps in Installing the Grass Bag (page 14).

Operating the Bag-on-Demand Lever

The bag-on-demand feature allows you to either collect or recycle grass and leaf clippings while the grass bag is attached to the machine.

- **To bag the grass and leaf clippings**, press the button on the bag-on-demand lever and move the lever forward until the button on the lever pops up (Figure 18).

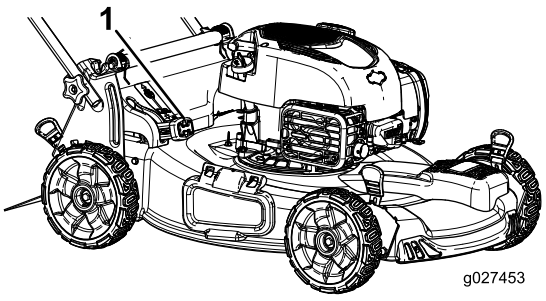

g027453

Figure 18

1. Bag-on-demand lever (in the bagging position)

- **To recycle or side-discharge the grass and leaf clippings**, press the button on the lever and move the lever rearward until the button on the lever pops up.

  Important: **For proper operation, shut off the engine, wait for all moving parts to stop, and then remove any grass clippings and debris from the bag-on-demand door and the surrounding opening (Figure 19) before you move the bag-on-demand lever from 1 position to another.**

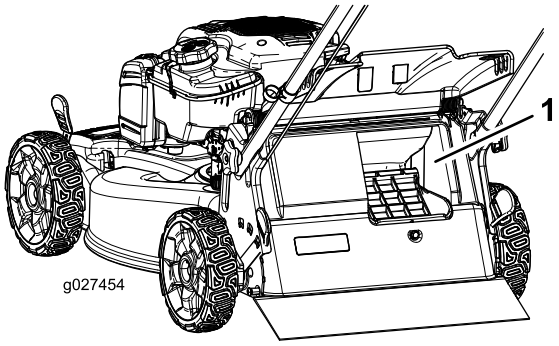

g027454

Figure 19

1. Clean here

Side-Discharging the Clippings

Use side-discharging for cutting very tall grass.

If the grass bag is on the machine and the bag-on-demand lever is in the bagging position, move the lever to the recycling position; refer to Operating the Bag-on-Demand Lever (page 15).

Installing the Side-Discharge Chute

Unlatch and lift up the side deflector and install the side-discharge chute (Figure 20).

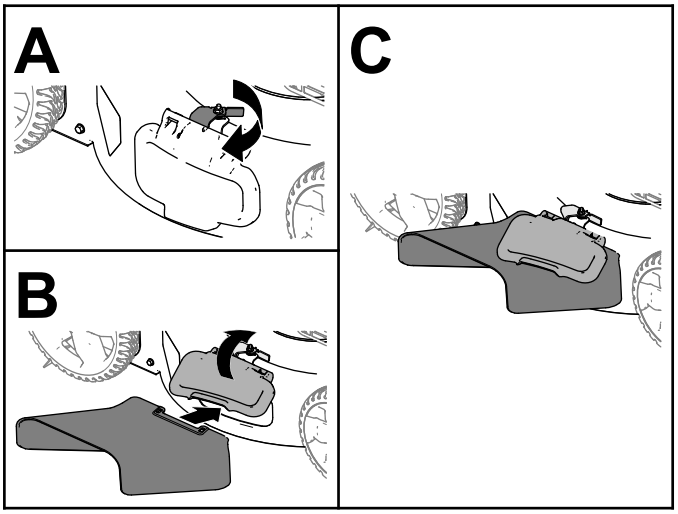

Figure 20

Removing the Side-Discharge Chute

To remove the side-discharge chute, lift up the side deflector, remove the side-discharge chute, and lower the side-discharge deflector until it latches securely.

Operating Tips

General Mowing Tips

- Inspect the area where you will use the machine and remove all objects that the machine could throw.
- Avoid striking solid objects with the blade. Never deliberately mow over any object.
- If the machine strikes an object or starts to vibrate, immediately shut off the engine, remove the key (if equipped), disconnect the wire from the spark plug, and examine the machine for damage.
- For best performance, install a new blade before the cutting season begins.
- Replace the blade when necessary with a Toro replacement blade.

Cutting Grass

- Cut only about a third of the grass blade at a time. Do not cut below 51 mm (2 inches) unless the grass is sparse or it is late fall when grass growth begins to slow down.
- When cutting grass over 15 cm (6 inches) tall, mow at the highest cutting height setting and walk slower; then mow again at a lower setting for the best lawn appearance. If the grass is too long, the machine may plug and cause the engine to stall.
- Wet grass and leaves tend to clump on the yard and can cause the machine to plug or the engine to stall. Avoid mowing in wet conditions.
- Be aware of a potential fire hazard in very dry conditions, follow all local fire warnings, and keep the machine free of dry grass and leaf debris.
- Alternate the mowing direction. This helps disperse the clippings over the lawn for even fertilization.
- If the finished lawn appearance is unsatisfactory, try 1 or more of the following:
  - Replace the blade or have it sharpened.
  - Walk at a slower pace while mowing.
  - Raise the cutting height on your machine.
  - Cut the grass more frequently.
  - Overlap cutting swaths instead of cutting a full swath with each pass.

Cutting Leaves

- After cutting the lawn, ensure that half of the lawn shows through the cut leaf cover. You may need to make more than a single pass over the leaves.
- If there are more than 13 cm (5 inches) of leaves on the lawn, mow at a higher cutting height and then again at the desired cutting height.
- Slow down your mowing speed if the machine does not cut the leaves finely enough.

After Operation

After Operation Safety

General Safety

- Clean grass and debris from the machine to help prevent fires. Clean up oil or fuel spills.
- Allow the engine to cool before storing the machine in any enclosure.
- Never store the machine or fuel container where there is an open flame, spark, or pilot light, such as on a water heater or on other appliances.

Hauling Safety

- Remove the ignition key (if equipped) before loading the machine for hauling.
- Use care when loading or unloading the machine.
- Secure the machine from rolling.

Cleaning under the Machine

Service Interval: Before each use or daily

For best results, clean the machine soon after you have completed mowing.

1. Move the machine onto a flat paved surface.
2. Shut off the engine and wait for all moving parts to stop before leaving the operating position.
3. Lower the machine to its lowest cutting-height setting. Refer to Adjusting the Cutting Height (page 11).
4. Wash out the area under the rear door where the clippings go from the underside of the machine to the grass bag.

   Note: Wash out the area with the bag-on-demand (if equipped) in both the fully forward and fully rearward positions.
5. Attach a garden hose that is connected to a water supply to the washout port (Figure 21).

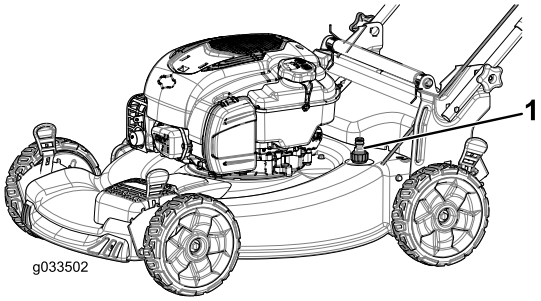

g033502

Figure 21

1. Washout port

6. Turn the water on.
7. Start the engine and run it until the clippings no longer come out from under the machine.
8. Shut off the engine.
9. Shut off the water and disconnect the garden hose from the machine.
10. Start the engine and run it for a few minutes to dry the underside of the machine to prevent it from rusting.
11. Shut off the engine and allow it to cool before storing the machine in an enclosed area.

Folding the Handle

⚠ WARNING

Folding or unfolding the handle improperly can damage the cables, causing an unsafe operating condition.

- **Do not damage the cables when folding or unfolding the handle.**
- **If a cable is damaged, contact an Authorized Service Dealer.**

1. Remove and save the 2 handle knobs and 2 carriage bolts from the handle brackets (Figure 22).

   Important: **Route the cables to the outside of the handle knobs as you fold the handle.**

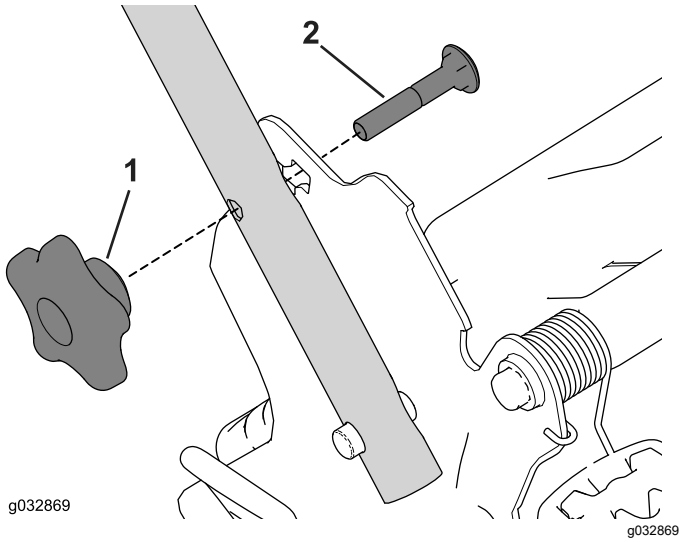

Figure 22

1. Handle knob
2. Carriage bolt

2. Fold the handle by rotating it forward (Figure 23).

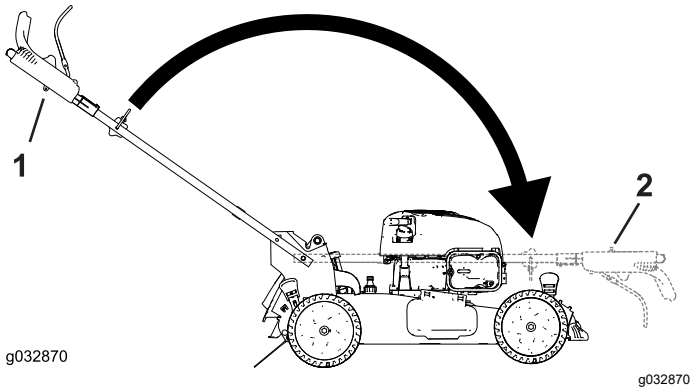

Figure 23

1. Operating position
2. Folded position

3. Insert the carriage bolt (with the bolt head toward the inside) through the handle bracket and the upper hole in the handle end. Ensure that the square edges of each carriage bolt fits into the upper or lower square hole in its related handle bracket (Figure 24).

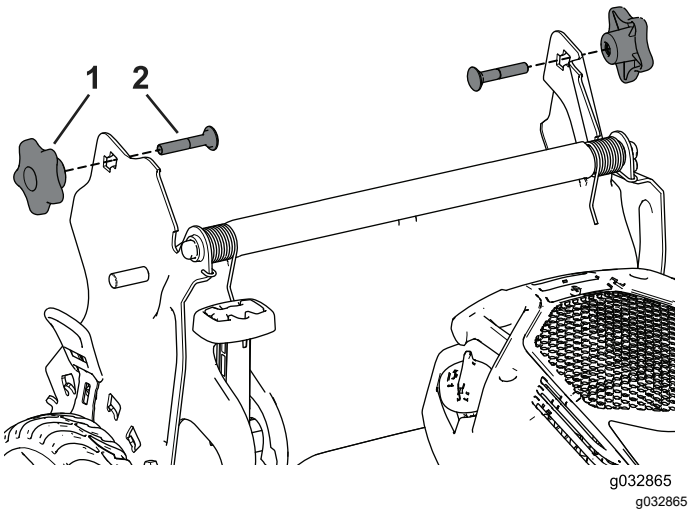

Figure 24

1. Handle knob
2. Carriage bolt

4. Loosely install the handle knobs and carriage bolts on the handle brackets.
5. To unfold the handle, refer to 1 Assembling and Unfolding the Handle (page 5).

Maintenance

Recommended Maintenance Schedule(s)

Maintenance Service Interval	Maintenance Procedure
Before each use or daily	• Check the engine-oil level and add oil as needed. • Ensure that the engine shuts off within 3 seconds after releasing the blade-control bar. • Clean grass clippings and dirt from under the machine.
Every 25 hours	• Service the air filter; service it more frequently in dusty operating conditions.
Yearly	• Replace the air filter; replace it more frequently in dusty operating conditions. • Change the engine oil (if desired). • Replace the blade or have it sharpened (more frequently if the edge dulls quickly). • Clean the engine by removing dirt and debris from its top and sides; clean it more frequently in dusty operating conditions.
Yearly or before storage	• Empty the fuel tank before repairs as directed and before yearly storage.

Important: **Refer to your engine owner's manual for additional maintenance procedures.**

Maintenance Safety

- Disconnect the spark-plug wire from the spark plug before performing any maintenance procedure.
- Wear gloves and eye protection when servicing the machine.
- The blade is sharp; contacting the blade can result in serious personal injury. Wear gloves when servicing the blade. Do not repair or alter the blade(s).
- Never tamper with safety devices. Check their proper operation regularly.
- Tipping the machine may cause the fuel to leak. Fuel is flammable and explosive, and can cause personal injury. Run the engine dry or remove the fuel with a hand pump; never siphon the fuel.
- To ensure optimum performance and continued safety certification of the machine, use only genuine Toro replacement parts and accessories. Replacement parts and accessories made by other manufacturers could be dangerous, and such use could void the product warranty.

Preparing for Maintenance

1. Shut off the engine and wait for all moving parts to stop.
2. Disconnect the spark-plug wire from the spark plug (Figure 25).

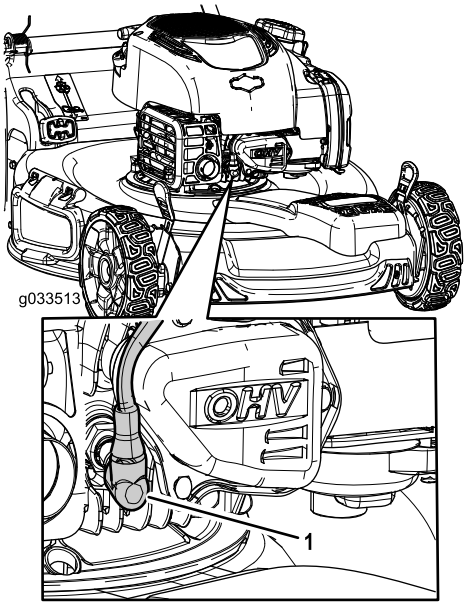

g033513

Figure 25

1. Spark-plug wire

3. After performing the maintenance procedure(s), connect the spark-plug wire to the spark plug.

   Important: **Before tipping the machine to change the oil or replace the blade, allow the fuel tank to run dry through normal usage. If you must tip the machine prior to running out of fuel, use a hand fuel pump to remove the fuel. Always tip the machine onto its side, with the dipstick down.**

Servicing the Air Filter

Service Interval: Every 25 hours

Yearly

1. Unclip the top of the air-filter cover (Figure 26).

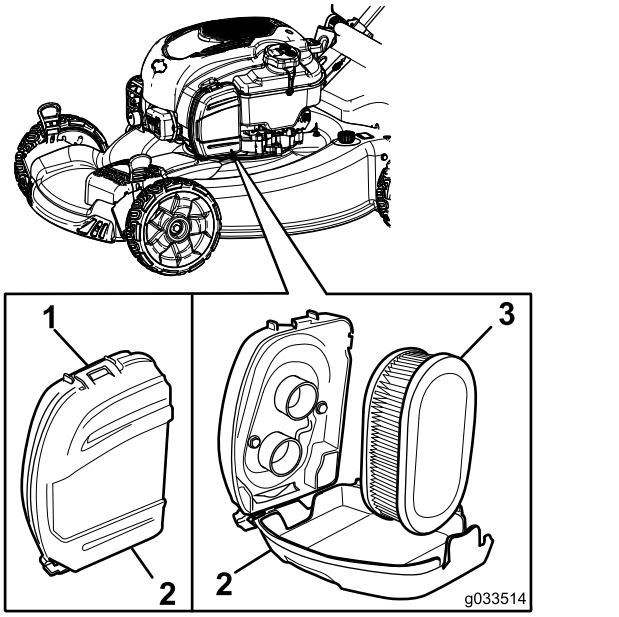

g033514

Figure 26

1. Clip
2. Air-filter cover
3. Air filter

2. Remove the air filter (Figure 26).
3. Inspect the air filter.

   Note: If the air filter is excessively dirty, replace it with a new filter. Otherwise, gently tap the air filter on a hard surface to loosen debris.
4. Install the air filter.
5. Use the clip to install the air-filter cover.

Changing the Engine Oil

Service Interval: Yearly

Changing the engine oil is not required, but if you want to change the oil, use the following procedure.

Note: Run the engine a few minutes before changing the oil to warm it. Warm oil flows better and carries more contaminants.

Engine Oil Specifications

Engine oil capacity	0.44 L (15 fl oz)
Oil viscosity	SAE 30 or SAE 10W-30 detergent oil
API service classification	SJ or higher

1. Move the machine to a level surface.
2. Refer to Preparing for Maintenance (page 19).
3. Remove the dipstick by rotating the cap counterclockwise and pulling it out (Figure 27).

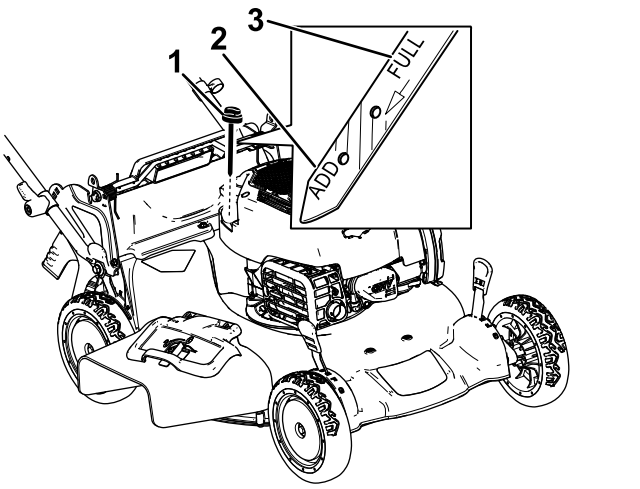

g187518

Figure 27

1. Dipstick
2. Add
3. Full

4. Tip the machine onto its side (so that the air filter is up) to drain the used oil from the oil-fill tube (Figure 28).

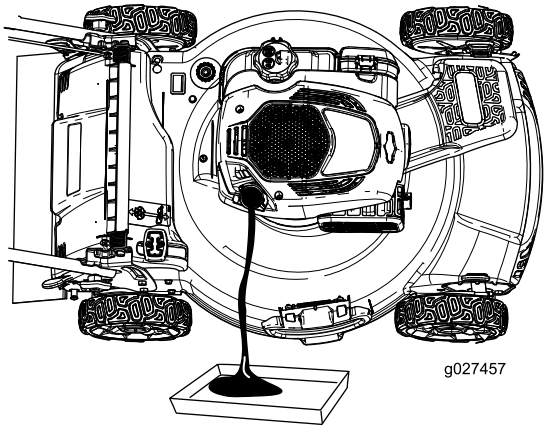

g027457

Figure 28

5. After draining the used oil, return the machine to the operating position.
6. Carefully pour about 3/4 of the engine capacity of oil into the oil-fill tube.
7. Wait 3 minutes for the oil to settle in the engine.
8. Wipe the dipstick clean with a clean cloth.
9. Insert the dipstick into the oil-fill tube, then remove the dipstick.
10. Read the oil level on the dipstick (Figure 27).
    - If the oil level on the dipstick is too low, carefully pour a small amount of oil into the oil-fill tube, wait 3 minutes, and repeat steps 8 through 10 until the oil level on the dipstick is correct.
    - If the oil level on the dipstick is too high, drain the excess oil until the oil level on the dipstick is correct.

    Important: **If the oil level in the engine is too low or too high and you run the engine, you may damage the engine.**
11. Install the dipstick into the oil-fill tube securely.
12. Recycle the used oil properly.

Replacing the Blade

Service Interval: Yearly

Important: ***You will need a torque wrench to install the blade properly*****. If you do not have a torque wrench or are uncomfortable performing this procedure, contact an Authorized Service Dealer.**

Examine the blade whenever you run out of fuel. If the blade is damaged or cracked, replace it immediately. If the blade edge is dull or nicked, have it sharpened and balanced, or replace it.

⚠ WARNING

The blade is sharp; contacting the blade can result in serious personal injury.

Wear gloves when servicing the blade.

1. Refer to Preparing for Maintenance (page 19).
2. Tip the machine onto its side with the air filter up.
3. Use a block of wood to hold the blade steady (Figure 29).

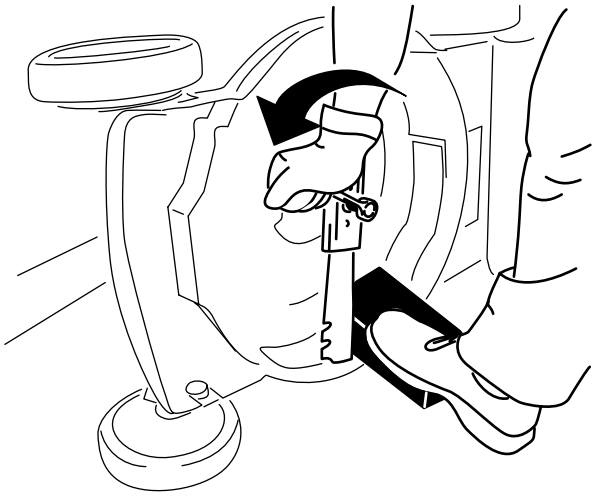

g231389

Figure 29

4. Remove the blade, saving all mounting hardware (Figure 29).
5. Install the new blade and all mounting hardware (Figure 30).

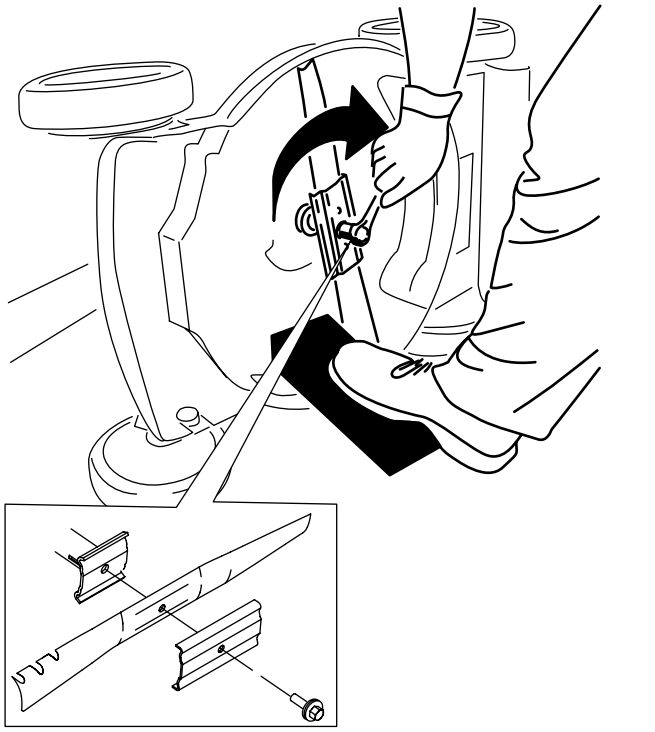

g231390

Figure 30

Important: **Position the curved ends of the blade to point toward the machine housing.**

6. **Use a torque wrench to tighten the blade bolt to 82 N·m (60 ft-lb).**

   Important: **A bolt torqued to 82 N·m (60 ft-lb) is very tight. While holding the blade with a block of wood, put your weight behind the ratchet or wrench and tighten the bolt securely. This bolt is very difficult to overtighten.**

Adjusting the Self-Propel Drive

Whenever you install new self-propel cables or if the self-propel drive is out of adjustment, adjust the self-propel drive.

1. Turn the adjustment knob counterclockwise to loosen the cable adjustment (Figure 31).

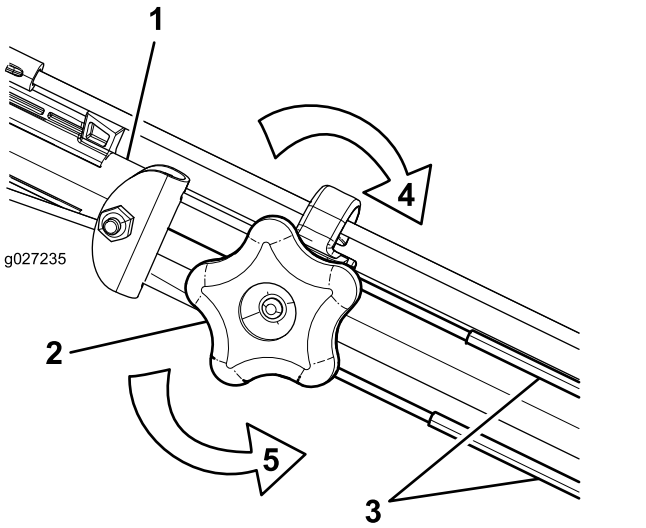

g027235

Figure 31

1. Handle (left side)
2. Adjustment knob
3. Self-propel-drive cables
4. Turn the knob clockwise to tighten the adjustment.
5. Turn the knob counterclockwise to loosen the adjustment.

2. Adjust the tension on the cables (Figure 31) by pulling them back or pushing them forward and then holding them in that position.

   Note: Push the cables toward the engine to increase the traction; pull the cables away from the engine to decrease the traction.

   Note: For best performance, adjust the cables to the same length.

3. Turn the adjustment knob clockwise to tighten the adjustment of the cables.

Storage

Store the machine in a cool, clean, dry place.

Preparing the Machine for Storage

1. On the last refueling of the year, add fuel stabilizer (such as Toro Premium Fuel Treatment) to the fuel as directed on the label.
2. Dispose of any unused fuel properly. Recycle it according to local codes or use it in your automobile.

   Note: Old fuel in the fuel tank is the leading cause of hard starting. Do not store fuel without fuel stabilizer more than 30 days, and do not store stabilized fuel more than 90 days.
3. Run the machine until the engine shuts off from running out of fuel.
4. Start the engine again and allow it to run until it shuts off. When you can no longer start the engine, it is sufficiently dry.
5. Disconnect the wire from the spark plug and connect the wire to the retaining post (if equipped).
6. Remove the spark plug, add 30 ml (1 fl oz) of engine oil through the spark-plug hole, and pull the starter rope slowly several times to distribute oil throughout the cylinder to prevent cylinder corrosion during the off-season.
7. Loosely install the spark plug.
8. Tighten all nuts, bolts, and screws.

Removing the Machine from Storage

1. Check and tighten all fasteners.
2. Remove the spark plug and spin the engine rapidly by pulling the recoil-start handle to blow the excess oil from the cylinder.
3. Install the spark plug and tighten it with a torque wrench to 20 N·m (15 ft-lb).
4. Perform any maintenance procedures; refer to Maintenance (page 19).
5. Check the engine-oil level; refer to Checking the Engine-Oil Level (page 10).
6. Fill the fuel tank with fresh fuel; refer to Fuel Safety (page 9).
7. Connect the wire to the spark plug.

European Privacy Notice

The Information Toro Collects
Toro Warranty Company (Toro) respects your privacy. In order to process your warranty claim and contact you in the event of a product recall, we ask you to share certain personal information with us, either directly or through your local Toro company or dealer.

The Toro warranty system is hosted on servers located within the United States where privacy law may not provide the same protection as applies in your country.

BY SHARING YOUR PERSONAL INFORMATION WITH US, YOU ARE CONSENTING TO THE PROCESSING OF YOUR PERSONAL INFORMATION AS DESCRIBED IN THIS PRIVACY NOTICE.

The Way Toro Uses Information
Toro may use your personal information to process warranty claims, to contact you in the event of a product recall and for any other purpose which we tell you about. Toro may share your information with Toro's affiliates, dealers or other business partners in connection with any of these activities. We will not sell your personal information to any other company. We reserve the right to disclose personal information in order to comply with applicable laws and with requests by the appropriate authorities, to operate our systems properly or for our own protection or that of other users.

Retention of your Personal Information
We will keep your personal information as long as we need it for the purposes for which it was originally collected or for other legitimate purposes (such as regulatory compliance), or as required by applicable law.

Toro's Commitment to Security of Your Personal Information
We take reasonable precautions in order to protect the security of your personal information. We also take steps to maintain the accuracy and current status of personal information.

Access and Correction of your Personal Information
If you would like to review or correct your personal information, please contact us by email at legal@toro.com.

Australian Consumer Law

Australian customers will find details relating to the Australian Consumer Law either inside the box or at your local Toro Dealer.