Form No. 3459-676 Rev D

TORO®

Count on it.

Parts Catalog

52in Z Master® 4000 Series

Riding Mower

Model No. 74002—Serial No. 414067528 and Up

Register at www.Toro.com.
Original Instructions (EN)

3459-676 D

Ordering Replacement Parts

To order replacement parts, please supply the part number, the quantity, and the description of each part desired.

Understanding Reference Numbers

Each identified part in an illustration has a reference number. The reference number for a part also appears in the parts list, along with other information about the part.

This catalog uses two special reference number formats, one to indicate parts in a service assembly and another to indicate the quantity of a given part in an illustration.

Service Assembly Reference Numbers

Parts in service assemblies have reference numbers in the form a:b. The a represents the reference number of the entire service assembly and the b represents a sequential number unique to each part within the service assembly.

For example, a wheel assembly might be identified by reference number 6, the tire by 6:1, the valve by 6:2, and the wheel by 6:3. When you order the assembly identified by reference number 6, you receive all parts identified by reference numbers 6:1,6:2, and 6:3. However, you may also order any part individually. Reference numbers of this type appear in illustration and in parts lists.

Reference Numbers Indicating Quantity

In an illustration, if a reference number indicates more than one part, the reference number has the form nX y. The n represents the quantity of the part, the X is the multiplication symbol, and the y represents the reference number.

For example, in an illustration, the reference number 2X 37 means that two of the parts identified by reference number 37 are indicated.

Contents

Frame Assembly . . . 4
Roll-Over Protection System Assembly No. 139-8062 . . . 6
Hydraulic Drive Assembly . . . 8
RH Transaxle Assembly No. 145-3695 . . . 10
LH Transaxle Assembly No. 145-3696 . . . 12
Throttle, Choke Cables and Guard Assembly . . . 14
Fuel System Assembly . . . 16
Fuel Tank Assembly No. 139-6722 . . . 18
Seat Mount Assembly . . . 20
Seat Assembly No. 144-2632 . . . 22
Motion Control Assembly . . . 24
Left and Right Control Arm Assembly . . . 26
Caster Wheel Assembly . . . 28
Caster and Wheel Assembly . . . 30
Rear Wheel Assembly . . . 32
Electrical Assembly . . . 34
Wire Harness Assembly No. 139-8078 . . . 36
Deck Lift Assembly . . . 38
Deck Strut Assembly No. 140-1179 . . . 40
Engine, Clutch and Muffler Assembly . . . 42
Decal Assembly . . . 44
Deck Assembly . . . 46
Deck Decal Assembly No. 144-6587 . . . 48
Spindle Assembly No. 137-9780 . . . 50
Deflector Assembly No. 144-2635 . . . 52
Idler Arm Assembly No. 139-1087 . . . 54
Attachments and Accessories . . . 56

© 2024—The Toro® Company
8111 Lyndale Avenue South
Bloomington, MN 55420

Contact us at www.Toro.com.
Printed in the USA.
All Rights Reserved

Frame Assembly

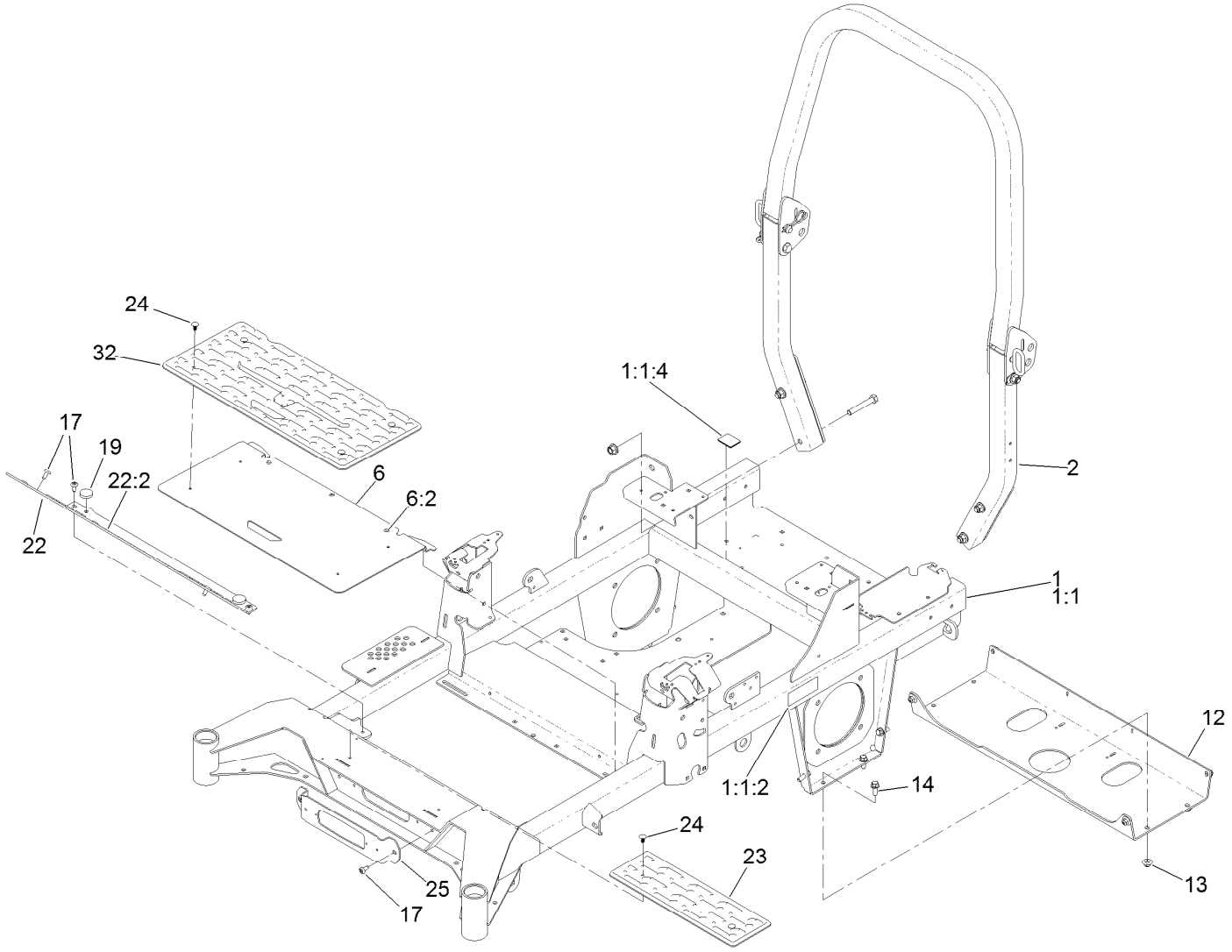

Frame Assembly (continued)

Ref.	Part Number	Qty.	Description
1	144-6589	1	Frame ASM
1:1		1	Frame-48/52 ●
1:1:2	126-4363	2	Decal-Warning
1:1:4	144-2687	1	Decal, Belt Routing
2	139-8062	1	ASM-ROPS
6	138-6098	1	Floor Pan ASM
6:2	109-9233	2	Bumper-Push-In, Rubber
12	139-6717-01	1	Plate-Hydro
13	109-6658	8	Nut-Flange, NI

Ref.	Part Number	Qty.	Description
14	3234-42	8	Screw-HHF
17	138-9753	6	Screw
19	109-9233	2	Bumper-Push-In, Rubber
22	140-4995	1	Toeboard
22:2	126-8383	1	Decal-Danger
23	140-4992	1	Step
24	117-2382	6	Plug-Plastic
25	140-4994-01	1	Bracket-Light
32	140-7950	1	Floormat-Fixed Seat

● Not serviced separately

Roll-Over Protection System Assembly
No. 139-8062

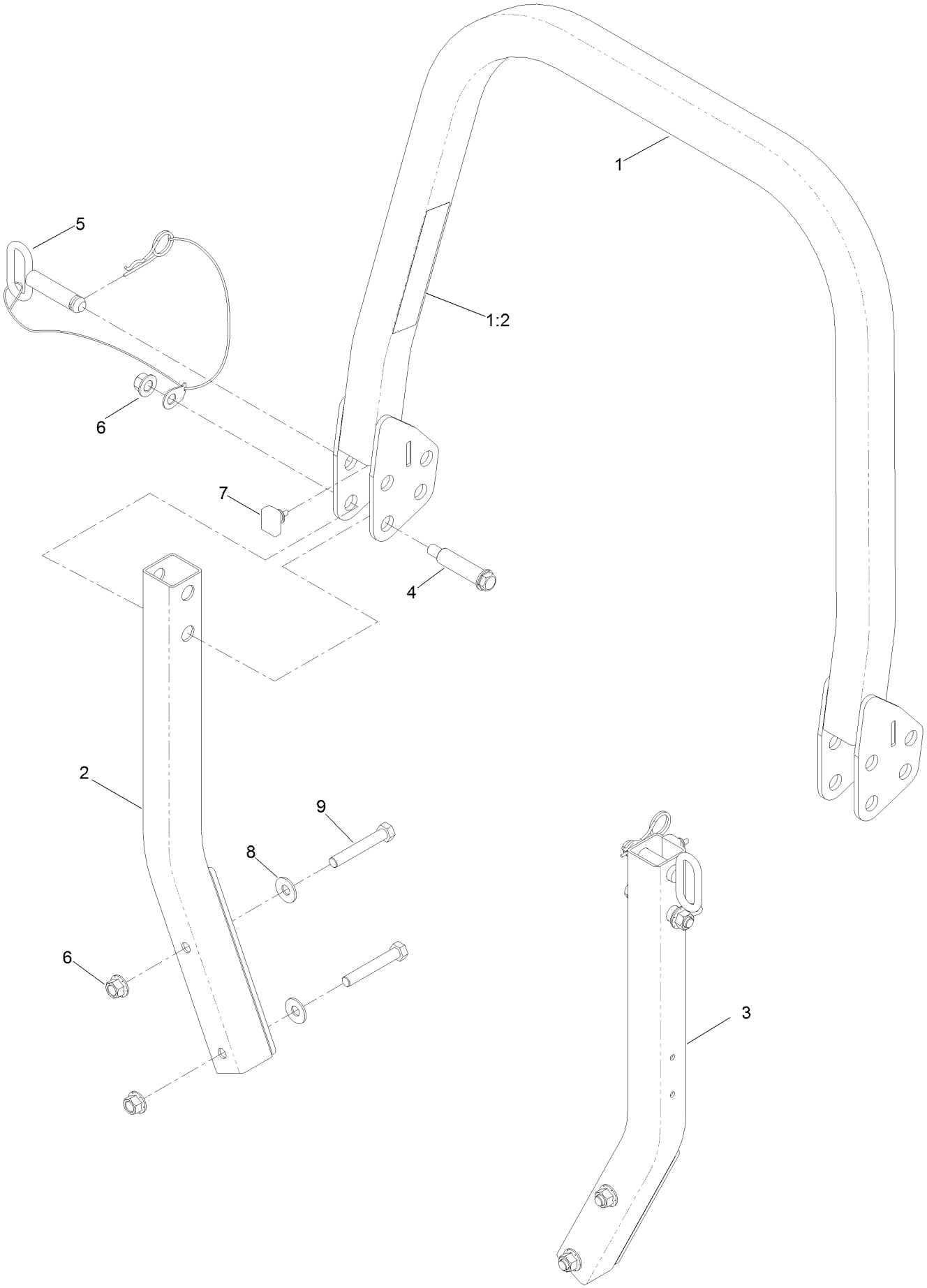

Roll-Over Protection System Assembly No. 139-8062 (continued)

Ref.	Part Number	Qty.	Description
1		1	Upper ROPS ASM ●
1:2	107-3069	1	Decal-Warning
2		1	RH Lower ROPS ASM ●
3		1	LH Lower ROPS ASM ●
4	126-9209	2	Bolt-Shoulder
5	103-4553	2	ROPS Fold Pin ASM
6	99-5107	6	Nut-Lock
7	109-5337	2	Bumper-ROPS
8	109-9505	4	Washer-Spring
9	325-13	4	Screw-HH

● Not serviced separately

Hydraulic Drive Assembly

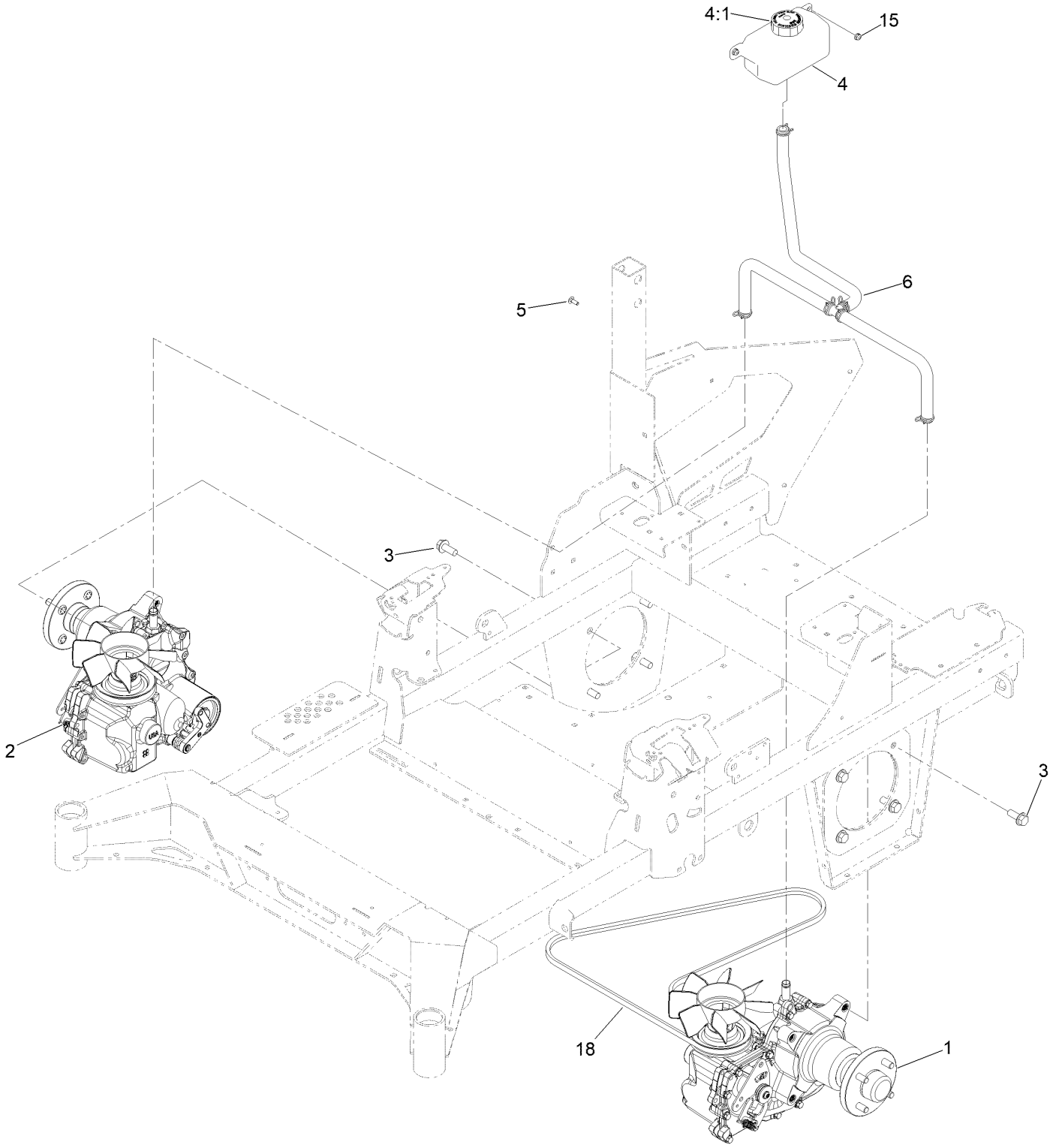

Hydraulic Drive Assembly (continued)

Ref.	Part Number	Qty.	Description
1	145-3696	1	LH Transaxle ASM W/Arm
2	145-3695	1	RH Transaxle ASM W/Arm
3	3234-38	8	Screw-HHF
4	119-9908	1	Hydraulic Reservoir ASM
4:1	109-3320	1	Cap-Reservoir, HYD

Ref.	Part Number	Qty.	Description
5	3229-28	2	Screw-CARR
6	140-1225	1	ASM-Hose, Hydraulic
15	104-7201	2	Nut-HF, NI
18	140-7994	1	Belt-V

RH Transaxle Assembly No. 145-3695

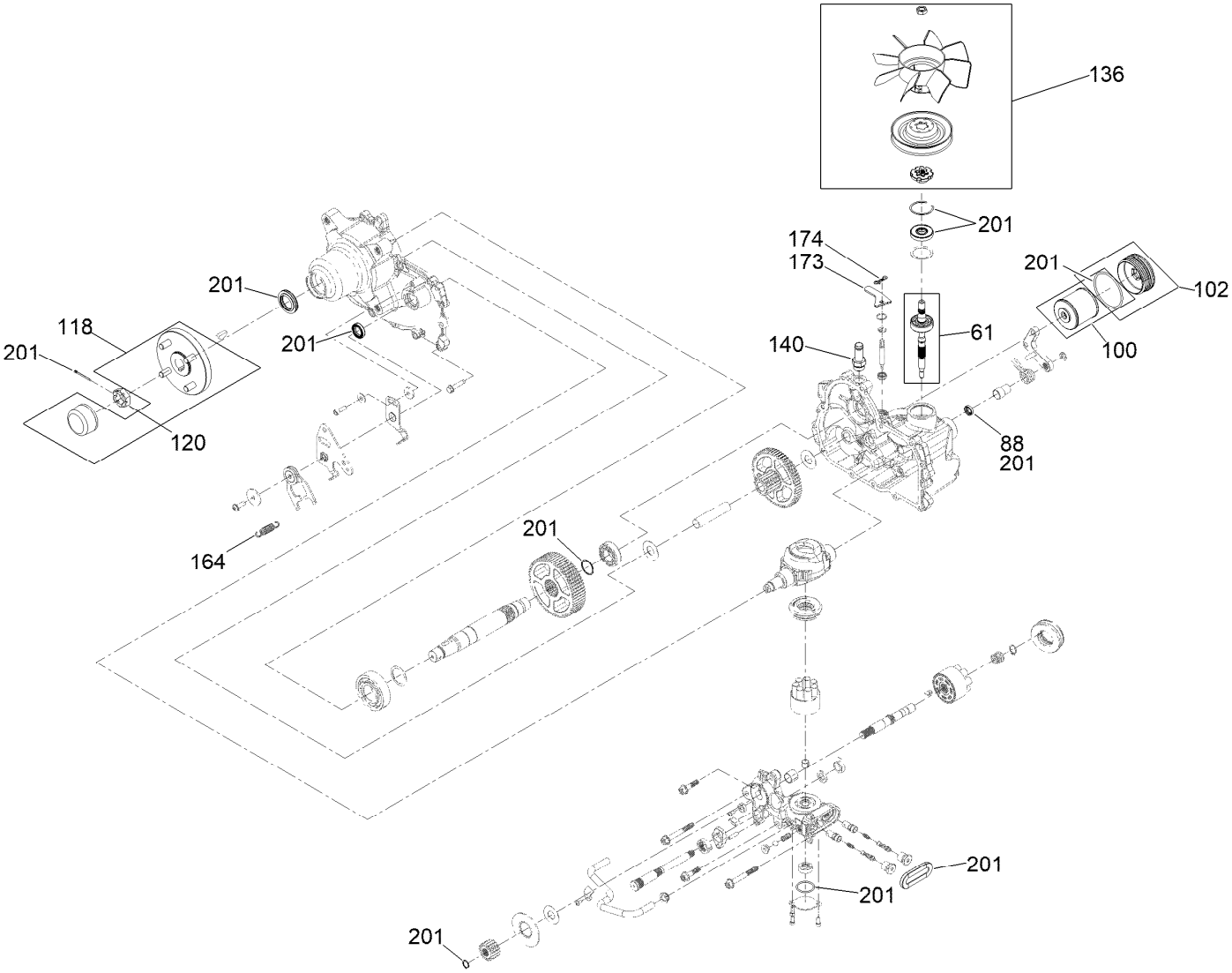

RH Transaxle Assembly No. 145-3695 (continued)

Ref.	Part Number	Qty.	Description
61	147-1671	1	Kit, Input Shaft
88	145-3637	1	Seal, Brake
100	144-6598	1	Kit, Filter
102	144-6599	1	Kit, Filler Cap
118	144-6594	1	Hub-4 Bolt
120	144-6595	1	Nut, Slotted

Ref.	Part Number	Qty.	Description
136	144-6597	1	Kit, Fan And Pulley
140	144-6601	1	Fitting-5/8 Beaded, 7/8 SAE
164	125-4684	1	Spring-Extension
173	139-8091	1	Plate-Lever, Bypass
174	119-1415	1	Pin-Cotter, Locking
201	144-6600	1	Kit, Seal

LH Transaxle Assembly No. 145-3696

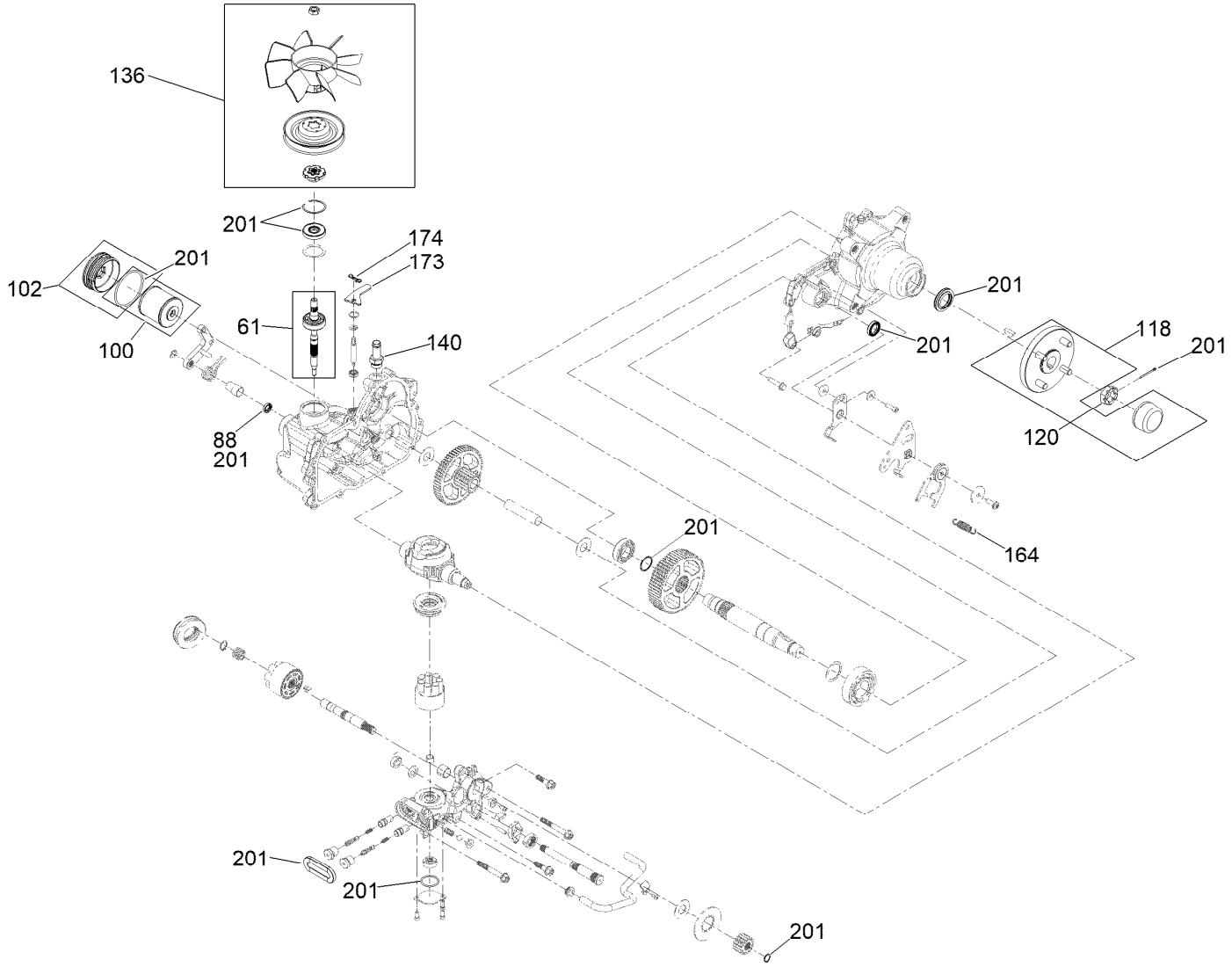

LH Transaxle Assembly No. 145-3696 (continued)

Ref.	Part Number	Qty.	Description
61	147-1671	1	Kit, Input Shaft
88	145-3637	1	Seal, Brake
100	144-6598	1	Kit, Filter
102	144-6599	1	Kit, Filler Cap
118	144-6594	1	Hub-4 Bolt
120	144-6595	1	Nut, Slotted
136	144-6597	1	Kit, Fan And Pulley
140	144-6601	1	Fitting-5/8 Beaded, 7/8 SAE
164	125-4684	1	Spring-Extension
173	139-8091	1	Plate-Lever, Bypass
174	119-1415	1	Pin-Cotter, Locking
201	144-6600	1	Kit, Seal

Throttle, Choke Cables and Guard Assembly

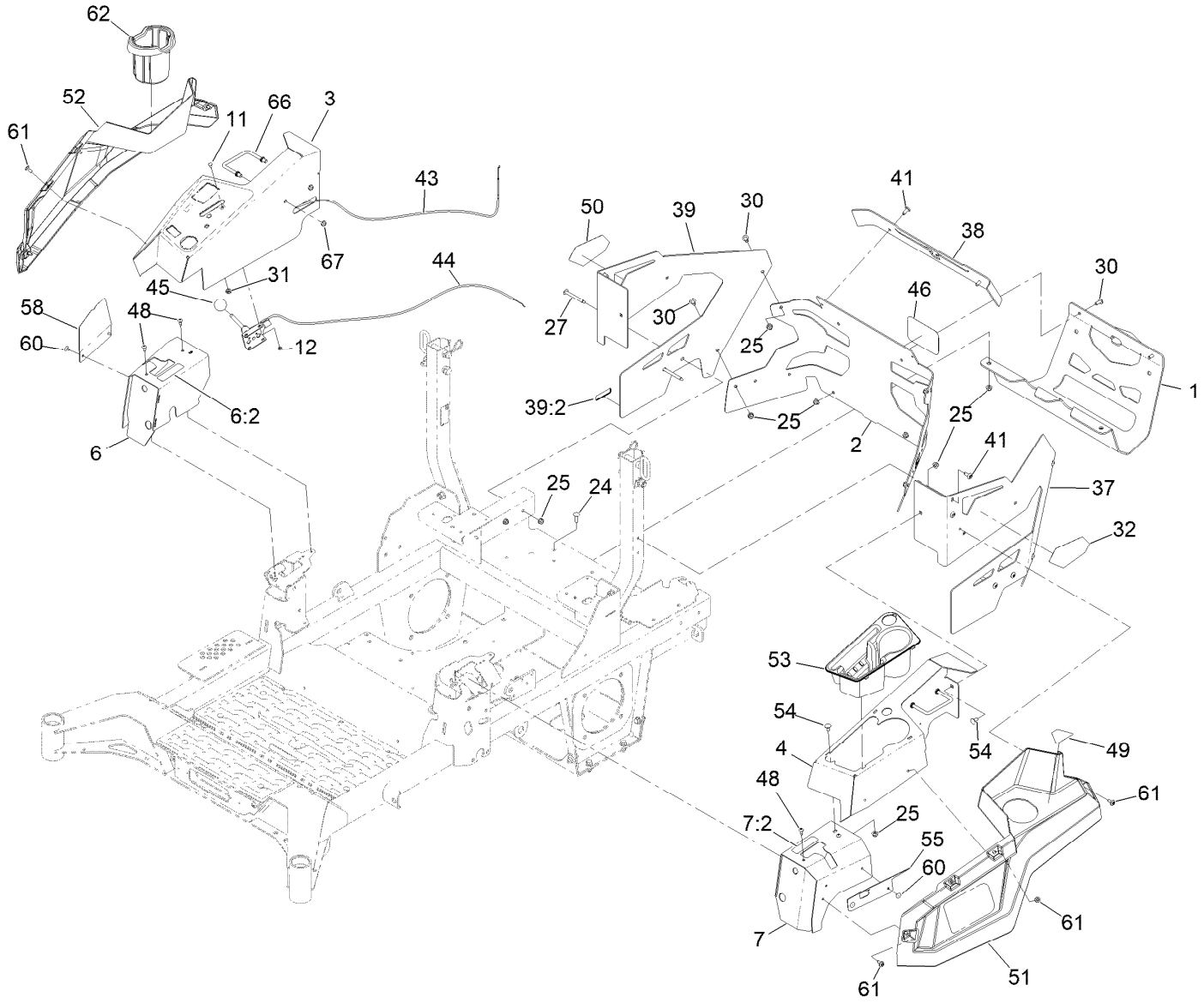

Throttle, Choke Cables and Guard Assembly (continued)

Ref.	Part Number	Qty.	Description
1	139-6719-03	1	Guard-Muffler [black]
2	144-2637	1	Rear Guard ASM
3	144-6551-01	1	Console-RH
4	144-2638-01	1	Console-LH
6	140-4867	1	RH Cover ASM
6:2	99-8936	1	Decal-Control, Motion
7	140-4866	1	LH Cover ASM
7:2	99-8936	1	Decal-Control, Motion
11	1-807513	2	Bolt-CARR
12	3296-2	2	Nut-Lock, NI
24	3230-22	2	Screw-CARR
25	104-8300	16	Nut-HF, NI
27	126-6267	4	Screw-TTH
30	126-6268	6	Screw-TTH
31	3220-3	1	Nut-HJ
32	139-1149	1	Decal - 4000 Series, LH
37	145-6964-01	1	Guard-Rear, LH
38	140-1221-01	1	Guard-Rear, Top
39	145-7012	1	RH Rear Guard ASM
39:2	133-8062	1	Decal-Spark Arrestor

Ref.	Part Number	Qty.	Description
41	138-9753	6	Screw
43	139-6735	1	Cable-Control, Choke
44	139-6734	1	Cable-Control, Throttle
45	1-603175	1	Knob-Ball
46	105-8278	1	Decal
48	87-6620	4	Screw-Tph Thd Form
49	126-9939	1	Decal-Fill, Fuel
50	140-7987	1	Decal-4000 Series, RH
51	140-7979	1	Side Pod, LH
52	140-7980	1	Side Pod, RH
53	140-7968	1	Cup Holder
54	3230-18	4	Screw-CARR
55	140-7996-03	1	Plate-Cover, LH Front
58	140-7998-03	1	Plate-Cover, RH Front
60	130-8451	4	Rivet-Trifold
61	120-7950	8	Screw-Torx
62	140-8019	1	Cupholder-RH
66	144-2642	2	Rod-Support, Pod
67	3296-59	4	Nut-Lock, NI

Fuel System Assembly

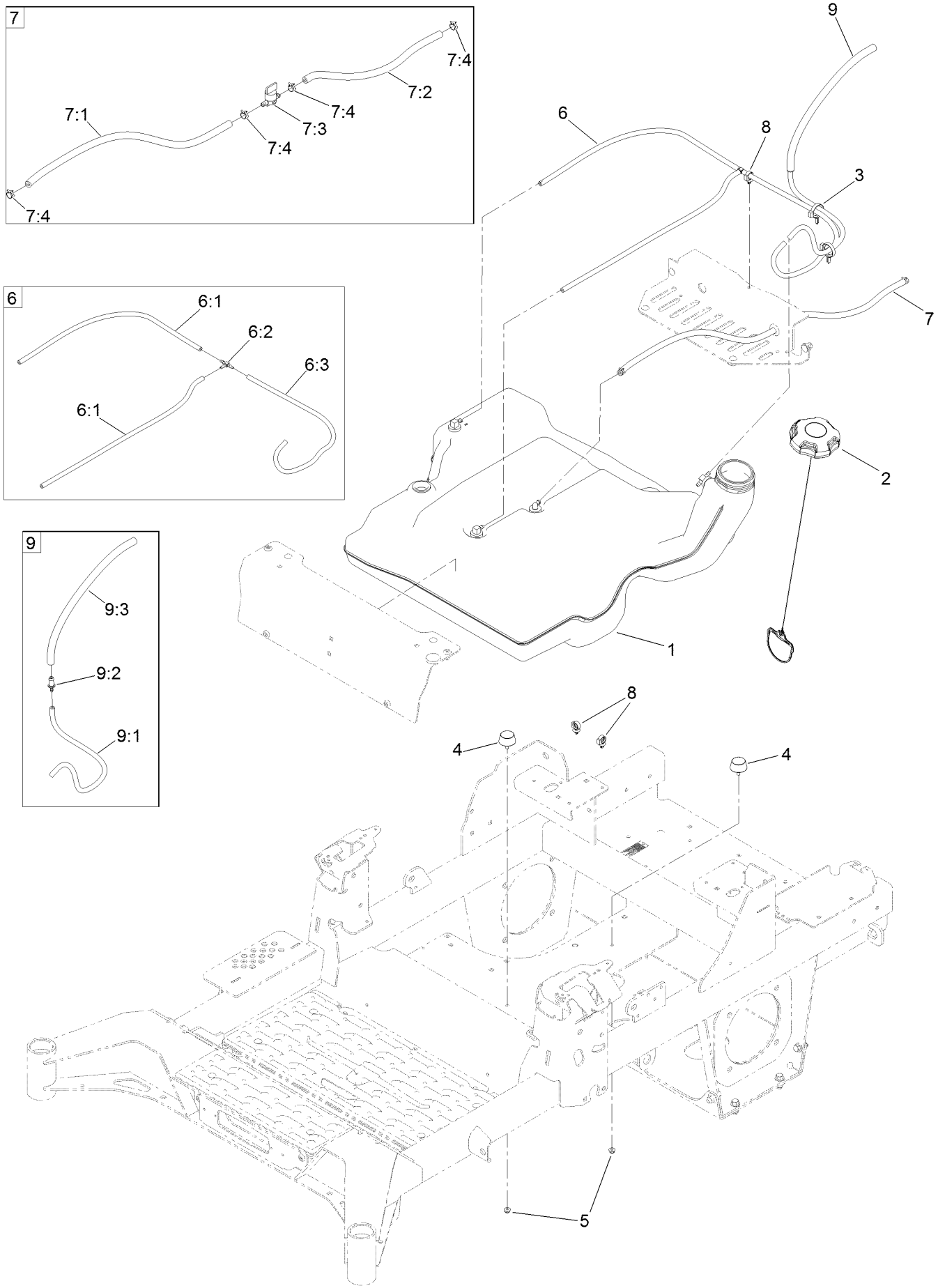

Fuel System Assembly (continued)

Ref.	Part Number	Qty.	Description
1	139-6722	1	Fuel Tank ASM
2	135-4801	1	Cap-Fuel, Ratcheting
3	104-2490	2	Clamp-Hose
4	131-8834	2	Bumper
5	104-7201	2	Nut-HF, NI
6	139-8067	1	Vent Hose ASM
6:1	138-3152	2	Hose-Fuel
6:2	120-2234	1	Fitting-Tee
6:3	140-4956	1	Hose-Fuel
7	139-8068	1	Fuel Hose ASM

Ref.	Part Number	Qty.	Description
7:1	109-0298	1	Line-Fuel
7:2	114-3766	1	Hose-Fuel
7:3	1-603770	1	Valve-Fuel
7:4	2412-98	4	Clamp-Hose
8	126-5523	3	Clip
9	140-4957	1	ASM-Fuel Vent
9:1	138-3152	1	Hose-Fuel
9:2	116-4630	1	Fitting-Orifice, Straight
9:3	116-4344	1	Hose-Fuel

Fuel Tank Assembly No. 139-6722

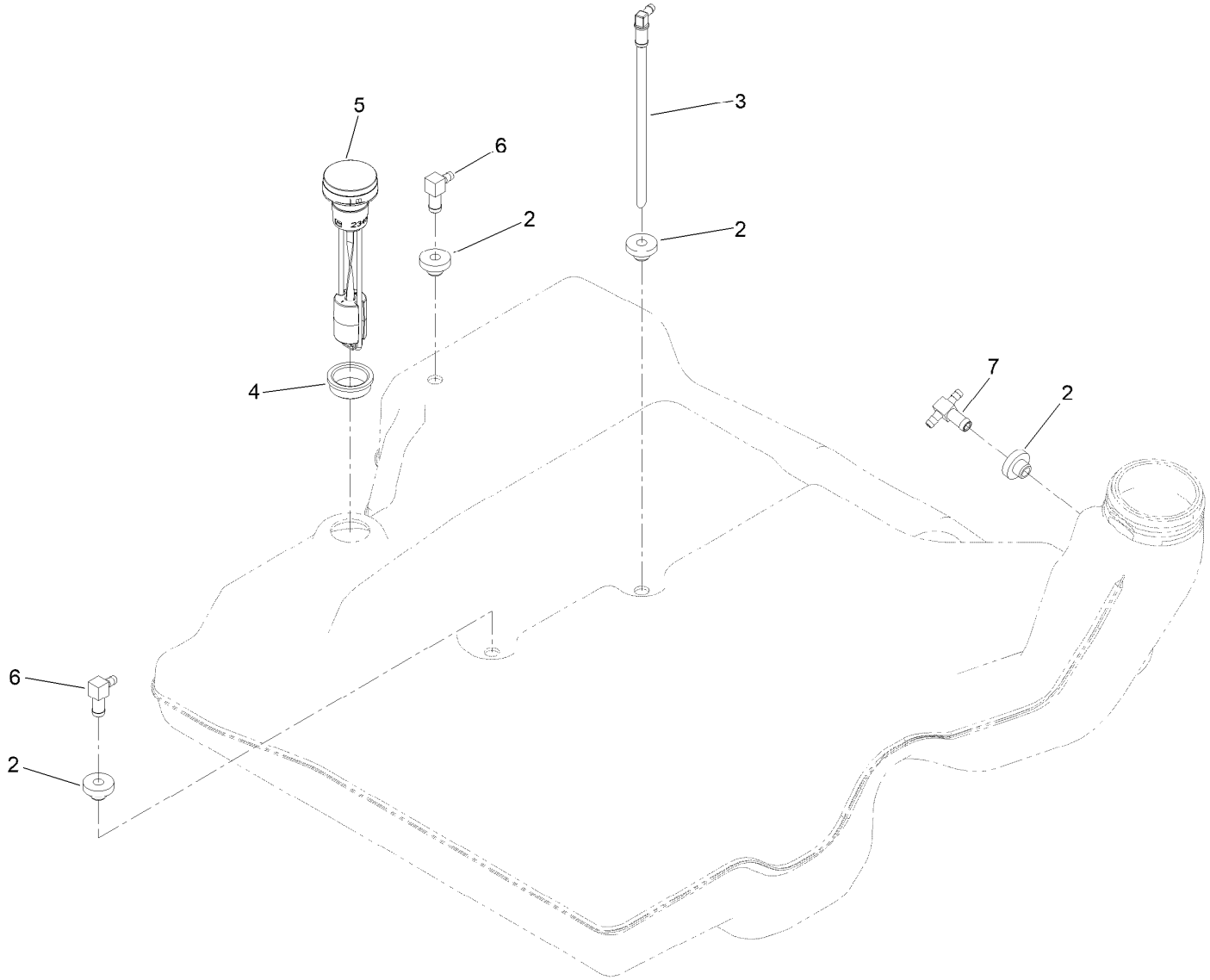

Fuel Tank Assembly No. 139-6722 (continued)

Ref.	Part Number	Qty.	Description
2	46-6560	4	Bushing
3	140-4955	1	Connector Elbow-90 DEG
4	133-9269	1	Grommet-Fuel
5	139-8058	1	Gauge-Fuel
6	126-9057	2	Fitting-90 DEG
7	140-4954	1	Fitting-Tee

Seat Mount Assembly

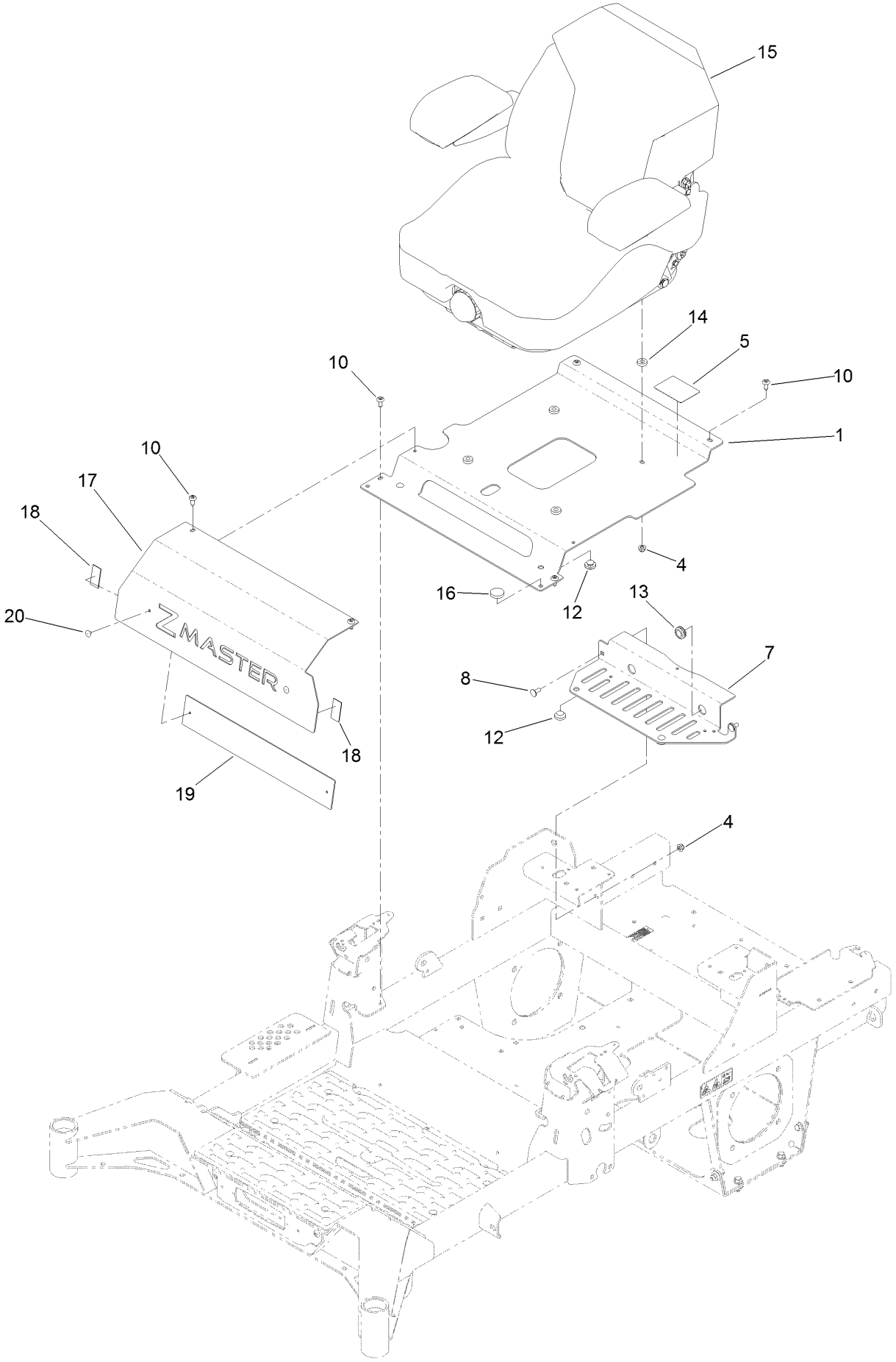

Seat Mount Assembly (continued)

Ref.	Part Number	Qty.	Description
1	140-1165-03	1	Pan-Seat [black]
4	104-8300	6	Nut-HF, NI
5	144-2669	1	Decal-Service Aid
7	147-2436-03	1	Plate-Tank Retainer, Rear
8	3230-23	2	Bolt-CARR
10	138-9753	6	Screw
12	135-0505	4	Bumper-Seat
13	1-543286	1	Grommet
14	5-0652	4	Spacer
15	144-2632	1	Seat ASM-Suspension
16	109-9233	1	Bumper-Push-In, Rubber
17	140-1207-03	1	Plate-Tank Retainer, Front
18	130-0733	2	Pad-Rubber
19	140-4910-01	1	Plate-Backer
20	130-8451	2	Rivet-Trifold

Seat Assembly No. 144-2632

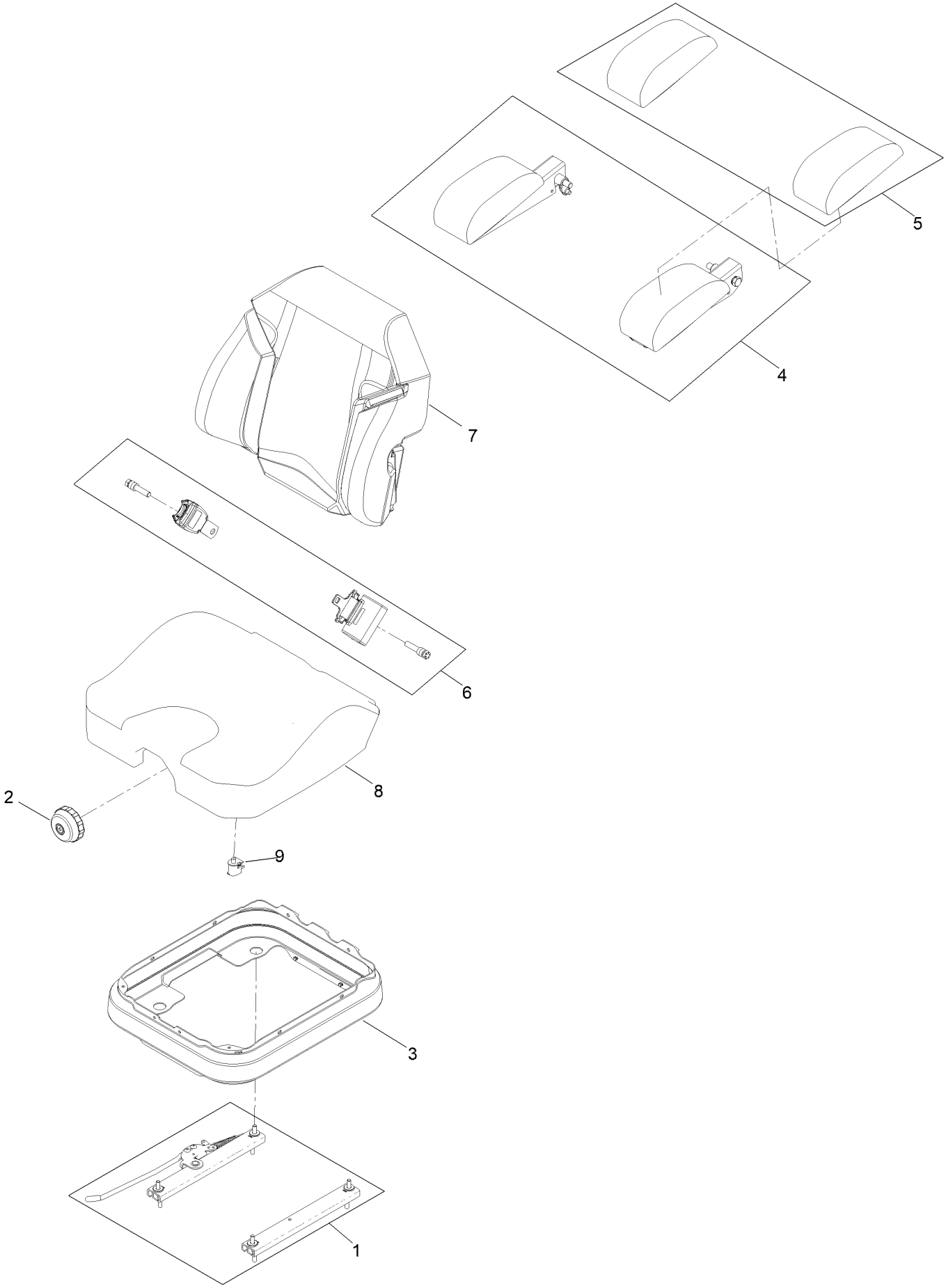

Seat Assembly No. 144-2632 (continued)

Ref.	Part Number	Qty.	Description
1	140-8012	1	Seat Track Set
2	116-8911	1	Knob-Adjuster
3	126-8559	1	Bellows-Seat
4	145-3641	1	Armrest Kit
5	145-3642	1	Pads-Armrest
6	126-8560	1	Kit-Seat Belt
7	145-3643	1	Cover-Back, Seat
8	145-3659	1	Cover-Bottom, Seat
9	82-2190	1	Switch-Bail

Motion Control Assembly

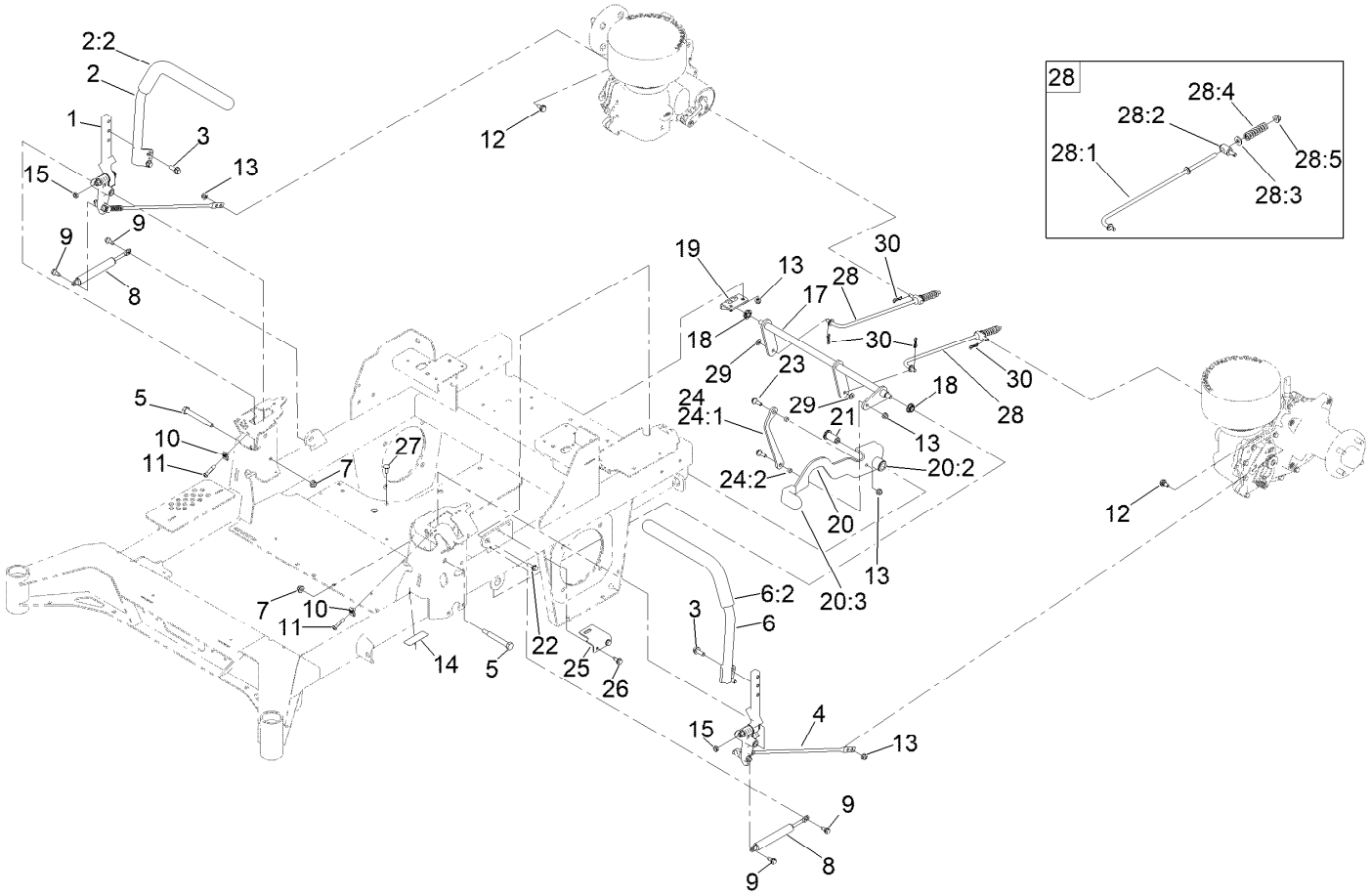

Motion Control Assembly (continued)

Ref.	Part Number	Qty.	Description
1	139-6697	1	Motion Control ASM-RH
2	139-1089	1	Handle ASM - RH
2:2	109-5668	1	Grip-Lever, Control
3	3234-42	4	Screw-HHF
4	139-6696	1	Motion Control ASM-LH
5	115-5099	2	Bolt-Pivot
6	139-1090	1	Handle ASM - LH
6:2	109-5668	1	Grip-Lever, Control
7	104-8301	2	Nut-HF, NI
8	142-6851	2	Damper
9	126-4424	4	Screw-Shoulder
10	112-3306	2	Nut
11	126-4299	2	Screw-HSBH
12	37-8771	2	Bolt-Shoulder, HF
13	104-8300	6	Nut-HF, NI
14	115-9625	1	Decal-Brake, Parking
15	3218-3	2	Nut-Jam
17	144-2658	1	Brake ASM
18	126-5820	2	Bearing-Spherical
19	139-6742	1	Bracket-Brake

Ref.	Part Number	Qty.	Description
20	139-6726	1	Brake Lever ASM W/Grip
20:2	109-8054	2	Bushing-Flange
20:3	132-4749	1	Grip-Lever
21	139-6743	1	Pivot-Handle
22	3234-29	1	Screw-HHF
23	116-2670	2	Screw-Shoulder
24	144-6566	1	Brake Link ASM
24:1	144-6565	1	Plate-Link, Handle
24:2	116-4976	2	Bushing-Sleeve
25	139-6745	1	Plate-Switch
26	32144-70	2	Screw-HWHTF
27	3230-23	2	Bolt-CARR
28	144-0353	2	Brake Rod ASM
28:1	140-4952	1	Rod-Brake
28:2	139-6741	1	Fitting-Rod
28:3	3256-3	1	Washer-Flat
28:4	144-2645	1	Spring-Compression
28:5	104-8301	1	Nut-HF, NI
29	3256-45	2	Washer-Flat
30	119-1415	4	Pin-Cotter, Locking

Left and Right Control Arm Assembly

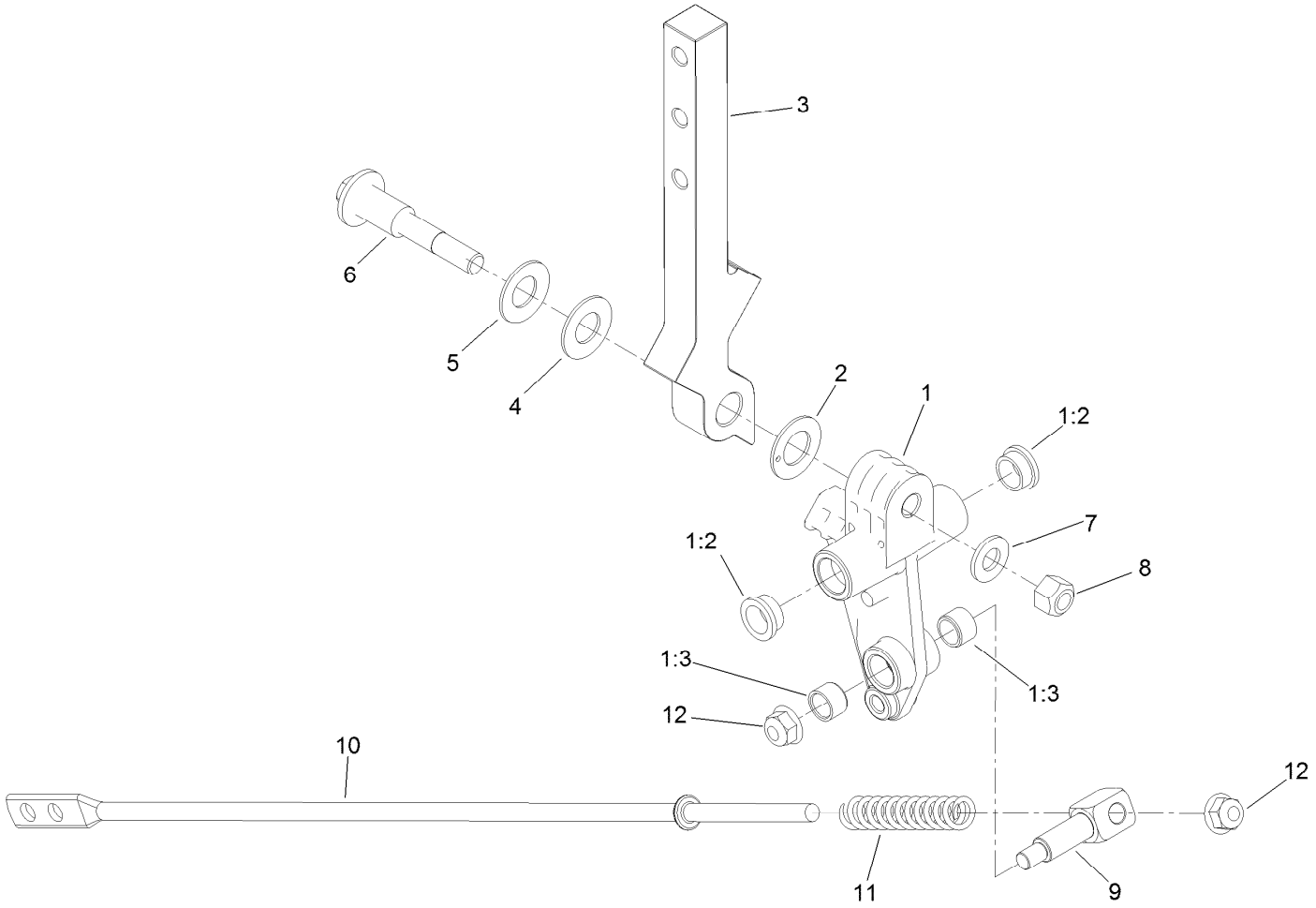

Left and Right Control Arm Assembly (continued)

Ref.	Part Number	Qty.	Description
1	126-3773	1	Control Arm ASM
1:2	126-8909	2	Bushing
1:3	1-413152	2	Bushing-Sleeve
2	126-7296	1	Washer-Friction
3	126-8182	1	Arm-Control
4	117-1240	1	Washer
5	119-8925	1	Washer-Belleville
6	117-1198	1	Bolt-Pivot
7	3256-24	1	Washer-Plain
8	32152-2	1	Nut-Lock, Cone
9	126-5434	1	Swivel
10	140-4949	1	Link-Control
11	126-8195	1	Spring-Return, Neutral
12	104-8300	2	Nut-HF, NI

Caster Wheel Assembly

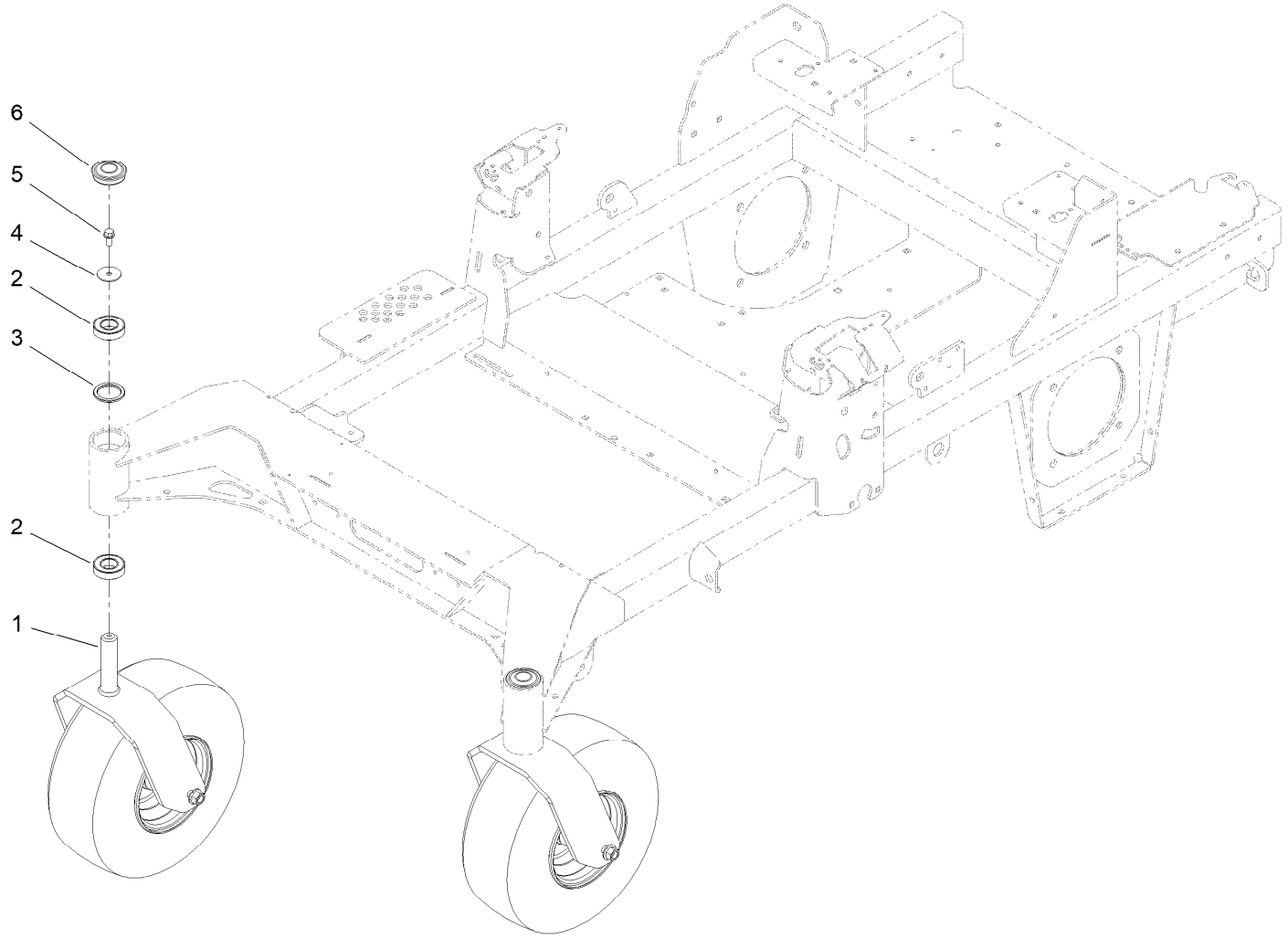

Caster Wheel Assembly (continued)

Ref.	Part Number	Qty.	Description
1		2	ASM, Front Caster W/ Fork ●
2	109-3678	4	Bearing-Ball
3	145-3660	2	Spacer-Bearing
4	3256-68	2	Washer-Flat
5	3234-5	2	Screw-HHF
6	144-0375	2	Cap, Grease

● Not serviced separately

Caster and Wheel Assembly

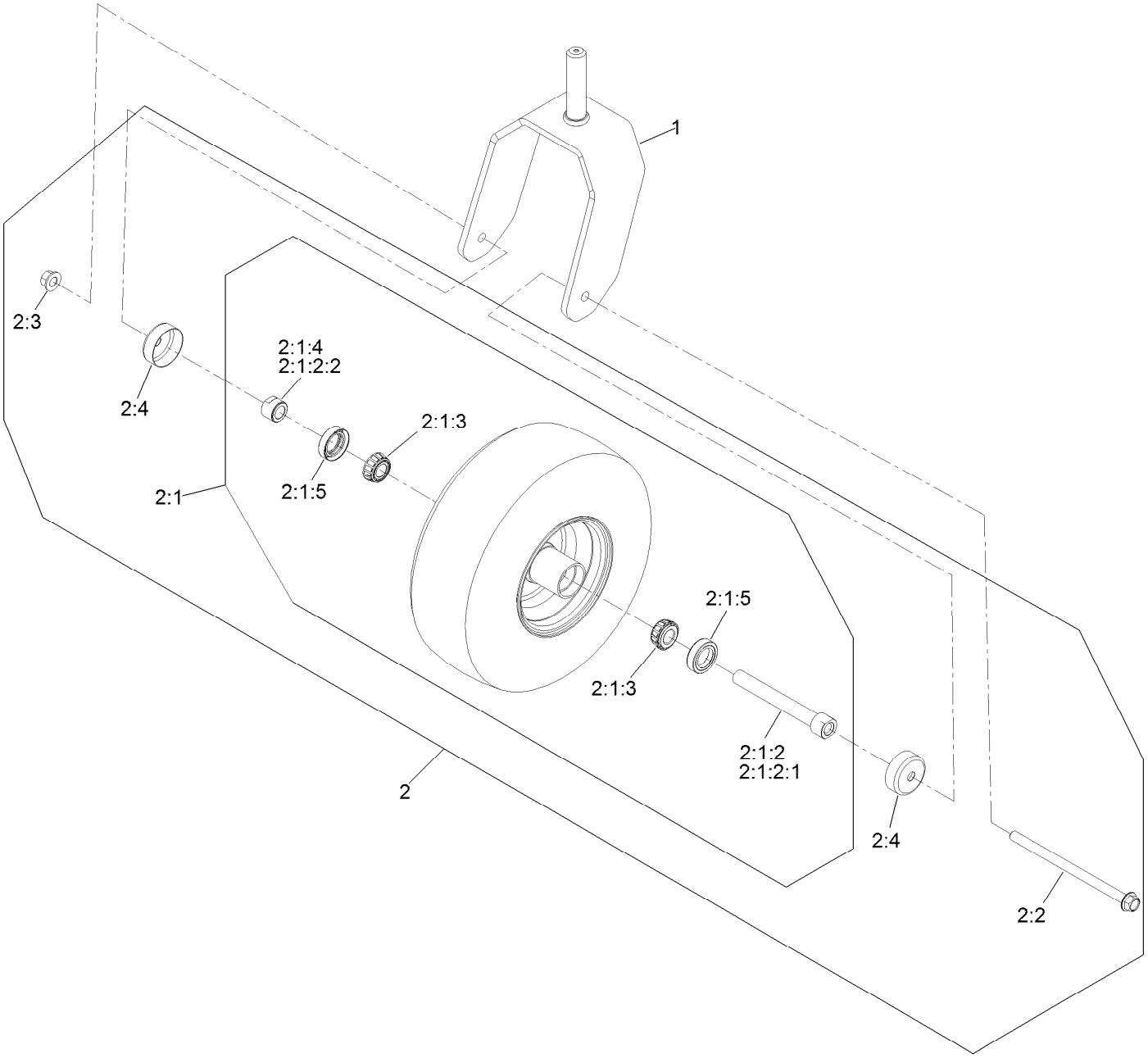

Caster and Wheel Assembly (continued)

Ref.	Part Number	Qty.	Description
1	142-7827-01	1	Fork-Caster
2	140-4896	1	Semi Pneumatic ASM 13X6.50-6
2:1		1	ASM Whl/Brgs 13X6.50-6 ●
2:1:2	126-7796	1	Caster Axle ASM
2:1:2:1	126-5220	1	Axle-Caster
2:1:2:2	103-3051	1	Spacer-Nut
2:1:3	1-633585	2	Bearing-Cone, Taper
2:1:4	103-3051	1	Spacer-Nut
2:1:5	103-0063	2	Seal-Caster
2:2	126-5389	1	Screw-HHF
2:3	99-5107	1	Nut-Lock
2:4	103-2768	2	Guard-Seal

● Not serviced separately

Rear Wheel Assembly

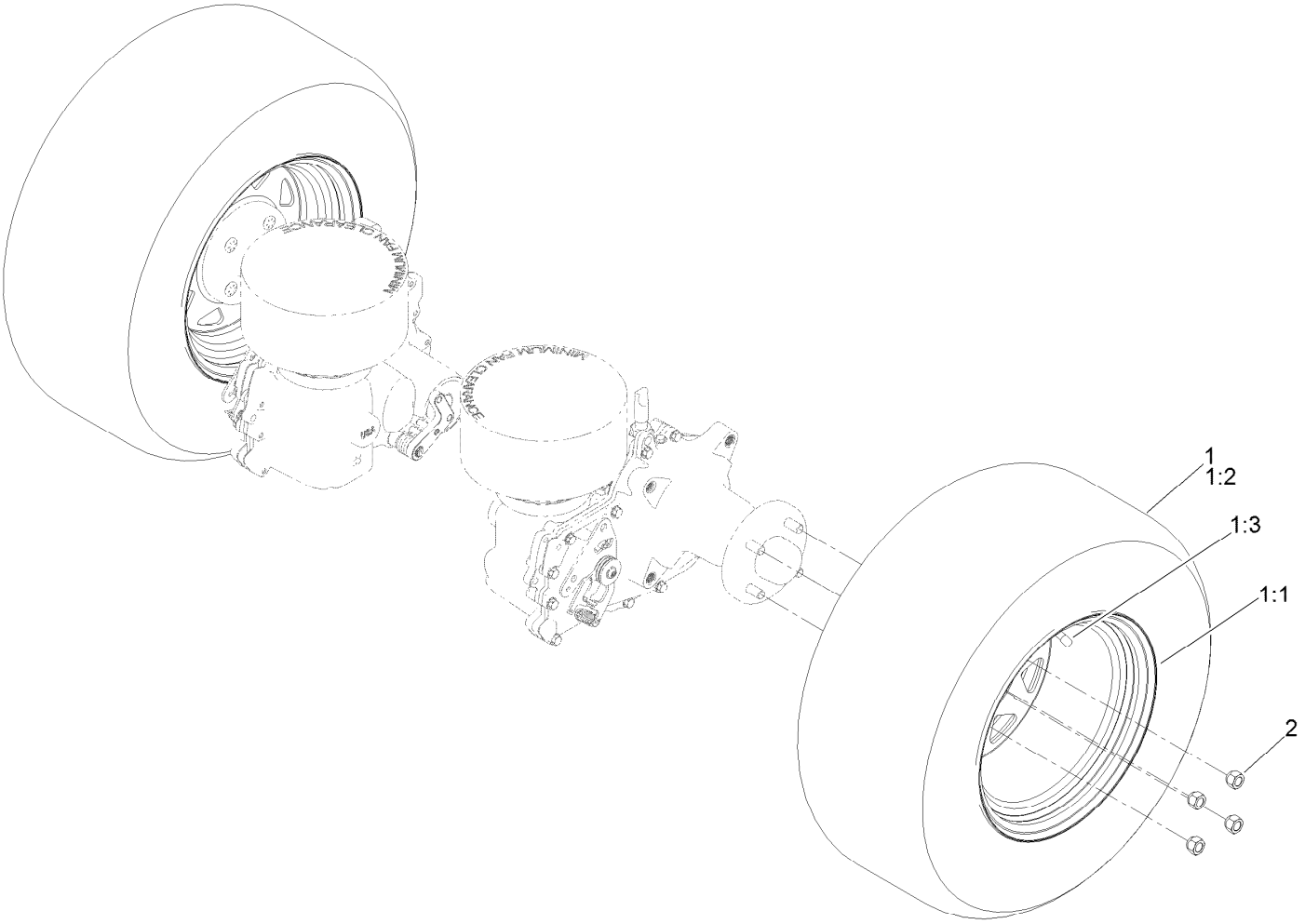

Rear Wheel Assembly (continued)

Ref.	Part Number	Qty.	Description
1	140-7959	2	Wheel And Tire ASM
1:1	140-7969	1	Wheel
1:2	140-7974	1	Tire
1:3	232-27	1	Stem-Valve
2	242-50	2	Nut-Lug

Electrical Assembly

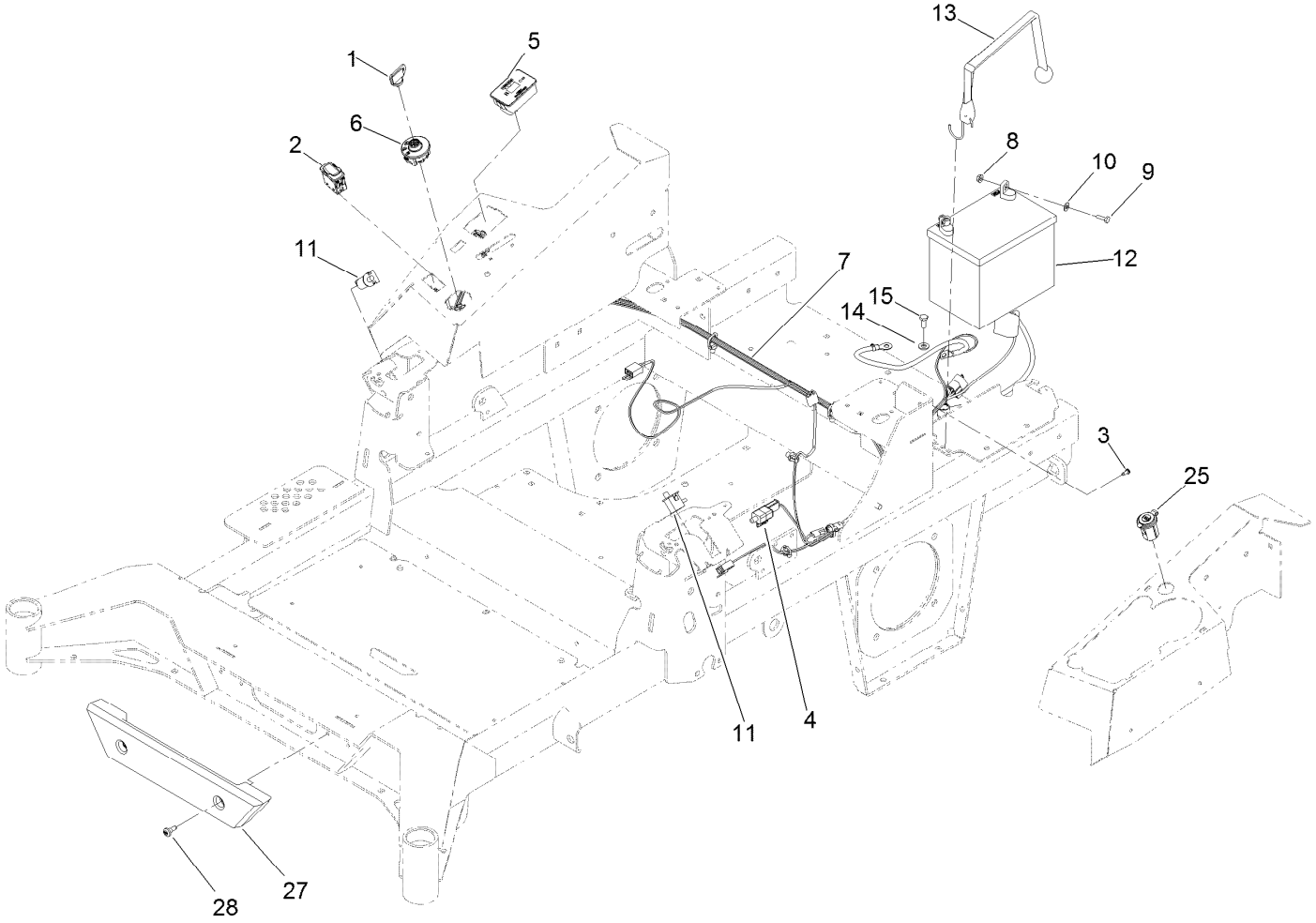

Electrical Assembly (continued)

Ref.	Part Number	Qty.	Description
1	1-603511	1	Keys-Ignition (Spare Pair)
1	63-8360	1	Key-Ignition
2	139-6368	1	Switch-Rocker, On-None-On
3	99-8445	1	Screw-HWH
4	110-6765	1	Switch
5	116-5609	1	Module ASM
6	137-4100	1	Switch-Ignition
7	139-8078	1	Harness-Wire
8	32128-33	2	Nut-HF
9	321-4	2	Screw-HH
10	3256-22	2	Washer-Flat
11	82-2190	2	Switch-Bail
12	104-8162	1	Battery
13	126-7627	1	Strap-Bungee
14	33094-00	1	Washer-Plain
15	33114-020	1	Screw-HH
25	140-7955	1	Port-Power, USB
27	140-4996	1	Bumper-Front
28	135-2015	2	Screw-Shoulder

Wire Harness Assembly No. 139-8078

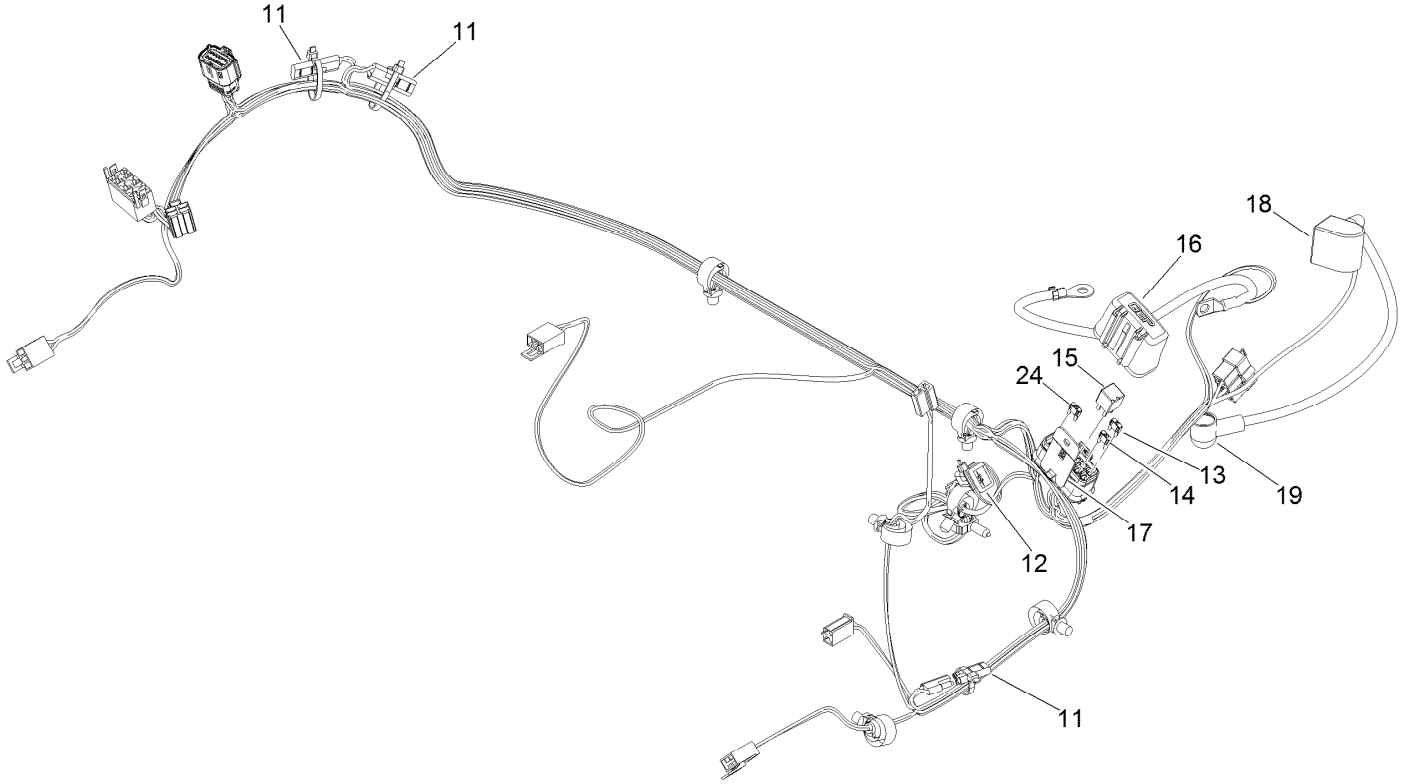

Wire Harness Assembly No. 139-8078 (continued)

Ref.	Part Number	Qty.	Description
11	116-0053	3	Cap-Plug
12	103-3895	1	Diode
13	121-8867	1	Fuse-Mini Blade, 15 Amp
14	121-8868	1	Fuse-Mini Blade, 20 Amp
15	126-3991	1	Relay-Micro
16	32180-176	1	Cover-Block, Fuse
17	32180-177	1	Clip-Mounting
18	126-8876	1	Insulator-Battery
19	1-543393	1	Insulator-Solenoid
24	121-8869	1	Fuse-Mini Blade, 25 Amp

Deck Lift Assembly

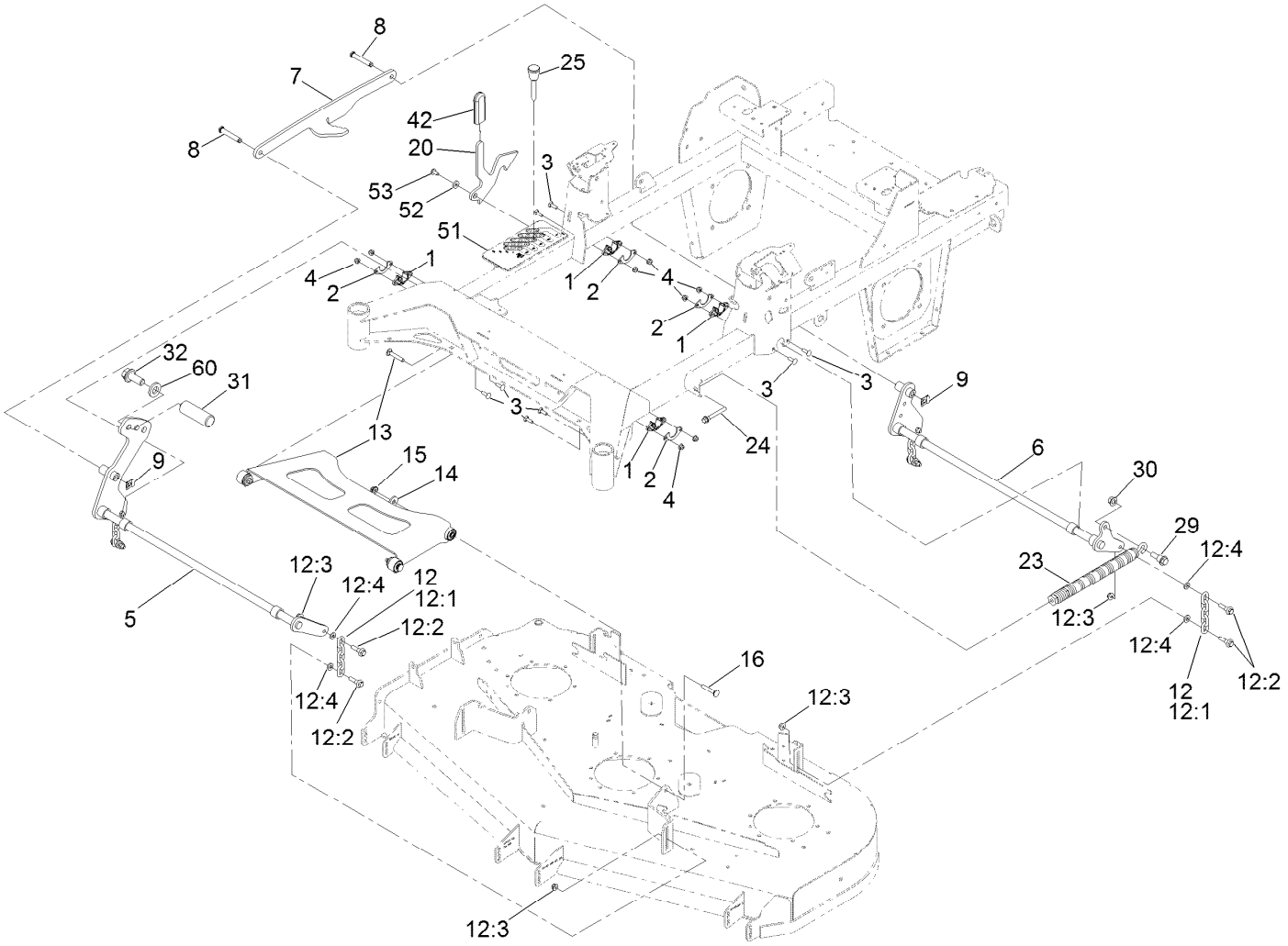

Deck Lift Assembly (continued)

Ref.	Part Number	Qty.	Description
1	115-5065	4	Bushing-Flange
2	116-2887	4	Gusset-Lift, Deck
3	3230-22	8	Screw-CARR
4	104-8300	8	Nut-HF, NI
5	139-8050-03	1	Front Deck Lift Shaft ASM
6	140-4975-03	1	Shaft-Lift, Deck
7	126-4639-03	1	Link-HOC
8	126-9181	2	Pin-Clevis
9	138-8491	2	Clip-Pin
12	126-8877	4	Deck Chain ASM
12:1	1-633447	1	Chain-Lift, Deck
12:2	130-0742	2	Bolt-Shoulder
12:3	104-8301	2	Nut-HF, NI
12:4	43-0940	2	Spacer
13	140-1179	1	Deck Strut W/ Bushings ASM

Ref.	Part Number	Qty.	Description
14	1-373034	2	Washer
15	109-6658	2	Nut-Flange, NI
16	3231-7	2	Screw-CARR
20	140-1249	1	Plate-Transport Lock
23	116-0886	1	Spring-Extension
24	92-7674	1	Bolt-Shoulder
25	126-5401	1	Pin-HOC
29	116-0780	1	Screw-Shoulder, HHF
30	99-5107	1	Nut-Lock
31	140-4959	1	Pedal-Foot Lift
32	3234-42	1	Screw-HHF
42	132-4749	1	Grip-Lever
51	139-6699	1	Decal-HOC
52	104-7658	1	Spacer
53	9266934	1	Screw
60	2844	1	Washer

Deck Strut Assembly No. 140-1179

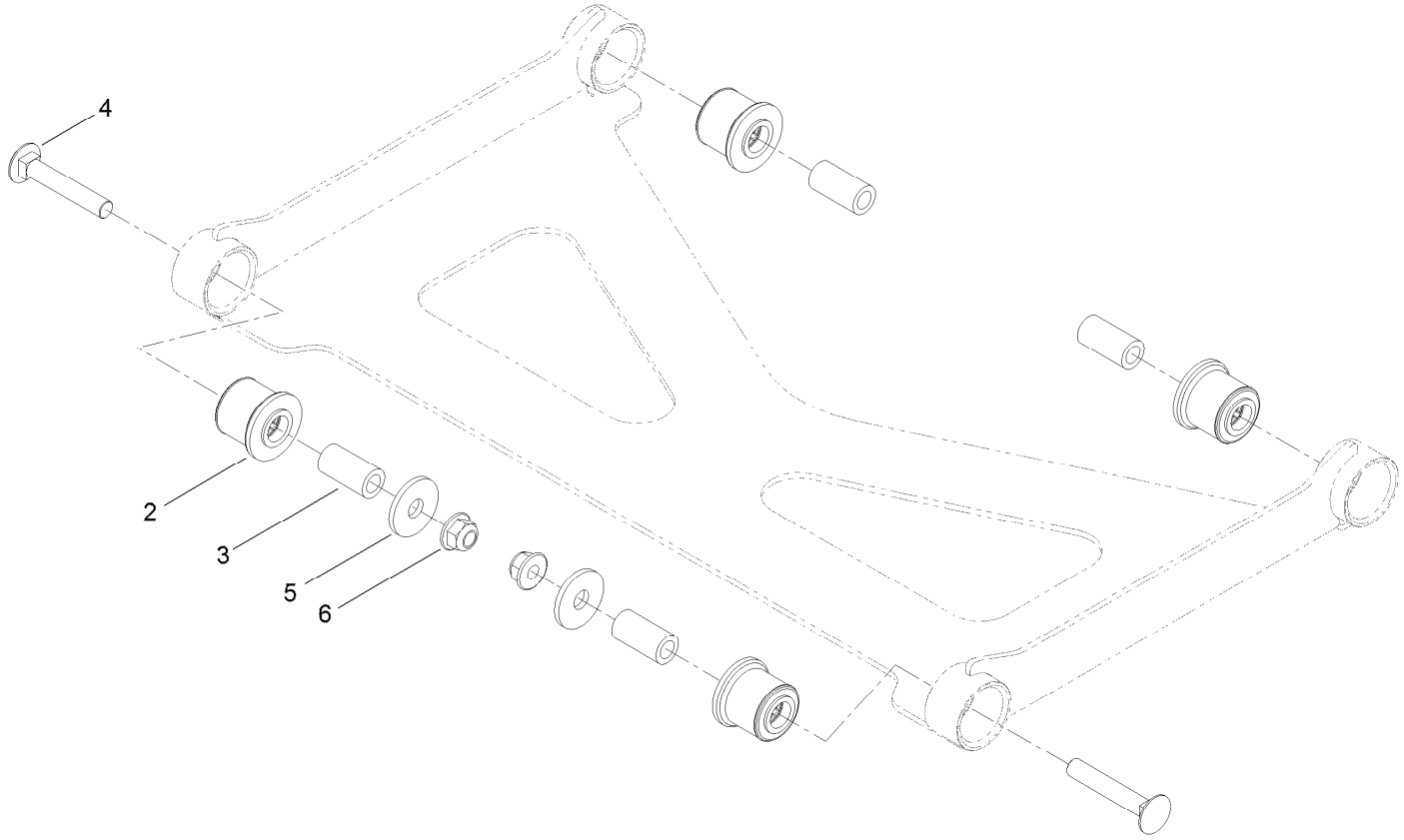

Deck Strut Assembly No. 140-1179 (continued)

Ref.	Part Number	Qty.	Description
2	126-8360	4	Bushing-Rubber, Suspension
3	108-6544	4	Spacer
4	3231-7	2	Screw-CARR
5	2844	2	Washer
6	104-8301	2	Nut-HF, NI

Engine, Clutch and Muffler Assembly

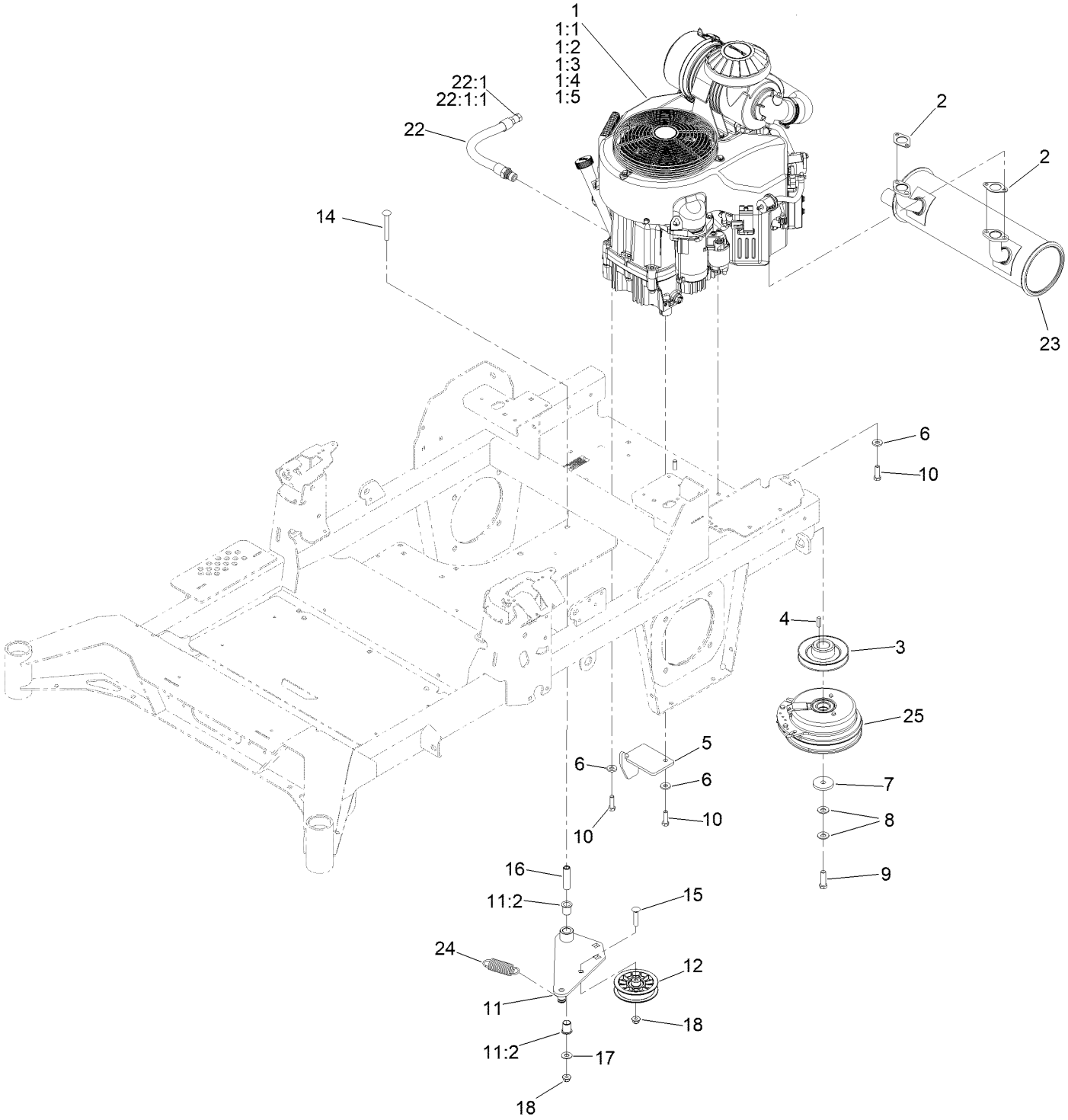

Engine, Clutch and Muffler Assembly (continued)

Ref.	Part Number	Qty.	Description
1		1	Engine-Kawasaki, Fx801V-S04-R ■▲
1:1	KW10761	1	Filter-Oil Kaw
1:2	119-5944	1	Element-Filter, Air (Outer)
1:3	119-5945	1	Element-Filter, Air (Inner)
1:4	142-6949	1	Filter-Fuel
1:5	92-2153	1	Plug-Spark
2	1-653313	2	Gasket-Exhaust
3	139-6702	1	Sheave, W/Hub
4	1-807259	1	Key
5	140-1190	1	Anchor-Clutch
6	98-5975	4	Washer-Belleville
7	109-6919	1	Washer-Plain
8	1-603610	2	Washer-Spring
9	109-9761	1	Screw-HH
10	323-7	4	Screw-HH
11	144-2671	1	Idler Arm ASM
11:2	138-2573	2	Bushing-Flange
12	116-2456	1	Pulley-Flat Idler
14	3231-42	1	Screw-CARR
15	3231-29	1	Screw-CARR
16	139-6690	1	Bushing, Idler Pivot
17	3256-4	1	Washer-Flat
18	104-8301	2	Nut-HF, NI
22	116-4924	1	Engine Oil Drain Hose ASM
22:1	353-508	1	Plug-HH ●
22:1:1	237-42	1	O-Ring
23	139-1079	1	Muffler
24	1-653331	1	Spring-Idler
25	116-1604	1	Clutch

● Torque to 24-26 ft-lb
▲ Obtain parts from www.kawpower.com
■ Not serviced separately

Decal Assembly

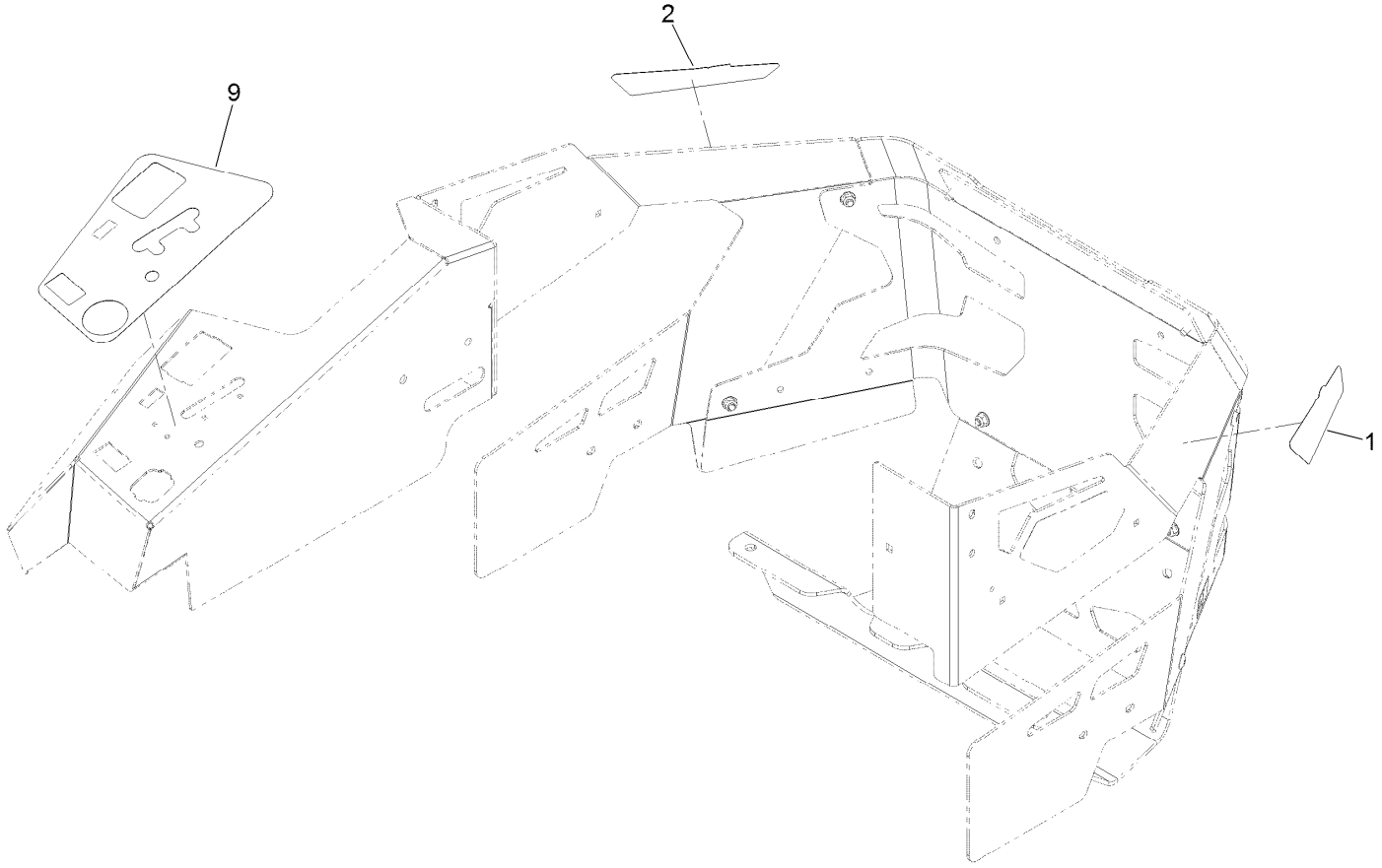

Decal Assembly (continued)

Ref.	Part Number	Qty.	Description
1	144-0438	1	Decal - Pro
2	144-0439	1	Decal - Pro
9	144-0405	1	Decal-Panel, Control

Deck Assembly

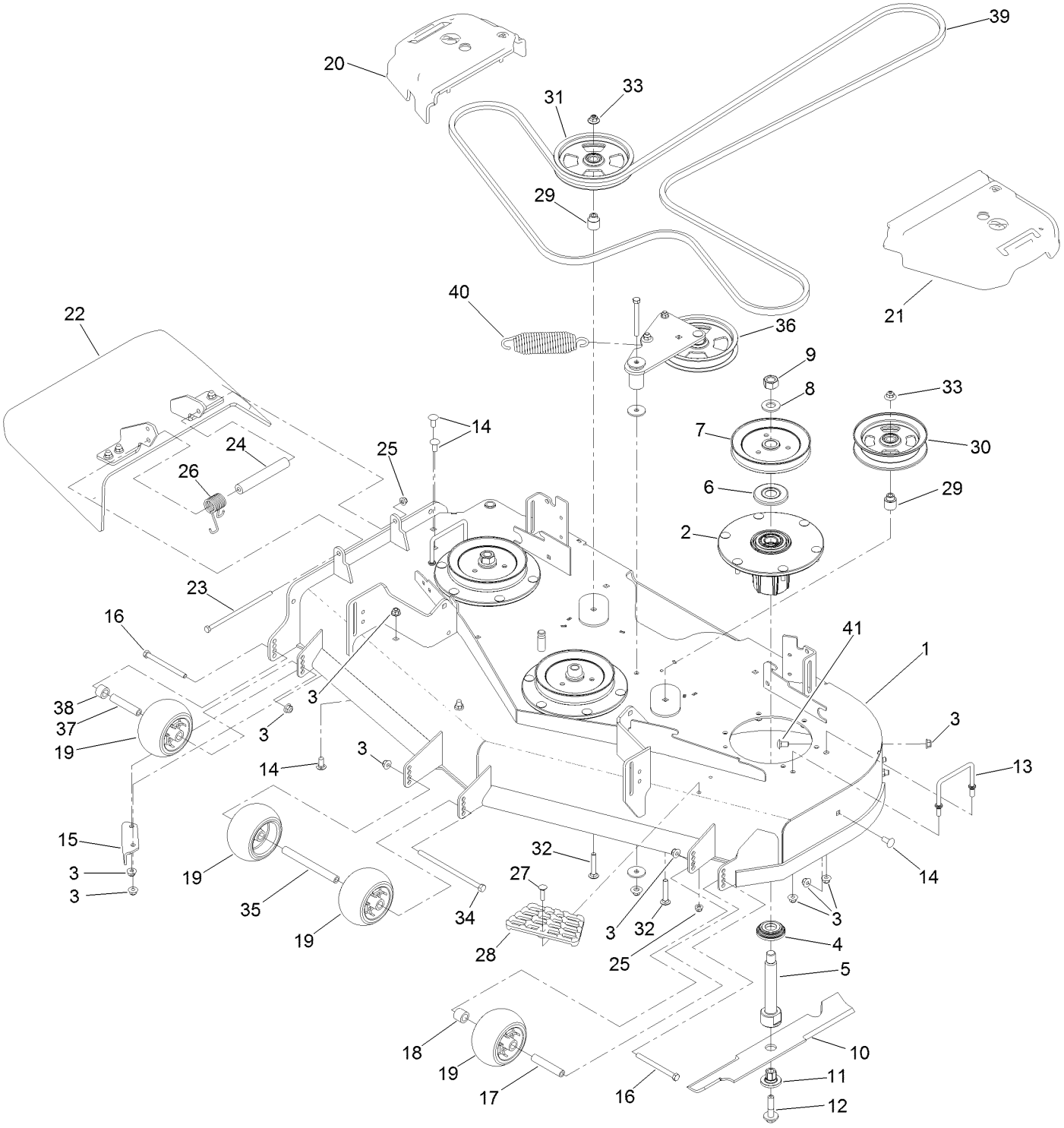

Deck Assembly (continued)

Ref.	Part Number	Qty.	Description
1	144-6587	1	Deck Decal ASM
2	137-9780	3	Spindle ASM
3	104-8301	34	Nut-HF, NI
4	137-9784	3	Guard-Bottom
5	138-6045	3	Shaft-Spindle
6	103-1330	3	Guard-Bearing, Top
7	138-6058	3	Sheave-Blade Drive 6.50
8	103-2802	3	Washer
9	116-7306	3	Nut-Hex
10	140-1242	3	Blade-Flow, High
11	137-9787	3	Bushing-Hex
12	109-9220	3	Screw-Sems
13	109-6982	2	Wireform-Cover
14	3231-27	6	Screw-CARR
15	107-8541-01	1	Baffle-Discharge
16	323-23	2	Screw-HH
17	98-7912	1	Tube-Spanner
18	98-7913	1	Tube-Spacer
19	1-603299	4	Roller-Scalp, Anti
20	109-6935	1	Cover-Belt, RH
21	109-6936	1	Cover-Belt, LH

Ref.	Part Number	Qty.	Description
22	144-2635	1	Rubber Deflector ASM
23	322-50	1	Screw-HH
24	105-4622	1	Spacer
25	104-8300	2	Nut-HF, NI
26	108-4052	1	Spring-Torsion
27	3230-3	1	Screw-CARR
28	126-4781-03	1	Step-Deck
29	139-8061	2	Bushing, Idler
30	132-9425	1	Pulley-Idler, Flat
31	132-9424	1	Pulley-Idler, Flat
32	3231-7	2	Screw-CARR
33	109-6658	2	Nut-Flange, NI
34	108-5388	1	Screw-HH
35	98-5967	1	Spacer-Wheel
36	139-1087	1	Idler Arm ASM
37	133-2129	1	Tube-Shafting
38	133-2128	1	Tube-Spacer
39	144-0356	1	Belt-V
40	116-6317	1	Spring-Extension
41	3231-21	3	Screw-CARR

Deck Decal Assembly No. 144-6587

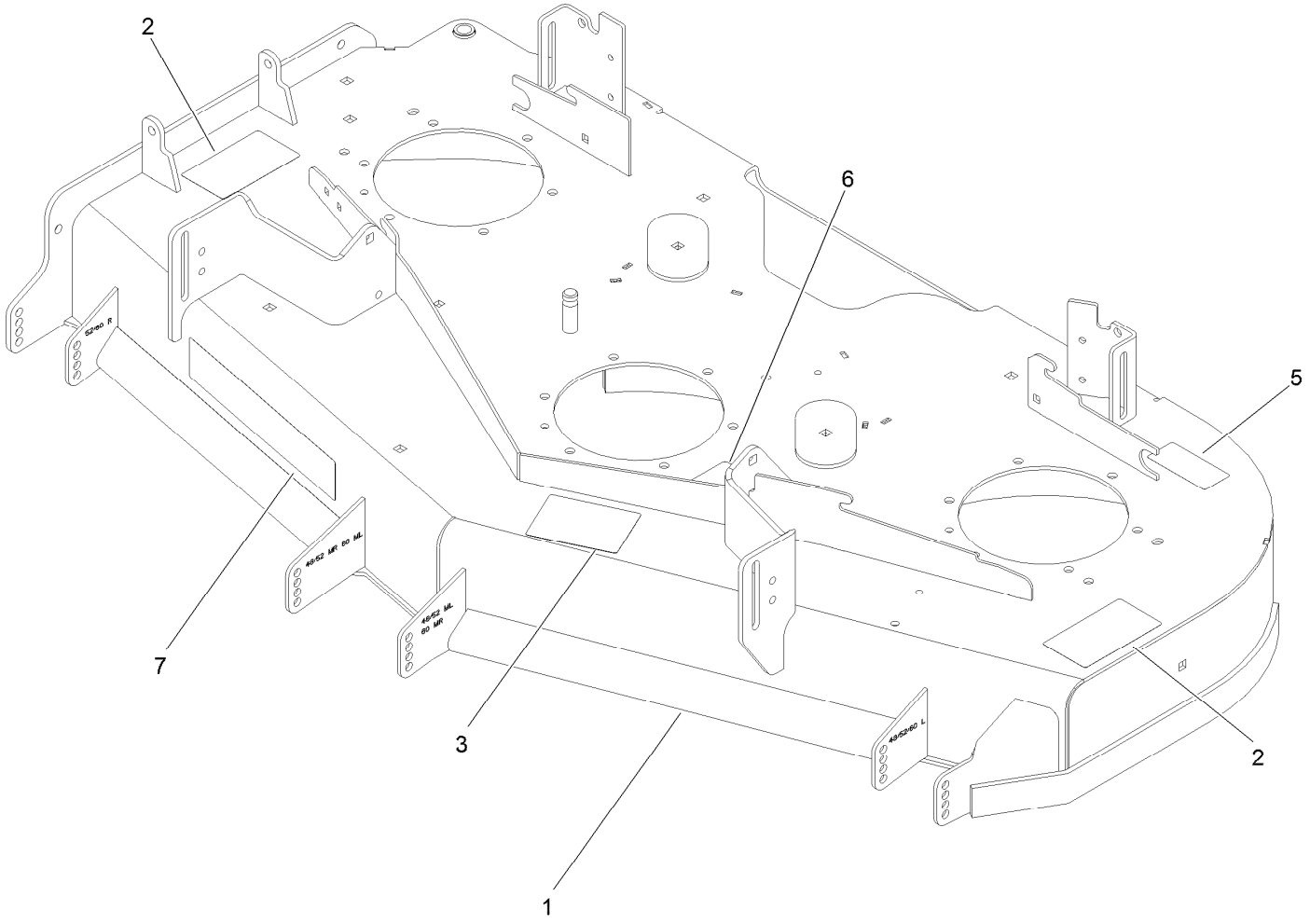

Deck Decal Assembly No. 144-6587 (continued)

Ref.	Part Number	Qty.	Description
1		1	Deck ASM W/Decals 52 ●
2	117-3848	2	Decal-Danger
3	127-0326	1	Decal-Scalp, Anti
5	116-8283	1	Decal-Torque, Bolt
6	109-6035	1	Decal-Routing, Belt
7	107-1618	1	Decal

● Not serviced separately

Spindle Assembly No. 137-9780

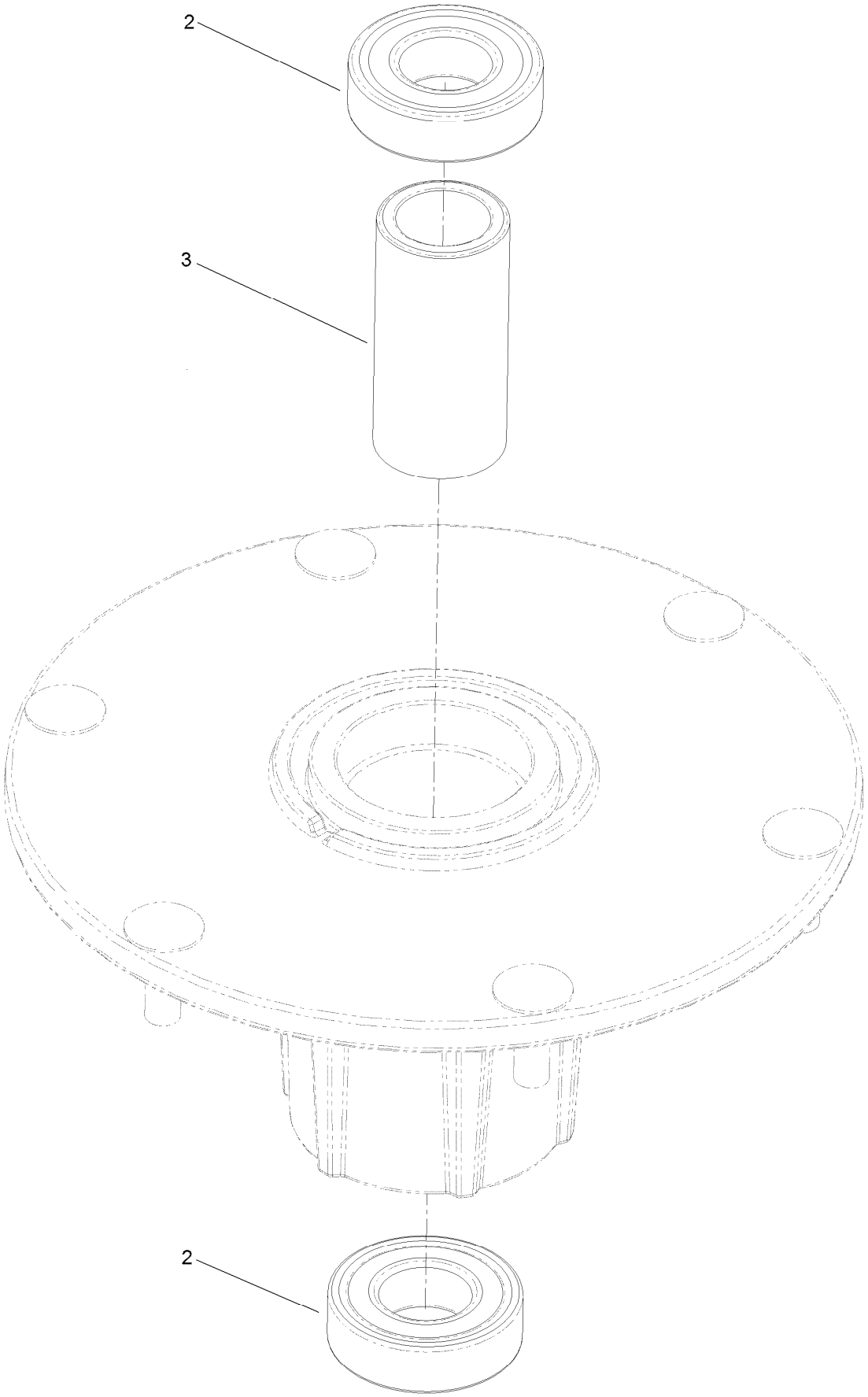

Spindle Assembly No. 137-9780 (continued)

Ref.	Part Number	Qty.	Description
2	116-0720	2	Bearing-Ball
3	138-6042	1	Spacer-Bearing

Deflector Assembly No. 144-2635

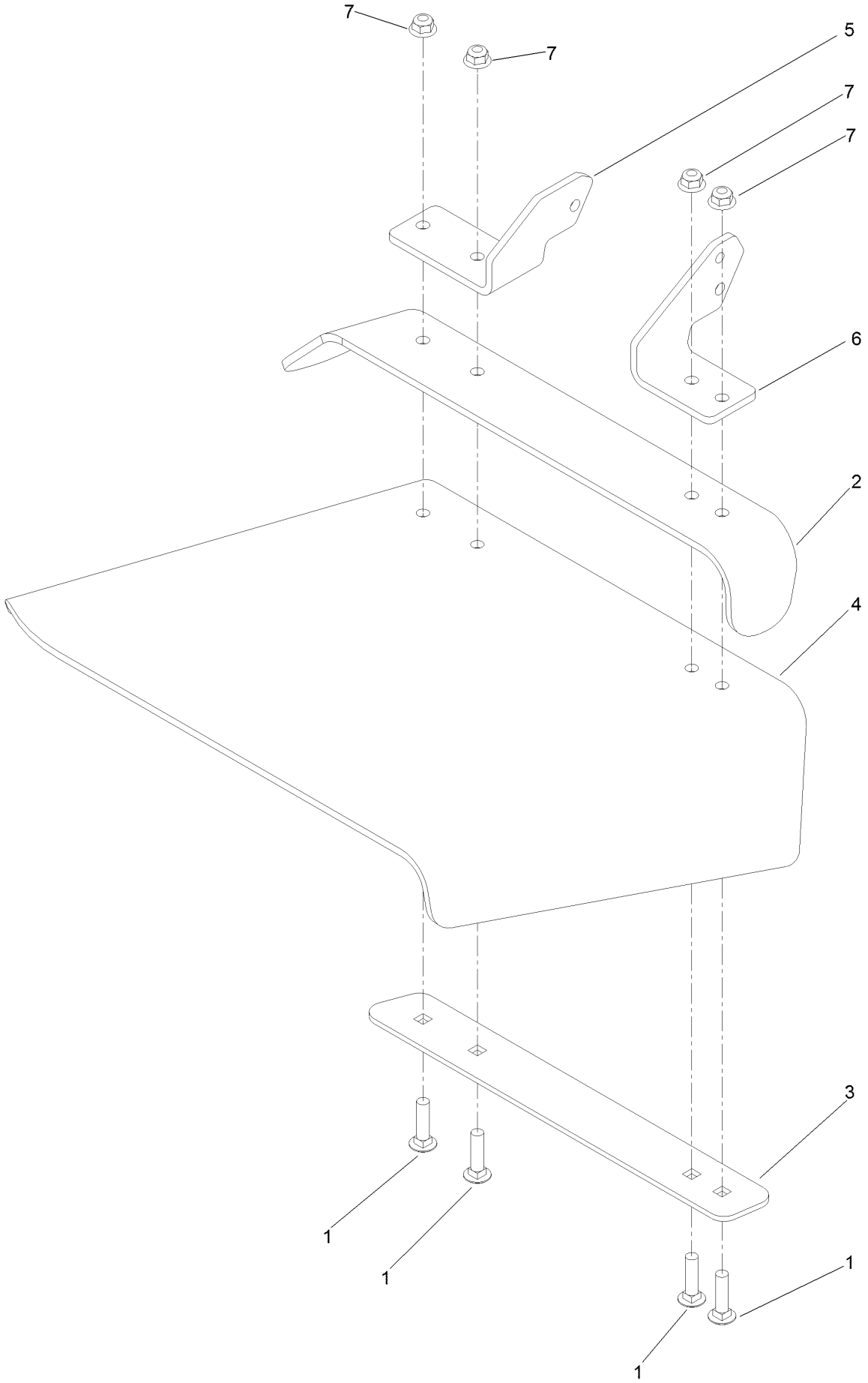

Deflector Assembly No. 144-2635 (continued)

Ref.	Part Number	Qty.	Description
1	3231-4	4	Screw-CARR
2	106-3246-01	1	Deflector
3	106-3248-03	1	Strap-Discharge
4	139-8114	1	Deflector-Deck, Rubber
5	108-4059-01	1	Plate-Hinge, Rear
6	106-3253-01	1	Plate-Hinge, Front
7	104-8301	4	Nut-HF, NI

Idler Arm Assembly No. 139-1087

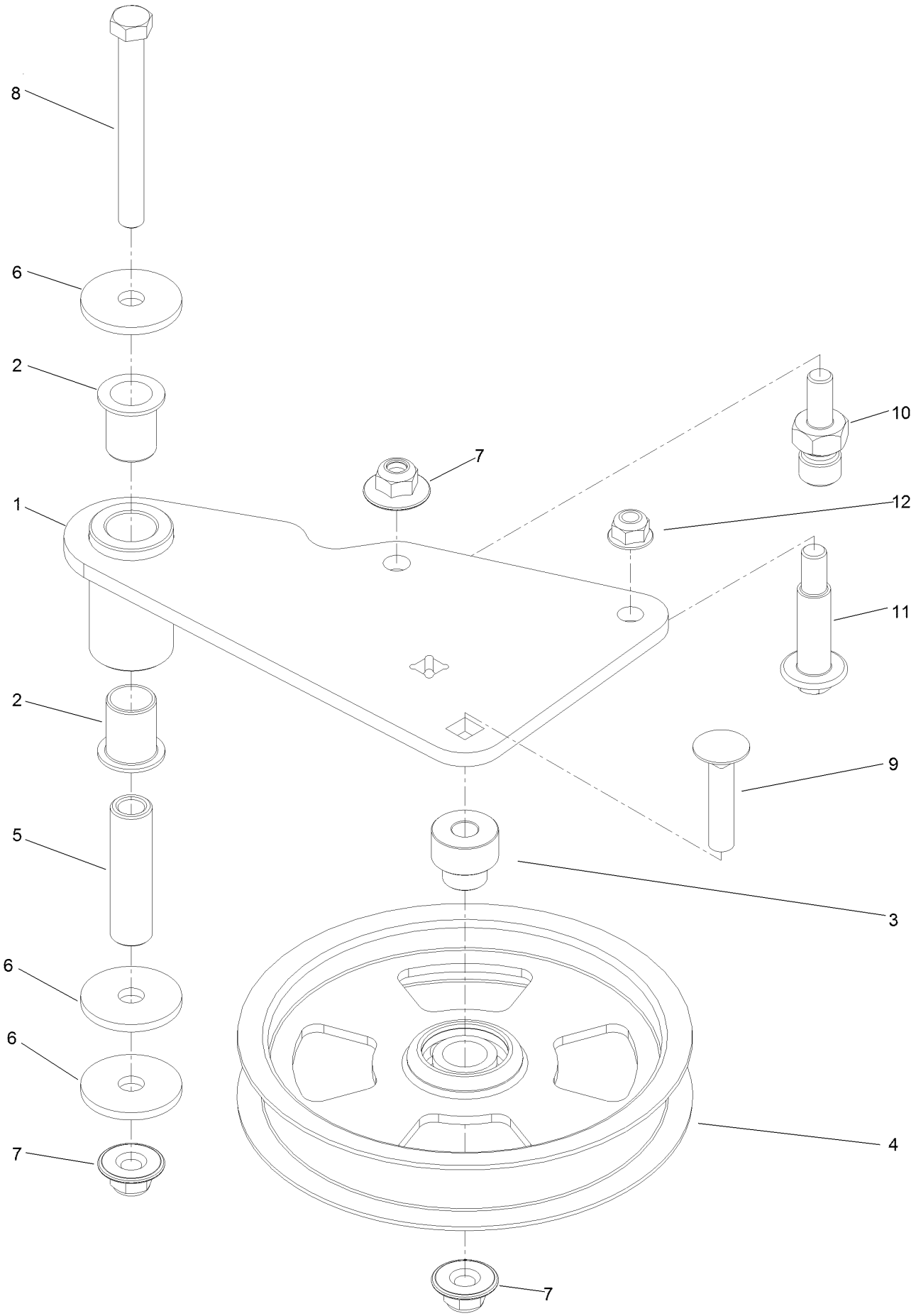

Idler Arm Assembly No. 139-1087 (continued)

Ref.	Part Number	Qty.	Description
1	139-1086	1	Idler Arm ASM
2	138-2573	2	Bushing-Flange
3	139-8060	1	Bushing, Idler
4	132-9424	1	Pulley-Idler, Flat
5	139-6690	1	Bushing, Idler Pivot
6	1-213069	3	Washer
7	109-6658	3	Nut-Flange, NI
8	323-15	1	Screw-HH
9	3231-5	1	Screw-CARR
10	132-4729	1	Anchor-Spring, Short
11	136-9028	1	Bolt-Shoulder, HWH
12	104-8301	1	Nut-HF, NI

Attachments and Accessories

For 74002 52in Z Master 4000 Series Riding Mower

Product Name	Model/Part
Hypr-Oil 500 (quart)	114-4713
Hypr-Oil 500 (gallon)	114-4714
Hypr-Oil 500-5 (5 gallon)	114-4715
Striper Kit	126-7882
Jack Kit	127-6666
Recycler Kit	139-6653
Blade-18.00 High Flow	140-1242
Blade-18.00 Medium Flow	140-4856
Blade-18.00 Low Flow	140-4857
Blade-18.00 Atomic	140-4858
Blade-18.00 Recycler	140-4859
6 Pack-Blade, 18.00 High Flow	140-4882
6 Pack-Blade, 18.00 Med Flow	140-4883
6 Pack-Blade, 18.00 Low Flow	140-4884
6 Pack-Blade, 18.00 Atomic	140-4885
6 Pack-Blade, 18.00 Recycler	140-4886
Base Light Kit-4000 Series	144-0389
Trimmer Mount	144-2665
Jack Mount Kit	144-2676
Hardtop Sun Canopy	144-3719
52" Chute Gate Kit [4000]	144-6571
Asm-Voodoo Trac 24x10.5-12 [os -2.25]	144-6987
Handle Extension Kit	145-3615
Kit-Red Electric Deck Lift	147-1660
Bucket Mount Kit, Z Master 2000 or 4000 Series Riding Mower	147-6345
Universal Mount Kit, Z Master 2000 or 4000 Series Riding Mower	147-6346
Spark Arrestor Screen	75-6880
Z 4000 Bagger Kit	78463
Z 4000 52in Completion Kit	78465

Notes:

Notes:

Notes:

TORO®

Count on it.