Form No. 3329-488

TORO®

924, 1028, and 1332 Power Shift®

Snowthrower

Model No. 38079—240000001 and Up
Model No. 38559—240000001 and Up
Model No. 38087—240000001 and Up

Operator's Manual

CE

Original Instructions (GB)

This spark ignition system complies with Canadian ICES-002.

Ce système d'allumage par étincelle de véhicule est conforme à la norme NMB-002 du Canada.

The enclosed Engine Owner's Manual is supplied for information regarding The U.S. Environmental Protection Agency (EPA) and the California Emission Control Regulation of emission systems, maintenance and warranty.

Keep this engine Owner's Manual with your unit. Should this engine Owner's Manual become damaged or illegible, replace immediately. Replacements may be ordered through the engine manufacturer.

Contents

	Page
Introduction	2
Safety	3
Safe Operating Practices	3
Toro Snowthrower Safety	4
Sound Pressure	5
Sound Power	5
Vibration	5
Safety and Instruction Decals	6
Assembly	8
Loose Parts	8
Installing the Auger/Impeller Housing	9
Installing the Shift Rod	10
Installing the Discharge Chute	10
Installing the Chute Control Gear	11
Installing the Skids	11
Before Starting	12
Filling the Engine Crankcase with Oil	12
Filling the Fuel Tank with Gasoline	12
Checking the Tire Pressure	13
Reviewing the Maintenance Schedule	13
Operation	13
Operating Controls	13
Removing the Carburetor Heater Box	14
Installing the Carburetor Heater Box	15
Starting the Engine	15
Stopping the Engine	16
Operating the Power Shift Feature	16
Freewheeling or Self-propel Drive	16
Adjusting the Headlight	17
Snowthrowing Tips	17
Maintenance	18
Recommended Maintenance Schedule	18
Checking the Engine Oil Level	19
Checking the Auger Gearbox Oil Level	19
Adjusting the Skids and the Scraper	20
Adjusting the Traction Drive Belt	20
Adjusting the Auger/Impeller Drive Belt	21
Replacing the Drive Belts	22
Changing the Engine Oil	23
Lubricating the Drive Chain	23
Adjusting the Drive Chain	23
Replacing the Spark Plug	24
Emptying the Fuel Tank	24
Storage	25
Preparing the Fuel System	25
Preparing the Engine	25
Preparing the Snowthrower	25
Troubleshooting	26

Introduction

Read this manual carefully to learn how to operate and maintain your product properly. The information in this manual can help you and others avoid injury and product damage. Although Toro designs and produces safe products, you are responsible for operating the product properly and safely.

Whenever you need service, genuine Toro parts, or additional information, contact an Authorized Service Dealer or Toro Customer Service and have the model and serial numbers of your product ready. Figure 1 illustrates the location of the model and serial numbers on the product.

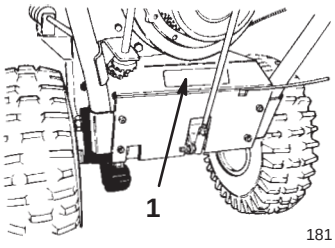

Figure 1

1. Location of the model and serial numbers

Write the product model and serial numbers in the space below:

Model No. _____

Serial No. _____

© 2003 by The Toro Company
8111 Lyndale Avenue South
Bloomington, MN 55420-1196

All Rights Reserved

Printed in the USA

This manual identifies potential hazards and has special safety messages that help you and others avoid personal injury and even death. ***Danger***, ***Warning***, and ***Caution*** are signal words used to identify the level of hazard. However, regardless of the hazard, be extremely careful.

Danger signals an extreme hazard that **will** cause serious injury or death if you do not follow the recommended precautions.

Warning signals a hazard that **may** cause serious injury or death if you do not follow the recommended precautions.

Caution signals a hazard that may cause minor or moderate injury if you do not follow the recommended precautions.

This manual uses 2 other words to highlight information. **Important** calls attention to special mechanical information and **Note:** emphasizes general information worthy of special attention.

Safety

This 2-stage snowthrower meets or exceeds the ISO 8437 standard in effect at the time of production.

To ensure maximum safety and best performance, and to gain knowledge of the product, it is essential that you and any other operator of the snowthrower read and understand the contents of this manual before the engine is ever started.

⚠ This is the safety alert symbol. It is used to alert you to potential personal injury hazards. Obey all safety messages that follow this symbol to avoid possible injury or death.

Improperly using or maintaining this snowthrower could result in injury or death. To reduce this potential, comply with the following safety instructions.

Safe Operating Practices

The following instructions have been adapted from the ANSI/OPEI B71.3–1995 standard and the ISO 8437:1989 standard. Information or terminology specific to Toro snowthrowers is enclosed in parenthesis.

Training

- Read the operator's manual carefully. Be thoroughly familiar with the controls and the proper use of the equipment. Know how to stop the unit and disengage the controls quickly.
- Never allow children to operate the snowthrower. Never allow adults to operate the snowthrower without proper instruction.
- Keep the area of operation clear of all persons (particularly small children) and pets.
- Exercise caution to avoid slipping or falling, especially when operating the snowthrower in reverse.

Preparation

- Thoroughly inspect the area where you will use the snowthrower. Remove all doormats, sleds, boards, wires, and other foreign objects.
- Before starting the engine, disengage all clutches. For Power Shift® models, shift the snowthrower into neutral as well.
- Do not operate the snowthrower without wearing adequate winter garments. Wear footwear that will improve your footing on slippery surfaces.
- Handle fuel with care; it is highly flammable.
  - Use an approved fuel container.
  - Never add fuel to a running or hot engine.
  - Fill the fuel tank outdoors with extreme care. Never fill the fuel tank indoors.
  - Replace the fuel tank cap securely and wipe up any spilled fuel.
- Use only the power cord supplied with the snowthrower and a receptacle appropriate for use with the power cord for electric-starting motors.
- Adjust the auger housing height to clear gravel or crushed rock surface.
- Never attempt to make any adjustments while the engine is running, except where specifically recommended by Toro.
- Let the engine and the snowthrower adjust to the outdoor temperature before starting to clear snow.
- Operating any powered machine can result in foreign objects being thrown into the eyes. Always wear safety glasses or eye shields while operating, adjusting, or repairing the snowthrower.

Operation

- Do not put hands or feet near or under rotating parts. Keep clear of the discharge opening at all times.
- Exercise extreme caution when operating on or crossing gravel drives, walks, or roads. Stay alert for hidden hazards or traffic.
- After striking a foreign object, stop the engine, remove the wire from the spark plug, thoroughly inspect the snowthrower for any damage, and repair the damage before operating the snowthrower.
- If the unit should start to vibrate abnormally, stop the engine and check immediately for the cause. Vibration is generally a warning of trouble.

- Stop the engine whenever you leave the operating position, before unclogging the auger/impeller housing or discharge chute, and when making any repairs, adjustments, or inspections.
- When cleaning, repairing, or inspecting, make certain that the auger/impeller and all moving parts have stopped. Disconnect the spark-plug wire, and keep the wire away from the spark plug to prevent someone from accidentally starting the engine.
- Do not run the engine indoors, except when starting it and for moving the snowthrower in or out of the building. Open the outside doors; exhaust fumes are dangerous.
- Do not clear snow across the face of slopes. Exercise extreme caution when changing direction on slopes. Do not attempt to clear steep slopes.
- Never operate the snowthrower without proper guards or other safety devices in place.
- Never operate the snowthrower near glass enclosures, automobiles, window wells, and drop-offs without properly adjusting the snow discharge angle. Keep children and pets away.
- Do not overload the machine capacity by attempting to clear snow at too fast a rate.
- Never operate the machine at high transport speeds on slippery surfaces. Look behind and use care when moving in reverse.
- Never direct the discharge at bystanders or allow anyone in front of the unit.
- Disengage the power to the auger/impeller when the snowthrower is being transported or when not in use.
- Use only attachments and accessories approved by Toro, such as wheel weights, counterweights, and cabs. (Contact your Authorized Service Dealer for accessories available for your snowthrower.)
- Never operate the snowthrower without good visibility or light. Always be sure of your footing, and keep a firm hold on the handle. Walk; never run.

Maintenance and Storage

- Check all fasteners at frequent intervals for proper tightness to be sure that the equipment is in safe working condition.
- Never store the machine with fuel in the fuel tank inside a building where ignition sources are present, such as hot water and space heaters and clothes dryers. Allow the engine to cool before storing in any enclosure.
- Always refer to this operator's manual for important details if the snowthrower is to be stored for an extended period.
- Maintain or replace safety and instruction labels when necessary.
- Run the engine run for a few minutes after clearing the snow to prevent the auger/impeller from freezing.

Toro Snowthrower Safety

The following list contains safety information specific to Toro products or other safety information that you must know.

- **Rotating auger/impeller can cut off or injure fingers or hands.** Stay behind the handles and away from the discharge opening while operating the snowthrower. **Keep your face, hands, feet, and any other part of your body or clothing away from moving or rotating parts.**
- Before adjusting, cleaning, repairing, and inspecting the snowthrower, and before unclogging the discharge chute, **stop the engine, remove the key, and wait for all moving parts to stop**. Also, disconnect the wire from the spark plug and keep it away from the spark plug to prevent someone from accidentally starting the engine.
- Use a stick, **not your hands**, to remove obstructions from the discharge chute.
- **Before** leaving the operating position, stop the engine, remove the key, and wait for all moving parts to stop.
- Do not wear loose-fitting clothing that could get caught in moving parts.
- If a shield, safety device, or decal is damaged, illegible, or lost, repair or replace it before beginning operation. Also, tighten any loose fasteners.
- **Do not** smoke while handling gasoline.
- When operating the snowthrower on slopes, use the lower gear. For Power Shift® snowthrowers, use the rear wheel position.
- **Do not** use the snowthrower on a roof.
- Do not touch the engine while it is running or soon after it has stopped because the engine may be hot enough to cause a burn. Do not add oil or check the oil level in the crankcase while the engine is running.
- Perform only those maintenance instructions described in this manual. Before performing any maintenance, service, or adjustment, stop the engine, remove the key and disconnect the wire from the spark plug. Keeping the wire away from the spark plug to prevent someone from accidentally starting the engine. If major repairs are ever needed, contact your Authorized Service Dealer.
- Do not change the governor settings on the engine.

- When storing the snowthrower for more than 30 days, drain the fuel from the fuel tank to prevent a potential hazard. Store fuel in an approved fuel container. Remove the key from the ignition switch before storing the snowthrower.
- To ensure the best performance and safety, purchase only genuine Toro replacement parts and accessories.

Sound Pressure

This unit has a maximum sound pressure level at the operator's ear of 91 dBA, based on measurements of identical machines per Directive 98/37/EC.

Sound Power

This unit has a guaranteed sound power level of 110 dBA, based on measurements of identical machines per Directive 2000/14/EC.

Vibration

This unit does not exceed a hand/arm vibration level of 13.8 m/s^2 (model 38079) or 16.2 m/s^2 (models 38559 and 38087), based on measurements of identical machines per Directive 98/37/EC.

Before Operating

Read and understand the contents of this manual before operating the snowthrower. Become familiar with all controls and know how to stop the engine quickly.

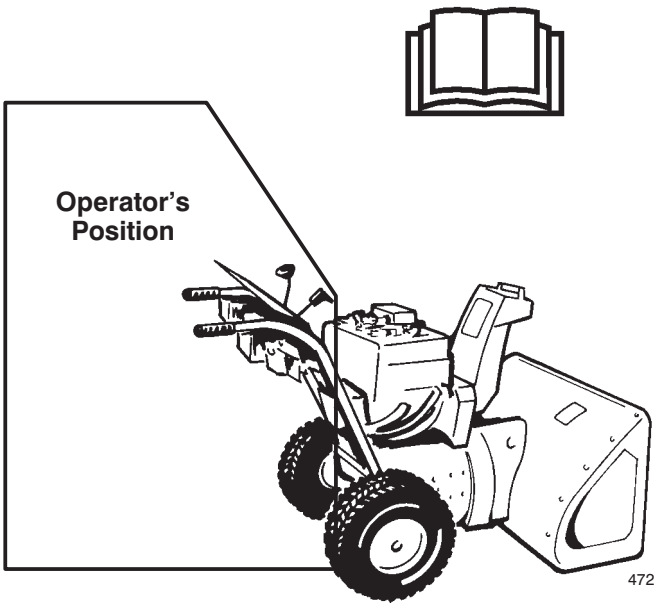

Caution: Improper use may result in loss of fingers, hands, or feet.

There is a high-speed impeller within two inches of the opening.

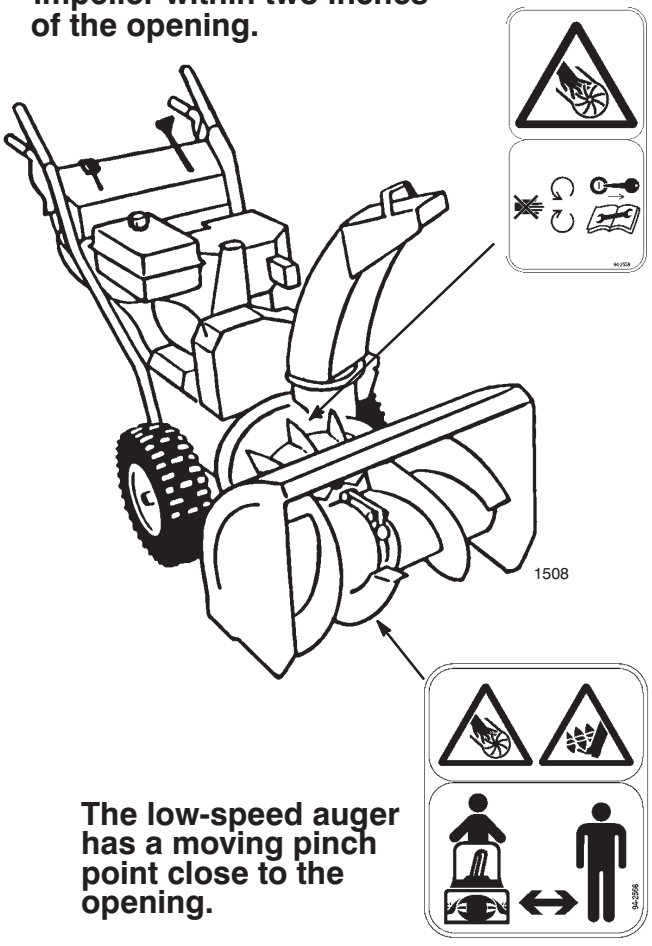

The low-speed auger has a moving pinch point close to the opening.

Safety and Instruction Decals

Safety decals and instructions are easily visible to the operator and are located near any area of potential danger. Replace any decal that is damaged or lost.

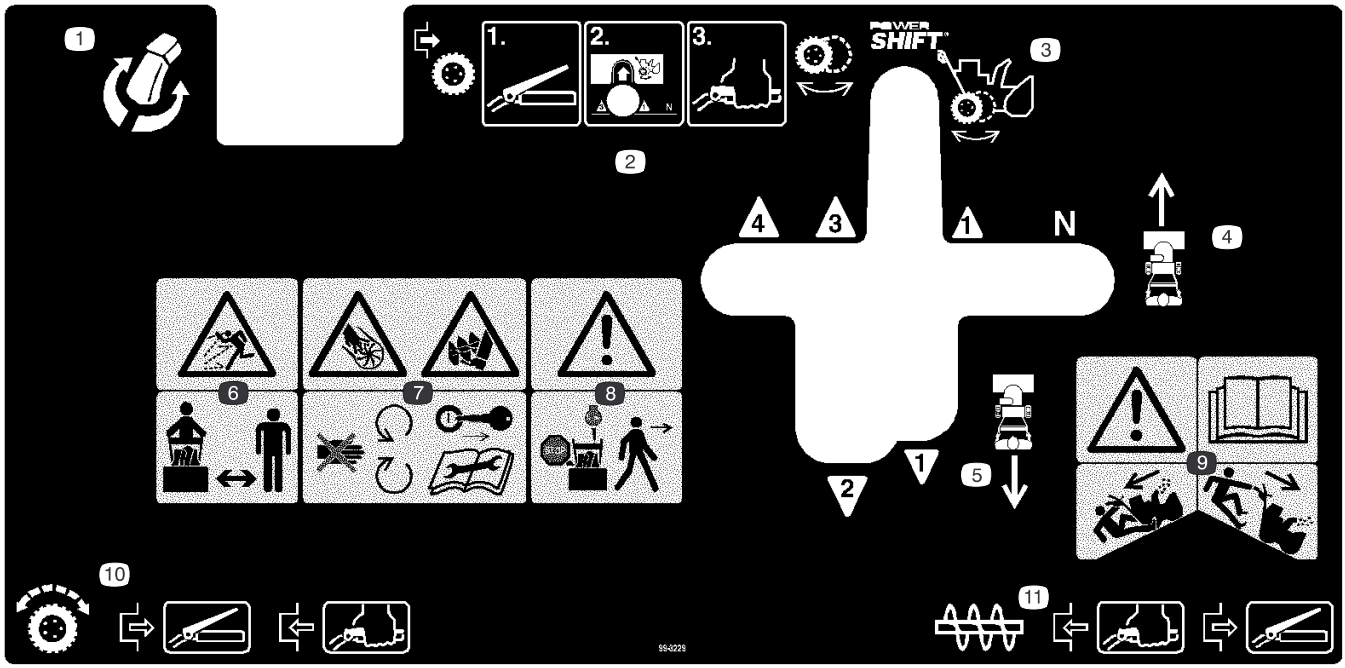

99-3229

1. Discharge chute control
2. To disengage the traction drive and change the wheel position, release the lever, move the shift control to the Power Shift position, and squeeze the lever.
3. Power Shift control
4. Forward machine speeds
5. Reverse machine speeds
6. Thrown object hazard—keep bystanders a safe distance from the machine.
7. Cutting/dismemberment hazard, impeller and auger—stay away from moving parts; remove the ignition key and read the instructions before servicing or performing maintenance.
8. Warning—stop the engine before leaving the machine.
9. Warning—going up or down steep slopes can cause you to slip and loose control; read the *Operator's Manual*.
10. Traction drive control—release the lever to disengage and squeeze the lever to engage.
11. Auger control—squeeze the lever to engage and release the lever to disengage.



94-2559

1. Cutting/dismemberment hazard, impeller—stay away from moving parts; remove the ignition key and read the instructions before servicing or performing maintenance.

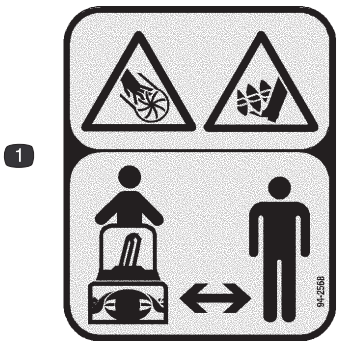

94-2568

1. Cutting/dismemberment hazard, impeller and auger—keep bystanders a safe distance from the machine.

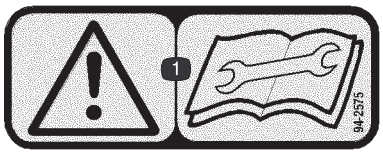

94-2575

1. Warning—read the instructions before servicing or performing maintenance.



Tecumseh Part No. 36501

1. Primer



Tecumseh Part No. 37119

1. Warning—hot surface; do not touch

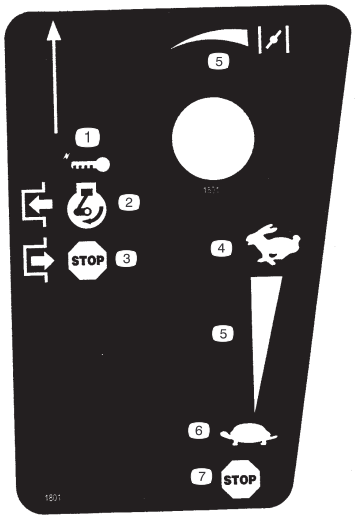

Tecumseh Part No. 37226

1. Key ignition
2. Engage to start the engine
3. Disengage to stop the engine
4. Fast
5. Increasing scale
6. Slow
7. Stop the engine

Assembly

Note: Determine the left and right sides of the machine from the normal operating position.

Loose Parts

DESCRIPTION	QTY.	USE
Flange-head bolts—3/4 inch	6	Installing the auger/impeller housing
Lower belt cover	1	
Flange-head bolts—1/2 inch	5	
Cable cover	1	
Shift rod	1	Installing the shift rod
Locknuts	2	
Discharge chute	1	Installing the discharge chute
Worm gear	1	Installing the chute control gear
Gear bracket	1	
Carriage bolt	1	
Flat washer	1	
Locknut	1	
Skids	2	Installing the skids
Flange-head bolts—3/4 inch	2	
Flat washers	2	
Locknuts	3	
Ignition key	1	Starting and stopping the engine

Installing the Auger/Impeller Housing

1. Remove the 2 flange-head bolts that secure the idler pulley assembly to the engine frame, and remove the idler pulley assembly (Fig. 2).

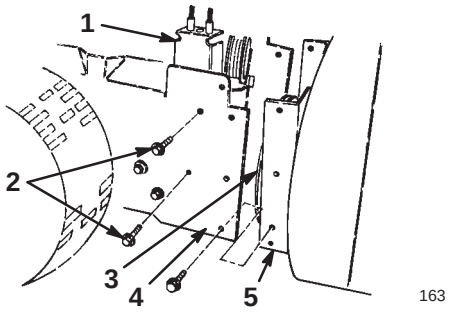

Figure 2

1. Idler pulley assembly
2. Flange-head bolts
3. Impeller pulley
4. Engine frame
5. Auger housing

Important Remove the idler pulley assembly to prevent damaging it.

2. Align the holes in the auger/impeller housing with the holes in the engine frame (Fig. 2).

3. Route the auger/impeller drive belt around the impeller pulley (Fig. 2).

4. Secure the auger/impeller housing to the engine frame with 6 flange-head bolts (3/4-inch).

5. Install the idler pulley assembly, aligning the idler pulleys with the belts (Figs. 2 and 31).

6. Tip the snowthrower up on the front edge of the auger/impeller housing, and block it in place.

7. Move the wheels to the rear position. Refer to Operating the Power Shift Feature on page 16.

8. Push the latch arm to release the axle (Fig. 3).

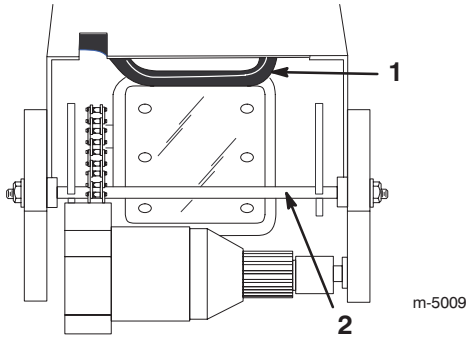

Figure 3

1. Latch arm
2. Latch rod

9. Pull up on the axle while holding in the latch arm (Fig. 3).

10. Continue pulling the axle upward until the latch rod (Fig. 3) springs into the locked position.

11. Install the lower belt cover on the underside of the auger/impeller housing and the engine frame with 2 (1/2-inch) flange-head bolts (Fig. 4).

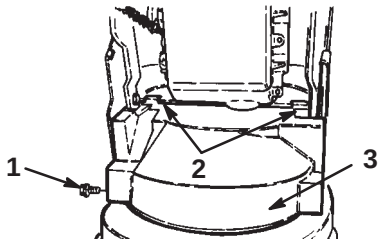

Figure 4

1. Flange-head bolt (2)
2. Mounting tabs
3. Lower belt cover (shown from bottom)

Note: Position the belt cover mounting tabs to the rear of the engine frame member.

12. Return the axle to its original position.

13. Lower the snowthrower onto its wheels.

14. Check the adjustment of the impeller cable; refer to steps 4 through 8 of Adjusting the Auger/Impeller Drive Belt on page 21.

15. Mount the upper belt cover to the engine frame with 3 flange-head bolts (1/2-inch) (Fig. 4).

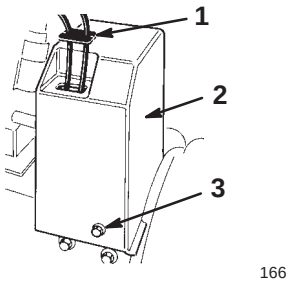

Figure 5

1. Cable cover
2. Upper belt cover
3. Flange-head bolt (3)

16. Slide the cable cover onto the cables and into the hole in the belt cover (Fig. 5).

Installing the Shift Rod

1. Insert the upper ball joint stud through the front of the shift bracket and secure it with a locknut (Fig. 6).

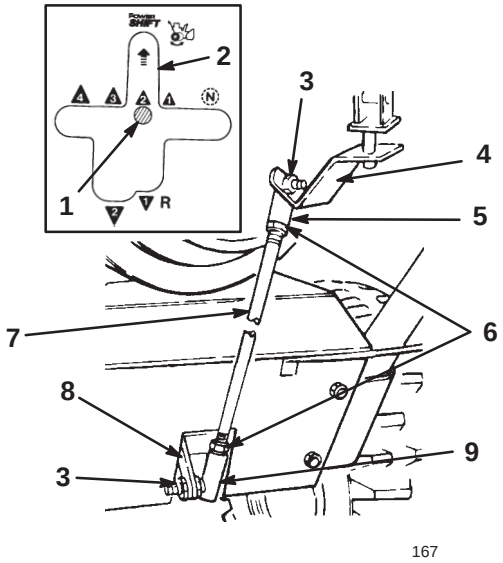

Figure 6

1. Gear shift lever
2. Power Shift slot
3. Locknut
4. Shift bracket
5. Upper ball joint
6. Jam nuts
7. Shift rod
8. Transmission lever
9. Lower ball joint

Note: Position the shift rod with the bend rearward.

2. Insert the lower ball joint stud through the right side of the transmission lever and secure it with a locknut (Fig. 6).

3. Shift the snowthrower into second gear and check the shift rod alignment with the Power Shift slot (see inset in Fig. 6).

Note: If the gear shift lever does not align with the Power Shift slot in the control panel, adjust the shift rod length as follows:

A. Disconnect the ball joint from the transmission lever and loosen the jam nut (Fig. 6).

B. Rotate the ball joint up or down until the gear shift lever aligns with the Power Shift slot (Fig. 6).

C. Install the ball joint to the transmission lever and tighten the jam nut (Fig. 6).

Installing the Discharge Chute

1. Apply a light coat of low-temperature grease to the chute ring (Fig. 7).

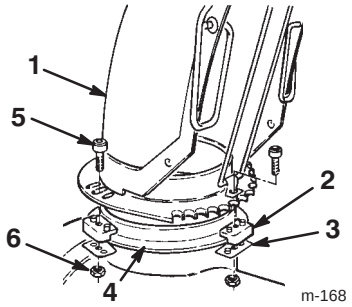

Figure 7

1. Discharge chute
2. Chute retainer (3)
3. Chute retainer plate (3)
4. Chute ring
5. Screw (3)
6. Locknut (3)

2. Set the discharge chute (open side forward) onto the discharge opening so that the chute retainers are on the chute ring (Fig. 7).

Note: Ensure that the chute retainer guide pins are in the holes in the chute gear.

3. Tighten the screw and the locknut on the left side to position the chute retainer against the chute retainer plate and to secure the discharge chute to the chute ring (Fig. 7).

4. Push the other chute retainers toward the discharge chute (slotted), and tighten the screws (Fig. 7).

5. Ensure that the chute rotates freely on the chute ring. If the chute binds, move the right-hand retainer outward (Fig. 7).

Installing the Chute Control Gear

1. Insert the 1-inch (2.5 centimeter) carriage bolt into the mounting hole of the gear bracket (Fig. 8).

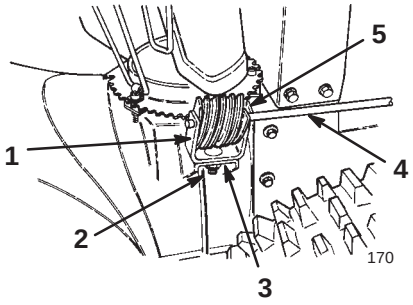

Figure 8

1. Gear bracket
2. Carriage bolt, flat washer, and locknut
3. Mounting flange
4. Chute gear rod
5. Worm gear

2. Position the worm gear into the bracket, align the holes, and insert the chute gear rod through the bracket and the gear (Fig. 8).
3. Loosely mount the worm gear and the bracket to the mounting flange with a carriage bolt, a flat washer, and a locknut (Fig. 8).
4. Slide the worm gear into the teeth of the chute gear and tighten the locknut.
5. Operate the chute control. If the chute control binds, apply a light coat of grease to the worm gear and move it slightly outward if it binds; move it slightly inward if it is too loose.

Installing the Skids

1. Check the air pressure in the tires; refer to Checking the Tire Pressure on page 13.
2. Move the snowthrower to a flat surface and ensure that the scraper (Fig. 9) is parallel to the ground. If it is not, adjust the scraper; refer to Adjusting the Skids and the Scraper on page 20.

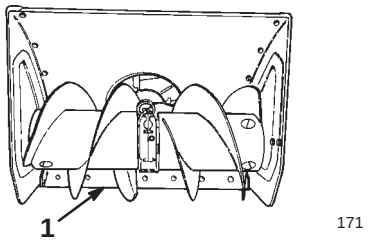

Figure 9

1. Scraper

3. Remove the 2 flange bolts and flat washers that secure the ends of the scraper to the side plates (Fig. 10).

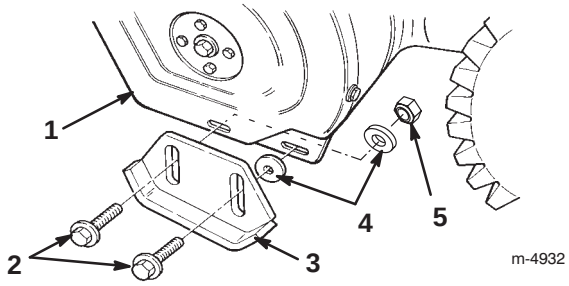

Figure 10

1. Side plate (2)
2. Flange bolts (4)
3. Skid (2)
4. Flat washers (4)
5. Locknut (2)

4. Insert a flange bolt through the rear slot in each skid.
5. Insert a washer **between each skid and the side plate** (Fig. 10). Do not tighten the bolts.
6. Install a flange bolt through the front slot of each skid and the side plate.
7. Insert a washer and a locknut **behind (on the inside of) the side plate** (Fig. 10). Do not tighten the bolts.

Note: The following steps describe how to adjust the skids for paved surfaces. For gravel or crushed rock surfaces, refer to Adjusting the Skids and the Scraper on page 20.

8. Manually move the wheels to the **rear** Power Shift position by lifting up on the handgrips and moving the shift control fully forward (Fig. 11).

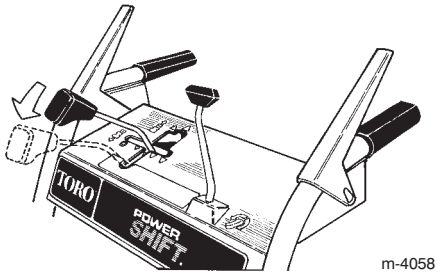

Figure 11

9. Support the **scraper** 1/8 inch (3 millimeters) above a level surface if you use the snowthrower on **smooth pavement**.

Note: The scraper should be higher than 1/8 inch (3 millimeters) above the pavement if it is cracked, rough, or uneven. **Setting the scraper too low may result in damage to the snowthrower that is not covered by the warranty.**

10. Move the skids down to sit flat on the ground and tighten the 4 flange bolts that secure both skids to the side plates.

Before Starting

Filling the Engine Crankcase with Oil

The engine comes from the factory with only a few ounces of oil in the crankcase. **Before starting the engine, add oil.** The crankcase in models 38079 and 38559 holds 26 ounces (0.77 liters) of oil, and the crankcase in model 38087 holds 28 ounces (0.83 liters) of oil. However, because there is some oil in the crankcase, do not add the full amount at one time. Use only a high-quality, SAE 5W–30 or SAE 10 weight detergent oil that has the American Petroleum Institute (API) service classification SF, SG, SH, or SJ. For extremely cold conditions (below 0°F or –18°C), use 0W–30 weight detergent oil that has the American Petroleum Institute (API) service classification SF, SG, SH, or SJ.

To add oil:

1. Move the snowthrower to a level surface to ensure an accurate oil level reading.
2. Clean around the dipstick (Fig. 12).

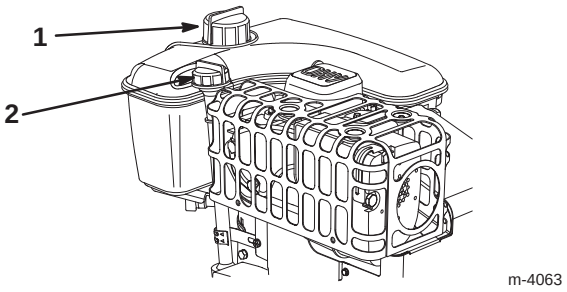

Figure 12

1. Dipstick
2. Fuel tank cap

3. Remove the dipstick by rotating the cap counterclockwise and pulling it out (Fig. 12).
4. Slowly pour about 3/4 of the crankcase capacity of oil into the crankcase.
5. Wipe the dipstick clean with a clean cloth.
6. Install the dipstick into the filler neck, then remove it.

Note: To ensure an accurate oil level reading, you must fully install the dipstick.

7. Read the oil level on the dipstick.
8. If the oil level is below the **Add** mark on the dipstick, **slowly** pour only enough oil into the filler hole to raise the oil level to the **Full** mark on the dipstick.

Important Do not overfill the crankcase with oil and run the engine; engine damage will result. Drain the excess oil until the oil level on the dipstick reads **Full**.

9. Insert the dipstick into the filler neck and rotate the cap clockwise until it is tight.

Filling the Fuel Tank with Gasoline

For best results, use clean, fresh, lead-free gasoline with an octane rating of 87 or higher. To ensure freshness, purchase only the quantity of gasoline that you expect to use in 30 days. Using unleaded gasoline results in fewer combustion deposits and longer engine life. You may use leaded gasoline if unleaded gasoline is not available.

Important Do not add oil to the gasoline.

Important Do not use methanol, gasoline containing methanol, gasohol containing more than 10% ethanol, premium gasoline, or white gas. Using these fuels can damage the engine's fuel system.

Important Do not use gasoline that is more than 30 days old.

Danger

In certain conditions, gasoline is extremely flammable and highly explosive. A fire or explosion from gasoline can burn you and others and can damage property.

- **Fill the fuel tank outdoors, in an open area, and when the engine is cold. Wipe up any gasoline that spills.**
- **Do not fill the fuel tank completely full. Add gasoline to the fuel tank until the level is 1/4 to 1/2 inch (6 to 13 mm) below the bottom of the filler neck. This empty space in the tank allows the gasoline to expand.**
- **Never smoke when handling gasoline, and stay away from an open flame or where a spark may ignite the gasoline fumes.**
- **Store gasoline in an approved fuel container and keep it out of the reach of children.**
- **Never buy more than a 30-day supply of gasoline.**

Danger

When fueling, under certain circumstances, a static charge can develop, igniting the gasoline. A fire or explosion from gasoline can burn you and others and damage property.

- **Always place gasoline containers on the ground and away from your vehicle before filling.**
- **Do not fill gasoline containers inside a vehicle or on a truck or trailer bed because interior carpets or plastic truck bed liners may insulate the container and slow the loss of any static charge.**
- **When practical, remove gasoline-powered equipment from the truck or trailer and refuel the equipment with its wheels on the ground.**
- **If this is not possible, then refuel such equipment on a truck or trailer from a portable container, not from a gasoline dispenser nozzle.**
- **If you must use a gasoline dispenser nozzle, keep the nozzle in contact with the rim of the fuel tank or container opening at all times until fueling is complete.**

Use a fuel stabilizer/conditioner regularly during operation and storage. A stabilizer/conditioner cleans the engine during operation and prevents gum-like varnish deposits from forming in the engine during periods of storage.

Important Do not use fuel additives other than a fuel stabilizer/conditioner. Do not use fuel stabilizers with an alcohol base such as ethanol, methanol, or isopropanol.

1. Clean around the fuel tank cap (Fig. 12).
2. Remove the fuel tank cap.
3. Fill the fuel tank with unleaded to within 1/4 to 1/2 inch (6 to 13 millimeters) from the top of the tank. **Do not fill into the filler neck.**

Important Do not fill the fuel tank more than 1/4 inch (6 millimeters) from the top of the tank because the gasoline must have room to expand.

4. Install the fuel tank cap and wipe up any spilled gasoline.

Checking the Tire Pressure

Check the pressure of the tires because they are overinflated at the factory for shipping. Reduce the pressure equally in both tires to between 12 and 15 psi (82 and 103 kPa).

Reviewing the Maintenance Schedule

Review the Recommended Maintenance Schedule on page 18. You may need to perform one or more additional procedures before or soon after you begin operating the snowthrower.

Operation

Note: Determine the left and right sides of the machine from the normal operating position.

Operating Controls

- **Auger/Impeller Drive Control Lever** (Fig. 13)—To engage both the auger and impeller, press the lever against the right handgrip. To disengage, release the lever.

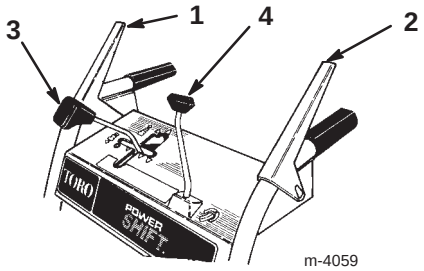

Figure 13

1. Auger/impeller drive control lever
2. Traction control lever
3. Speed shift control
4. Discharge chute control

- **Traction Control Lever** (Fig. 13)—To engage the traction (wheel drive), press the lever against the left handgrip. To stop the traction, release the lever.
- **Speed Shift Control** (Fig. 13)—This control has a neutral position, 4 forward speeds, and 2 reverse speeds. It also controls the power shifting of the wheels. To select a speed, move the shift control to the desired position.

  Note: Before shifting the gears into or out of reverse, or when using the Power Shift feature, release the traction drive control. You man shift between any of the **forward** speeds without releasing the traction control lever.
- **Discharge Chute Control** (Fig. 13)—Rotate the discharge chute control clockwise to move the discharge chute to the right; counterclockwise to move the chute to the left.

- **Auger/Impeller Lockup**—When you press both the auger/impeller drive control lever and traction control lever, the traction control lever locks the auger/impeller drive control lever down. Release the traction control lever to release both levers.
- **Ignition Switch** (Fig. 14)—Insert the key before starting the engine. To stop the engine, remove the key.

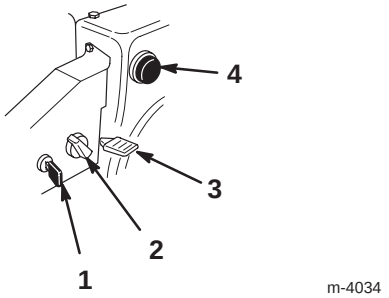

Figure 14

1. Ignition switch
2. Choke
3. Throttle
4. Primer

- **Choke** (Fig. 14)—Rotate the choke to the **On** position to start a cold engine. As engine warms up, gradually rotate the choke counterclockwise to the **Off** position.
- **Throttle** (Fig. 14)—Move the throttle upward to increase the engine speed; move it downward to decrease the engine speed. Move the throttle to the **Stop** position to stop the engine.
- **Primer** (Fig. 14)—Press the primer to pump a small amount of gasoline into the engine for improved cold-weather starting.
- **Fuel Shutoff Valve** (Fig. 15)—Close the valve by rotating it clockwise. Open the valve by rotating it counterclockwise. Close the valve when you do not use the snowthrower.

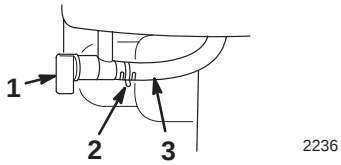

Figure 15

1. Fuel shutoff valve
2. Hose clamp
3. Fuel line

- **Chute Deflector Handle** (Fig. 16)—Move the deflector handle forward to move the snow stream down and rearward to move the snow stream up.

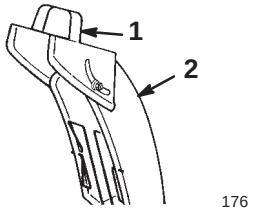

Figure 16

1. Deflector handle
2. Discharge chute

- **Recoil Starter** (Fig. 17)—The recoil starter is on the back side of the engine. Pull the recoil starter to start the engine.

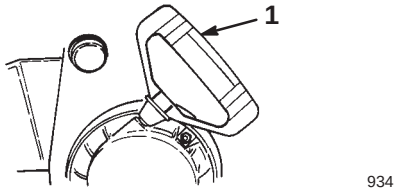

Figure 17

1. Recoil starter

Removing the Carburetor Heater Box

If you operate the engine when the air temperature is above 40°F (4°C), remove the carburetor heater box (Fig. 18).

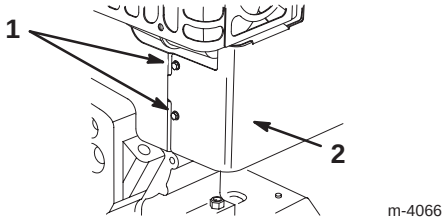

Figure 18

1. Screws
2. Carburetor heater box

1. Disconnect the wire from the spark plug and ensure that the wire does not contact the plug (Fig. 18).

2. Remove the key from the ignition switch (Fig. 14).

3. Pull the choke knob off (Fig. 14).

4. Remove 2 screws that secure the carburetor heater box in place (Fig. 18).

Note: Install these fasteners in their holes for safe keeping.

5. Lift the carburetor heater box up and away from the engine.

6. Disconnect the green ground wire clip under the throttle (Fig. 19).

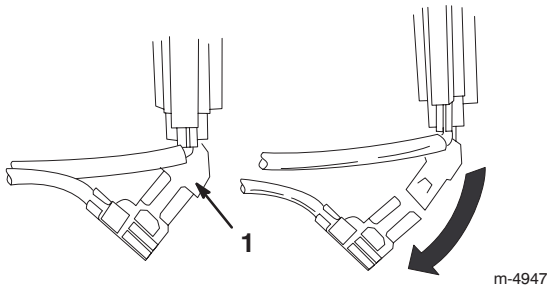

Figure 19

1. Green ground wire clip

7. Install the choke knob.

8. Insert the ignition key.

9. Connect the wire to the spark plug.

Important Use the heater box as a reference for the choke and throttle positions.

Installing the Carburetor Heater Box

To install the carburetor heater box, reverse steps 1 through 9 of Removing the Carburetor Heater Box on page 14. Remove the fasteners from their holes before installing the carburetor heater box.

Starting the Engine

Important Ensure that there are no obstructions in the auger/impeller and the discharge chute before you operate the snowthrower. **Use a stick, not your hand, to remove an obstruction from the auger/impeller or the discharge chute.**

1. Connect the wire to the spark plug.

2. Move the speed shift control to the **N** (**Neutral**) position and the throttle to the **Fast** position.

3. Release the auger/impeller drive control lever and the traction control lever (Fig. 13).

4. Open the fuel shutoff valve below the fuel tank (Fig. 15).

5. Rotate the choke (Fig. 14) to the **On** position.

6. Insert the ignition key (Fig. 14).

Important Do not use the primer or the choke if the engine has been running and is hot. Excessive priming may flood the engine and prevent it from starting.

7. Cover the hole in the center of the primer (Fig. 14) with your thumb and slowly push in the primer 3 times, pausing a moment between pushes.

8. Grasp the recoil starter handle (Fig. 17) and pull it out slowly until positive engagement results; then pull the handle vigorously to start the engine.

9. Keep a firm grip on the starter handle and return the rope slowly.

Note: If engine does not start or if the air temperature is –10°F (–23°C) or colder, the engine may need additional priming. After pushing in the primer, try to start the engine before priming again.

10. After the engine starts, immediately rotate the choke (Fig. 14) to the 3/4 position. As the engine warms up, rotate the choke to the 1/2 position. When the engine warms up sufficiently, rotate the choke to the **Off** position.

Important Ensure that the auger and impeller do not rotate while the auger/impeller drive control lever is in the **Disengaged** position. Stand in the operating position and look around to the side of the auger housing (Fig. 20). A large screw head on the side of the auger housing rotates when the auger and impeller rotate (Fig. 20). **If the auger and impeller rotate while the engine runs and the auger/impeller drive control lever is disengaged, stop the snowthrower immediately.** Refer to Adjusting the Auger/Impeller Drive Belt on page 21. If the problem persists, take the snowthrower to an Authorized Service Dealer for service.

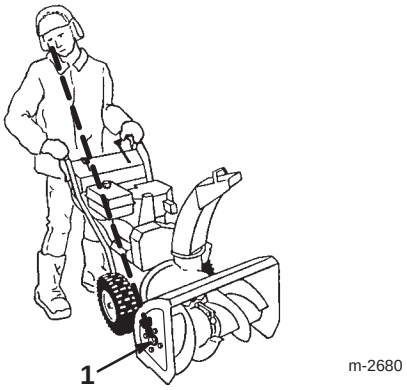

Figure 20

1. Large screw head

Stopping the Engine

1. Engage the auger to clear any remaining snow from inside the housing.
2. Run the engine for a few minutes to dry off any accumulated moisture.
3. Release the auger/impeller drive control lever and the traction control lever (Fig. 13).
4. Shift the traction drive into the **N** (**Neutral**) position.
5. Stop the engine by doing one of the following:

   A. Move the throttle to the **Slow** position and remove the ignition key.

   B. Move the throttle to the **Stop** position.
6. Close the fuel shutoff valve (Fig. 15).
7. Pull the recoil starter with a rapid, continuous, full-arm stroke 3 or 4 times. This prevents the recoil starter from freezing up.
8. Wait for all moving parts to stop before leaving the operating position.

Operating the Power Shift Feature

Move the wheels to the rear Power Shift position in heavy or drifted snow. Leave the wheels in the front position for light snow or for transporting the snowthrower.

With the engine running at full speed:

1. Release the traction control lever (Fig. 13).
2. Move the speed shift control fully forward to the Power Shift position and hold it there (Fig. 21).

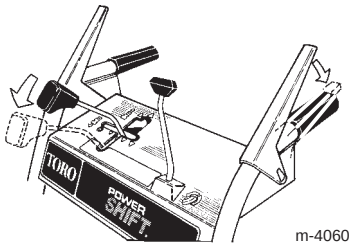

m-4060

Figure 21

3. Fully engage the traction drive lever to move the wheels into the alternate position (Figs. 21 and 22).

   Note: When shifting, you may need to slightly raise the handle assembly to assist the wheel movement.

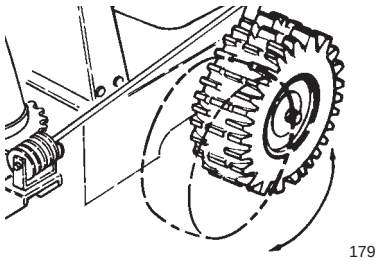
179

Figure 22

4. Release the speed shift control.

Note: To shift the wheels manually when the engine is not running, follow steps 1 and 2 and then lift up on the handles to unlock the wheels.

Freewheeling or Self-propel Drive

You can operate the snowthrower with the self-propel feature engaged or disengaged (freewheeling). When you insert the axle pins through the outer axle holes and not through the wheel hubs (Fig. 23), the snowthrower freewheels. When you insert the axle pins through the holes in the wheel hubs and the inner axle holes (Fig. 23) and engage the traction control lever, the snowthrower propels itself.

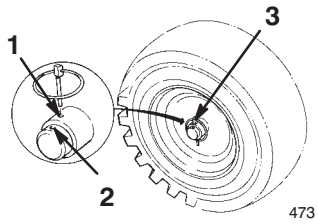

473

Figure 23

1. Inner axle hole
2. Outer axle hole and wheel hub
3. Axle pin

Adjusting the Headlight

1. Loosen the 2 nuts on the U-bolt that hold the headlight bracket to the handle (Fig. 24).

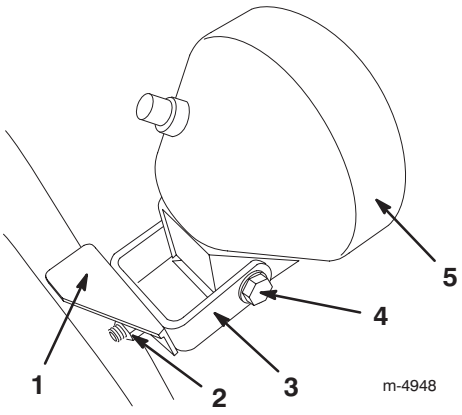

Figure 24

1. Bracket
2. Nut (2)
3. U–bolt
4. Pivot bolt
5. Headlight

2. Slide the bracket and the headlight to the desired position and tighten the nuts on the U-bolt.

3. Tighten the pivot bolt on the rear of the headlight assembly when the light is in the desired position.

Snowthrowing Tips

Danger

When the snowthrower is in operation, the impeller and auger can be rotating and cut off or injure hands and feet.

- **Before adjusting, cleaning, repairing and inspecting the snowthrower, and before unclogging the discharge chute, *stop the engine and wait for all moving parts to stop.* Disconnect the wire from the spark plug and keep it away from the plug to prevent someone from accidentally starting the engine.**
- **Use a stick, *not your hands*, to remove an obstruction from the discharge chute.**
- **Stay behind the handles and away from the discharge opening while operating the snowthrower.**
- **Keep face, hands, feet, and any other part of your body or clothing away from concealed, moving, or rotating parts.**

Warning

The auger/impeller may pick up and throw stones, toys, and other foreign objects, causing serious personal injury to the operator or to bystanders.

- **Keep the area to be cleared free of all objects that could be picked up and thrown by the auger/impeller.**
- **Keep all children and pets away from area of operation.**

- Adjust the skids to match the type of surface being cleaned. Refer to Adjusting the Skids and the Scraper on page 20.
- In snowy and cold conditions, some controls and moving parts may freeze. **Do not use excessive force when trying to operate frozen controls.** If you have difficulty operating any control or part, start the engine and let it run for a few minutes.
- Remove snow as soon as possible after it falls. This produces the best snow removal results.
- Always use the **Fast** throttle position when throwing snow.
- Overlap each swath to ensure complete snow removal.
- Discharge the snow downwind whenever possible.
- Do not overload the snowthrower by clearing snow at too fast a rate. If the engine slows down, shift the snowthrower into a lower gear to reduce the forward speed.
- In wet or slushy conditions, maintain maximum engine speed, and do not overload the engine to prevent clogging the discharge chute.
- If the front of the snowthrower tends to ride up, reduce the forward speed by shifting the snowthrower into a lower gear. If the front still tends to ride up, lift up on both handgrips to hold down the front of snowthrower.
- If the wheels slip, shift the snowthrower into a lower gear to reduce the forward speed.
- After clearing the snow, let the engine run for a few minutes to prevent moving parts from freezing. Engage the auger/impeller to clear any remaining snow from inside the housing. Shut off the engine, wait for all moving parts to stop, and remove all ice and snow from the snowthrower.
- With the engine shut off, pull the recoil starter handle several times to prevent the recoil starter from freezing up.
- When you are not using the snowthrower, close the fuel shutoff valve and remove the key.

Maintenance

Note: Determine the left and right sides of the machine from the normal operating position.

Recommended Maintenance Schedule

Maintenance Service Interval	Maintenance Procedure
Initially	• Check the engine oil level.[1] Refer to Checking the Engine Oil Level on page 19. • Check the auger gearbox oil level and add oil if necessary. Refer to Checking the Auger Gearbox Oil Level on page 19. • Adjust the skids and the scraper.[2] Refer to Adjusting the Skids and the Scraper on page 20.
1 Hour	• Inspect and adjust the traction drive belt. Refer to Adjusting the Traction Drive Belt on page 20. • Inspect and adjust the auger/impeller drive belt. Refer to Adjusting the Auger/Impeller Drive Belt on page 21.
2 Hours	• Change the engine oil. Refer to Changing the Engine Oil on page 23.
5 Hours	• Inspect and adjust or replace the traction drive belt if necessary. Refer to Adjusting the Traction Drive Belt on page 20, or to Replacing the Drive Belts on page 22. • Inspect and adjust or replace the auger/impeller drive belt if necessary. Refer to Adjusting the Auger/Impeller Drive Belt on page 21, or to Replacing the Drive Belts on page 22.
10 Hours	• Check the auger gearbox oil level and add oil if necessary. Refer to Checking the Auger Gearbox Oil Level on page 19.
15 Hours	• Lubricate the drive chain. Refer to Lubricating the Drive Chain on page 23.
25 Hours	• Change the engine oil. Refer to Changing the Engine Oil on page 23. • Inspect and adjust the drive chain if necessary. Refer to Adjusting the Drive Chain on page 23.
100 Hours	• Inspect and gap the spark plug. Replace it if necessary. Refer to Replacing the Spark Plug on page 24.
Annually	• Check the auger gearbox oil level after removing the snowthrower from storage and add oil if necessary. Refer to Checking the Auger Gearbox Oil Level on page 19. • Change the engine oil at the end of the snowthrowing season. Refer to Changing the Engine Oil on page 23. • Lubricate the drive chain. Refer to Lubricating the Drive Chain on page 23. • Drain the gasoline and run the engine to dry out the fuel tank and the carburetor at the end of the snowthrowing season. Refer to Emptying the Fuel Tank on page 24.

[1]Check the engine oil level **before each use** and add oil if necessary.

[2]Adjust the skids and the scraper as needed.

Important Refer to your engine operator's manual for additional maintenance procedures.

Caution

If you leave the wire on the spark plug, someone could accidently start the engine and seriously injure you or other bystanders.

Disconnect the wire from the spark plug before you do any maintenance. Set the wire aside so that it does not accidentally contact the spark plug.

Checking the Engine Oil Level

Every time you use the snowthrower, first ensure that the oil level is between the **Add** and the **Full** marks on the dipstick.

1. Stop the engine and wait for all moving parts to stop.
2. Move the snowthrower to a level surface to ensure an accurate oil level reading.
3. Clean around the dipstick (Fig. 12).
4. Remove the dipstick by rotating the cap counterclockwise and pulling it out (Fig. 12).
5. Wipe the dipstick clean with a clean cloth.
6. Install the dipstick into the filler neck, then remove it.

   Note: To ensure an accurate oil level reading, you must fully install the dipstick.
7. Read the oil level on the dipstick.
8. If the oil level is below the **Add** mark on the dipstick, **slowly** pour only enough oil into the filler hole to raise the oil level to the **Full** mark on the dipstick.

   Note: Use only a high-quality, SAE 5W–30 or SAE 10 weight detergent oil that has the American Petroleum Institute (API) service classification SF, SG, SH, or SJ. For extremely cold conditions (below 0°F or –18°C), use 0W–30 weight detergent oil that has the American Petroleum Institute (API) service classification SF, SG, SH, or SJ.

Important Do not overfill the crankcase with oil and run the engine; engine damage will result. Drain the excess oil until the oil level on the dipstick reads **Full**.

9. Insert the dipstick into the filler neck and rotate the cap clockwise until it is tight.

Checking the Auger Gearbox Oil Level

Check the oil level in the auger gearbox initially, after every 10 operating hours, and when you remove the snowthrower from annual storage.

1. Stop the engine and wait for all moving parts to stop.
2. Move the snowthrower to a level surface.
3. Disconnect the wire from the spark plug and ensure that the wire does not contact the spark plug (Fig. 25).

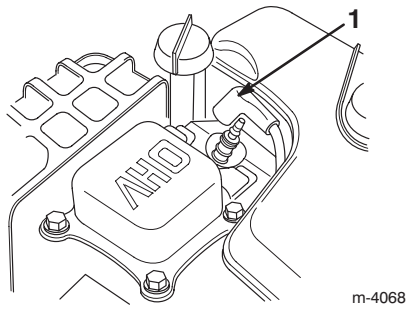

Figure 25

1. Spark-plug wire

4. Clean the area around the pipe plug (Fig. 26).

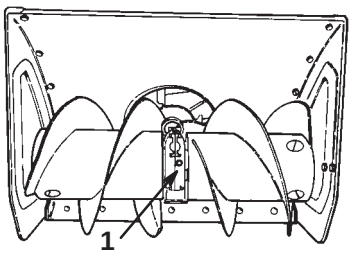

Figure 26

1. Pipe plug

5. Remove the pipe plug from the gearbox (Fig. 26).
6. Check the oil level in the gearbox. The oil should be at the point of overflowing in the filler opening.
7. If the oil level is low, add **GL-5** or **GL-6, SAE 85–95 EP** transmission oil to the gearbox until the point of overflow. **Do not use synthetic gear oil.**

8. Install the pipe plug in the gearbox.
9. Connect the wire to the spark plug.

Adjusting the Skids and the Scraper

Adjust the skids and the scraper initially and then as needed to ensure that the auger does not contact the paved or gravel surface. Also, adjust them as needed to compensate for wear.

1. Stop the engine and wait for all moving parts to stop.
2. Move the snowthrower to a level surface and shift the wheels to the front position.
3. Disconnect the wire from the spark plug and ensure that the wire does not contact the plug (Fig. 25).
4. Check the tire pressure in the tires. Refer to Checking the Tire Pressure on page 13.
5. Loosen the 4 flange bolts that secure both skids to the auger side plates (Fig. 10) until the skids slide up and down easily.
6. Support the **auger blades** so that they are at least 1/8 inch (3 millimeters) off the ground (Fig. 27).

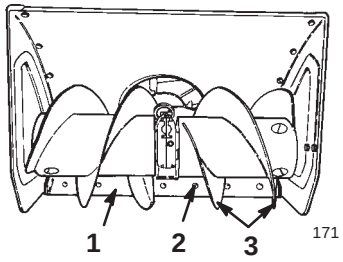

Figure 27

1. Scraper
2. Carriage bolt (6)
3. Auger blades

Note: Setting the auger blades too low may result in damage to the snowthrower that is not covered by the warranty.

7. Check the scraper adjustment. The scraper should be 1/8 inch (3 millimeters) above and parallel to a level surface.

Note: Setting the scraper too low may result in damage to the snowthrower that is not covered by the warranty.

For Concrete and Asphalt Surfaces:

If the snowthrower does not clear the snow close enough to the pavement, adjust the skids to lower the scraper; if the pavement surfaces are cracked, rough, or uneven, adjust the skids to raise the scraper.

For Gravel Surfaces:

Support the auger blades a few inches (centimeters) above the ground, and adjust the skids to prevent the snowthrower from picking up rocks.

8. To adjust the scraper, loosen the carriage bolts that secure the scraper to the auger housing (Fig. 27), level the scraper, and tighten the carriage bolts.
9. Move the skids down as far as possible.
10. Tighten the 2 front flange bolts that secure both skids to the auger side plates.
11. Connect the wire to the spark plug.

Adjusting the Traction Drive Belt

Check the traction drive belt for the proper tension after the first operating hour, after every 5 operating hours thereafter. Adjust the belt when necessary or whenever you replace it.

1. Loosen the upper jam nut that secures the traction cable to the mounting bracket (Fig. 28).

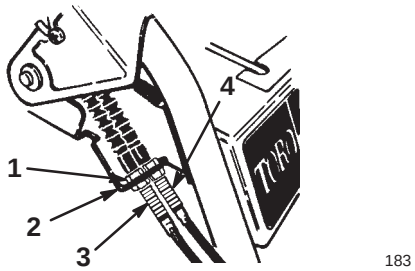

Figure 28

1. Jam nut
2. Mounting bracket
3. Auger/impeller cable (outer cable)
4. Traction cable (inner cable)

2. Rotate the bottom jam nut upward to increase the belt tension (Fig. 28).

   Note: When you adjust the cable, always rotate the jam nut one full turn at a time.
3. Tighten the upper jam nut against the bracket.
4. Check the tension of the belt by operating the snowthrower.

Note: The snowthrower should begin to move forward when you press the traction control lever about halfway down toward the handgrip.

5. Stop the engine and repeat steps 1 through 4 until you achieve the proper adjustment.

Important Do not adjust the belt too tightly; a tight belt can cause the snowthrower to creep even after you release the traction control lever. If this occurs, decrease the belt tension.

Adjusting the Auger/Impeller Drive Belt

Operating the snowthrower with an auger/impeller drive belt that slips decreases the snowthrowing performance and damages the belt. Check the auger/impeller drive belt for the proper tension after the first operating hour, after every 5 operating hours thereafter. Adjust the belt when necessary.

1. Stop the engine and wait for all moving parts to stop.
2. Disconnect the wire from the spark plug and ensure that the wire does not contact the plug (Fig. 25).
3. Remove the 3 flange-head bolts that secure the belt cover to the engine frame and slide the belt cover up the cables (Fig. 5).
4. Depress the auger/impeller drive control lever (Fig. 13).
5. Hold the lever and insert a 0.010 inch (0.25 mm) feeler gauge between a coil in the center of the spring (Fig. 29).

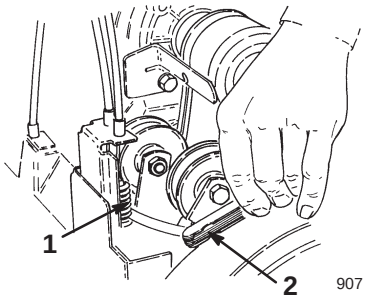

Figure 29

1. Center of spring
2. Feeler gauge

6. If the space between the coils is not 0.010 inch (0.25 mm), adjust the cables as follows:
   A. Loosen the upper jam nut that secures the auger/impeller cable to the mounting bracket (Fig. 28).
   B. Rotate the bottom jam nut upward to increase the belt tension.
   C. Tighten the upper jam nut against the bracket.
7. Repeat steps 4 through 6.
8. Check the impeller brake arm clearance by releasing the auger/impeller drive control lever.

   Note: With the lever released, there should be at least 1/8 inch (3 mm) clearance between the tab on the impeller idler arm and the brake arm (Fig. 30).

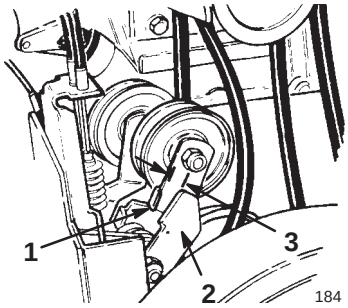

Figure 30

1. Impeller idler arm
2. Brake arm
3. 1/8 inch (3 mm) minimum

Important If there is less than 1/8 inch (3 mm) clearance between the tab on the impeller idler arm and the brake arm, replace the belt. Refer to Replacing the Drive Belts on page 22.

Danger

Improperly adjusting the auger/impeller drive belt may cause injury if the auger/impeller continues to turn after you release the control lever. A rotating impeller or auger can cut off or injure fingers or hands.

- **Keep your face, hands, feet, and any other part of your body or clothing away from moving or rotating parts.**
- **Maintain the proper impeller brake arm clearance.**
- **Do not adjust the auger/impeller drive belt too tightly. If the auger/impeller continues to turn after you release the control lever, decrease the belt tension.**

9. Install the belt and the cable covers.
10. Check the belt tension by operating the auger/impeller.
11. **If belt still slips, replace it.** Refer to Replacing the Drive Belts on page 22.
12. Connect the wire to the spark plug.

Replacing the Drive Belts

If the auger/impeller drive belt or the traction drive belt (Fig. 31) becomes worn, oil-soaked, or otherwise damaged, replace the belt.

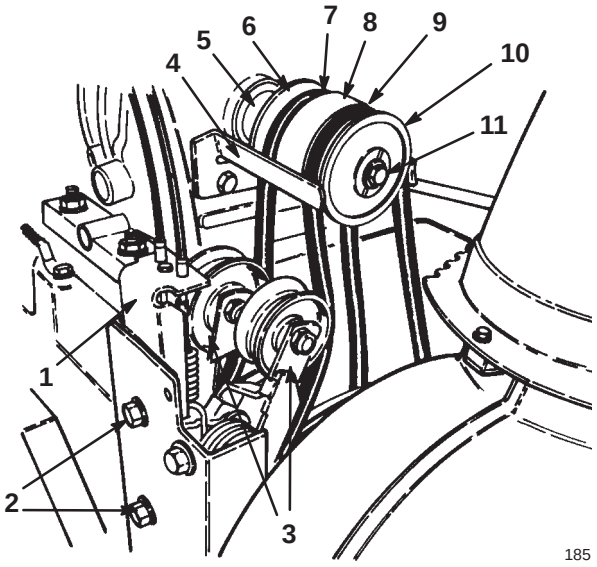

Figure 31

1. Idler pulley assembly
2. Flange-head bolts
3. Idler pulley
4. Belt guide
5. Pulley extension
6. Back sheave
7. Traction drive belt
8. Middle pulley section
9. Auger/impeller drive belt
10. Half sheave
11. Bolt and lock washer

---

1. Stop the engine and wait for all moving parts to stop.

2. Disconnect the wire from the spark plug and ensure that the wire does not contact the plug (Fig. 25).

3. Remove the 3 flange-head bolts that secure the belt cover to the engine frame and slide the belt cover and the cable cover up the cables (Fig. 5).

4. Move the speed shift control to the **N** (**Neutral**) position.

5. Remove the 2 flange bolts that secure the idler pulley assembly to the engine frame and remove the idler pulley assembly (Fig. 31).

6. Remove the bolt and the lock washer that secure the half sheave to the front of the pulley assembly (Fig. 31).

Note: You can remove the belt guide and use a slip-joint pliers or a pipe wrench on the pulley extension (Fig. 31) to hold the crankshaft steady while you perform this step.

7. Slide the half sheave and auger/impeller drive belt off the crankshaft and remove the belt (Fig. 31).

8. Remove the auger/impeller drive belt from the lower auger pulley.

9. If you need to replace the traction drive belt, slide the middle pulley section and the belt off the crankshaft, and remove the belt from the pulley (Fig. 31).

10. Remove the traction drive belt from the lower traction pulley.

11. Install the traction drive belt around the lower traction pulley and the back sheave, then slide the middle pulley section onto the crankshaft (Fig. 31).

12. Install the auger/impeller drive belt around the lower auger pulley and then around the front of the middle pulley section.

13. Slide the front sheave onto the crankshaft (Fig. 31).

Note: Ensure that the tabs on the half sheave are inserted into the mounting grooves in the middle pulley.

Note: Do not pinch the auger/impeller drive belt.

14. Install and hand tighten the lock washer and bolt that secure the front sheave to the middle pulley section.

15. Partially tighten the bolt, then rotate the pulley slowly by pulling the recoil rope to ensure that the belts are not pinched; repeat this step a few times until you have tightened the bolt securely and the belts are not pinched.

Note: You can use a slip-joint pliers or a pipe wrench on the pulley extension (Fig. 31) to hold the crankshaft steady while you perform this step.

16. Install the idler pulley assembly on the engine frame and secure it with the 2 flange-head bolts (Fig. 31).

Note: Ensure that the idler pulleys align with the belts when you install the idler pulley assembly.

17. To adjust the belts, refer to Adjusting the Traction Drive Belt on page 20 or Adjusting the Auger/Impeller Drive Belt on page 21.

18. Install the belt and cable covers.

19. Connect the wire to the spark plug.

Changing the Engine Oil

Change the engine oil after the first 2 operating hours, after every 25 operating hours, and at the end of the snowthrowing season. If possible, run the engine just before changing the oil because warm oil flows better and carries more contaminants.

1. Stop the engine and wait for all moving parts to stop.
2. Disconnect the wire from the spark plug and ensure that the wire does not contact the plug (Fig. 25).
3. Clean the area around the oil drain plug (Fig. 32).

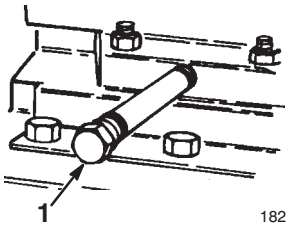

Figure 32

1. Drain plug

4. Slide an oil drain pan under the drain extension and remove the oil drain plug.
5. Drain the oil.
6. Install the oil drain plug.
7. Fill the crankcase with oil. Refer to Filling the Engine Crankcase with Oil on page 12.
8. Wipe up any spilled oil.
9. Connect the wire to the spark plug.

Lubricating the Drive Chain

Lightly lubricate the drive chain after every 15 operating hours and at the end of the snowthrowing season.

1. Disconnect the wire from the spark plug and ensure that the wire does not contact the plug (Fig. 25).
2. Lightly lubricate the drive chain with a chain lubricant (Fig. 33).

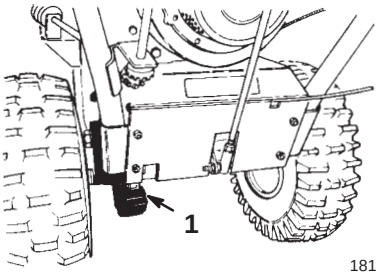

Figure 33

1. Drive chain

3. Wipe up any excess oil.
4. Connect the wire to the spark plug.

Adjusting the Drive Chain

Check the chain deflection after every 25 operating hours. If the deflection mid span between the transmission and the axle sprocket is not between 1/8 and 3/8 inch (3 and 10 mm), adjust the drive chain.

1. Stop the engine and wait for all moving parts to stop.
2. Disconnect the wire from the spark plug and ensure that the wire does not contact the plug (Fig. 25).
3. Drain the gasoline from the fuel tank. Refer to Emptying the Fuel Tank on page 24.
4. Shift the wheels into the rear position.
5. Move the speed shift control into second gear.
6. Tip the snowthrower forward onto its auger housing and block it so that it cannot fall.
7. Check the deflection of the chain by lifting up on it with moderate pressure at the mid span. There should be a 1/8 to 3/8 inch (3 to 10 mm) deflection (Fig. 34).

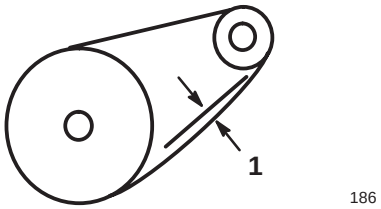

Figure 34

1. 1/8 to 3/8 inch (3 to 10 mm) deflection

8. If the deflection is not between 1/8 and 3/8 inch (3 and 10 mm), go to step 9; otherwise, return the snowthrower to its upright position.

9. Loosen the 4 flange-head bolts (2 on each side) that secure the transmission frame to the engine frame (Figs. 35 and 36).

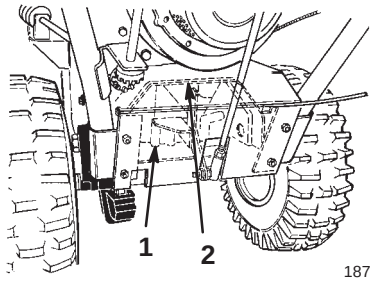

Figure 35

1. Transmission
2. Transmission frame

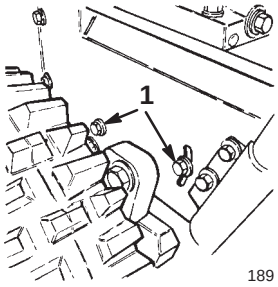

Figure 36

1. Flange-head bolts

10. Pivot the rear of the transmission frame until the chain deflection is between 1/8 and 3/8 inch (3 and 10 mm).

11. Tighten the flange-head bolts.

12. Check the chain deflection.

Important Excessive chain tension may cause transmission damage or chain failure.

13. Check the speed shift control alignment with the Power Shift slot. If the gear shift lever does not align with the Power Shift slot in the control panel (see inset in Fig. 6), adjust the shift rod length as follows:

    A. Disconnect the ball joint from the transmission lever and loosen the jam nut.

    B. Rotate the ball joint up or down until the gear shift lever aligns with the Power Shift slot.

    C. Install the ball joint to the transmission lever and tighten the jam nut.

14. Connect the wire to the spark plug.

Replacing the Spark Plug

Use a **Champion RN4C** or equivalent spark plug. Install a new plug after every 100 operating hours.

1. Stop the engine and wait for all moving parts to stop.
2. Clean any debris from around the base of the spark plug.
3. Disconnect the wire from the spark plug (Fig. 25).
4. Remove the spark plug.
5. Examine the spark plug and replace it if it is cracked, fouled, dirty, or if the electrodes are worn.

Important Do not clean the electrodes because grit could enter the cylinder and damage the engine.

6. Set the gap between the electrodes on the spark plug at 0.030 inch (0.76 mm) as shown in Figure 37.

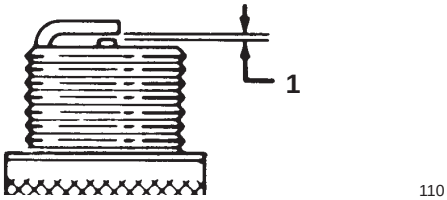

Figure 37

1. 0.030 inch (0.76 mm)

7. Install the spark plug by hand and then torque it to 15 ft.-lb. (20.4 N·m). If you do not have a torque wrench, tighten the plug firmly.
8. Connect the wire to the spark plug.

Emptying the Fuel Tank

1. Stop the engine and wait for all moving parts to stop.
2. Disconnect the wire from the spark plug (Fig. 25).
3. Close the fuel shutoff valve (Fig. 15).

Danger

Gasoline is highly flammable; it can ignite and cause serious personal injury.

- **Drain gasoline outdoors.**
- **Drain gasoline from a cold engine only.**
- **Wipe up any gasoline that may have spilled.**
- **Do not drain gasoline near any open flame or where gasoline fumes may be ignited by a spark.**
- ***Do not smoke* a cigar, a cigarette, or a pipe when handling gasoline.**

4. Place a clean drain pan under the fuel shutoff valve.

5. Loosen the hose clamp that secures the fuel line to the valve and slide the fuel line off the fuel shutoff valve (Fig. 15).
6. Open the fuel shutoff valve and allow the fuel to drain out of the fuel tank into the drain pan.
7. Install the fuel line onto the fuel shutoff valve and secure it with a hose clamp.
8. Connect the wire to the spark plug.
9. Start the snowthrower and run the engine until it stops. Repeat this step 2 more times to ensure that the fuel tank and the carburetor are empty.

Storage

Warning

Gasoline fumes are highly flammable, explosive, and dangerous if inhaled. If the product is stored in an area with an open flame, the gasoline fumes may ignite and cause an explosion.

Do not store the snowthrower in a house (living area), basement, or any other area where ignition sources may be present, such as hot water and space heaters, clothes dryers, furnaces, and other like appliances.

Preparing the Fuel System

1. Add stabilizer/conditioner to the fuel in the fuel tank as directed.
2. Run the engine for 10 minutes to distribute conditioned fuel through the fuel system.
3. Stop the engine, allow it to cool, and drain the fuel tank or run the engine until it stops. Refer to Emptying the Fuel Tank on page 24.
4. Start the engine and run it until it stops.
5. Choke or prime the engine, start it a third time, and run the engine until it will not start.
6. Dispose of unused fuel properly. Recycle it according to local codes, or use it in your automobile.

Note: Do not store stabilized gasoline for more than 90 days.

Preparing the Engine

1. While the engine is still warm, change the engine oil. Refer to Changing the Engine Oil on page 23.
2. Remove the spark plug.
3. Use an oil can to squirt 2 teaspoons of oil into the spark plug hole.
4. Install the spark plug by hand and then torque it to 15 ft.-lb. (20.4 N·m). If you do not have a torque wrench, tighten the plug firmly. **Do not connect the wire to the plug.**
5. Pull the recoil starter slowly to distribute the oil on the inside of the cylinder.

Preparing the Snowthrower

1. Clean the snowthrower.
2. Touch up chipped surfaces with paint available from an Authorized Service Dealer. Sand affected areas before painting, and use a rust preventative to prevent the metal parts from rusting.
3. Tighten all screws and nuts. Repair or replace any damaged parts.
4. Cover the snowthrower and store it in a clean, dry place out of the reach of children. Allow the engine to cool before storing it in any enclosure.

Troubleshooting

Toro designed and built your snowthrower for trouble-free operation. Check the following components and items carefully, and refer to Maintenance on page 18 for more information. If a problem continues, see an Authorized Service Dealer.

Problem	Possible Causes	Corrective Action
Electric starter does not turn (electric-start models only)	1. The power cord is disconnected at the outlet or the snowthrower.	1. Connect the power cord to the outlet and/or the snowthrower.
	2. The power cord is worn, corroded, or damaged.	2. Replace the power cord.
	3. The power outlet is not energized.	3. Have a qualified electrician energize the power outlet.
Engine does not start or starts hard	1. The key is not in the ignition or is in the **Off** position.	1. Insert the key into the ignition and turn it to the **On** position.
	2. The choke is in the **Off** position and the primer has not been pressed.	2. Move the choke to the **On** position and press the primer 3 times.
	3. The fuel shutoff valve is not open.	3. Open the fuel shutoff valve.
	4. The throttle is not in the **Fast** position.	4. Move the throttle to the **Fast** position.
	5. The fuel tank is empty or the fuel system contains stale fuel.	5. Drain and/or fill the fuel tank with fresh gasoline (not more than 30 days old). If the problem persists, contact your Authorized Service Dealer.
	6. The spark plug wire is loose or disconnected.	6. Connect the wire to the spark plug.
	7. The spark plug is pitted, fouled, or the gap is incorrect.	7. Check the spark plug and adjust the gap if necessary. Replace the spark plug if it is pitted, fouled, or cracked.
	8. The fuel cap vent is restricted.	8. Remove the vent restriction or replace the fuel cap.
	9. The engine oil level in the engine crankcase is too low or too high.	9. Add or drain oil to adjust the oil level in engine crankcase to the **Full** mark on the dipstick.
	10. The air temperature is above 40°F (4°C) and the carburetor heater box is on the snowthrower.	10. Remove the carburetor heater box.
Engine runs rough	1. The choke is in the **On** position.	1. Move the choke to the **Off** position.
	2. The fuel shutoff valve is not completely open.	2. Open the fuel shutoff valve.

Problem	Possible Causes	Corrective Action
	3. The fuel tank is nearly empty or contains stale fuel.	3. Drain and fill the fuel tank with fresh gasoline (not more than 30 days old). If the problem persists, contact an Authorized Service Dealer.
	4. The spark plug wire is loose.	4. Connect the wire to the spark plug.
	5. The spark plug is pitted, fouled, or the gap is incorrect.	5. Check the spark plug and adjust the gap if necessary. Replace the spark plug if it is pitted, fouled, or cracked.
	6. The engine oil level in the engine crankcase is too low or too high.	6. Add or drain the oil level in the engine crankcase to the **Full** mark on the dipstick.
	7. The air temperature is above 40°F (4°C) and the carburetor heater box is on the snowthrower.	7. Remove the carburetor heater box.
Engine runs, but the snowthrower discharges snow poorly or not at all	1. The throttle is not in the **Fast** position when throwing snow.	1. Move the throttle to the **Fast** position.
	2. The snowthrower is moving too fast to clear the snow.	2. Shift the snowthrower into a lower gear.
	3. You are trying to remove too much snow per swath.	3. Reduce the amount of snow removed for per swath.
	4. You are trying to remove extremely heavy or wet snow.	4. Don’t overload the snowthrower with extremely heavy or wet snow.
	5. The discharge chute is plugged.	5. Stop the engine, wait for all moving parts to stop, and use a stick to remove the snow from the discharge chute.
	6. The auger/impeller drive belt is loose or is off the pulley.	6. Install and/or adjust the auger/impeller drive belt.
	7. The auger/impeller drive belt is worn or broken.	7. Replace the auger/impeller drive belt.
Snowthrower does not properly clear the snow off the surface	1. The tire pressure is low.	1. Check the pressure in the tires and adjust it if necessary.
	2. The skids and/or the scraper is not properly adjusted.	2. Adjust the skids and the scraper.


TORO®