Form No. 3469-369 Rev A

TORO®

Count on it.

Parts Catalog

# Workman® HD

## Utility Vehicle with Bed

**Model No. 07369—Serial No. 417106083 and Up**

Register at www.Toro.com.
Original Instructions (EN)

*3469-369* A

# Ordering Replacement Parts

To order replacement parts, please supply the part number, the quantity, and the description of each part desired.

### Understanding Reference Numbers

Each identified part in an illustration has a reference number. The reference number for a part also appears in the parts list, along with other information about the part.

This catalog uses two special reference number formats, one to indicate parts in a service assembly and another to indicate the quantity of a given part in an illustration.

### Service Assembly Reference Numbers

Parts in service assemblies have reference numbers in the form a:b. The a represents the reference number of the entire service assembly and the b represents a sequential number unique to each part within the service assembly.

For example, a wheel assembly might be identified by reference number 6, the tire by 6:1, the valve by 6:2, and the wheel by 6:3. When you order the assembly identified by reference number 6, you receive all parts identified by reference numbers 6:1,6:2, and 6:3. However, you may also order any part individually. Reference numbers of this type appear in illustration and in parts lists.

### Reference Numbers Indicating Quantity

In an illustration, if a reference number indicates more than one part, the reference number has the form nX y. The n represents the quantity of the part, the X is the multiplication symbol, and the y represents the reference number.

For example, in an illustration, the reference number 2X 37 means that two of the parts identified by reference number 37 are indicated.

# Contents


Front Frame Assembly . . . 4
Rear Frame and Suspension Assembly . . . 5
Rear Axle Assembly . . . 6
Brake Caliper Assembly No. 127-7424 . . . 7
Front and Rear Brake Line Assembly . . . 8
Front Suspension Assembly . . . 9
Steering and Front Wheel Assembly . . . 10
Steering Linkage Assembly . . . 11
Hydraulic Cylinder Assembly No. 112-3217 . . . 12
Front Control Arm Assembly . . . 13
Brake and Clutch Pedal Assembly . . . 14
Master Cylinder Assembly No. 104-6782 . . . 15
Accelerator Pedal Assembly . . . 16
Console Assembly . . . 17
Shift Assembly No. 106-7887 . . . 19
Bumper, Hood and Seat Base Assembly . . . 20
Dash Assembly . . . 21
Steering Hydraulic Assembly . . . 22
Steering Valve Assembly No. 147-3119 . . . 24
Seat Assembly . . . 25
Roll-Over Protection System Assembly . . . 26
Full Bed and Side Panel Assembly . . . 27
Engine Sub Frame Assembly . . . 28
Hydraulic Gear Pump Assembly No. 112-2983 . . . 29
Engine Assembly . . . 30
Muffler Assembly . . . 32
Clutch Linkage Assembly . . . 33
Transaxle Assembly . . . 34
Case Assembly Transaxle Assembly No. 115-7783 . . . 35
Center Plate Assembly Transaxle Assembly No. 115-7783 . . . 36
Main Shaft Assembly Transaxle Assembly No. 115-7783 . . . 37
Reduction Shaft Assembly Transaxle Assembly No. 115-7783 . . . 38
Reverse Shaft Assembly Transaxle Assembly No. 115-7783 . . . 39
Main Shift Assembly Transaxle Assembly No. 115-7783 . . . 40
Hi-Lo Shift Assembly Transaxle Assembly No. 115-7783 . . . 41
Countershaft Assembly Transaxle Assembly No. 115-7783 . . . 42
Differential Gear Assembly Transaxle Assembly No. 115-7783 . . . 43
Differential Carrier Assembly Transaxle Assembly No. 115-7783 . . . 44
Differential Lock Assembly Transaxle Assembly No. 115-7783 . . . 45
Axle Shaft Assembly Transaxle Assembly No. 115-7783 . . . 46
Battery Assembly . . . 47
Tail Light and Fender Assembly . . . 48
Fuel System Assembly . . . 49
Hydraulic Lift Cylinder Assembly . . . 50
Hydraulic Cylinder Assembly No. 133-0620 . . . 52
Lift Valve Assembly . . . 53
Control Valve Assembly No. 43-1950 . . . 54
Front and Rear Wire Harness Assembly . . . 55
Attachments and Accessories . . . 56



**© 2024—The Toro® Company**


**8111 Lyndale Avenue South**
**Bloomington, MN 55420**





**Contact us at www.Toro.com.**
**Printed in the USA.**


**All Rights Reserved**

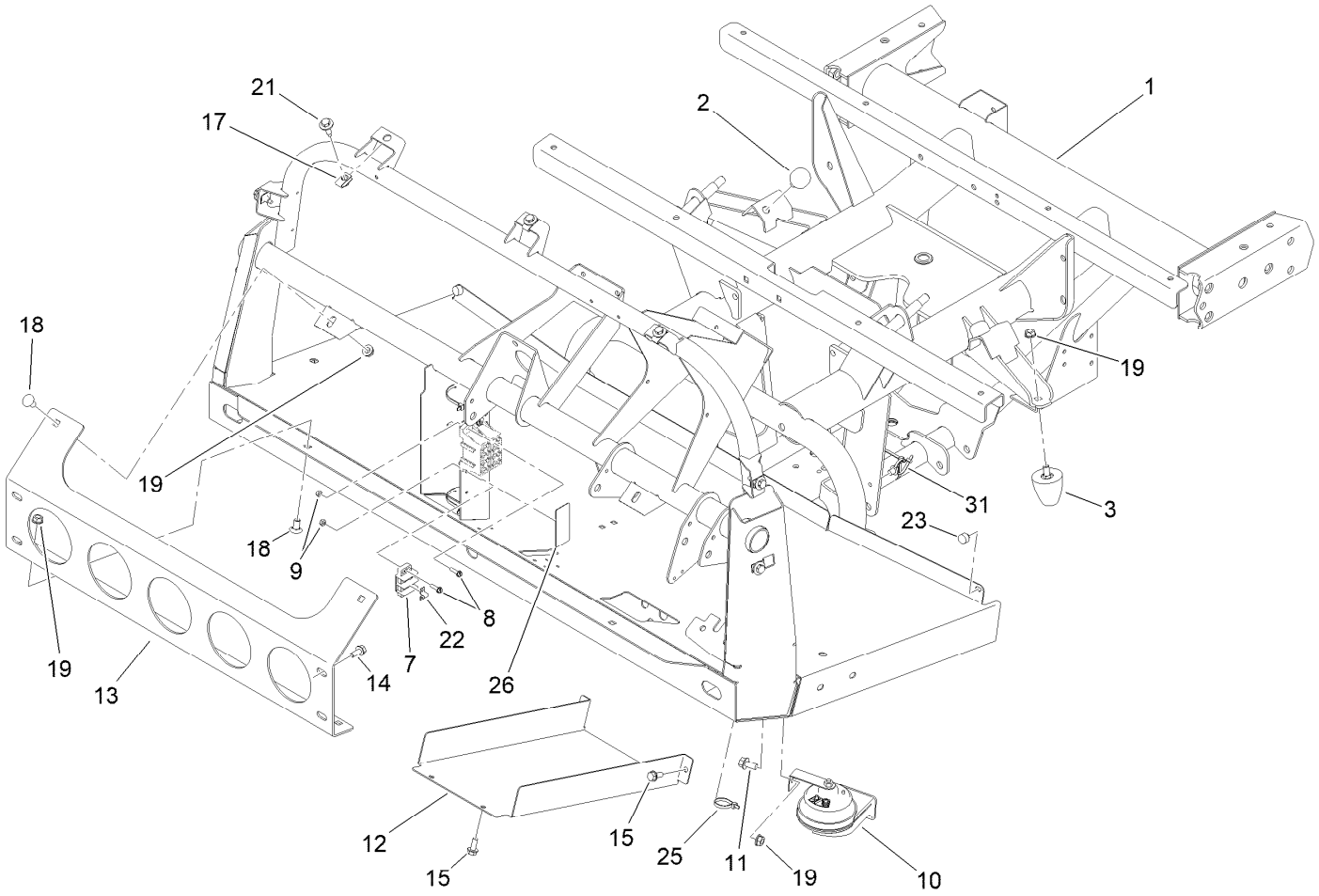


# Front Frame Assembly

| Ref. | Part Number | Qty. | Description |
|---|---|---|---|
| 1 | 138-9251 | 1 | Frame-Front |
| 2 | 87-2440 | 2 | Bumper-Rubber |
| 3 | 26-0071 | 2 | Snubber-Rubber |
| 7 | 42862 | 1 | Block-Terminal, Ground |
| 8 | 32105-13 | 6 | Screw-HWH |
| 9 | 3296-2 | 6 | Nut-Lock, NI |
| 10 | 110-2594 | 1 | Horn |
| 11 | 3234-1 | 1 | Screw-HHF |
| 12 | 106-2427-03 | 1 | Cover |
| 13 | 114-8272-03 | 1 | Bracket-Bumper |
| 14 | 3234-7 | 4 | Screw-HHF |

| Ref. | Part Number | Qty. | Description |
|---|---|---|---|
| 15 | 32144-70 | 4 | Screw-HWHTF |
| 17 | 94-2413 | 7 | Nut-U |
| 18 | 3231-21 | 4 | Screw-CARR |
| 19 | 3290-357 | 7 | Nut-HSF |
| 21 | 114-8418 | 7 | Screw-HWH, Sems |
| 22 | 42863 | 1 | Strip-Jumper |
| 23 | 107-8042 | 2 | Bumper-Rubber |
| 25 | 3290-379 | 9 | Tie-Cable |
| 26 | 145-2286 | 1 | Decal-Fuse Block |
| 31 | 32180-030 | 2 | Clip-Tie |

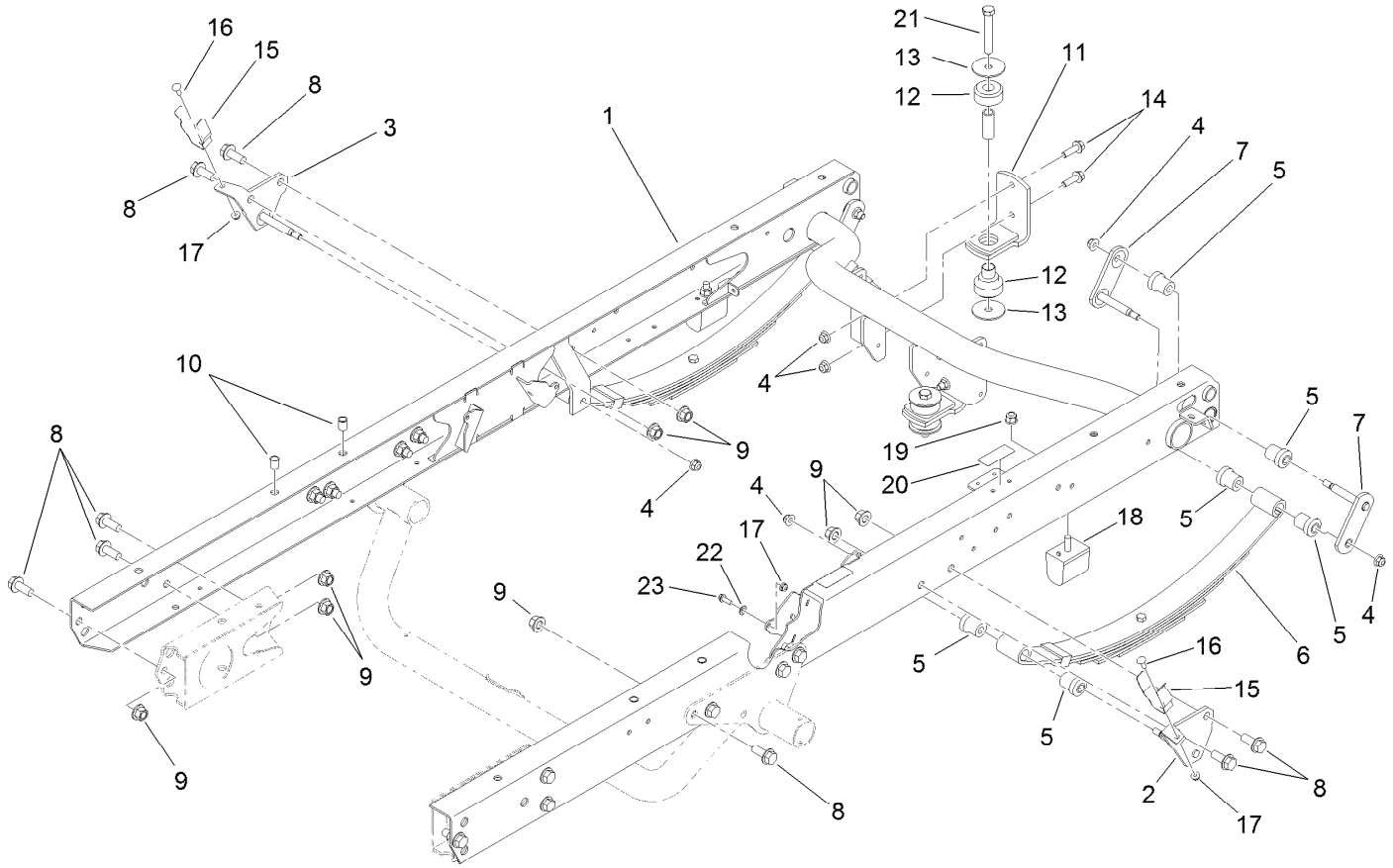


# Rear Frame and Suspension Assembly

| Ref. | Part Number | Qty. | Description |
|---|---|---|---|
| 1 | 115-2255-03 | 1 | Frame-Rear |
| 2 | 131-3474 | 1 | Mount-Spring, LH |
| 3 | 131-3472 | 1 | Mount-Spring, RH |
| 4 | 104-8301 | 10 | Nut-HF, NI |
| 5 | 87-4760 | 12 | Bushing-Rubber |
| 6 | 87-1490 | 2 | Spring-Leaf, Rear |
| 7 | 131-3476 | 4 | Shackle |
| 8 | 3234-38 | 18 | Screw-HHF |
| 9 | 99-5107 | 18 | Nut-Lock |
| 10 | 32148-9 | 4 | Nut-Clinch |
| 11 | 87-5800-03 | 2 | Mount-Transaxle |
| 12 | 106-7865 | 2 | Mount-Engine |

| Ref. | Part Number | Qty. | Description |
|---|---|---|---|
| 13 | 87-5100 | 4 | Washer-Snubbing |
| 14 | 3234-24 | 4 | Screw-HHF |
| 15 | 108-3109 | 2 | Retainer-Cylinder |
| 16 | 3229-1 | 2 | Screw-CARR |
| 17 | 104-7201 | 3 | Nut-HF, NI |
| 18 | 87-3470 | 2 | Bumper |
| 19 | 103-9511 | 2 | Nut-Lock, NI |
| 20 | 115-2047 | 2 | Decal-Surface, Hot |
| 21 | 33116-080 | 2 | Screw-HH |
| 22 | 119-8952 | 1 | Washer-Spcl |
| 23 | 321-3 | 1 | Screw-HH |

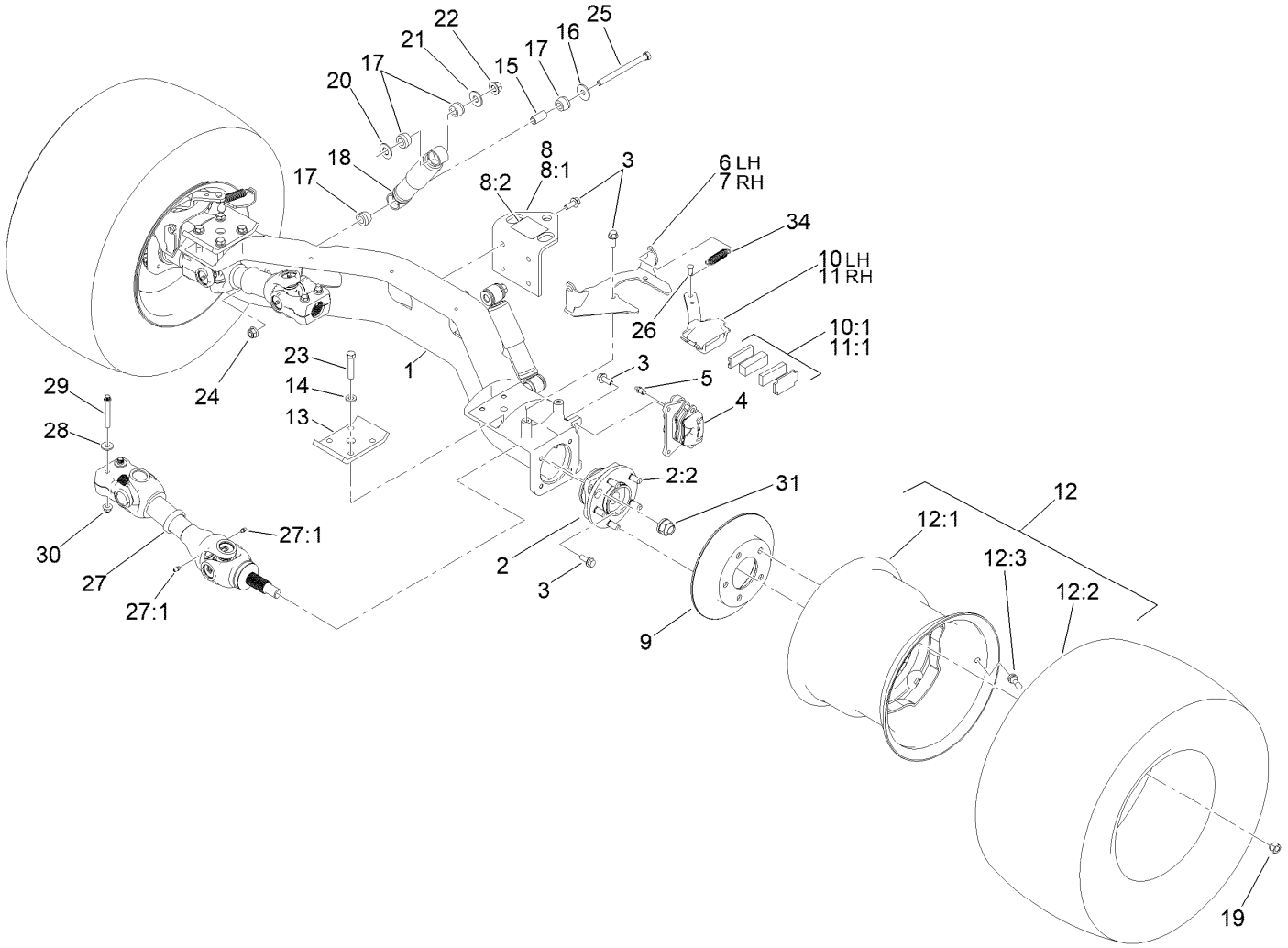


# Rear Axle Assembly

| Ref. | Part Number | Qty. | Description |
|---|---|---|---|
| 1 | 144-2176 | 1 | Axle-Rear |
| 2 | 121-9751 | 2 | Hub-Bearing, Wheel |
| 2:2 | 121-9752 | 5 | Stud-Wheel |
| 3 | 3234-11 | 20 | Screw-HHF |
| 4 | 127-7424 | 2 | Brake Caliper ASM |
| 5 | 119-9509 | 2 | Screw-Bleed |
| 6 | 115-2362-0P | 1 | Bracket ASM-Caliper, LH |
| 7 | 115-2359-0P | 1 | Bracket ASM-Caliper, RH |
| 8 | 115-7742 | 1 | Hitch ASM |
| 8:1 | 92-5951-03 | 1 | Angle-Hitch |
| 8:2 | 136-1163 | 1 | Decal-Load, Towing |
| 9 | 114-8351 | 2 | Rotor-Brake |
| 10 | 114-8365 | 1 | Caliper-Mechanical, LH |
| 10:1 | 115-7847 | 1 | Parking Brake Pad Kit |
| 11 | 114-8366 | 1 | Caliper-Mechanical, RH |
| 11:1 | 115-7847 | 1 | Parking Brake Pad Kit |
| 12 | 147-2771 | 2 | Wheel And Tire ASM |
| 12:1 | 147-2772 | 1 | Wheel |
| 12:2 | 131-6673 | 1 | Tire-Rear |
| 12:3 | 232-27 | 1 | Stem-Valve |
| 13 | 87-7470-0P | 2 | Plate - Sprg Clamp *b |

| Ref. | Part Number | Qty. | Description |
|---|---|---|---|
| 14 | 87-7480 | 8 | Washer |
| 15 | 87-3600 | 2 | Spacer-Absorber, Shock |
| 16 | 87-5330 | 2 | Washer |
| 17 | 87-3920 | 8 | Bushing |
| 18 | 121-9774 | 2 | Absorber-Shock |
| 19 | 242-50 | 10 | Nut-Lug |
| 20 | 3256-27 | 2 | Washer-Flat |
| 21 | 3256-6 | 2 | Washer-Flat |
| 22 | 99-5107 | 2 | Nut-Lock |
| 23 | 115-2398 | 8 | Bolt-HH |
| 24 | 114-8417 | 2 | Nut-HF, NI |
| 25 | 114-8424 | 2 | Screw-HH |
| 26 | 283-85 | 2 | Pin-Clevis |
| 27 | 138-5600 | 2 | Driveshaft ASM |
| 27:1 | 302-5 | 2 | Fitting-Grease |
| 28 | 80-6990 | 4 | Washer-Hardened |
| 29 | 98-2939 | 4 | Screw-Cap |
| 30 | 104-8301 | 4 | Nut-HF, NI |
| 31 | 115-2164 | 2 | Nut-Spindle |
| 34 | 104-6415 | 2 | Spring-Return, Pedal |

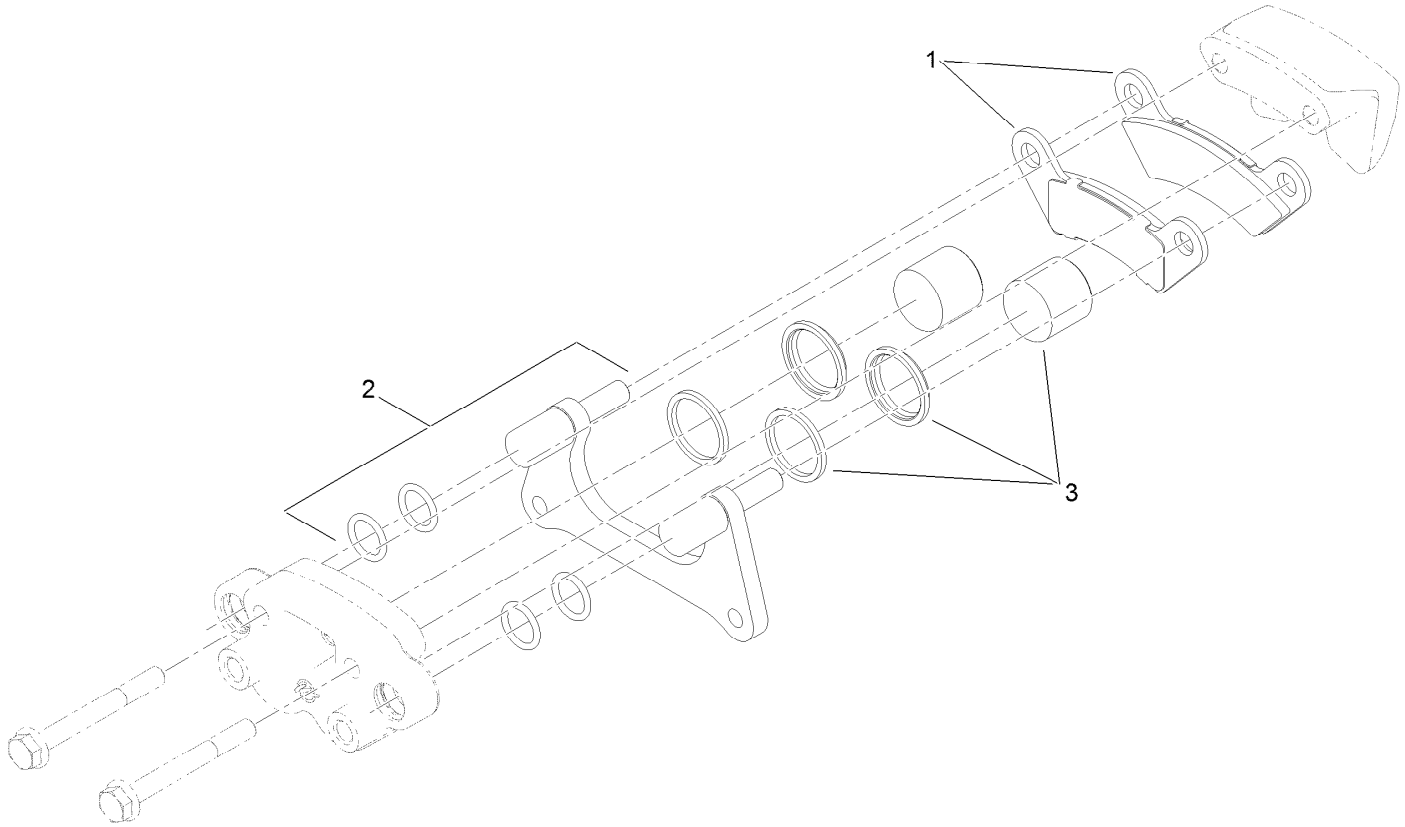


# Brake Caliper Assembly No. 127-7424

| *Ref.* | *Part Number* | *Qty.* | *Description* |
|---|---|---|---|
| 1 | 133-0628 | 1 | Brake Pad Kit |
| 2 | 119-9511 | 1 | Bracket Kit |
| 3 | 133-0614 | 1 | Piston Kit |

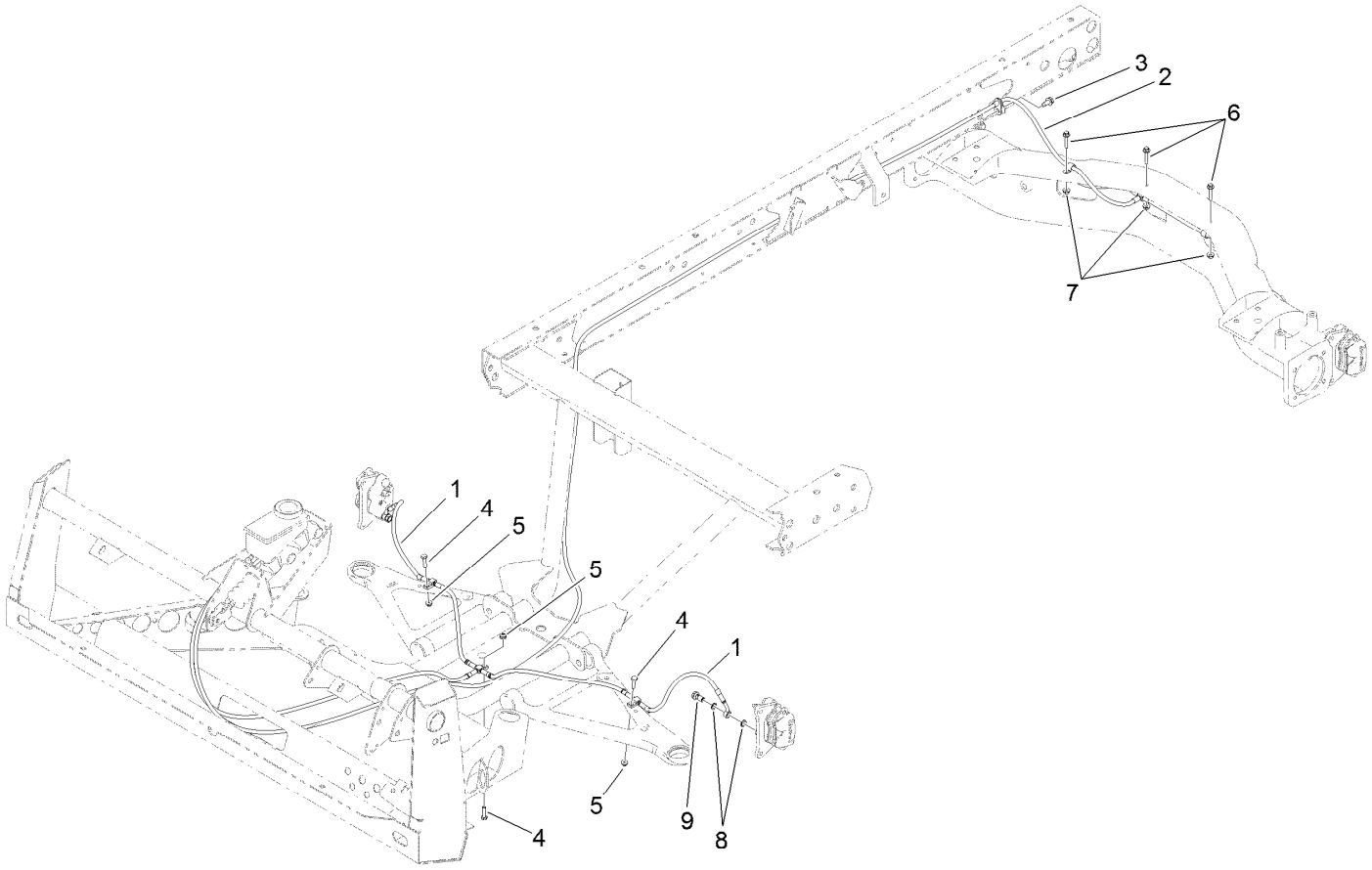


# Front and Rear Brake Line Assembly

| *Ref.* | *Part Number* | *Qty.* | *Description* |
|---|---|---|---|
| 1 | 119-9682 | 1 | Front Brake Line ASM |
| 2 | 119-9681 | 1 | Rear Brake Line ASM |
| 3 | 32144-70 | 1 | Screw-HWHTF |
| 4 | 321-6 | 3 | Screw-HH |
| 5 | 104-7201 | 3 | Nut-HF, NI |
| 6 | 3234-21 | 3 | Screw-HHF |
| 7 | 32128-33 | 3 | Nut-HF |
| 8 | 115-2341 | 8 | Washer-Banjo |
| 9 | 120-4875 | 4 | Bolt-Flange, Banjo |

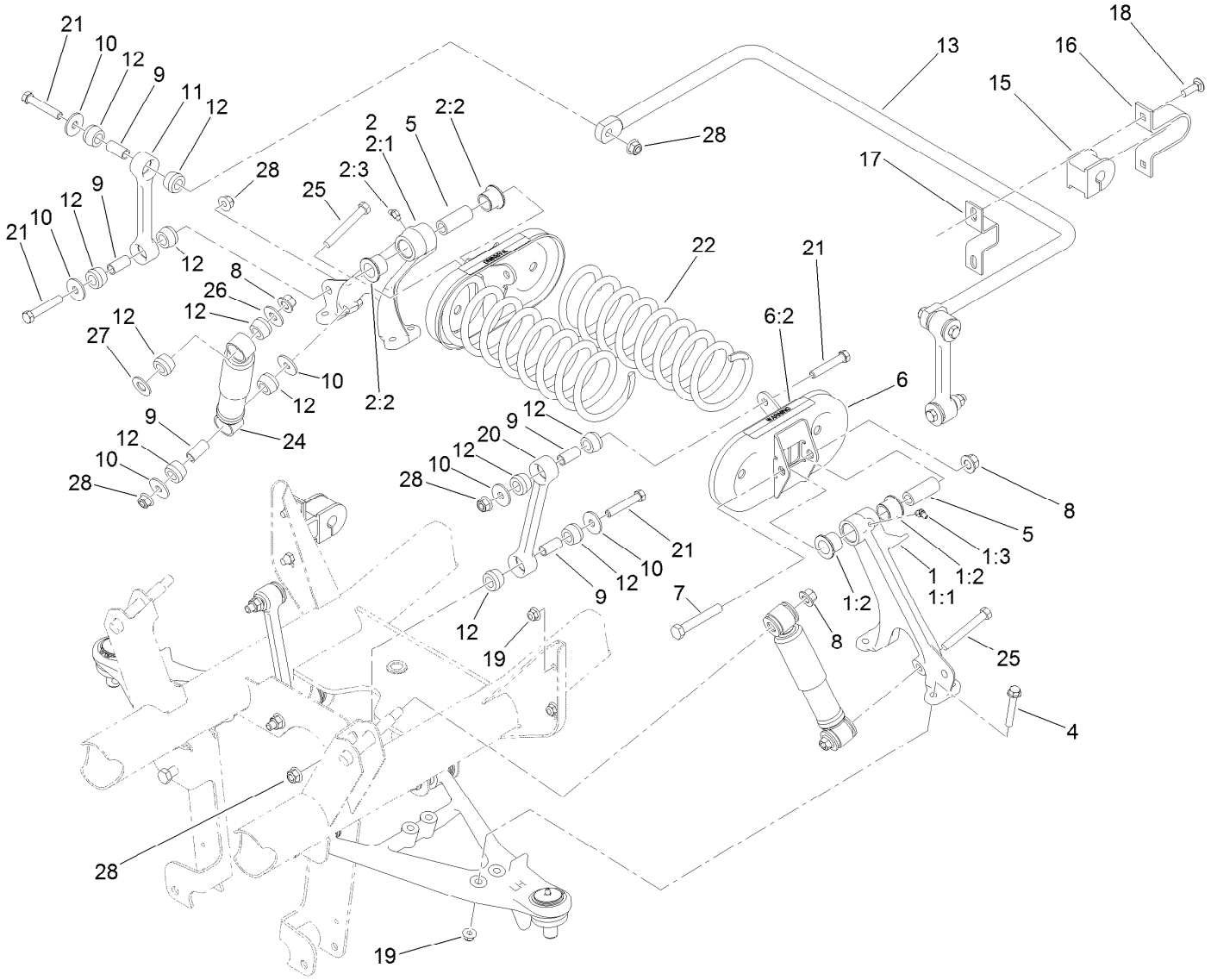


# Front Suspension Assembly

| Ref. | Part Number | Qty. | Description |
|---|---|---|---|
| 1 | 137-1693 | 1 | Control Arm-LH |
| 1:1 | 87-0160-03 | 1 | Tower-Control Arm, LH |
| 1:2 | 33-3090 | 2 | Bushing |
| 1:3 | 302-11 | 1 | Fitting-Lube, 45 DEG |
| 2 | 137-1692 | 1 | Control Arm-RH |
| 2:1 | 87-0150-03 | 1 | Tower-Control Arm, RH |
| 2:2 | 33-3090 | 2 | Bushing |
| 2:3 | 302-11 | 1 | Fitting-Lube, 45 DEG |
| 4 | 3234-39 | 8 | Screw-HHF |
| 5 | 87-2500 | 2 | Sleeve-Spring, Pivot |
| 6 | 105-7958 | 2 | Spring Cradle ASM |
| 6:2 | 93-9879 | 1 | Decal-Warning |
| 7 | 325-13 | 2 | Screw-HH |
| 8 | 99-5107 | 4 | Nut-Lock |
| 9 | 87-3600 | 10 | Spacer-Absorber, Shock |
| 10 | 87-5330 | 12 | Washer |

| Ref. | Part Number | Qty. | Description |
|---|---|---|---|
| 11 | 119-6725 | 2 | Link, Anti-Sway Bar |
| 12 | 87-3920 | 24 | Bushing |
| 13 | 133-0633-0P | 1 | Bar-Anti-Sway, HD |
| 15 | 87-3910 | 2 | Bushing-Rubber |
| 16 | 87-4010 | 2 | Clamp, Anti-Sway Bar |
| 17 | 87-3890 | 2 | Bracket, Anti-Sway Bar |
| 18 | 3231-25 | 4 | Bolt-CARR |
| 19 | 104-8301 | 12 | Nut-HF, NI |
| 20 | 119-6724 | 2 | Link-Stabilizer |
| 21 | 324-10 | 8 | Screw-HH |
| 22 | 140-2566 | 2 | Spring-Compression |
| 24 | 121-9774 | 2 | Absorber-Shock |
| 25 | 324-13 | 2 | Screw-HH |
| 26 | 3256-6 | 2 | Washer-Flat |
| 27 | 3256-27 | 2 | Washer-Flat |
| 28 | 114-8417 | 10 | Nut-HF, NI |

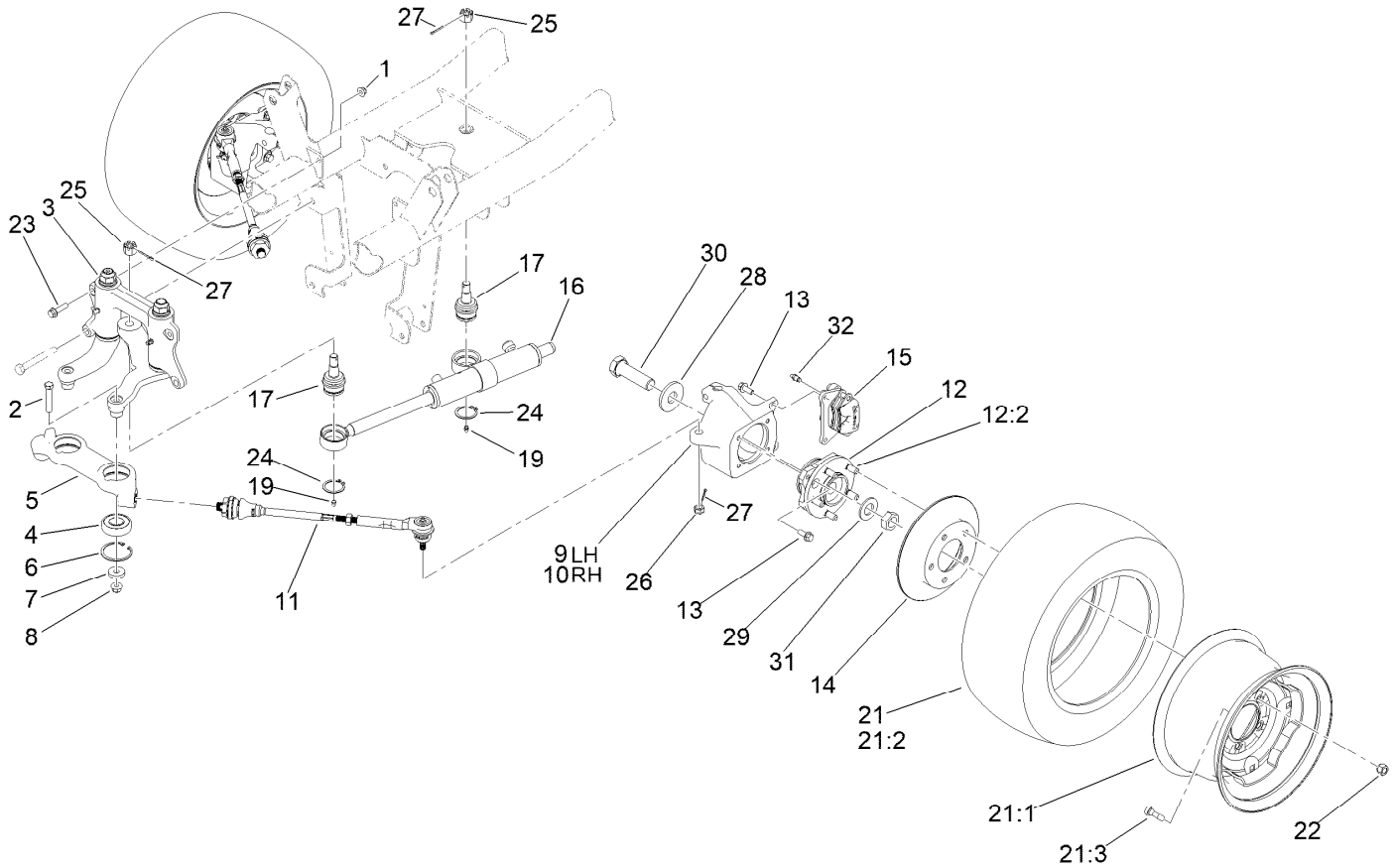


# Steering and Front Wheel Assembly

| Ref. | Part Number | Qty. | Description |
|---|---|---|---|
| 1 | 104-8301 | 2 | Nut-HF, NI |
| 2 | 324-10 | 2 | Screw-HH |
| 3 | | 1 | Steering Linkage ASM ● |
| 4 | 119-9548 | 2 | Bearing-Ball |
| 5 | 114-8296 | 1 | Link-Center |
| 6 | 32120-22 | 2 | Ring-Snap, Internal |
| 7 | 112843 | 2 | Washer |
| 8 | 114-8417 | 2 | Nut-HF, NI |
| 9 | 119-9513 | 1 | Knuckle-LH |
| 10 | 119-9514 | 1 | Knuckle-RH |
| 11 | 114-8356 | 2 | Tie Rod ASM |
| 12 | 121-9751 | 2 | Hub-Bearing, Wheel |
| 12:2 | 121-9752 | 5 | Stud-Wheel |
| 13 | 3234-11 | 12 | Screw-HHF |
| 14 | 114-8351 | 2 | Rotor-Brake |
| 15 | 127-7424 | 2 | Brake Caliper ASM |
| 16 | 112-3217 | 1 | HYD Cylinder ASM |

| Ref. | Part Number | Qty. | Description |
|---|---|---|---|
| 17 | 106-6774 | 2 | Joint-Ball |
| 19 | 302-5 | 2 | Fitting-Grease |
| 21 | 147-2769 | 2 | Wheel And Tire ASM |
| 21:1 | 147-2770 | 1 | Wheel |
| 21:2 | 131-6670 | 1 | Tire |
| 21:3 | 232-27 | 1 | Stem-Valve |
| 22 | 242-50 | 10 | Nut-Lug |
| 23 | 114-4681 | 2 | Screw-HHF |
| 24 | 32151-104 | 2 | Ring-Retaining, External |
| 25 | 32136-14 | 2 | Nut-Hst |
| 26 | 32136-3 | 2 | Nut-SHH |
| 27 | 3272-11 | 4 | Pin-Cotter |
| 28 | 104-0719 | 2 | Washer-Hardened |
| 29 | 3256-62 | 2 | Washer-Flat |
| 30 | 115-2173 | 2 | Screw-HH |
| 31 | 3296-49 | 2 | Nut-Lock, NI |
| 32 | 119-9509 | 2 | Screw-Bleed |

● Not serviced separately

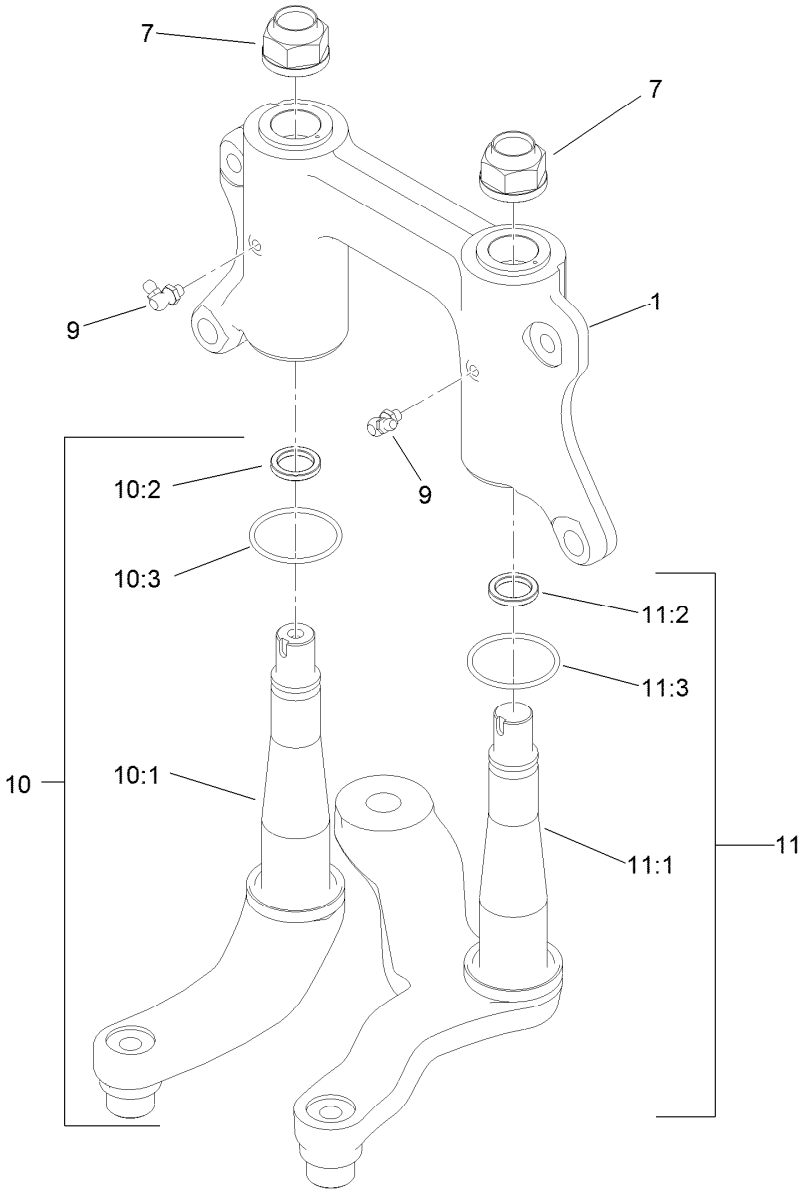


# Steering Linkage Assembly

| *Ref.* | *Part Number* | *Qty.* | *Description* |
|---|---|---|---|
| 1 | 132-6767 | 1 | Mount-Pivot, W/Bushings |
| 7 | 115-2164 | 2 | Nut-Spindle |
| 9 | 302-60 | 2 | Fitting-Grease |
| 10 | 132-0794 | 1 | Idler Arm ASM |
| 10:1 | 132-0792 | 1 | Idler Arm And Thrust Washer ASM |
| 10:2 | 93-7510 | 1 | Ring-Quad |
| 10:3 | 131-3499 | 1 | O-Ring |
| 11 | 132-0795 | 1 | Pitman Arm ASM |
| 11:1 | 132-0793 | 1 | Pitman Arm And Thrust Washer ASM |
| 11:2 | 93-7510 | 1 | Ring-Quad |
| 11:3 | 131-3499 | 1 | O-Ring |

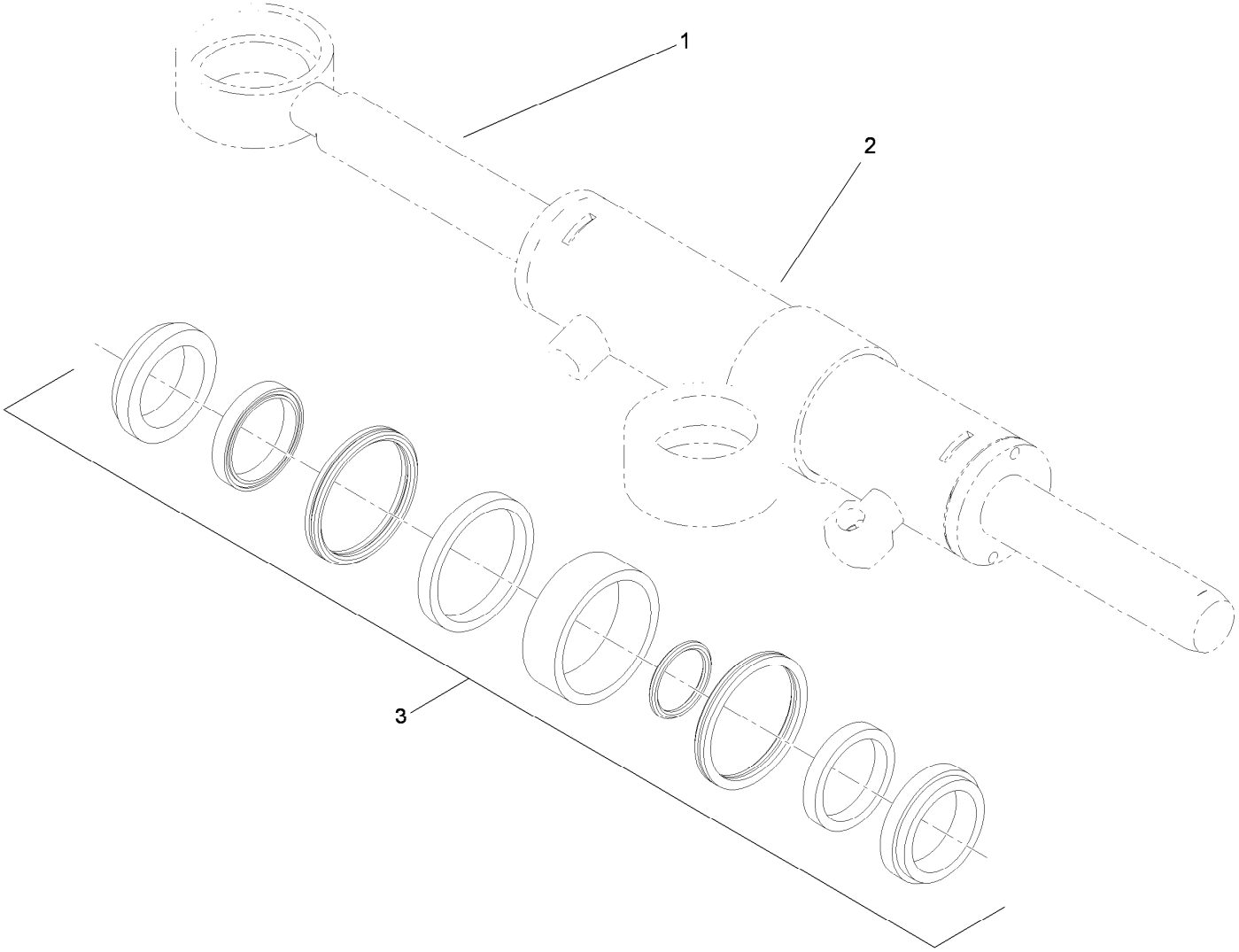


# Hydraulic Cylinder Assembly No. 112-3217

| Ref. | Part Number | Qty. | Description |
|---|---|---|---|
| 1 | | 1 | Rod-Cylinder ● |
| 2 | | 1 | Body-Cylinder ● |
| 3 | 115-2160 | 1 | Cylinder Repair Kit |

● Not serviced separately

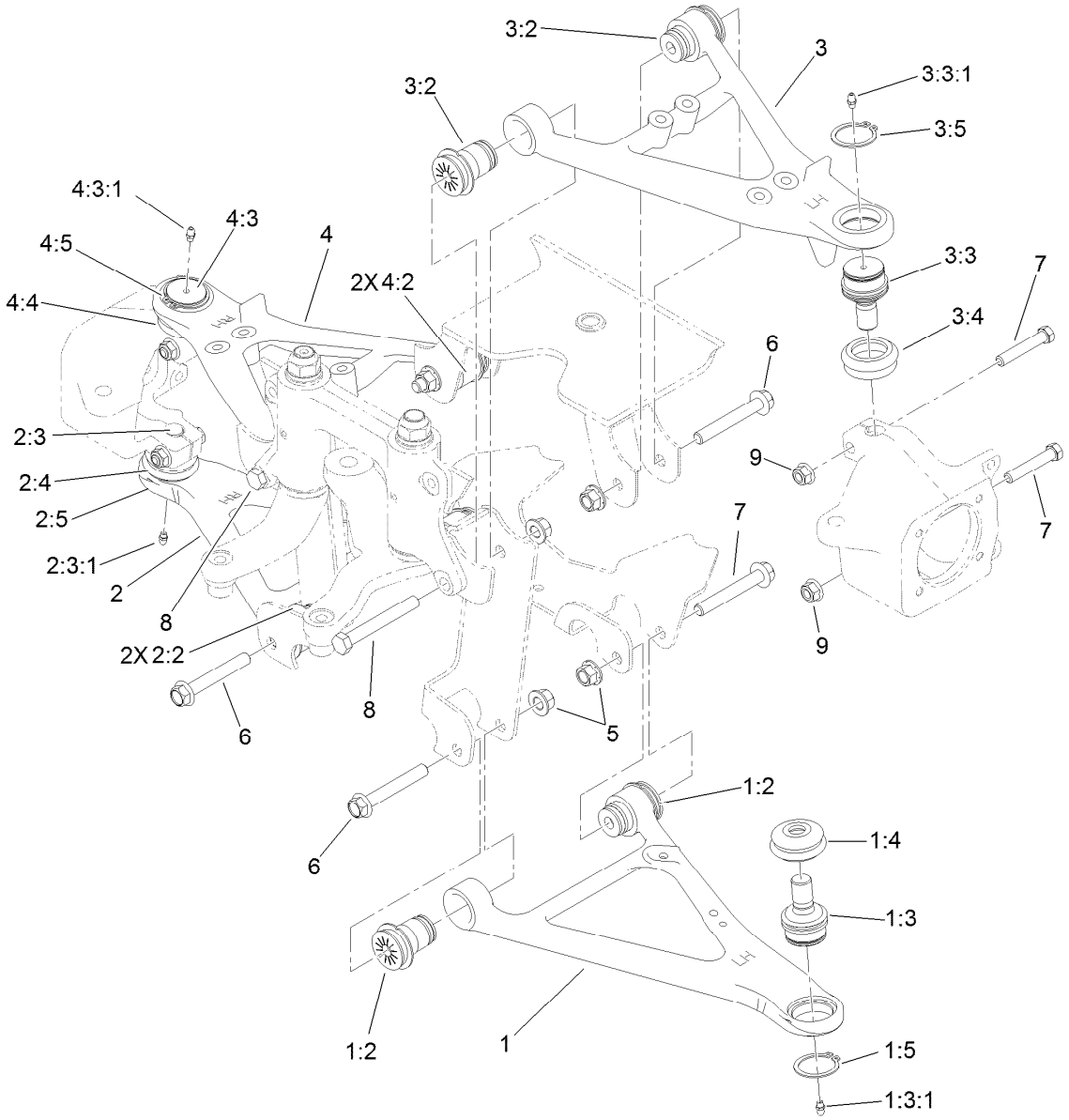


# Front Control Arm Assembly

| Ref. | Part Number | Qty. | Description |
|---|---|---|---|
| 1 | 115-2405 | 1 | Lower LH Control Arm ASM |
| 1:2 | 87-1450 | 2 | Bushing-Flange |
| 1:3 | 115-2165 | 1 | Ball Joint |
| 1:3:1 | 302-5 | 1 | Fitting-Grease |
| 1:4 | 87-2420 | 1 | Seal-Joint, Ball |
| 1:5 | 32151-104 | 1 | Ring-Retaining, External |
| 2 | 115-2407 | 1 | Lower RH Control Arm ASM |
| 2:2 | 87-1450 | 2 | Bushing-Flange |
| 2:3 | 115-2165 | 1 | Ball Joint |
| 2:3:1 | 302-5 | 1 | Fitting-Grease |
| 2:4 | 87-2420 | 1 | Seal-Joint, Ball |
| 2:5 | 32151-104 | 1 | Ring-Retaining, External |
| 3 | 115-2404 | 1 | Upper LH Control Arm ASM |
| 3:2 | 87-1450 | 2 | Bushing-Flange |
| 3:3 | 115-2165 | 1 | Ball Joint |

| Ref. | Part Number | Qty. | Description |
|---|---|---|---|
| 3:3:1 | 302-5 | 1 | Fitting-Grease |
| 3:4 | 87-2420 | 1 | Seal-Joint, Ball |
| 3:5 | 32151-104 | 1 | Ring-Retaining, External |
| 4 | 115-2406 | 1 | Upper RH Control Arm ASM |
| 4:2 | 87-1450 | 2 | Bushing-Flange |
| 4:3 | 115-2165 | 1 | Ball Joint |
| 4:3:1 | 302-5 | 1 | Fitting-Grease |
| 4:4 | 87-2420 | 1 | Seal-Joint, Ball |
| 4:5 | 32151-104 | 1 | Ring-Retaining, External |
| 5 | 99-5107 | 8 | Nut-Lock |
| 6 | 114-8419 | 6 | Screw-HHF |
| 7 | 324-10 | 4 | Screw-HH |
| 8 | 325-17 | 2 | Screw-HH |
| 9 | 114-8417 | 4 | Nut-HF, NI |

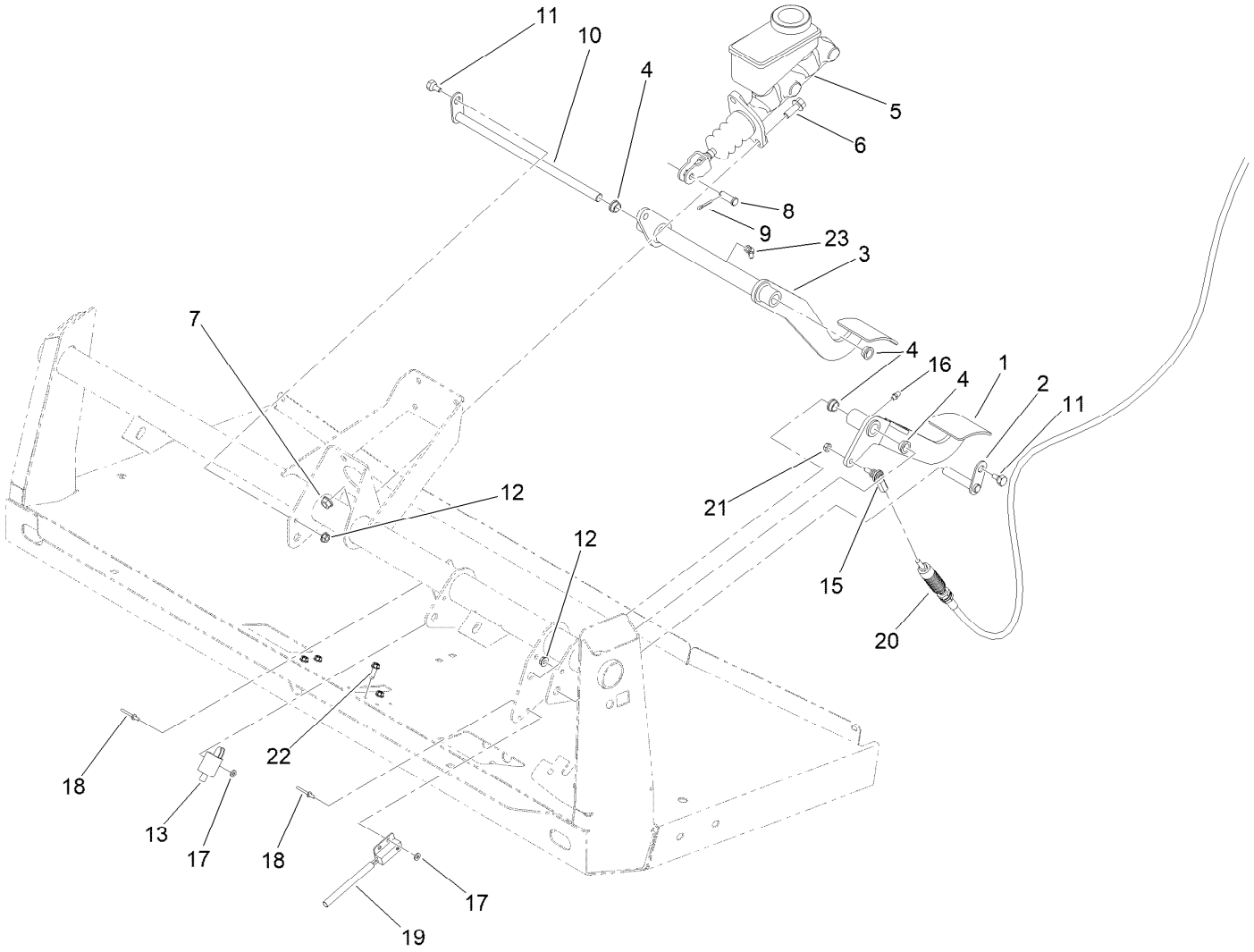


# Brake and Clutch Pedal Assembly

| Ref. | Part Number | Qty. | Description |
|---|---|---|---|
| 1 | 127-7357-03 | 1 | Pedal-Clutch |
| 2 | 115-2269 | 1 | Pin-Pivot |
| 3 | 120-5023-03 | 1 | Pedal-Brake |
| 4 | 256-156 | 4 | Bushing-Flange |
| 5 | 104-6782 | 1 | Master Cylinder ASM |
| 6 | 3234-11 | 2 | Screw-HHF |
| 7 | 104-8301 | 2 | Nut-HF, NI |
| 8 | 283-2 | 1 | Pin-Clevis |
| 9 | 3272-10 | 1 | Pin-Cotter |
| 10 | 137-6729 | 1 | Shaft-Brake |
| 11 | 63-3410 | 2 | Screw-Shoulder |

| Ref. | Part Number | Qty. | Description |
|---|---|---|---|
| 12 | 32128-33 | 2 | Nut-HF |
| 13 | 95-1653 | 1 | Switch-Pole, Single |
| 15 | 110-2554 | 1 | Rod End-Spherical |
| 16 | 302-5 | 1 | Fitting-Grease |
| 17 | 3256-21 | 4 | Washer-Flat |
| 18 | 3269-25 | 4 | Rivet-Pop |
| 19 | 105-0023 | 1 | Switch-Proximity |
| 20 | 115-2284 | 1 | Cable-Clutch |
| 21 | 3296-13 | 1 | Nut-Lock, NI |
| 22 | 49-2040 | 4 | Screw-HWHTF |
| 23 | 302-60 | 1 | Fitting-Grease |

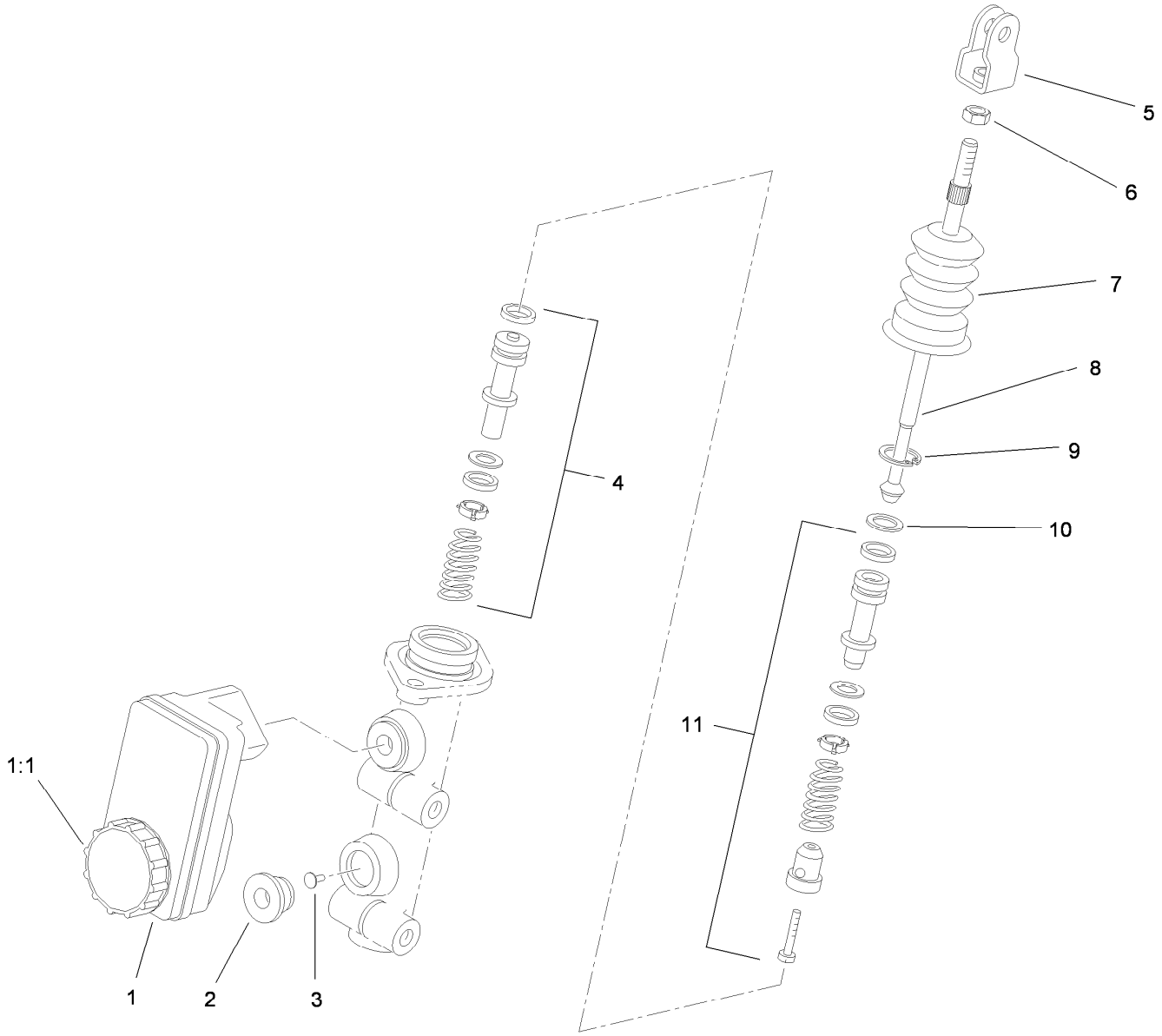


# Master Cylinder Assembly No. 104-6782

| *Ref.* | *Part Number* | *Qty.* | *Description* |
|---|---|---|---|
| 1 | 104-6845 | 1 | Reservoir ASM |
| 1:1 | 92-4112 | 1 | Cap ASM |
| 2 | 93-8971 | 2 | Seal-Port, Flange |
| 3 | 92-4103 | 1 | Pin-Stop |
| 4 | 92-4102 | 1 | Secondary Piston ASM |
| 5 | 92-4110 | 1 | Clevis |
| 6 | 21-0360 | 1 | Nut-Hex |
| 7 | 94-5209 | 1 | Cover-Dust |
| 8 | 94-5210 | 1 | Rod-Push |
| 9 | 92-4109 | 1 | Ring-Snap |
| 10 | 92-4108 | 1 | Retainer-Washer |
| 11 | 92-4101 | 1 | Primary Piston ASM |

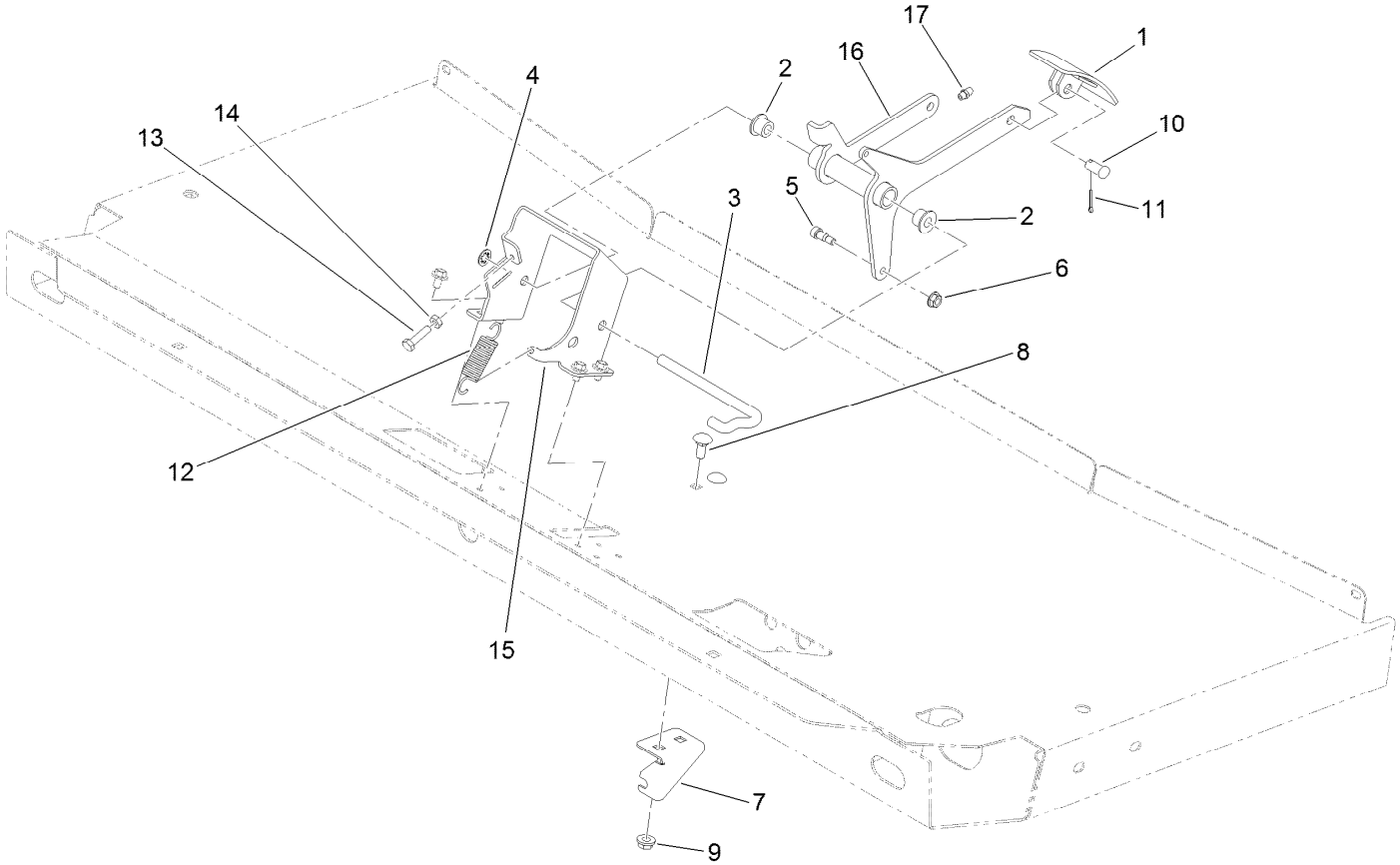


# Accelerator Pedal Assembly

| Ref. | Part Number | Qty. | Description |
|---|---|---|---|
| 1 | 93-8969-03 | 1 | Pedal |
| 2 | 256-259 | 2 | Bushing-Flange |
| 3 | 87-2880 | 1 | Shaft-Pedal, Accelerator |
| 4 | 32151-56 | 1 | Ring-Retaining, External |
| 5 | 119-4881 | 1 | Bolt-Shoulder |
| 6 | 32128-33 | 1 | Nut-HF |
| 7 | 120-4982 | 1 | Bracket-Mount, Cable |
| 8 | 3230-1 | 2 | Bolt-CARR |
| 9 | 32128-20 | 2 | Nut-HF |
| 10 | 283-85 | 1 | Pin-Clevis |
| 11 | 3272-6 | 1 | Pin-Cotter |
| 12 | 67-1450 | 1 | Spring-Idler |
| 13 | 321-6 | 1 | Screw-HH |
| 14 | 3218-1 | 1 | Nut-Jam |
| 15 | 127-8625-03 | 1 | Bracket-Mount, Pedal |
| 16 | 120-4983-03 | 1 | Pedal-Accelerator |
| 17 | 302-5 | 1 | Fitting-Grease |

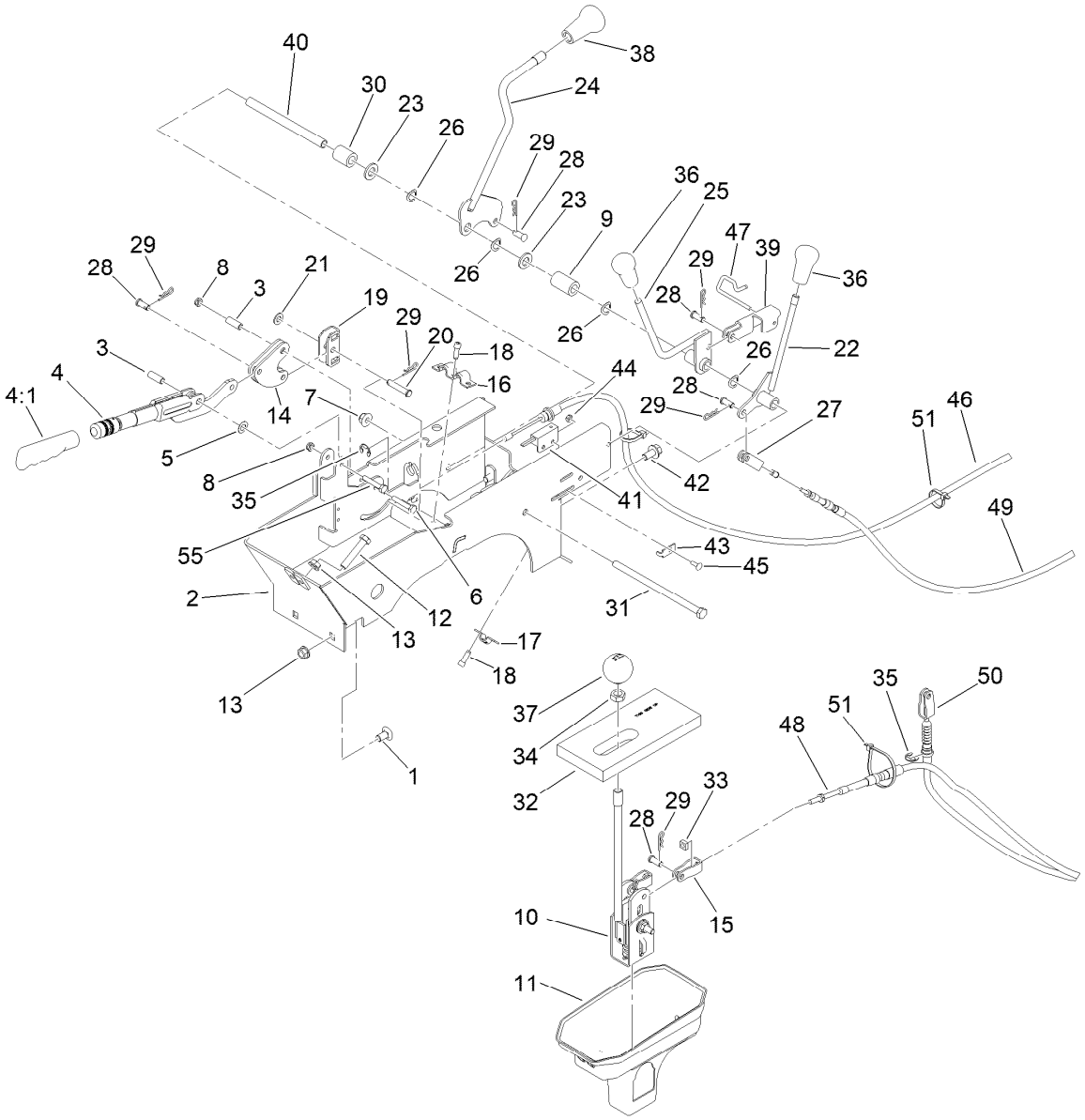


# Console Assembly

| Ref. | Part Number | Qty. | Description |
|---|---|---|---|
| 1 | 3231-21 | 2 | Screw-CARR |
| 2 | 108-6914-03 | 1 | Support-Lever |
| 3 | 114402 | 2 | Spacer |
| 4 | 127-8863 | 1 | Lever-Brake, Park |
| 4:1 | 127-8864 | 1 | Grip-Handle |
| 5 | 3290-477 | 1 | Washer-Curved |
| 6 | 321-37 | 1 | Screw-HH |
| 7 | 104-8301 | 1 | Nut-HF, NI |
| 8 | 3296-56 | 2 | Nut-Lock, NI |
| 9 | 120-5037 | 1 | Spacer |
| 10 | 106-7887 | 1 | Shift ASM |
| 11 | 106-2376 | 1 | Boot-Shift, Lower |
| 12 | 323-10 | 2 | Screw-HH |
| 13 | 3290-357 | 4 | Nut-HSF |
| 14 | 106-7814 | 2 | Bellcrank |
| 15 | 87-2310 | 2 | Clevis-Cable |
| 16 | 87-4960 | 1 | Clamp-Cable |
| 17 | 87-4340 | 1 | Clamp-Cable |
| 18 | 65-5221 | 5 | Screw-Hshtf |
| 19 | 87-3480 | 1 | Bracket-Equalizer, Cable |
| 20 | 94-3829 | 1 | Pin-Clevis |

| Ref. | Part Number | Qty. | Description |
|---|---|---|---|
| 21 | 3256-23 | 1 | Washer-Plain |
| 22 | 106-7828 | 1 | Lever |
| 23 | 33096-00 | 2 | Washer-Flat |
| 24 | 131-3479 | 1 | Lever-Lock, Differential |
| 25 | 106-7960 | 1 | Lever-HYD |
| 26 | 3290-221 | 4 | Washer-Spring |
| 27 | 87-7160 | 1 | Clevis-Cable |
| 28 | 283-62 | 6 | Pin-Clevis |
| 29 | 3290-307 | 7 | Pin-Cotter |
| 30 | 66-6501 | 1 | Spacer-Wheel |
| 31 | 323-36 | 1 | Screw-HH |
| 32 | 87-6570 | 1 | Seal-Boot, Lower |
| 33 | 140-4804 | 2 | Nut-Square |
| 34 | 3218-18 | 1 | Nut-Jam |
| 35 | 32120-47 | 3 | Ring-Retaining, External |
| 36 | 106-7903 | 2 | Knob-Control |
| 37 | 87-6720 | 1 | Knob-Shift |
| 38 | 106-7952 | 1 | Knob |
| 39 | 115-2250 | 1 | Link |
| 40 | 106-7833 | 1 | Spacer |
| 41 | 100-1270 | 1 | Switch-Proximity |

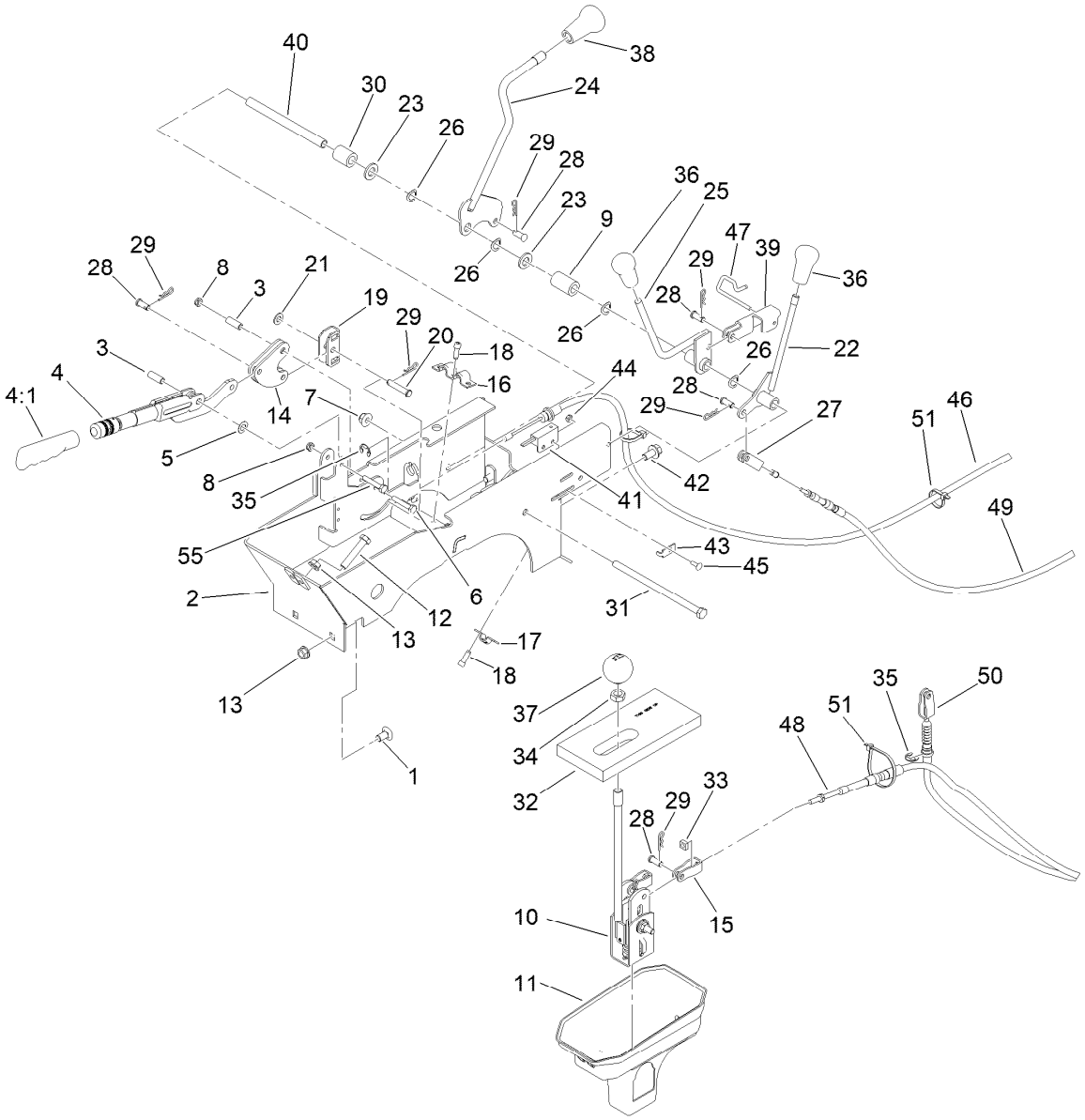


# Console Assembly (continued)

| Ref. | Part Number | Qty. | Description |
|---|---|---|---|
| 42 | 3234-12 | 2 | Screw-HHF |
| 43 | 100-4872 | 1 | Plate-Switch, Neutral |
| 44 | 3296-2 | 1 | Nut-Lock, NI |
| 45 | 3229-34 | 1 | Screw-CARR |
| 46 | 115-2283 | 2 | Cable-Brake, Park |
| 47 | 115-2350 | 1 | Pin-Retainer |

| Ref. | Part Number | Qty. | Description |
|---|---|---|---|
| 48 | 115-7811 | 2 | Cable-Selector, Gear |
| 49 | 115-7812 | 1 | Cable-Hi Low |
| 50 | 115-2287 | 1 | Cable-Lock, Differential |
| 51 | 3290-379 | 5 | Tie-Cable |
| 55 | 321-9 | 1 | Screw-HH |

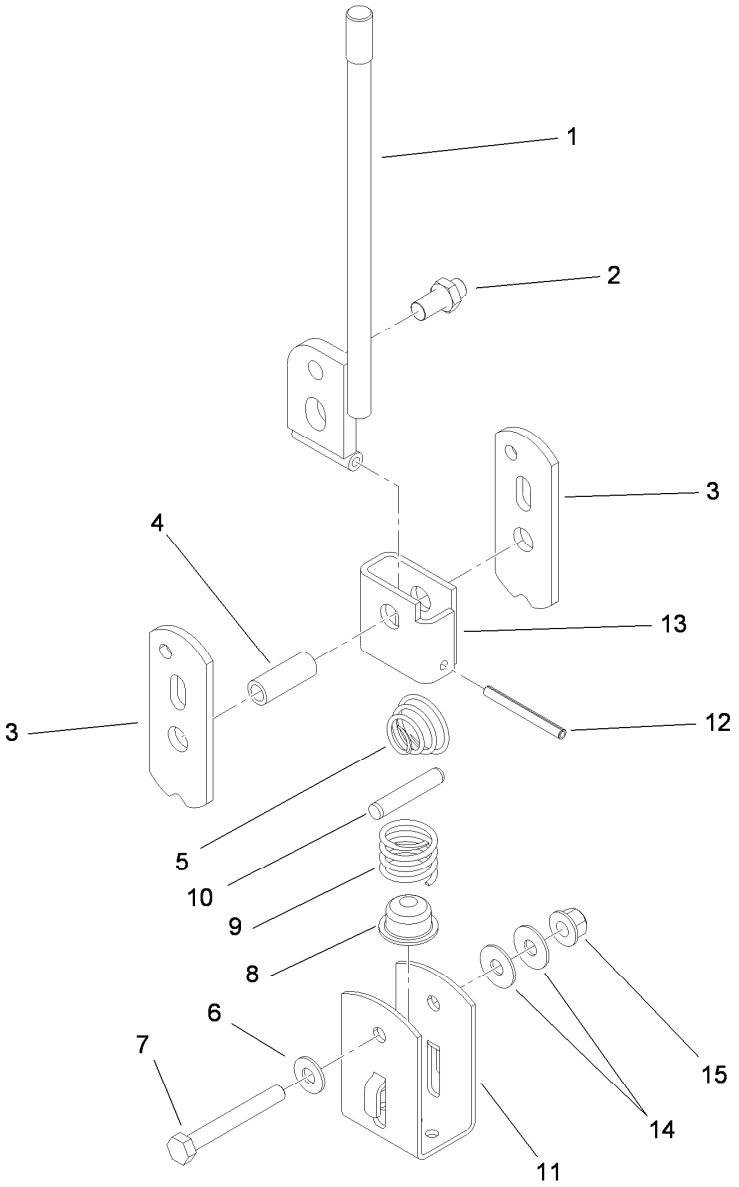


# Shift Assembly No. 106-7887

| Ref. | Part Number | Qty. | Description |
|---|---|---|---|
| 1 | 131-3469 | 1 | Lever-Shift |
| 2 | 87-3650 | 1 | Pin-Shift |
| 3 | 87-3540 | 2 | Link-Shift |
| 4 | 87-2520 | 1 | Tube-Pivot |
| 5 | 87-2900 | 1 | Spring-Compression |
| 6 | 87-8640 | 1 | Washer-Flat |
| 7 | 322-12 | 1 | Screw-HH |
| 8 | 87-3530 | 1 | Button-Shifter |
| 9 | 87-3660 | 1 | Spring-Compression |
| 10 | 3290-507 | 1 | Pin-Dowel |
| 11 | 87-3520 | 1 | Clevis |
| 12 | 32121-48 | 1 | Pin-Spring |
| 13 | 87-6040 | 1 | Bracket-Shifter |
| 14 | 3290-456 | 2 | Washer-Belleville |
| 15 | 104-8300 | 1 | Nut-HF, NI |

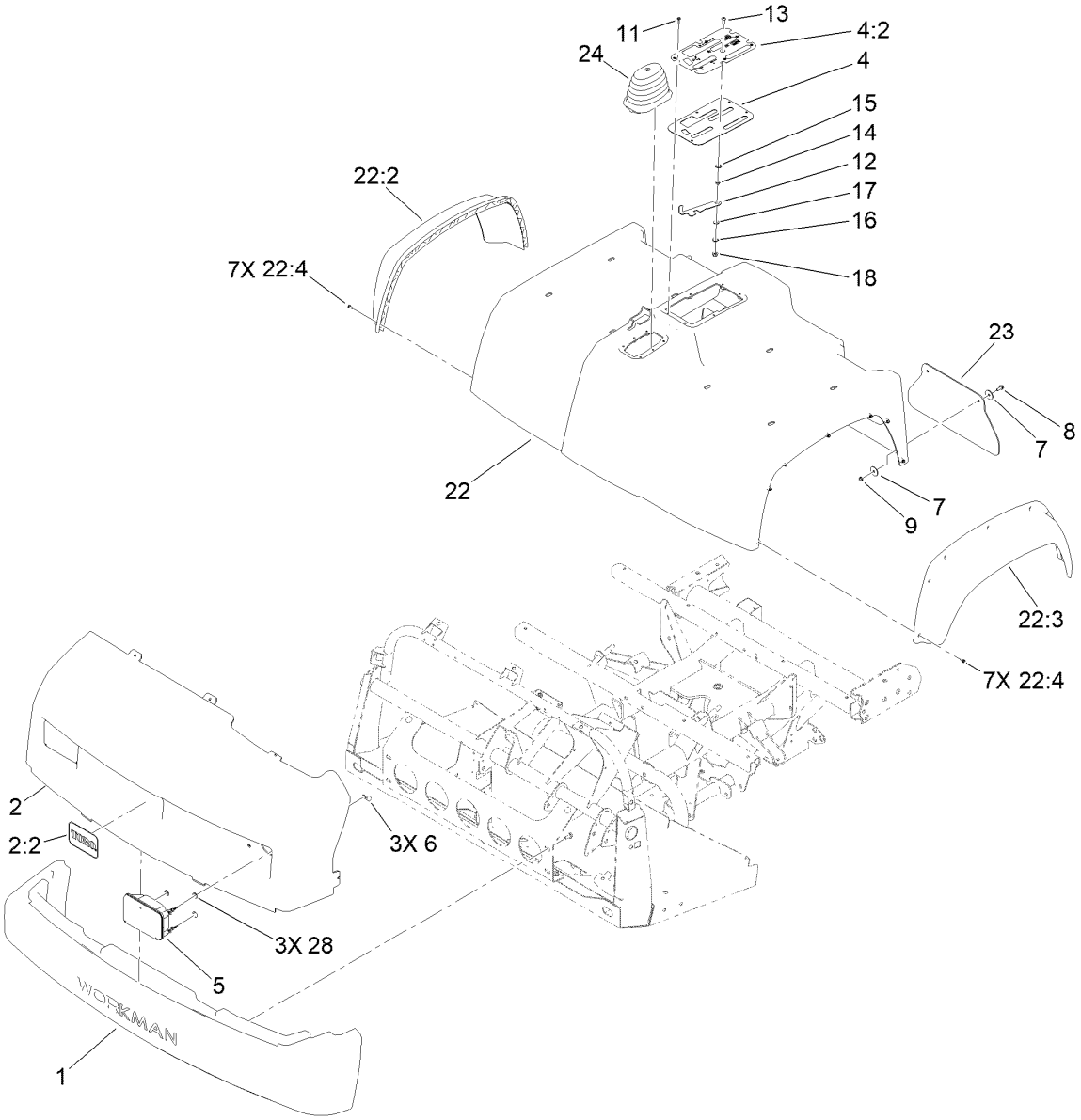


# Bumper, Hood and Seat Base Assembly

| Ref. | Part Number | Qty. | Description |
|---|---|---|---|
| 1 | 112-3185 | 1 | Bumper |
| 2 | 145-2284 | 1 | Hood ASM |
| 2:2 | 117-4950 | 1 | Decal |
| 4 | 106-7886 | 1 | Control Plate ASM |
| 4:2 | 106-2377 | 1 | Decal-Console |
| 5 | 138-9260 | 2 | Headlight ASM |
| 6 | 114-8341 | 6 | Clip-Speed |
| 7 | 3256-55 | 8 | Washer-Flat |
| 8 | 3234-4 | 4 | Screw-HHF |
| 9 | 104-7201 | 4 | Nut-HF, NI |
| 11 | 98-1375 | 6 | Screw-HWH |
| 12 | 106-7984 | 1 | Lever-Detent |
| 13 | 3274-55 | 1 | Screw-HSBH |

| Ref. | Part Number | Qty. | Description |
|---|---|---|---|
| 14 | 82-4240 | 1 | Spacer-Bearing |
| 15 | 94-8196 | 1 | Washer-Nylon |
| 16 | 3290-221 | 1 | Washer-Spring |
| 17 | 3256-23 | 1 | Washer-Plain |
| 18 | 104-8300 | 1 | Nut-HF, NI |
| 22 | 133-0566 | 1 | Seatbase ASM |
| 22:2 | 114-8407 | 1 | Fender-Front, RH |
| 22:3 | 114-8408 | 1 | Fender-Front, LH |
| 22:4 | 117-5036 | 14 | Screw-Plastic, HWH |
| 23 | 106-2378 | 2 | Mudflap |
| 24 | 117-8063 | 1 | Boot-Shift |
| 28 | 112-6957 | 6 | Washer-Hardened |

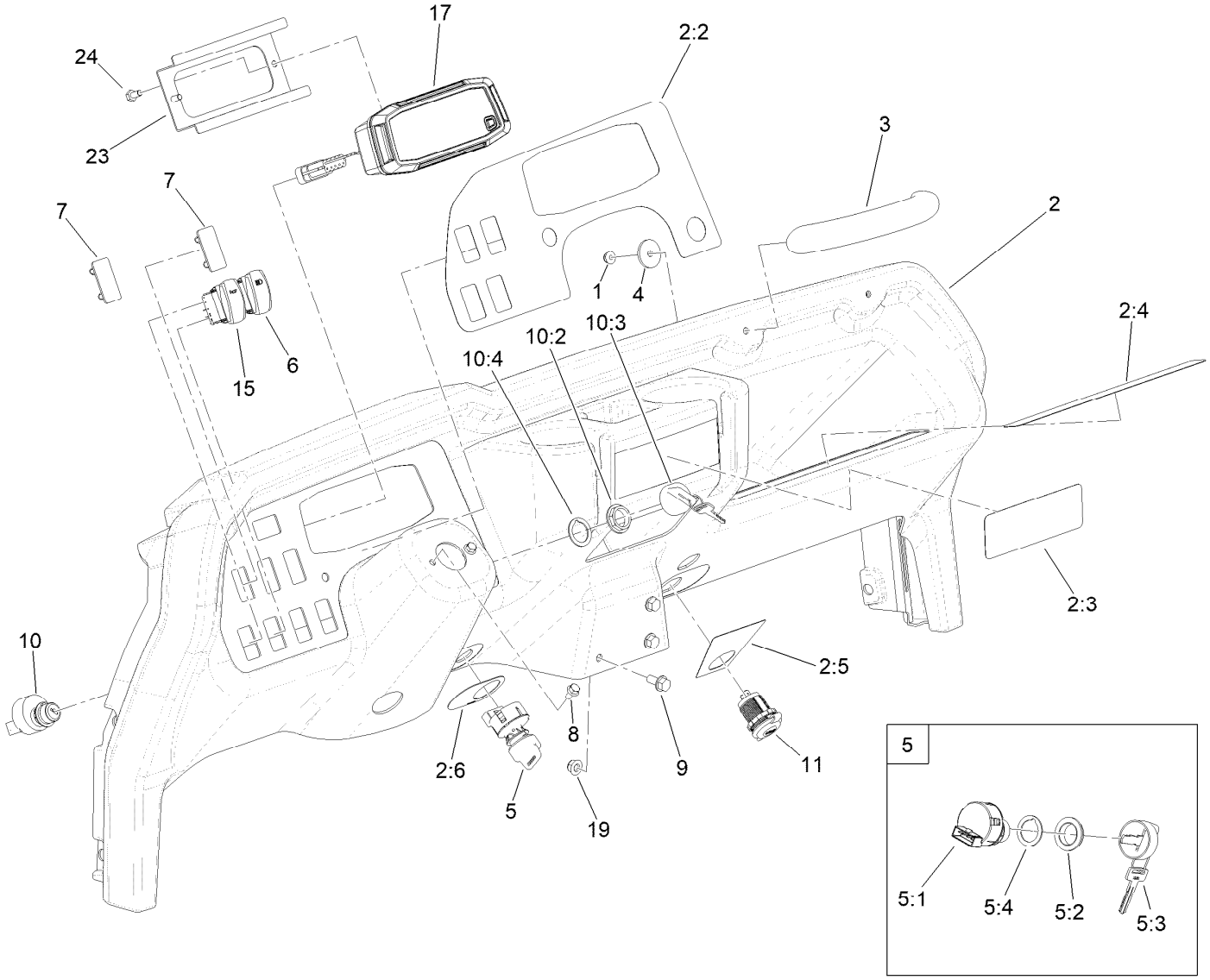


# Dash Assembly

| Ref. | Part Number | Qty. | Description |
|---|---|---|---|
| 1 | 104-7201 | 2 | Nut-HF, NI |
| 2 | 145-2283 | 1 | Dash ASM |
| 2:2 | 145-2276 | 1 | Decal-Control Panel, HD |
| 2:3 | 121-9776 | 1 | Decal-Danger, Vehicle (CE) |
| 2:4 | 115-2282 | 1 | Decal-Warning, Dash |
| 2:5 | 145-2282 | 1 | Decal-USB |
| 2:6 | 106-2355 | 1 | Decal-Switch, Supervisor |
| 3 | 117-4948 | 1 | Handle-Grab |
| 4 | 103995 | 2 | Washer |
| 5 | 110-2580 | 1 | Switch-Key, Supervisor |
| 5:1 | | 1 | Switch-Key ● |
| 5:2 | 108-8660 | 1 | Nut-Mounting |
| 5:3 | 110-5221 | 1 | Set-Key, Supervisor |
| 5:4 | 108-8659 | 1 | Washer-Backup |
| 6 | 144-2405 | 1 | Switch-Rocker, On-None-On |

| Ref. | Part Number | Qty. | Description |
|---|---|---|---|
| 7 | 99-7420 | 2 | Plug-Hole |
| 8 | 33103-012 | 2 | Screw-HHF |
| 9 | 3234-5 | 3 | Screw-HHF |
| 10 | 106-5269 | 1 | Ignition Switch ASM |
| 10:2 | 108-8660 | 1 | Nut-Mounting |
| 10:3 | 106-5270 | 1 | Ignition Key Set |
| 10:4 | 108-8659 | 1 | Washer-Backup |
| 11 | 131-8388 | 1 | Socket-USB |
| 15 | 144-2415 | 1 | Switch-Rocker, (On)-None-Off |
| 17 | 139-4528 | 1 | Cluster-Instrument |
| 19 | 104-8300 | 3 | Nut-HF, NI |
| 23 | 140-4556-0P | 1 | Retainer-Display |
| 24 | 321-2 | 2 | Screw-HH |

● Not serviced separately

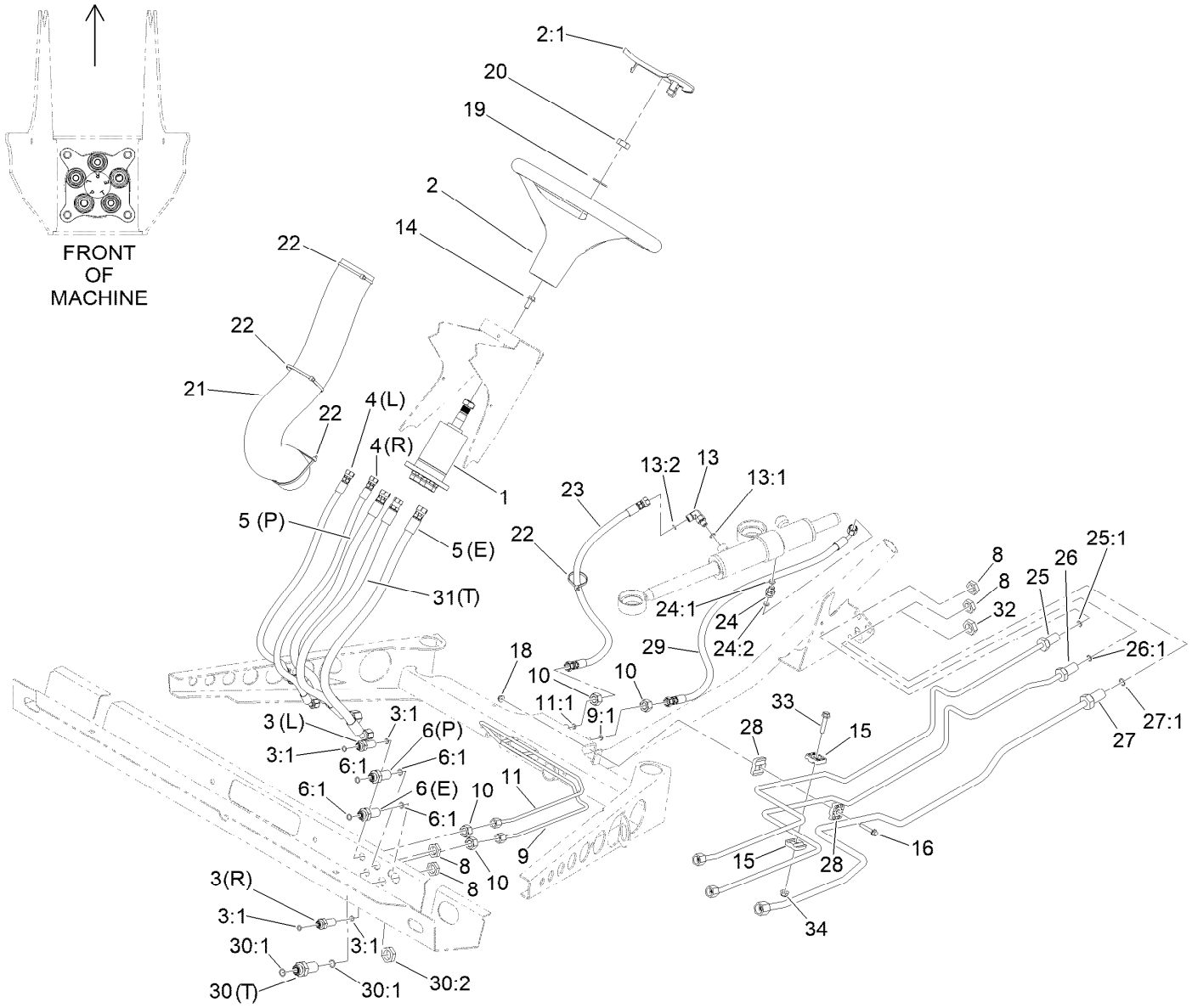


# Steering Hydraulic Assembly

| Ref. | Part Number | Qty. | Description |
|---|---|---|---|
| 1 | 147-3119 | 1 | Valve-Steering Unit |
| 2 | 98-1471 | 1 | Wheel-Steering |
| 2:1 | 98-1468 | 1 | Cover-Wheel, Steering |
| 3 | 94-1444 | 2 | Union-Bulkhead |
| 3:1 | 237-21 | 2 | O-Ring |
| 4 | 147-7988 | 2 | Hose ASM, HYD HP |
| 5 | 147-7989 | 2 | Hose ASM, HYD HP |
| 6 | 340-71 | 2 | Fitting-Straight, Bulkhead |
| 6:1 | 237-22 | 2 | O-Ring |
| 8 | 340-70 | 4 | Nut-Lock |
| 9 | 106-7804 | 1 | Tube-HYD |
| 9:1 | 237-21 | 1 | O-Ring |
| 10 | 3219-10 | 4 | Nut-Hex |
| 11 | 106-7806 | 1 | Tube-HYD |
| 11:1 | 237-21 | 1 | O-Ring |
| 13 | 340-132 | 1 | Fitting-Elbow, 90 DEG |
| 13:1 | 237-78 | 1 | O-Ring |
| 13:2 | 237-21 | 1 | O-Ring |
| 14 | 98-7977 | 4 | Screw-HHF |
| 15 | 56-7972 | 2 | Clamp-Tube |
| 16 | 94-5781 | 1 | Screw-HHF |

| Ref. | Part Number | Qty. | Description |
|---|---|---|---|
| 18 | 104-7201 | 1 | Nut-HF, NI |
| 19 | 3256-27 | 1 | Washer-Flat |
| 20 | 3296-33 | 1 | Nut-Lock, NI |
| 21 | 106-6713 | 1 | Cover-Lines, Steering |
| 22 | 3290-379 | 4 | Tie-Cable |
| 23 | 147-7990 | 1 | Hose ASM, HYD HP Sa |
| 24 | 340-92 | 1 | Fitting-Straight |
| 24:1 | 237-78 | 1 | O-Ring |
| 24:2 | 237-21 | 1 | O-Ring |
| 25 | 115-7701 | 1 | Tube-HYD |
| 25:1 | 237-22 | 1 | O-Ring |
| 26 | 147-7969 | 1 | Hydraulic Tube ASM |
| 26:1 | 237-22 | 1 | O-Ring |
| 27 | 147-7968 | 1 | Hydraulic Tube ASM |
| 27:1 | 237-30 | 1 | O-Ring |
| 28 | 56-7973 | 2 | Clamp-Tube |
| 29 | 147-7991 | 1 | Hose ASM, HYD HP |
| 30 | 340-161 | 1 | Fitting-Bulkhead |
| 30:1 | 237-30 | 2 | O-Ring |
| 30:2 | 340-127 | 1 | Nut-Bulkhead |
| 31 | 147-8188 | 1 | Hose-HYD HP |

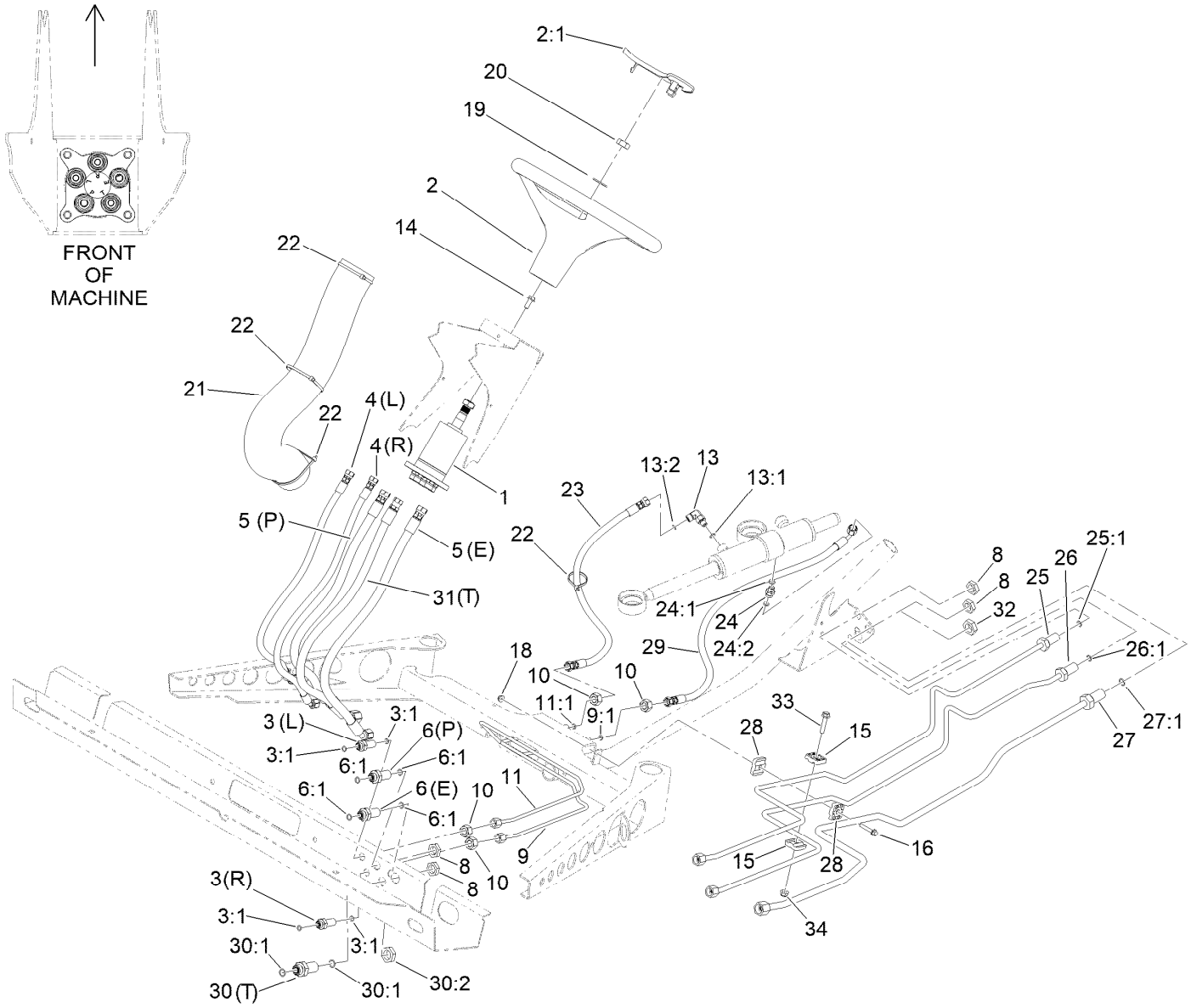


# Steering Hydraulic Assembly (continued)

| Ref. | Part Number | Qty. | Description |
|---|---|---|---|
| 32 | 340-127 | 1 | Nut-Bulkhead |

| Ref. | Part Number | Qty. | Description |
|---|---|---|---|
| 33 | 115-1794 | 1 | Screw-HHF |
| 34 | 104-8300 | 1 | Nut-HF, NI |

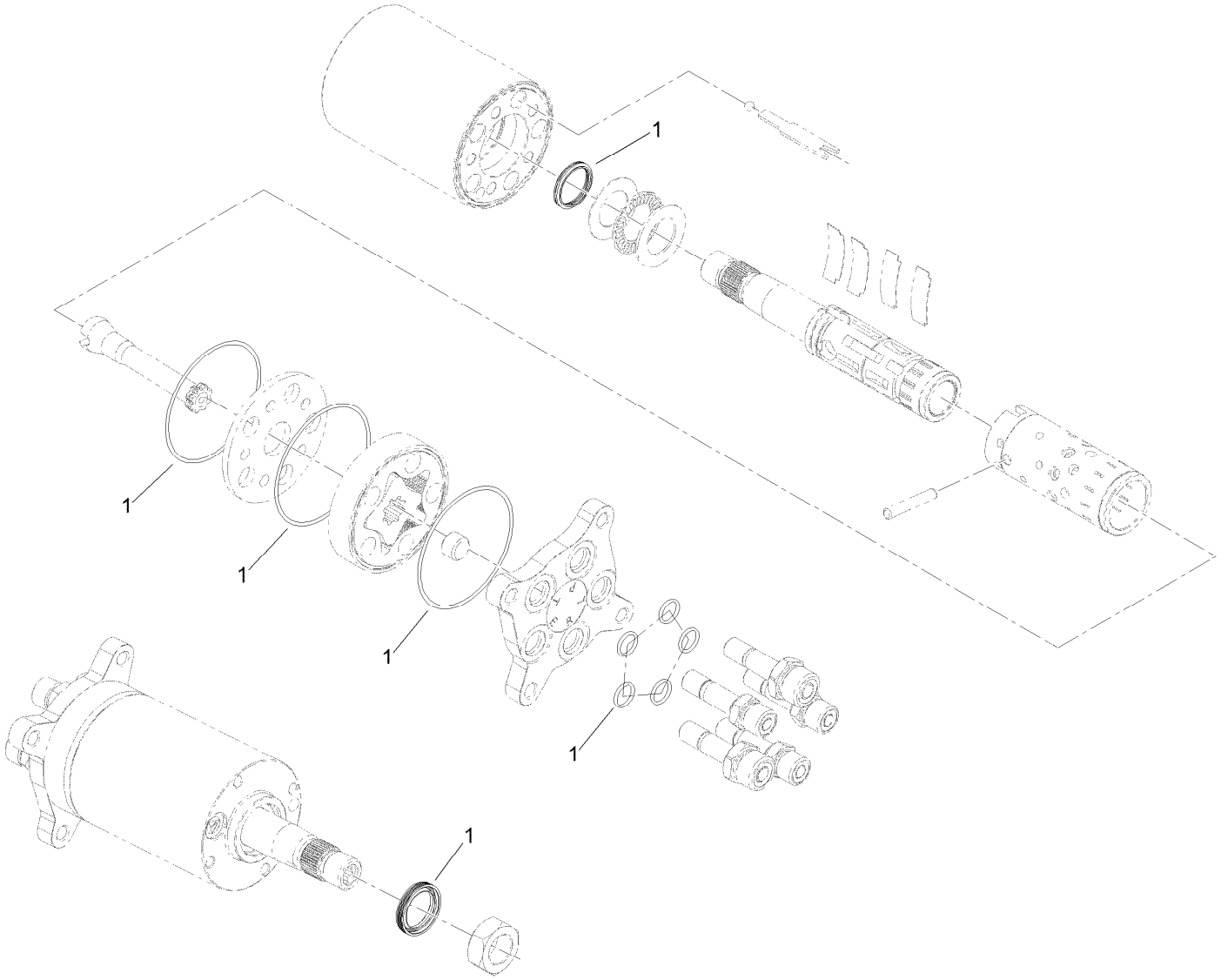


# Steering Valve Assembly No. 147-3119

| *Ref.* | *Part Number* | *Qty.* | *Description* |
|---|---|---|---|
| 1 | 147-8198 | 1 | Seal Kit |

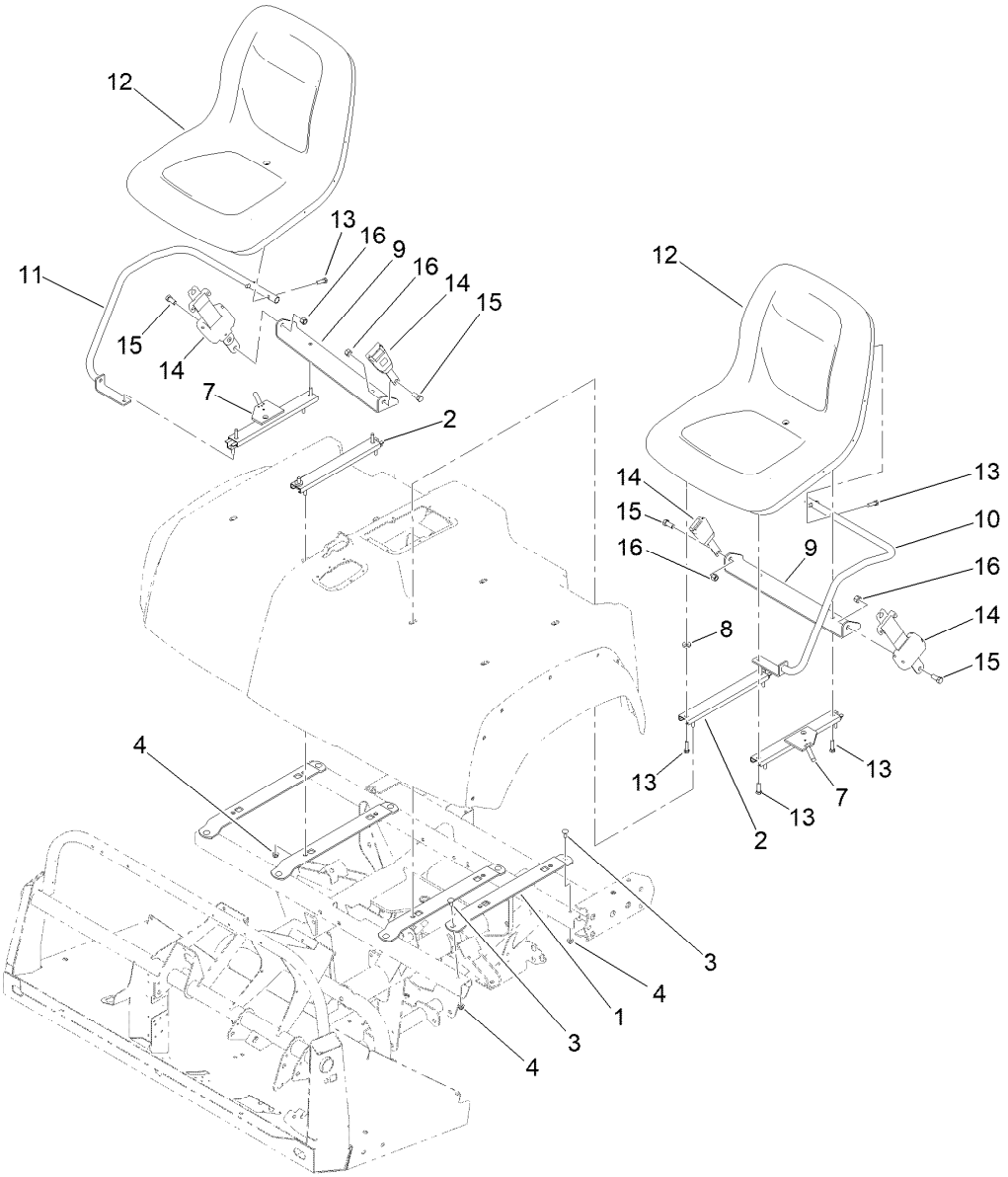


# Seat Assembly

| Ref. | Part Number | Qty. | Description |
|---|---|---|---|
| 1 | 115-2435-0P | 4 | Bracket-Seat |
| 2 | 92-8990 | 2 | Adjuster-Seat, Non-Locking |
| 3 | 3230-1 | 8 | Bolt-CARR |
| 4 | 104-8300 | 16 | Nut-HF, NI |
| 7 | 92-8991 | 2 | Adjuster (W/Latch) |
| 8 | 104-7658 | 2 | Spacer |
| 9 | 119-0727-03 | 2 | Bracket-Belt, Seat |
| 10 | 140-6359 | 1 | Armrest LH |
| 11 | 140-6360 | 1 | Armrest-RH |
| 12 | 133-0577 | 2 | Seat ASM |
| 13 | 33114-030 | 12 | Screw-HH |
| 14 | 110-0413 | 2 | Seatbelt-Retractable |
| 15 | 3212-4 | 4 | Screw-HH |
| 16 | 3296-7 | 4 | Nut-Lock |

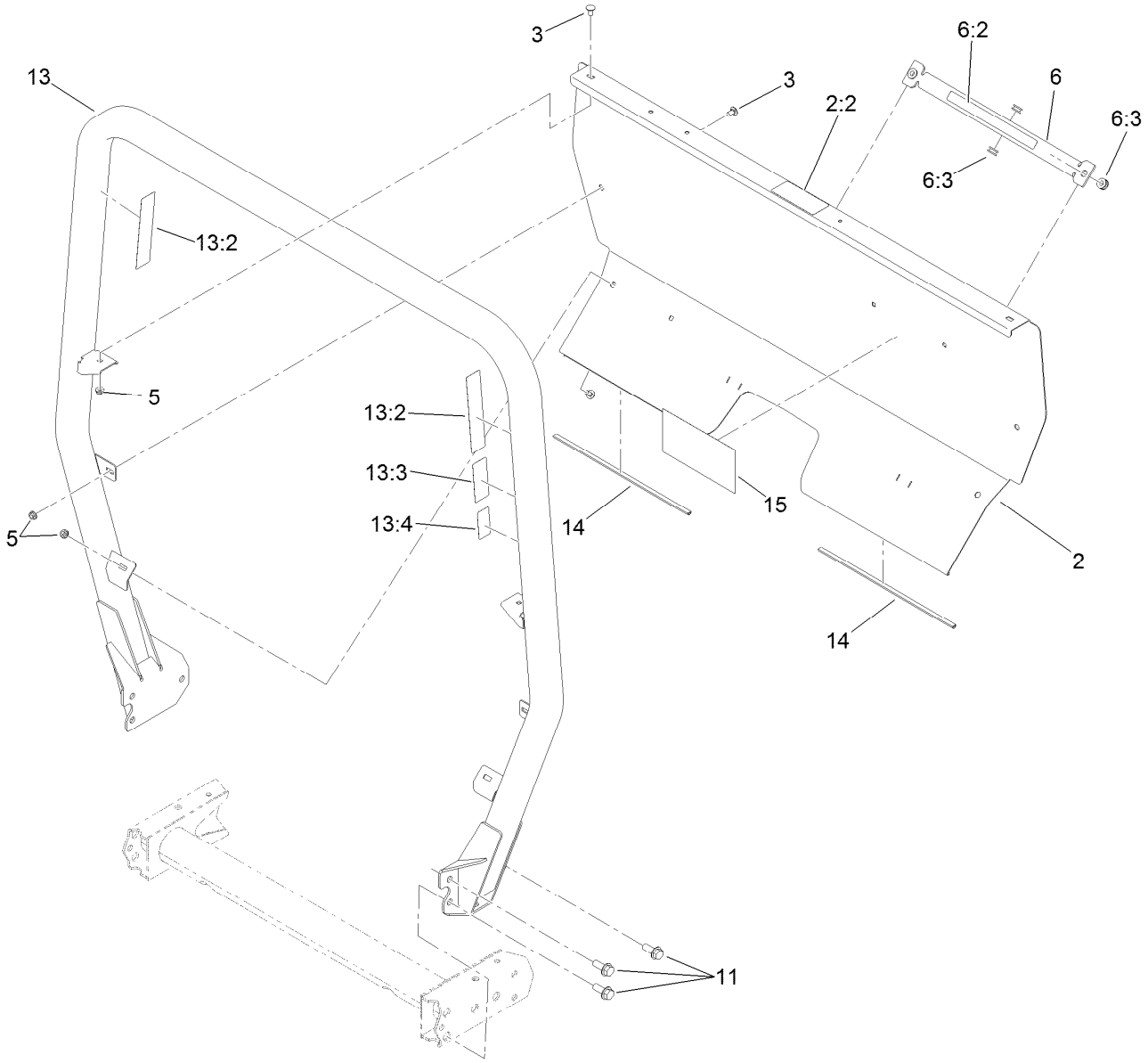


# Roll-Over Protection System Assembly

| Ref. | Part Number | Qty. | Description |
|---|---|---|---|
| 2 | 115-2213 | 1 | ROPS Cover ASM |
| 2:2 | 105-4215 | 1 | Decal-Caution |
| 3 | 3230-18 | 6 | Screw-CARR |
| 5 | 32128-20 | 6 | Nut-HF |
| 6 | 105-7960 | 1 | Bed Support ASM |
| 6:2 | 93-9852 | 1 | Decal-Warning |
| 6:3 | 92-5972 | 4 | Grommet-Rubber |
| 11 | 3234-38 | 6 | Screw-HHF |
| 13 | 115-7910 | 1 | ROPS ASM |
| 13:2 | 106-7767 | 2 | Decal-ROPS |
| 13:3 | 93-9850 | 1 | Decal-ROPS, CE |
| 13:4 | 117-4969 | 1 | Decal-ROPS, ISO |
| 14 | 127-7382 | 2 | Seal-ROPS |
| 15 | 115-7814 | 1 | Decal-Reference, Quick |

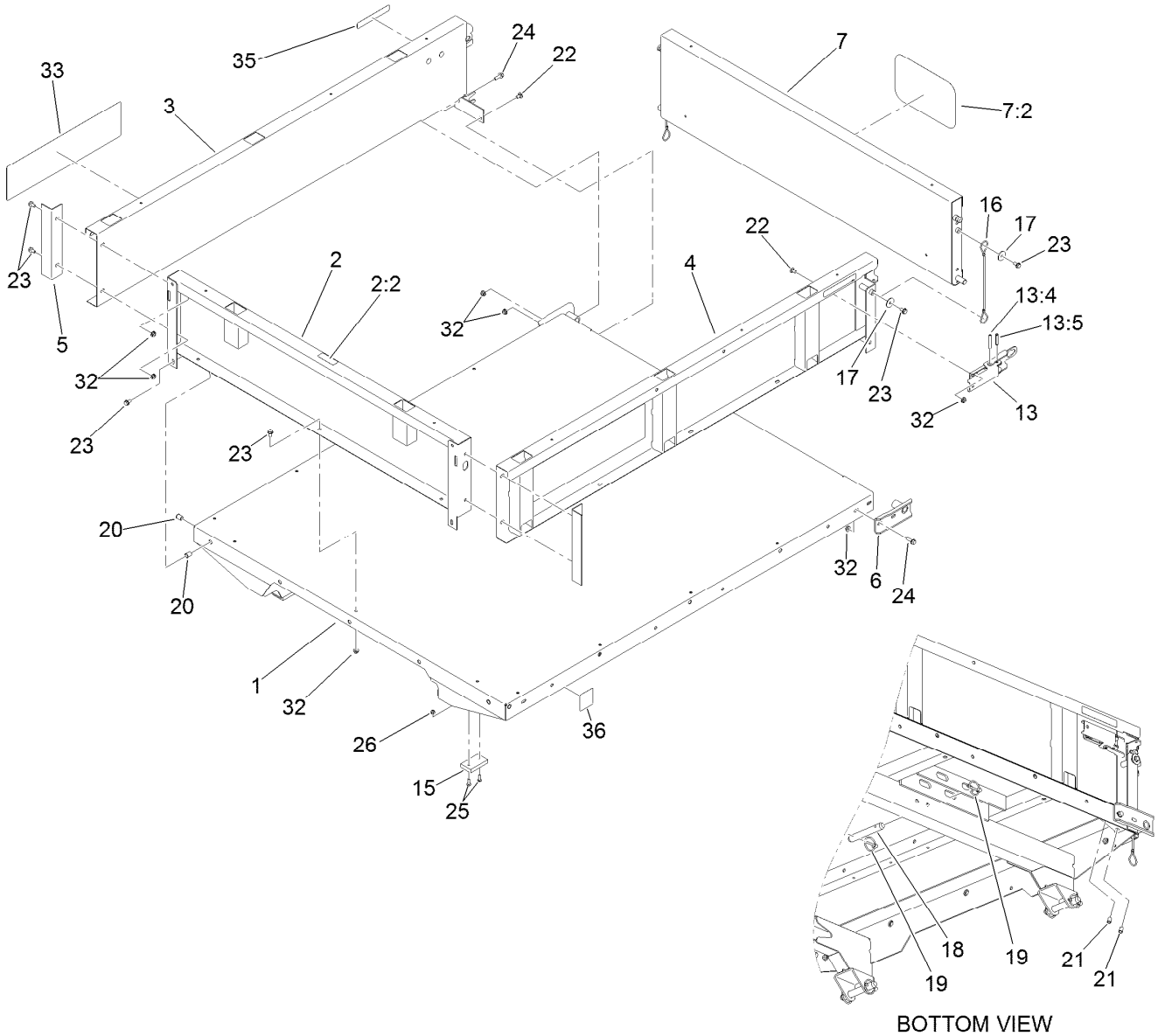


# Full Bed and Side Panel Assembly

| Ref. | Part Number | Qty. | Description |
|---|---|---|---|
| 1 | 138-5675 | 1 | Flatbed ASM |
| 2 | 133-0645 | 1 | Front Panel ASM |
| 2:2 | 115-7739 | 1 | Decal-No Riders |
| 3 | 133-0617 | 1 | Panel-Side, RH |
| 4 | 133-0616 | 1 | Panel-Side, LH |
| 5 | 92-1320-03 | 2 | Angle-Side |
| 6 | 92-1265-03 | 2 | Bracket-Pivot |
| 7 | 133-0644 | 1 | Tailgate |
| 7:2 | 105-4222 | 1 | Decal |
| 13 | 140-4795 | 2 | Latch ASM |
| 13:4 | 32121-78 | 1 | Pin-Roll |
| 13:5 | 32121-25 | 1 | Pin-Roll |
| 15 | 93-9719 | 2 | Block-Wear |
| 16 | 93-9595 | 2 | Lanyard |

| Ref. | Part Number | Qty. | Description |
|---|---|---|---|
| 17 | 3256-57 | 4 | Washer-Flat |
| 18 | 92-1233 | 4 | Pin-Clevis |
| 19 | 92-1298 | 8 | Pin-Lynch |
| 20 | 32148-7 | 4 | Nut-Clinch |
| 21 | 32148-6 | 4 | Nut-Clinch |
| 22 | 3230-18 | 6 | Screw-CARR |
| 23 | 3234-7 | 21 | Screw-HHF |
| 24 | 3234-29 | 6 | Screw-HHF |
| 25 | 3250-45 | 4 | Screw-SPH |
| 26 | 3296-42 | 4 | Nut-Lock, NI |
| 32 | 32128-20 | 27 | Nut-HF |
| 33 | 115-7913 | 2 | Decal |
| 35 | 93-9868 | 2 | Decal-Caution |
| 36 | 93-9899 | 2 | Decal-Warning |

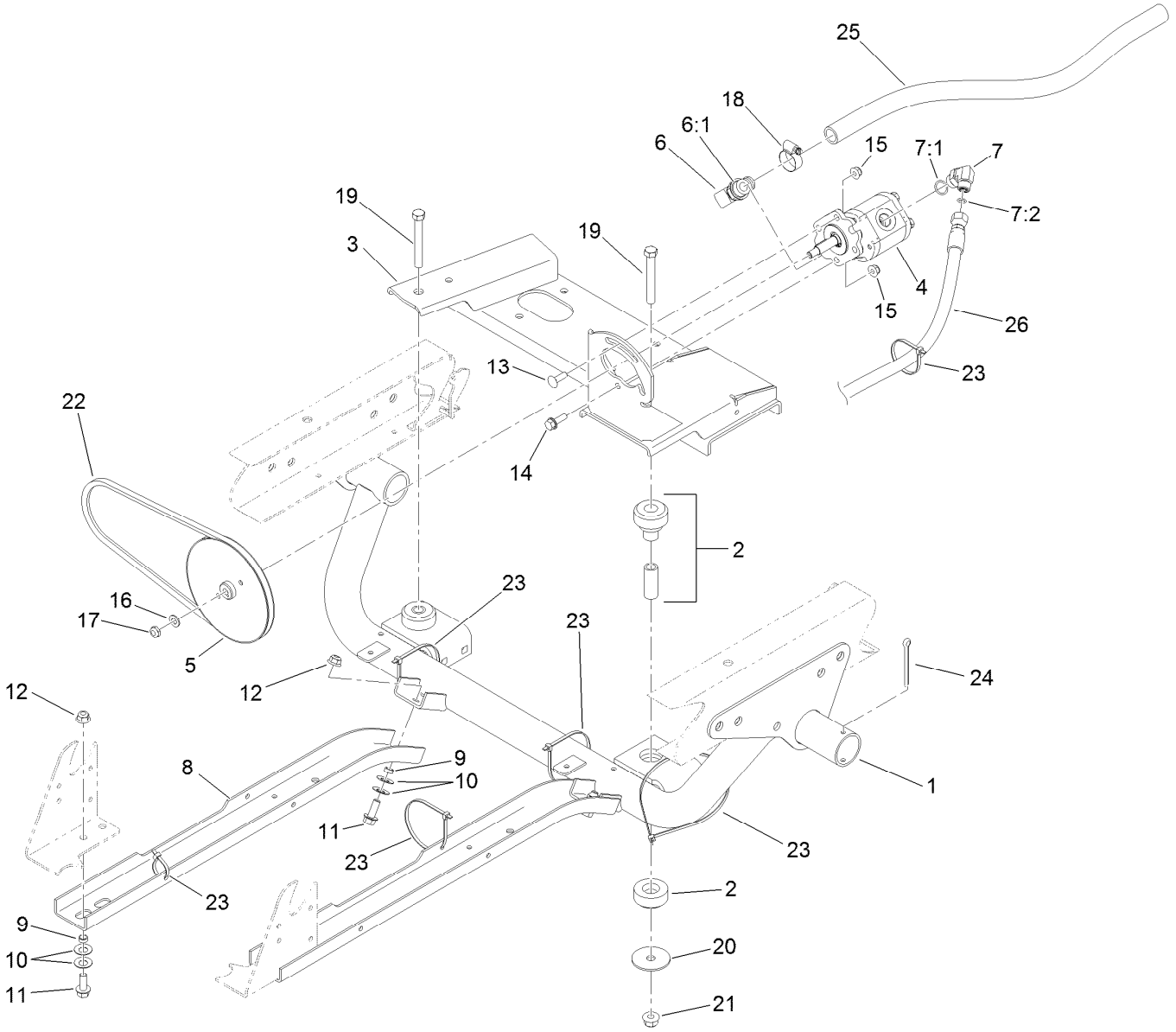


# Engine Sub Frame Assembly

| Ref. | Part Number | Qty. | Description |
|---|---|---|---|
| 1 | 115-2257-03 | 1 | Engine Support ASM |
| 2 | 106-7865 | 2 | Mount-Engine |
| 3 | 115-2352-0P | 1 | Engine Mount ASM [primed] |
| 4 | 112-2983 | 1 | Pump-Gear, Hydraulic |
| 5 | 87-7740 | 1 | Pulley |
| 6 | 87-8170 | 1 | Fitting-90 |
| 6:1 | 237-80 | 1 | O-Ring |
| 7 | 340-18 | 1 | Fitting-HYD, 90 DEG |
| 7:1 | 237-79 | 1 | O-Ring |
| 7:2 | 237-22 | 1 | O-Ring |
| 8 | 87-4730-0P | 2 | Guard-Belly |
| 9 | 76-9100 | 6 | Spacer |
| 10 | 3290-413 | 12 | Washer-Belleville |
| 11 | 3234-11 | 6 | Screw-HHF |
| 12 | 104-8301 | 6 | Nut-HF, NI |

| Ref. | Part Number | Qty. | Description |
|---|---|---|---|
| 13 | 3230-22 | 1 | Screw-CARR |
| 14 | 3234-29 | 1 | Screw-HHF |
| 15 | 104-8300 | 2 | Nut-HF, NI |
| 16 | 3256-45 | 1 | Washer-Flat |
| 17 | 3296-5 | 1 | Nut-Hex |
| 18 | 2412-129 | 2 | Clamp-Hose |
| 19 | 324-13 | 2 | Screw-HH |
| 20 | 87-5100 | 2 | Washer-Snubbing |
| 21 | 114-8417 | 2 | Nut-HF, NI |
| 22 | 87-8370 | 1 | V-Belt |
| 23 | 3290-379 | 6 | Tie-Cable |
| 24 | 3272-37 | 2 | Pin-Cotter |
| 25 | 87-8030 | 1 | Hose-Suction |
| 26 | 145-2295 | 1 | Hydraulic Hose ASM |

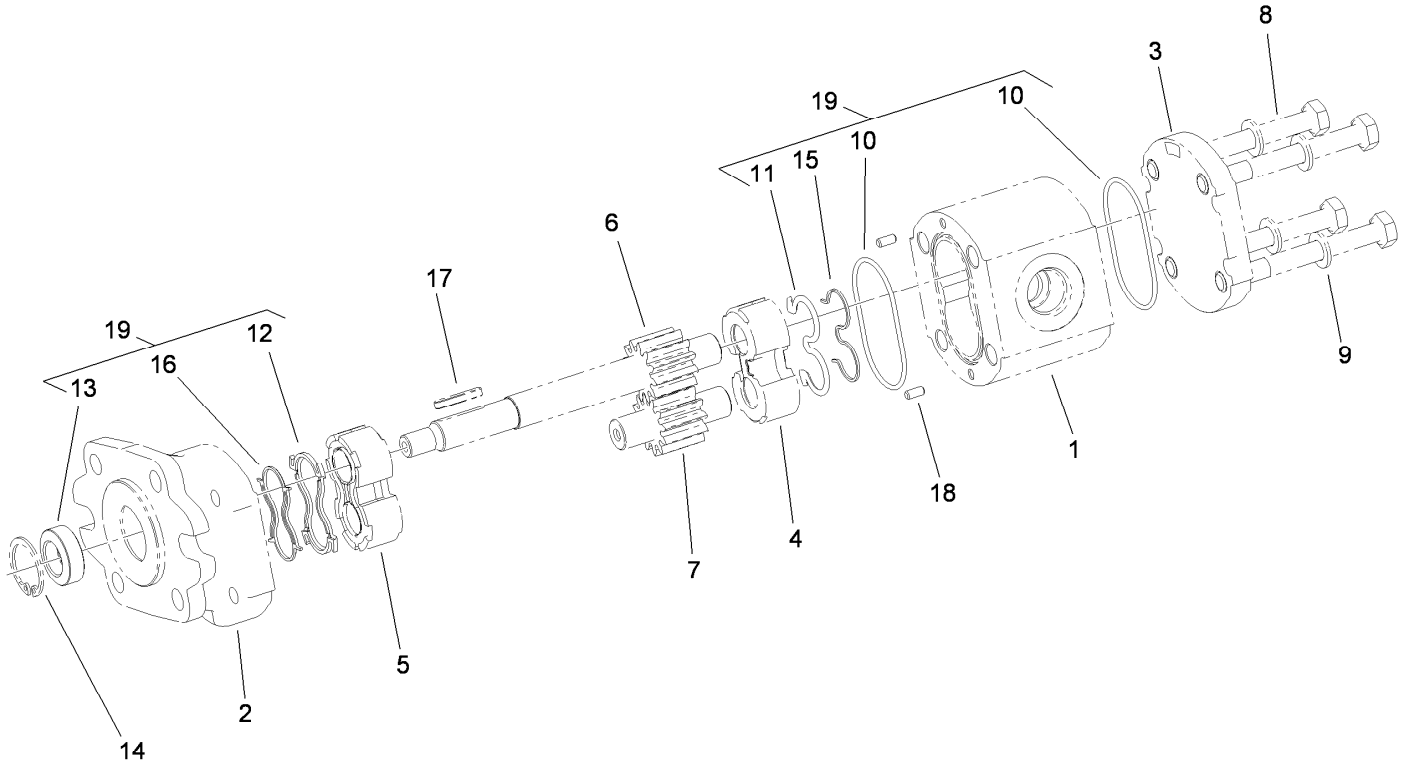


# Hydraulic Gear Pump Assembly No. 112-2983

| Ref. | Part Number | Qty. | Description |
|---|---|---|---|
| 1 | | 1 | Body ● |
| 2 | | 1 | Cover-Front ● |
| 3 | | 1 | Cover-Rear ● |
| 4 | | 1 | Plate-Thrust ● |
| 5 | | 1 | Plate-Thrust, Upper ● |
| 6 | | 1 | Shaft-Drive ● |
| 7 | | 1 | Gear-Driven ● |
| 8 | | 4 | Screw-HH ● |
| 9 | | 4 | Washer ● |
| 10 | | 2 | O-Ring Seal ● |
| 11 | | 1 | Seal ● |
| 12 | | 1 | Seal-Upper ● |
| 13 | | 1 | Seal-Shaft ● |
| 14 | | 1 | Ring-Clip ● |
| 15 | | 1 | Seal-Extrusion, Anti ● |
| 16 | | 1 | Seal-Extrusion, Anti ● |
| 17 | 115-7856 | 1 | Key-Square |
| 18 | | 1 | Pin-Dowel ● |
| 19 | 112-0199 | 1 | Seal Kit |

● Not serviced separately

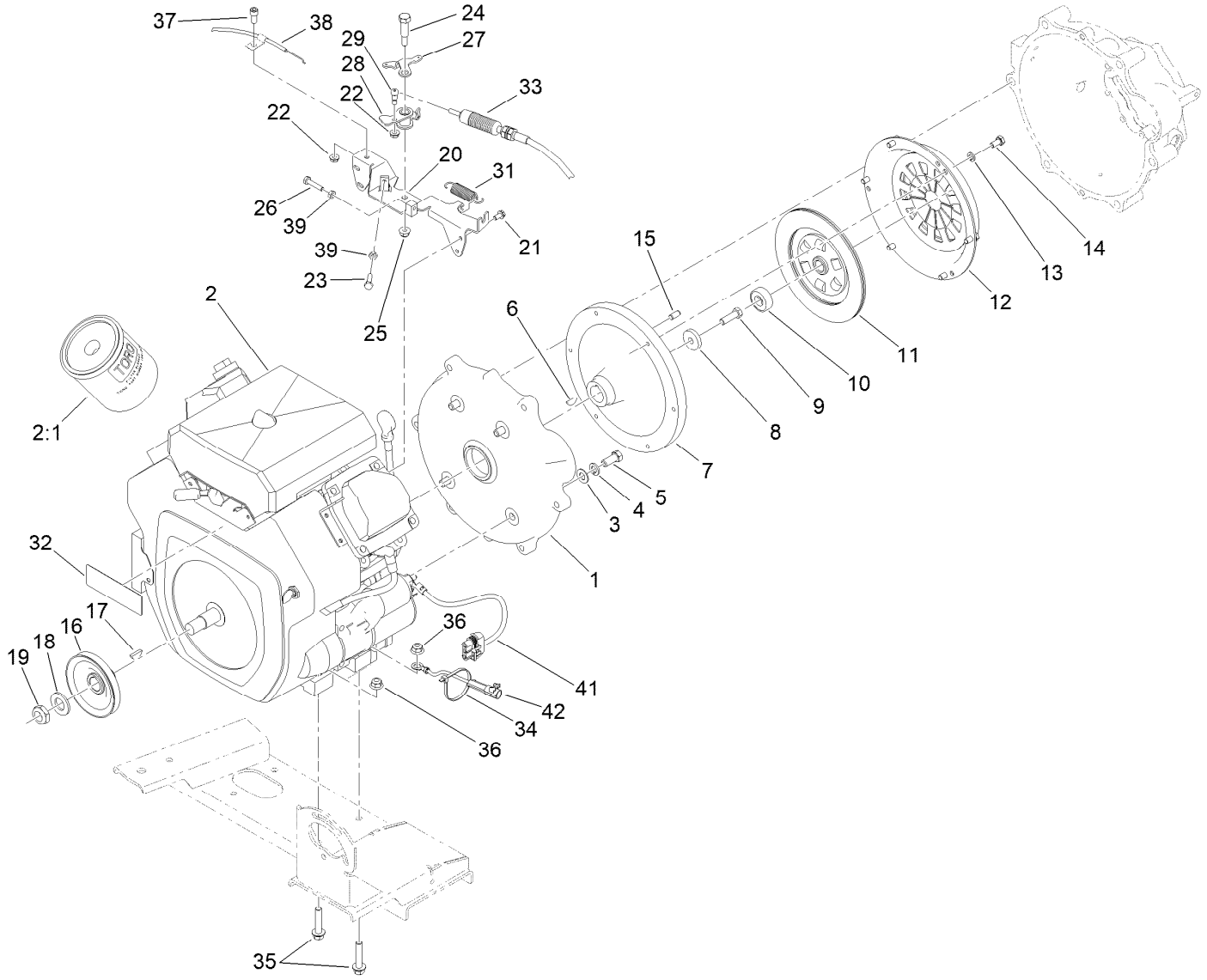


# Engine Assembly

| Ref. | Part Number | Qty. | Description |
|---|---|---|---|
| 1 | 107-7991 | 1 | Adapter-Clutch |
| 2 | 115-7819 | 1 | Engine-Kohler, Ch680-3025 |
| 2:1 | 108-3847 | 1 | Filter-Oil |
| 3 | 3256-25 | 4 | Washer-Flat |
| 4 | 3253-6 | 4 | Washer-Lock |
| 5 | 324-4 | 4 | Screw-HH |
| 6 | 3257-5 | 1 | Key-Woodruff |
| 7 | 120-4893 | 1 | Flywheel |
| 8 | 87-6080 | 1 | Washer |
| 9 | 136-8684 | 1 | Screw-HH |
| 10 | 87-6460 | 1 | Bearing-Ball (W/Seal) |
| 11 | 87-4700 | 1 | Disc-Clutch |
| 12 | 87-4690 | 1 | Cover-Clutch |
| 13 | 3253-4 | 6 | Washer-Lock |
| 14 | 33114-016 | 6 | Screw-HH |
| 15 | 42-7160 | 3 | Pin |
| 16 | 87-7710 | 1 | Pulley ASM |
| 17 | 3257-7 | 1 | Key-Woodruff |
| 18 | 3256-28 | 1 | Washer-Flat |
| 19 | 3296-15 | 1 | Nut-Lock, NI |

| Ref. | Part Number | Qty. | Description |
|---|---|---|---|
| 20 | 121-9659-0P | 1 | Throttle Bracket ASM, [primed] |
| 21 | 32144-4 | 4 | Screw-HWH |
| 22 | 32128-33 | 2 | Nut-HF |
| 23 | 329-6 | 1 | Screw-HH |
| 24 | 7-0030 | 1 | Screw-Shoulder, HH |
| 25 | 104-8300 | 1 | Nut-HF, NI |
| 26 | 329-7 | 1 | Screw-HH |
| 27 | 87-7790 | 1 | Lever-Choke |
| 28 | 87-7800 | 1 | Lever-Throttle |
| 29 | 119-4881 | 1 | Bolt-Shoulder |
| 31 | 67-1450 | 1 | Spring-Idler |
| 32 | 80-8040 | 1 | Decal-Warning |
| 33 | 120-4980 | 1 | Cable-Throttle |
| 34 | 3290-379 | 1 | Tie-Cable |
| 35 | 3234-19 | 4 | Screw-HHF |
| 36 | 104-8301 | 4 | Nut-HF, NI |
| 37 | 3274-15 | 1 | Screw-HSH |
| 38 | 106-7943 | 1 | Cable-Control, Choke |
| 39 | 3220-1 | 2 | Nut-Jam |

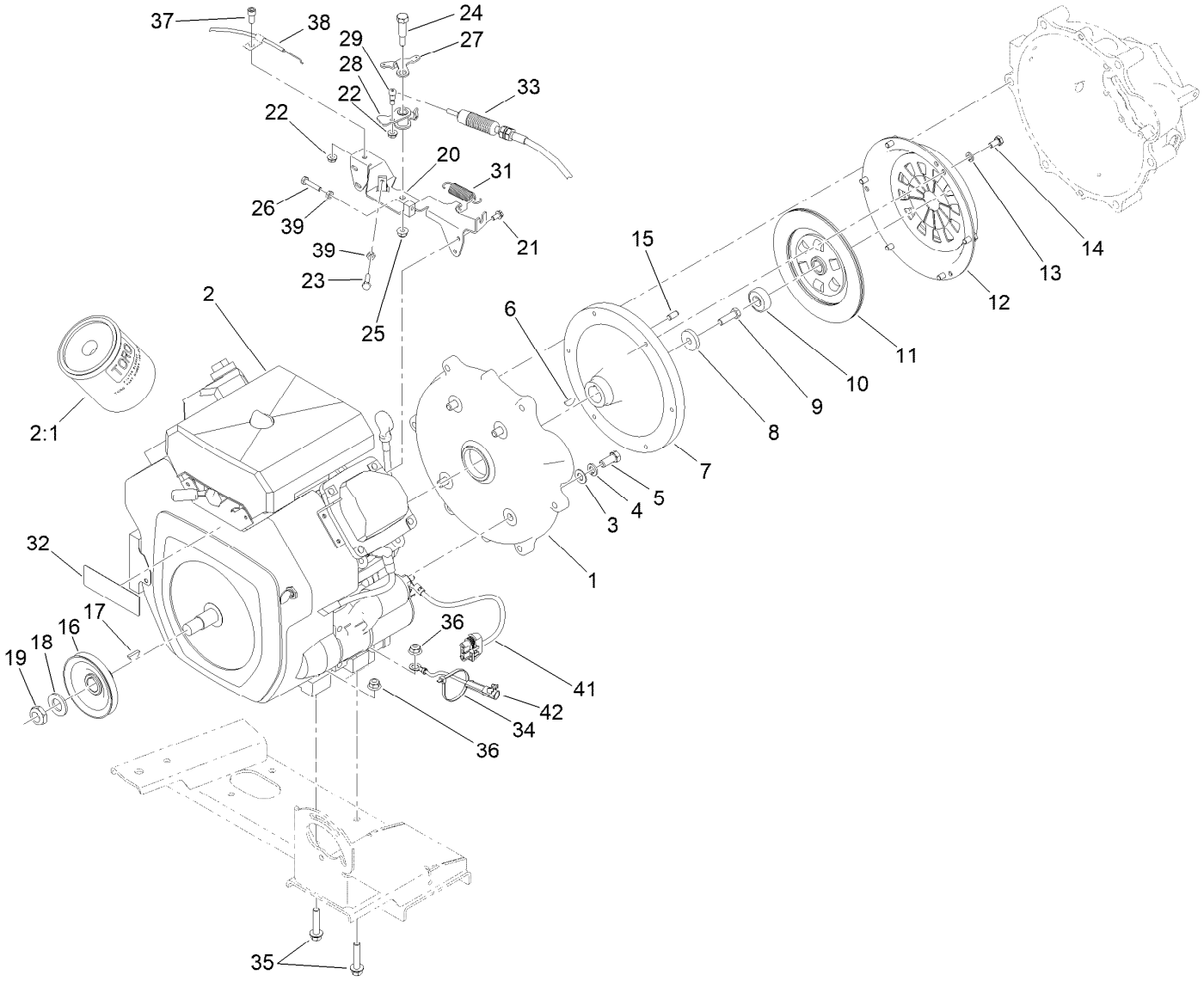


# Engine Assembly (continued)

| Ref. | Part Number | Qty. | Description |
|---|---|---|---|
| 41 | 99-3441 | 1 | Harness-Wire, Fusible Link |
| 42 | 117-5612 | 1 | Harness-Wire, Ground |

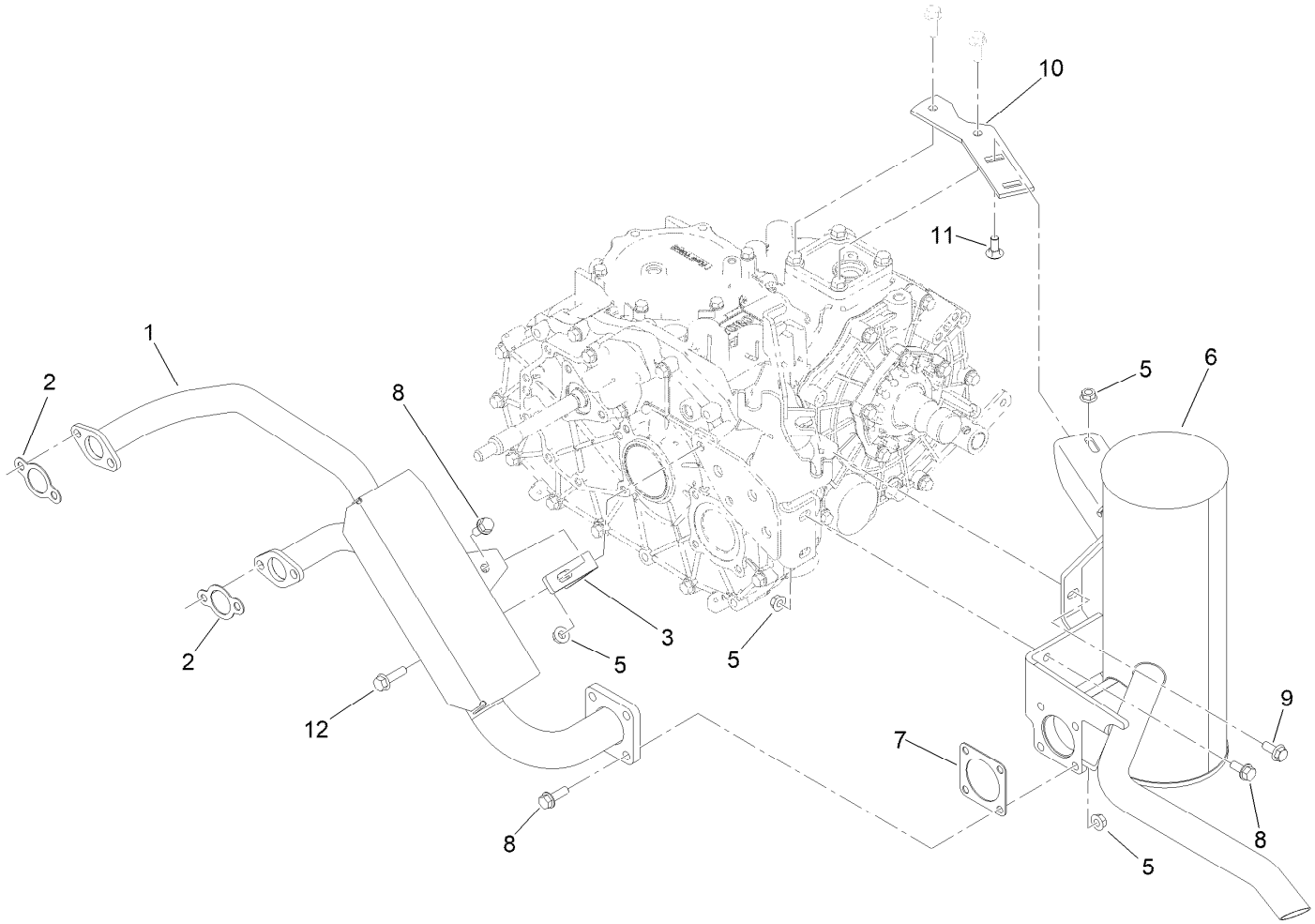


# Muffler Assembly

| *Ref.* | *Part Number* | *Qty.* | *Description* |
|---|---|---|---|
| 1 | 106-7855 | 1 | Manifold-Cooled, Air |
| 2 | 110-6697 | 2 | Gasket-Exhaust |
| 3 | 106-7880 | 1 | Mount-Angle |
| 5 | 32128-20 | 9 | Nut-HF |
| 6 | 133-0613 | 1 | Muffler |
| 7 | 105-4209 | 1 | Gasket-Muffler |
| 8 | 3234-17 | 7 | Screw-HHF |
| 9 | 98-7977 | 1 | Screw-HHF |
| 10 | 105-9472 | 1 | Plate-Mount, Muffler |
| 11 | 3230-1 | 2 | Bolt-CARR |
| 12 | 33104-030 | 1 | Screw-HHF |

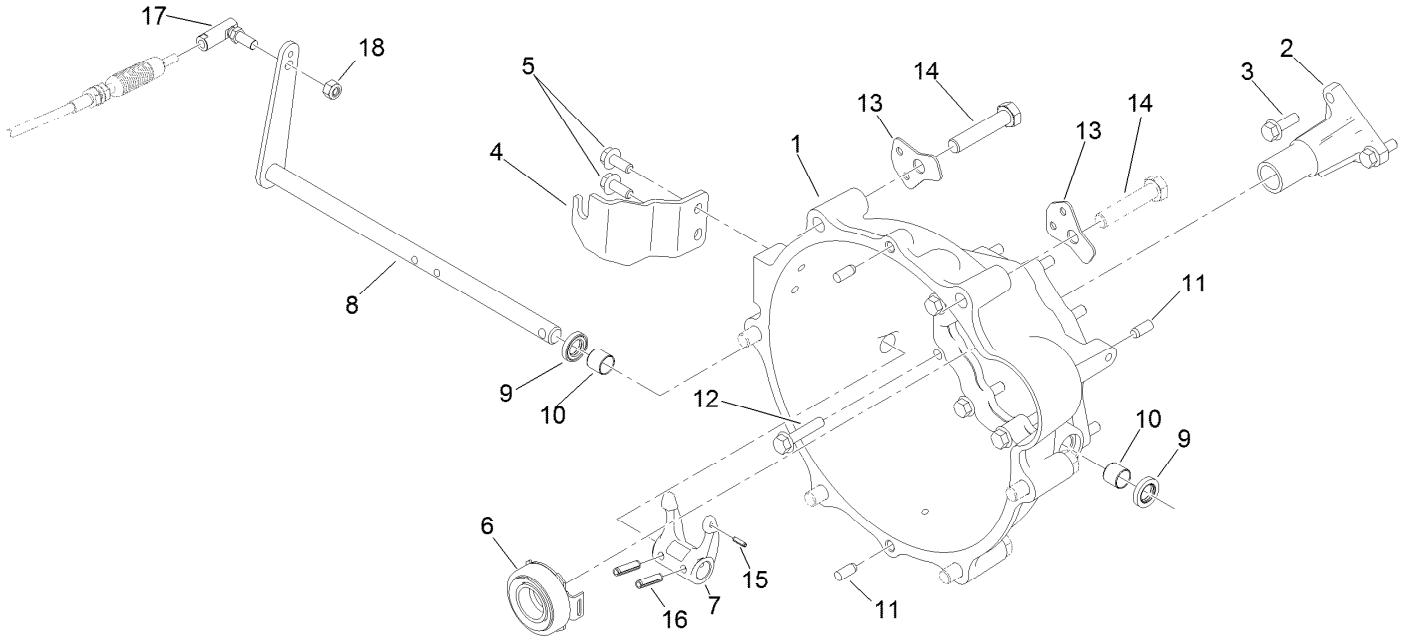


# Clutch Linkage Assembly

| Ref. | Part Number | Qty. | Description |
|---|---|---|---|
| 1 | 104-9249 | 1 | Housing-Bell |
| 2 | 120-4886 | 1 | Guide-Release |
| 3 | 33104-025 | 3 | Screw-HHF |
| 4 | 115-2313 | 1 | Bracket-Cable, Clutch |
| 5 | 98-7977 | 2 | Screw-HHF |
| 6 | 110-2538 | 1 | Bearing-Release, Clutch |
| 7 | 87-5300 | 1 | Fork-Clutch |
| 8 | 115-2311 | 1 | Lever-Clutch |
| 9 | 87-1920 | 2 | Seal-Oil |

| Ref. | Part Number | Qty. | Description |
|---|---|---|---|
| 10 | 87-3770 | 2 | Bushing-Housing, Bell |
| 11 | 87-1910 | 4 | Pin-Dowel |
| 12 | 33104-040 | 9 | Screw-HHF |
| 13 | 115-2247 | 2 | Bracket-Harness |
| 14 | 107-7983 | 6 | Screw-HH |
| 15 | 32121-7 | 1 | Pin-Roll, Slotted |
| 16 | 32121-24 | 2 | Pin-Spring |
| 17 | 2411-33 | 1 | Balljoint-RH (W/Grommet) |
| 18 | 3296-4 | 1 | Nut-Lock |

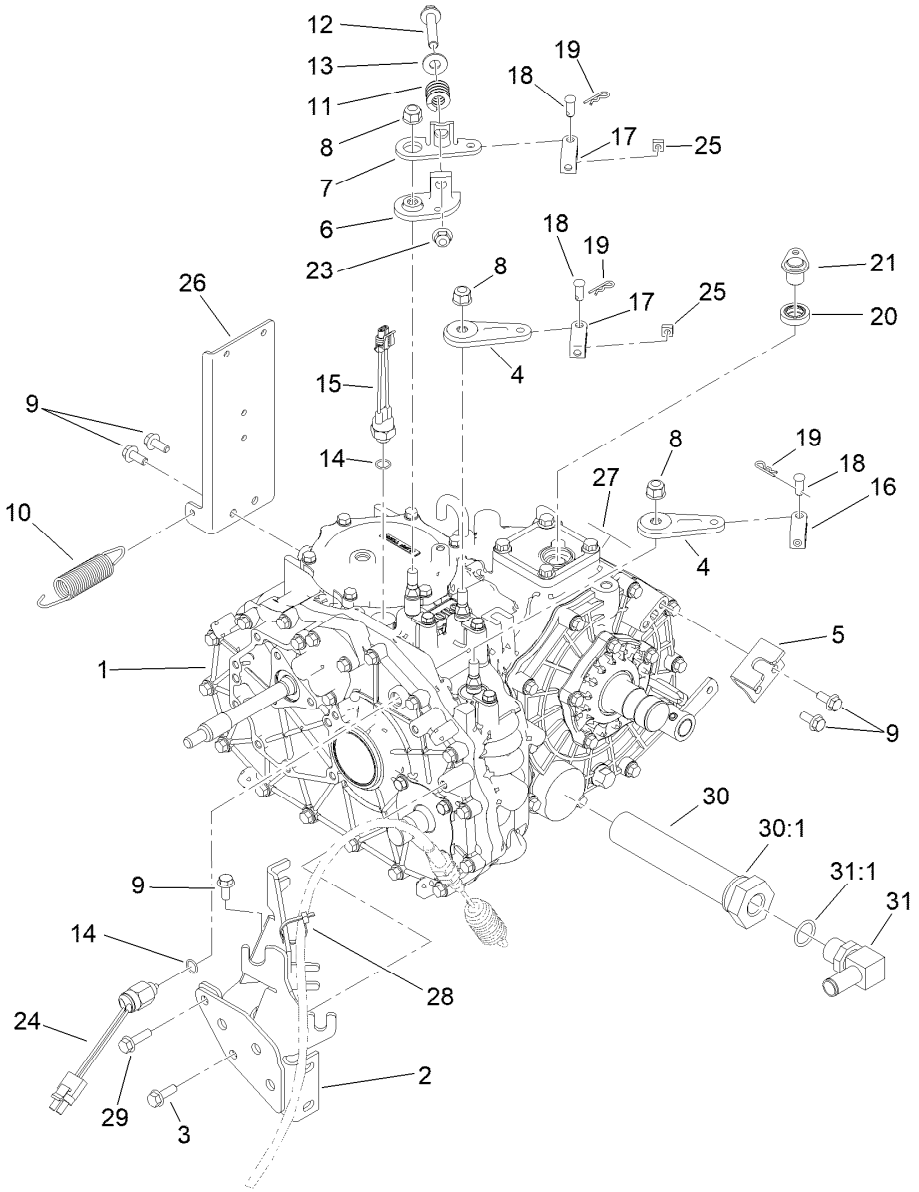


# Transaxle Assembly

| Ref. | Part Number | Qty. | Description |
|---|---|---|---|
| 1 | 115-7783 | 1 | 2 Wheel Drive Transaxle ASM |
| 2 | 105-4207-0P | 1 | Cable Mount ASM,Welded |
| 3 | 33104-025 | 1 | Screw-HHF |
| 4 | 132-6764 | 2 | Lever-Shift |
| 5 | 87-4470 | 1 | Bracket-Lock, Differential |
| 6 | 87-7970 | 1 | Arm-Shift |
| 7 | 87-8250 | 1 | Plate-Arm, Shift |
| 8 | 103-9511 | 3 | Nut-Lock, NI |
| 9 | 98-7977 | 5 | Screw-HHF |
| 10 | 68-9950 | 1 | Spring-Traction |
| 11 | 87-6910 | 1 | Spring-Compression |
| 12 | 66-9302 | 1 | Screw-HHF Lock |
| 13 | 3256-4 | 1 | Washer-Flat |
| 14 | 237-30 | 2 | O-Ring |
| 15 | 72-4310 | 1 | Switch-Ball |
| 16 | 87-7160 | 1 | Clevis-Cable |

| Ref. | Part Number | Qty. | Description |
|---|---|---|---|
| 17 | 87-2310 | 2 | Clevis-Cable |
| 18 | 283-62 | 3 | Pin-Clevis |
| 19 | 3290-307 | 3 | Pin-Cotter |
| 20 | 92-3735 | 1 | Seal-Sensor, Oil |
| 21 | 115-7774 | 1 | Plug ASM |
| 23 | 3290-357 | 1 | Nut-HSF |
| 24 | 87-6710 | 1 | Switch-Transmission |
| 25 | 140-4804 | 2 | Nut-Square |
| 26 | 115-2240-0P | 1 | Fuel Bracket ASM [primed] |
| 27 | 115-7741 | 1 | Decal-Oil, Transmission |
| 28 | 3290-379 | 1 | Tie-Cable |
| 29 | 33104-030 | 1 | Screw-HHF |
| 30 | 147-6678 | 1 | Strainer-Hydraulic |
| 30:1 | 237-101 | 1 | O-Ring |
| 31 | 353-987 | 1 | Fitting-Elbow, 90 |
| 31:1 | 237-81 | 1 | O-Ring |

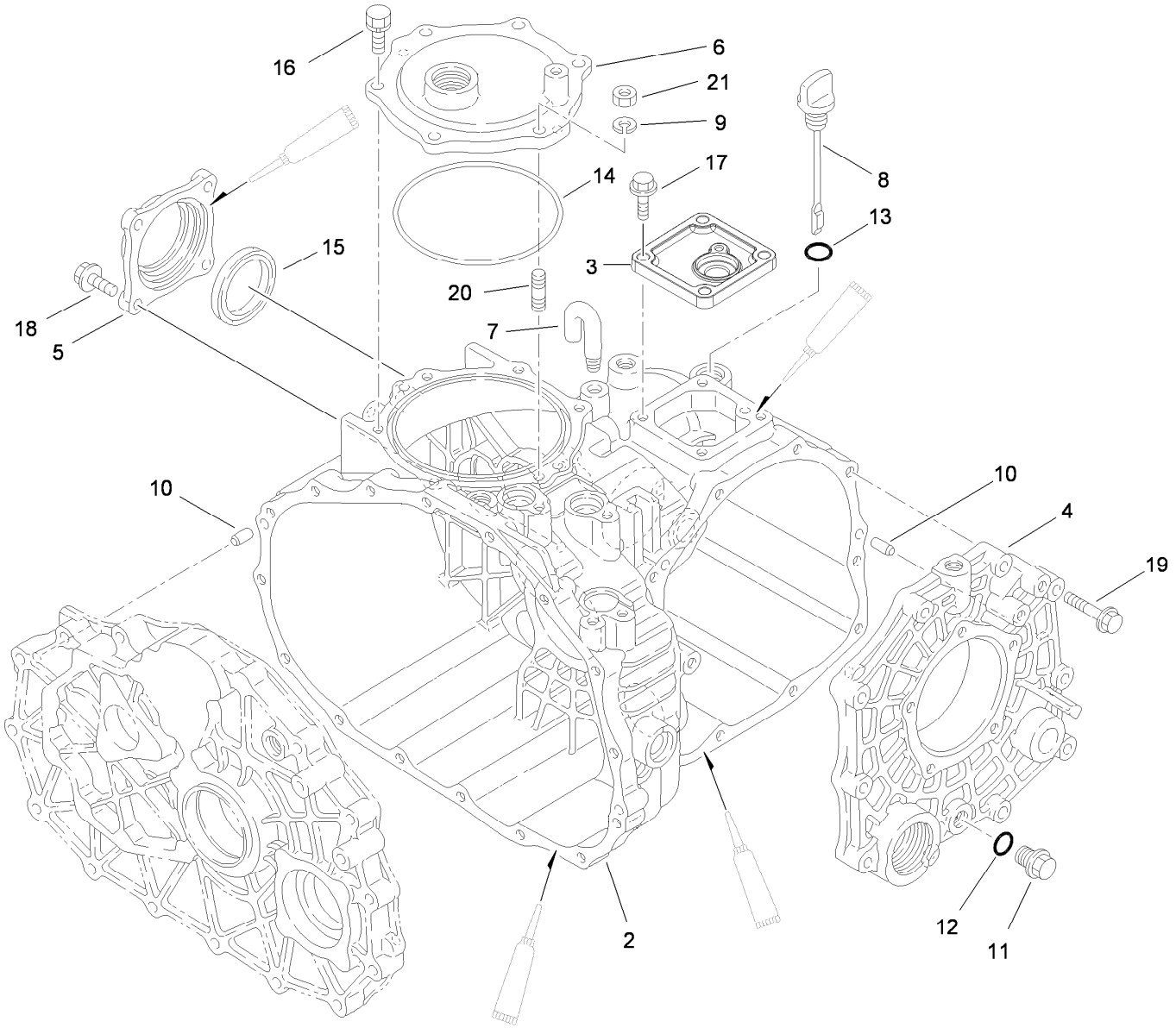


# Case Assembly
# Transaxle Assembly No. 115-7783

| Ref. | Part Number | Qty. | Description |
|---|---|---|---|
| 2 | 92-0651 | 1 | Case-Transmission |
| 3 | 92-0810 | 1 | Cover-Upper, Sensor |
| 4 | 92-0653 | 1 | Cover-Side |
| 5 | 92-0655 | 1 | Cover-Seal, Axle |
| 6 | 92-0656 | 1 | Cover-Upper, PTO |
| 7 | 92-0743 | 1 | Breather-Air |
| 8 | 92-0662 | 1 | Cap-Oil |
| 9 | 92-0762 | 1 | Washer-Spring |
| 10 | 92-0765 | 4 | Pin-Parallel |
| 11 | 92-0773 | 1 | Plug-Drain |

| Ref. | Part Number | Qty. | Description |
|---|---|---|---|
| 12 | 92-0787 | 1 | O-Ring |
| 13 | 92-0788 | 1 | O-Ring |
| 14 | 92-0790 | 1 | O-Ring |
| 15 | 92-0793 | 1 | Seal-Oil |
| 16 | 92-0796 | 5 | Bolt |
| 17 | 33104-025 | 4 | Screw-HHF |
| 18 | 33104-025 | 4 | Screw-HHF |
| 19 | 33104-040 | 10 | Screw-HHF |
| 20 | 92-0805 | 1 | Bolt 8X20 |
| 21 | 68-9400 | 1 | Nut-Flange |

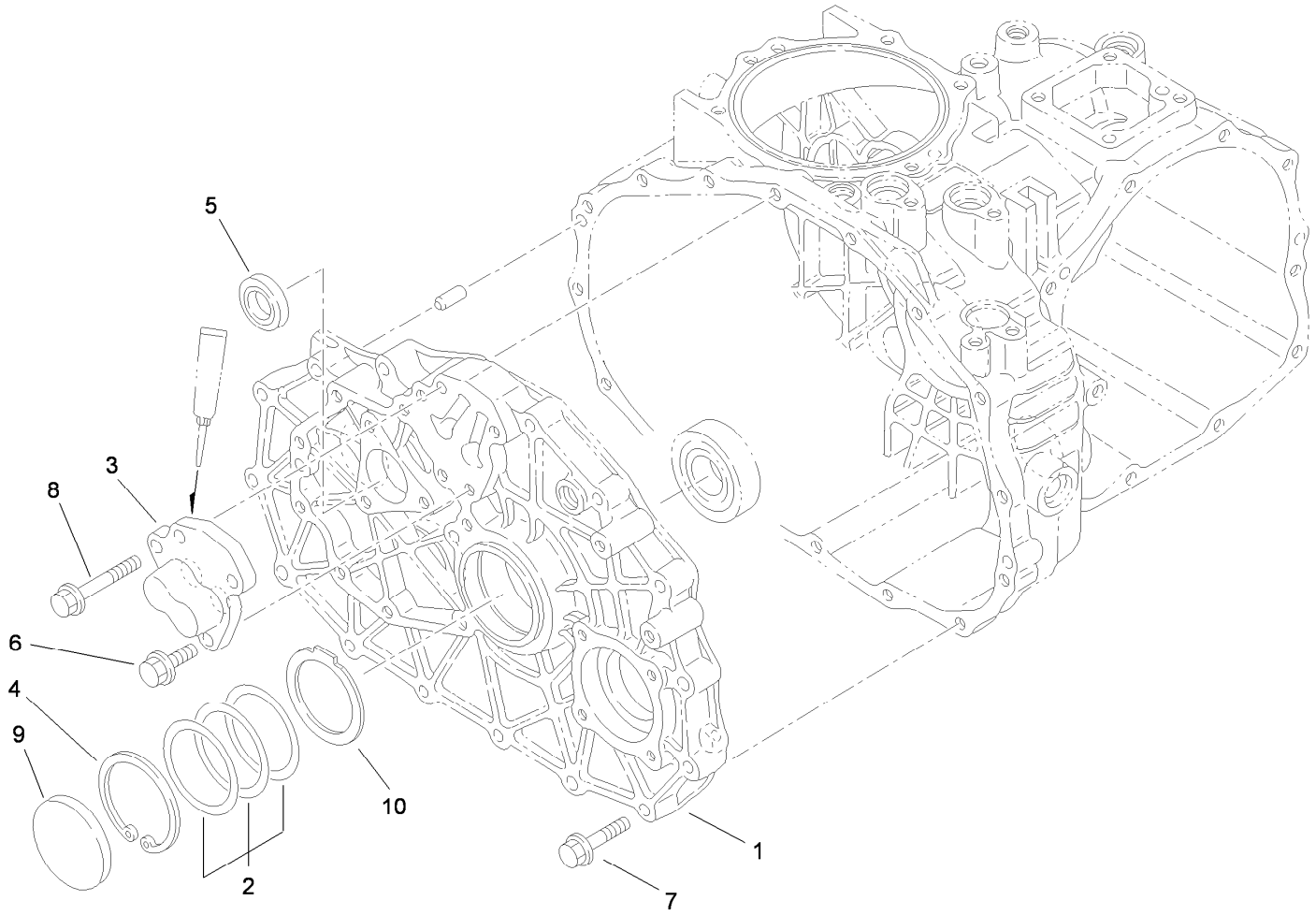


# Center Plate Assembly
# Transaxle Assembly No. 115-7783

| *Ref.* | *Part Number* | *Qty.* | *Description* |
|---|---|---|---|
| 1 | 100-4461 | 1 | Plate-Center |
| 2 | 100-4460 | 1 | Shim-Set |
| 3 | 92-0706 | 1 | Shaft-Fork |
| 4 | 92-0759 | 1 | Ring-Snap |
| 5 | 92-0791 | 1 | Seal-Oil |
| 6 | 33104-025 | 3 | Screw-HHF |
| 7 | 33104-040 | 15 | Screw-HHF |
| 8 | 33104-050 | 1 | Screw-HHF |
| 9 | 92-0807 | 1 | Cap-Sealing |
| 10 | 100-4465 | 1 | Shim (W/Tab) |

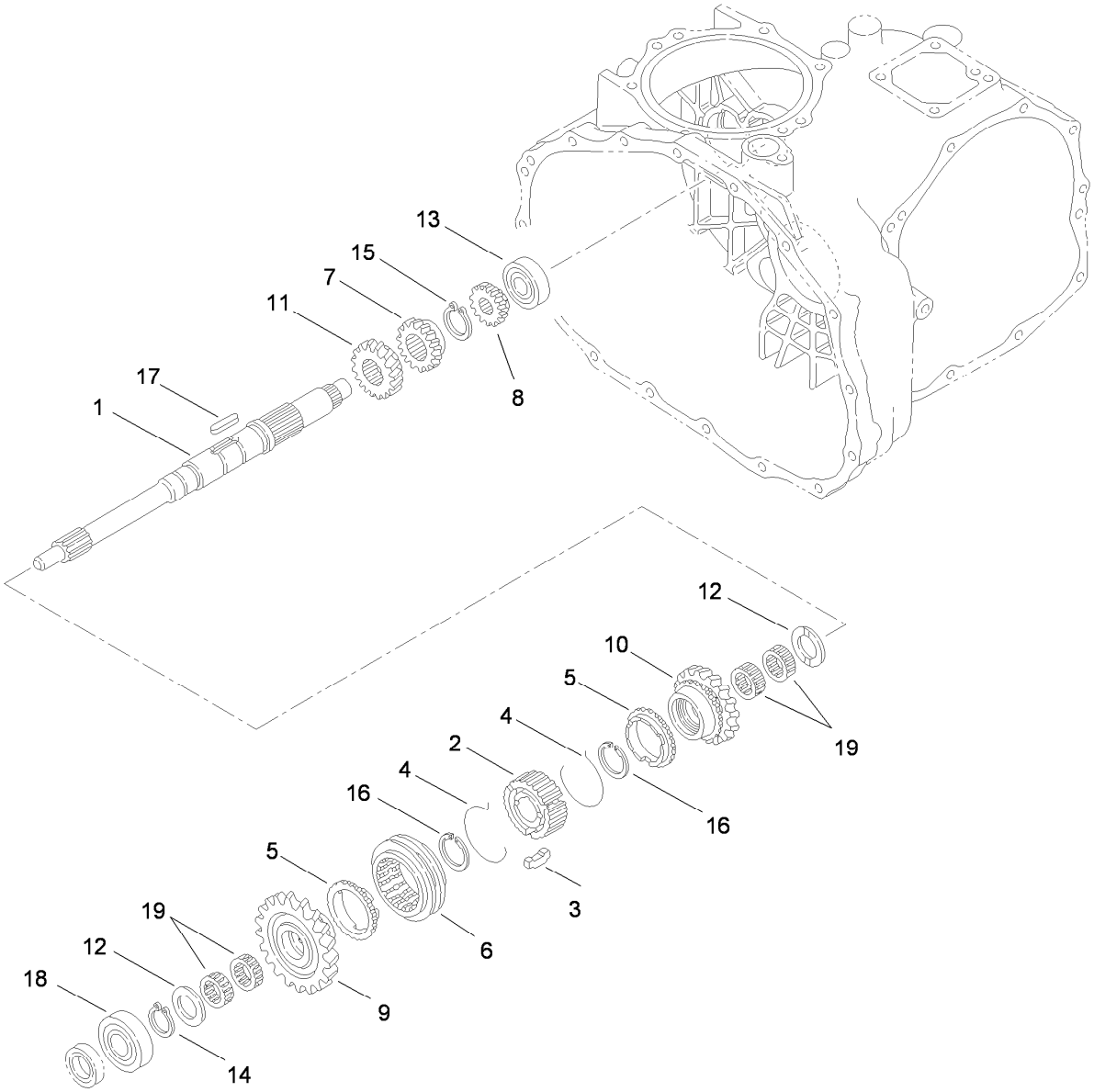


# Main Shaft Assembly
# Transaxle Assembly No. 115-7783

| Ref. | Part Number | Qty. | Description |
|---|---|---|---|
| 1 | 92-0663 | 1 | Shaft-Main |
| 2 | 92-0664 | 1 | Hub-Synchro |
| 3 | 92-0665 | 3 | Key-Synchro |
| 4 | 92-0666 | 2 | Spring-Synchro |
| 5 | 92-0667 | 2 | Ring-Synchro |
| 6 | 92-0668 | 1 | Shifter-Synchro |
| 7 | 92-0672 | 1 | Gear-Main, 18 Tooth |
| 8 | 92-0673 | 1 | Gear-Main, 14 Tooth |
| 9 | 110-2521 | 1 | Gear-Main, 27 Tooth |
| 10 | 110-2522 | 1 | Gear- Main, 24 Tooth |

| Ref. | Part Number | Qty. | Description |
|---|---|---|---|
| 11 | 92-0687 | 1 | Gear-Main, 16 Tooth |
| 12 | 92-0740 | 2 | Washer-Thrust |
| 13 | 92-0650 | 1 | Bearing |
| 14 | 92-0753 | 1 | Ring-Snap |
| 15 | 92-0754 | 1 | Ring-Snap |
| 16 | 92-0763 | 2 | Ring-Snap |
| 17 | 92-0772 | 1 | Key |
| 18 | 251-8 | 1 | Bearing-Ball |
| 19 | 92-0781 | 4 | Bearing-Needle |

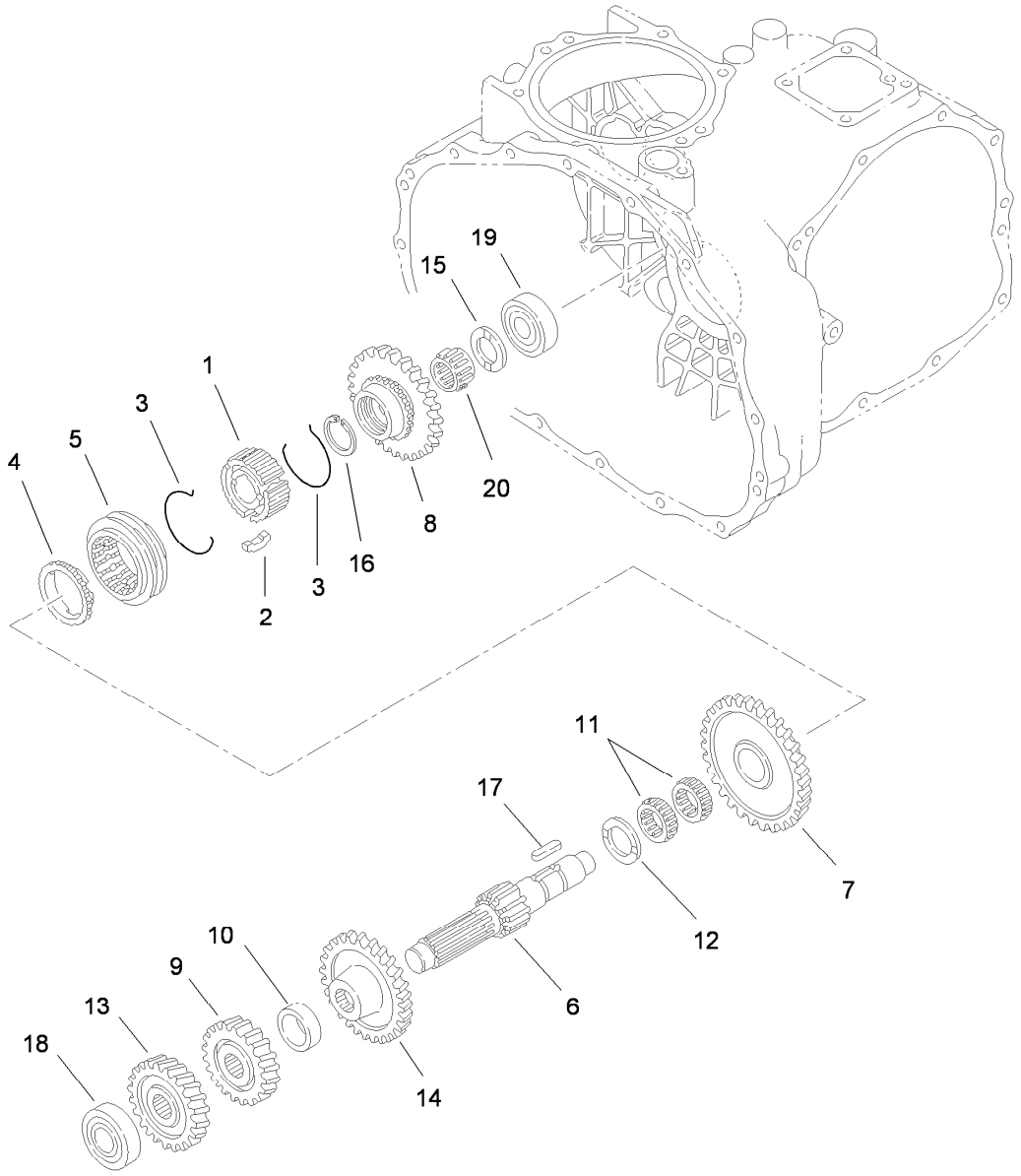


# Reduction Shaft Assembly
# Transaxle Assembly No. 115-7783

| Ref. | Part Number | Qty. | Description |
|---|---|---|---|
| 1 | 92-0664 | 1 | Hub-Synchro |
| 2 | 92-0665 | 3 | Key-Synchro |
| 3 | 92-0666 | 2 | Spring-Synchro |
| 4 | 92-0667 | 1 | Ring-Synchro |
| 5 | 92-0668 | 1 | Shifter-Synchro |
| 6 | 92-0674 | 1 | Shaft-Reduction |
| 7 | 110-2524 | 1 | Gear- Reduction, 49 Tooth |
| 8 | 92-0819 | 1 | Gear-Reduction, 40 Tooth |
| 9 | 92-0679 | 1 | Gear-Reduction, H23 Tooth |
| 10 | 92-0680 | 1 | Collar |

| Ref. | Part Number | Qty. | Description |
|---|---|---|---|
| 11 | 92-0681 | 2 | Bearing-Needle |
| 12 | 92-0682 | 1 | Washer-Thrust |
| 13 | 92-0822 | 1 | Gear-Reduction, 28 Tooth |
| 14 | 92-0823 | 1 | Gear-Reduction, 43 Tooth |
| 15 | 92-0740 | 1 | Washer-Thrust |
| 16 | 92-0763 | 1 | Ring-Snap |
| 17 | 92-0772 | 1 | Key |
| 18 | 105-7985 | 1 | Bearing |
| 19 | 92-0778 | 1 | Bearing |
| 20 | 92-0782 | 1 | Bearing-Needle |

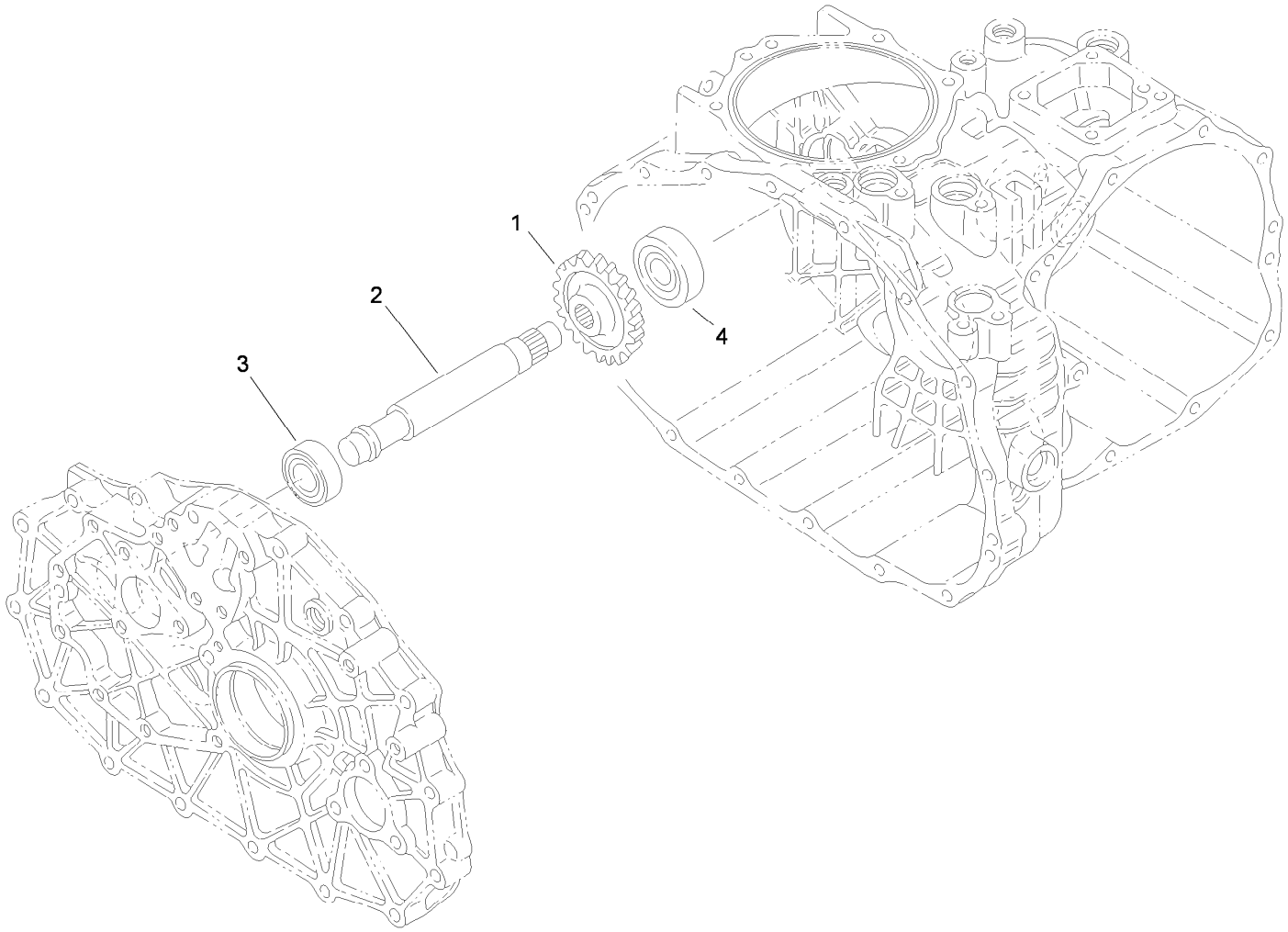


# Reverse Shaft Assembly
# Transaxle Assembly No. 115-7783

| *Ref.* | *Part Number* | *Qty.* | *Description* |
|---|---|---|---|
| 1 | 92-0684 | 1 | Gear-Reverse, 33 Tooth |
| 2 | 92-0824 | 1 | Shaft-Idler, Reverse |
| 3 | 251-346 | 1 | Bearing-Ball |
| 4 | 92-0778 | 1 | Bearing |

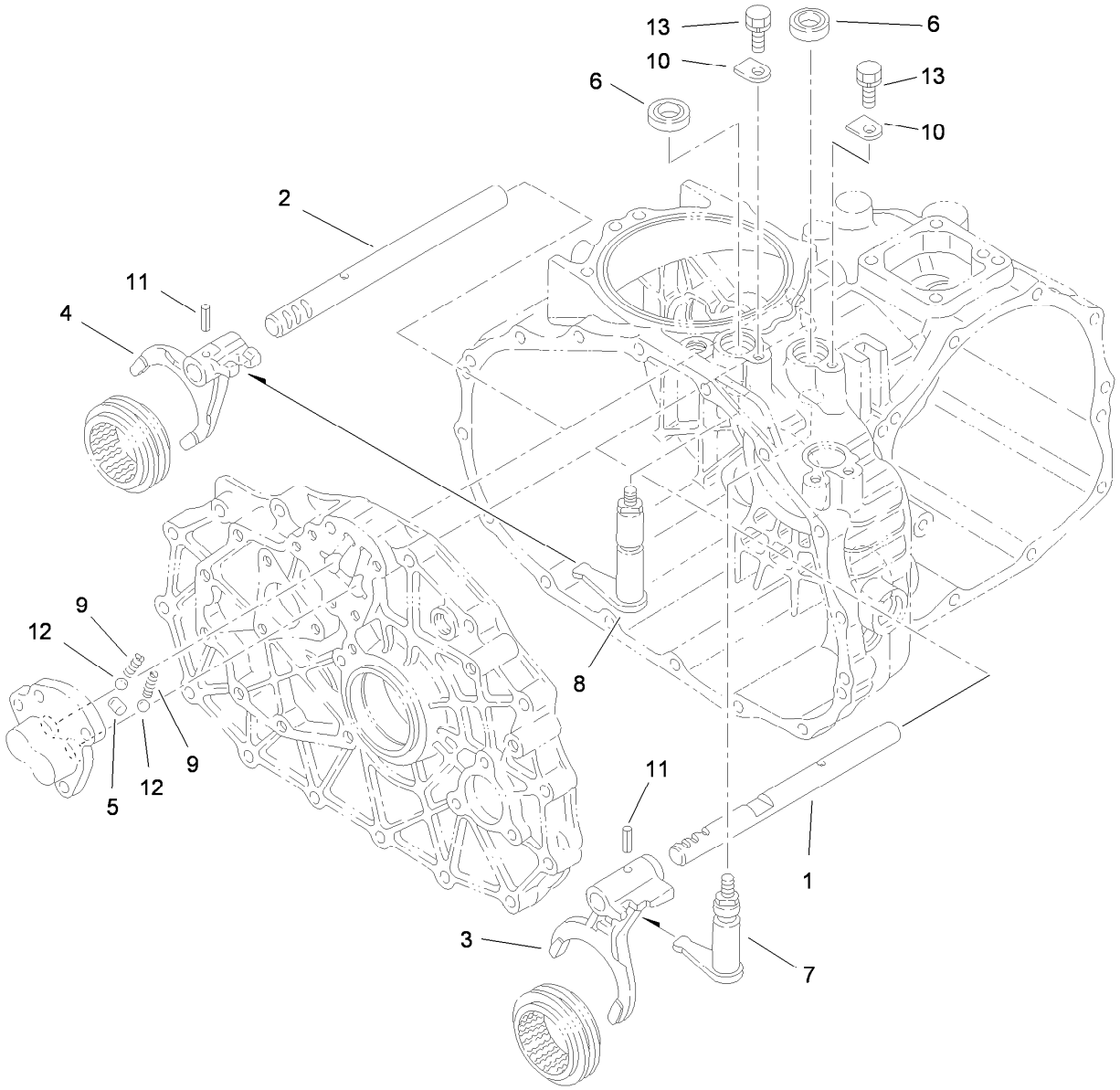


# Main Shift Assembly
# Transaxle Assembly No. 115-7783

| *Ref.* | *Part Number* | *Qty.* | *Description* |
|---|---|---|---|
| 1 | 92-0698 | 1 | Shaft-Fork |
| 2 | 92-0699 | 1 | Shaft-Fork |
| 3 | 92-0700 | 1 | Fork-Shift |
| 4 | 92-0701 | 1 | Fork-Shift |
| 5 | 92-0705 | 1 | Lock-Spindle |
| 6 | 92-0729 | 2 | Seal-Oil |
| 7 | 92-0816 | 1 | Arm-Shift |
| 8 | 92-0817 | 1 | Arm-Shift |
| 9 | 92-0731 | 2 | Spring |
| 10 | 92-0732 | 2 | Plate-Keeper |
| 11 | 92-0769 | 2 | Pin-Roll |
| 12 | 92-0785 | 2 | Ball-Steel |
| 13 | 33104-016 | 2 | Screw-HHF |

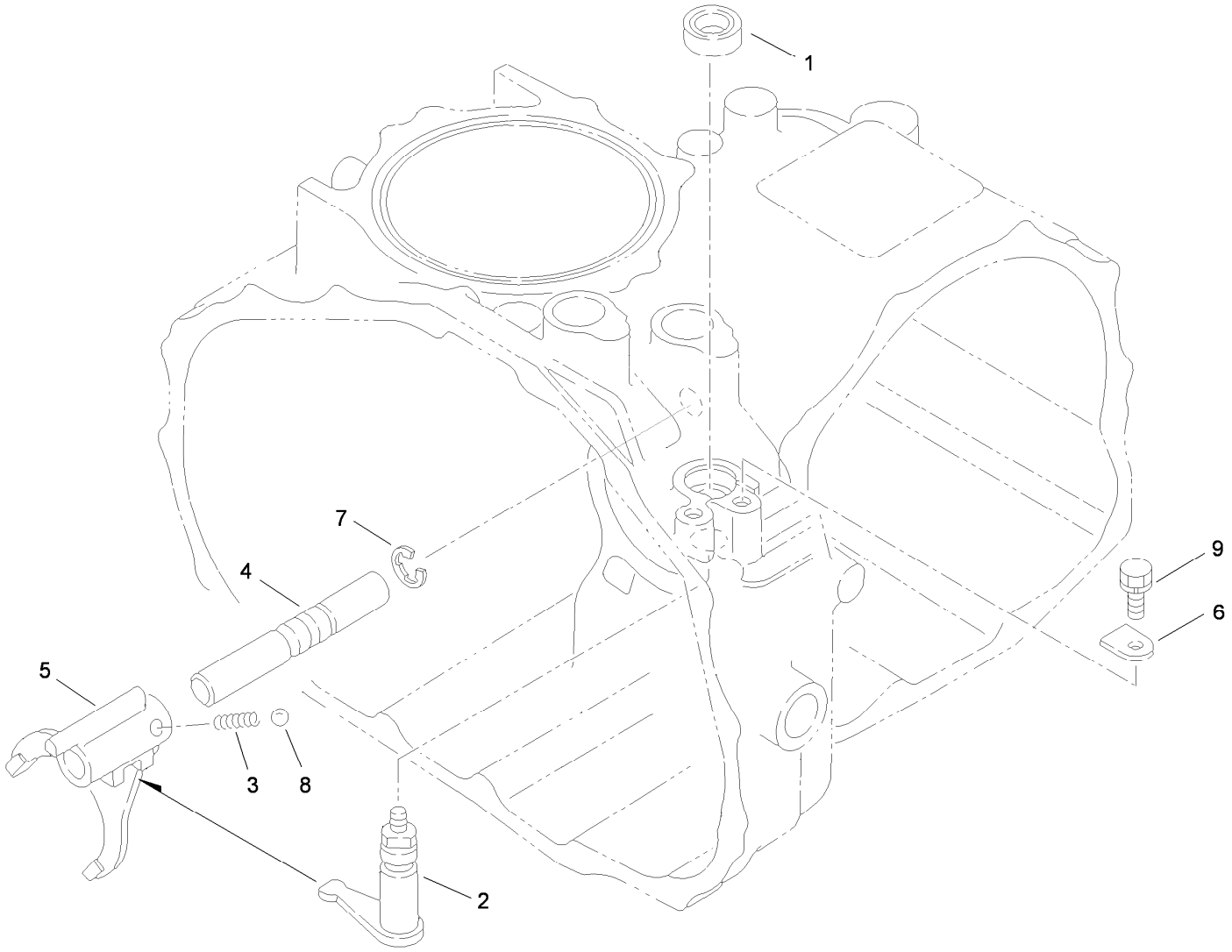


# Hi-Lo Shift Assembly
# Transaxle Assembly No. 115-7783

| *Ref.* | *Part Number* | *Qty.* | *Description* |
|---|---|---|---|
| 1 | 92-0729 | 1 | Seal-Oil |
| 2 | 92-0818 | 1 | Arm-Shift |
| 3 | 92-0731 | 1 | Spring |
| 4 | 92-0708 | 1 | Shaft-Fork |
| 5 | 92-0709 | 1 | Fork-Shift |
| 6 | 92-0732 | 1 | Plate-Keeper |
| 7 | 92-0761 | 1 | Ring-E |
| 8 | 92-0785 | 1 | Ball-Steel |
| 9 | 33104-016 | 1 | Screw-HHF |

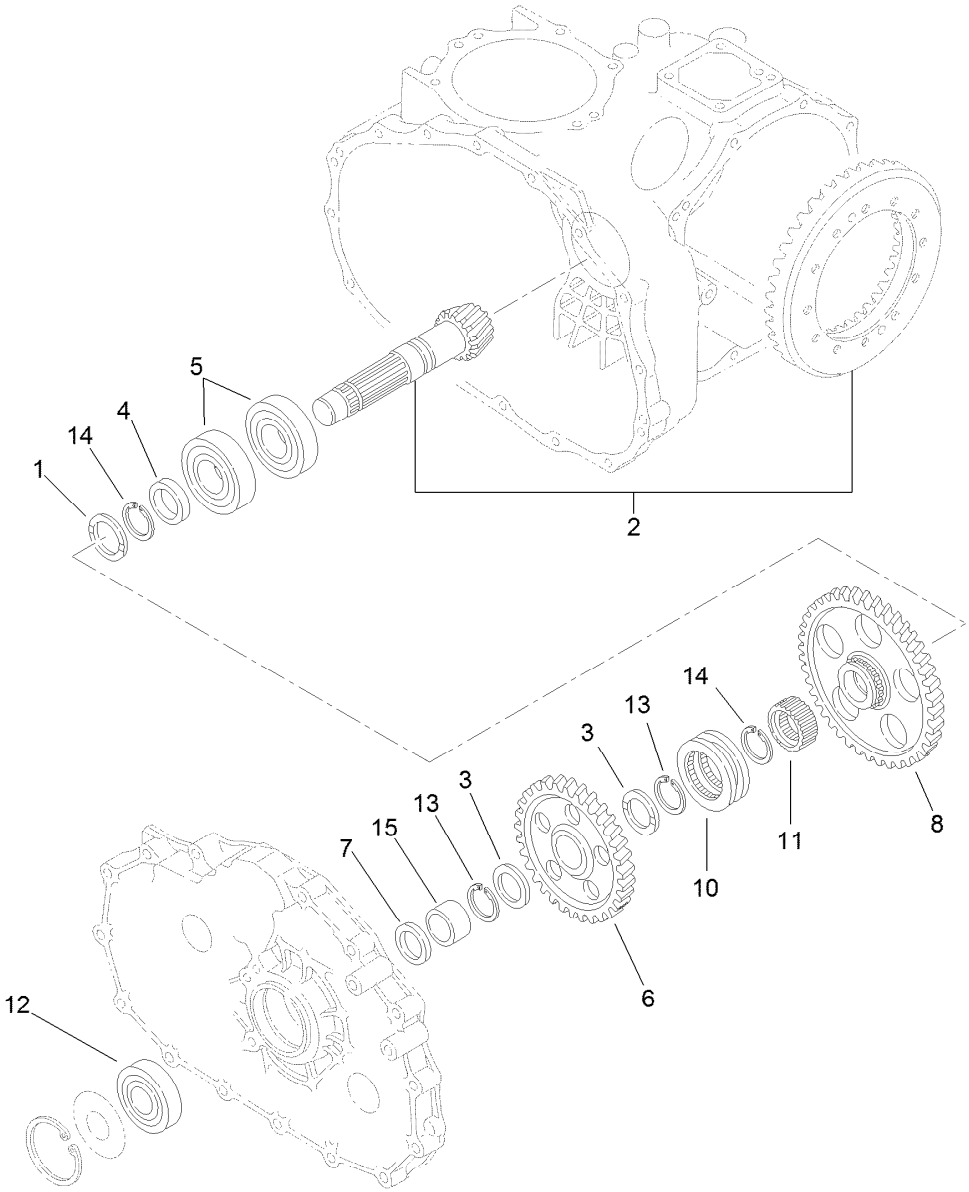


# Countershaft Assembly
# Transaxle Assembly No. 115-7783

| *Ref.* | *Part Number* | *Qty.* | *Description* |
|---|---|---|---|
| 1 | 92-0741 | 1 | Washer-Thrust |
| 2 | 105-7983 | 1 | Countershaft And Ring Gear ASM |
| 3 | 92-0711 | 2 | Washer-Thrust |
| 4 | 92-0713 | 1 | Collar |
| 5 | 92-0714 | 2 | Bearing |
| 6 | 92-0715 | 1 | Gear-Countershaft |
| 7 | 92-0716 | 1 | Collar |
| 8 | 92-0717 | 1 | Gear-Countershaft |
| 10 | 92-0718 | 1 | Shifter |
| 11 | 105-7986 | 1 | Collar-Spline |
| 12 | 92-0712 | 1 | Bearing-Ball |
| 13 | 105-7987 | 2 | Ring-Snap |
| 14 | 92-0755 | 2 | Ring-Snap |
| 15 | 92-0783 | 1 | Race-Inner |

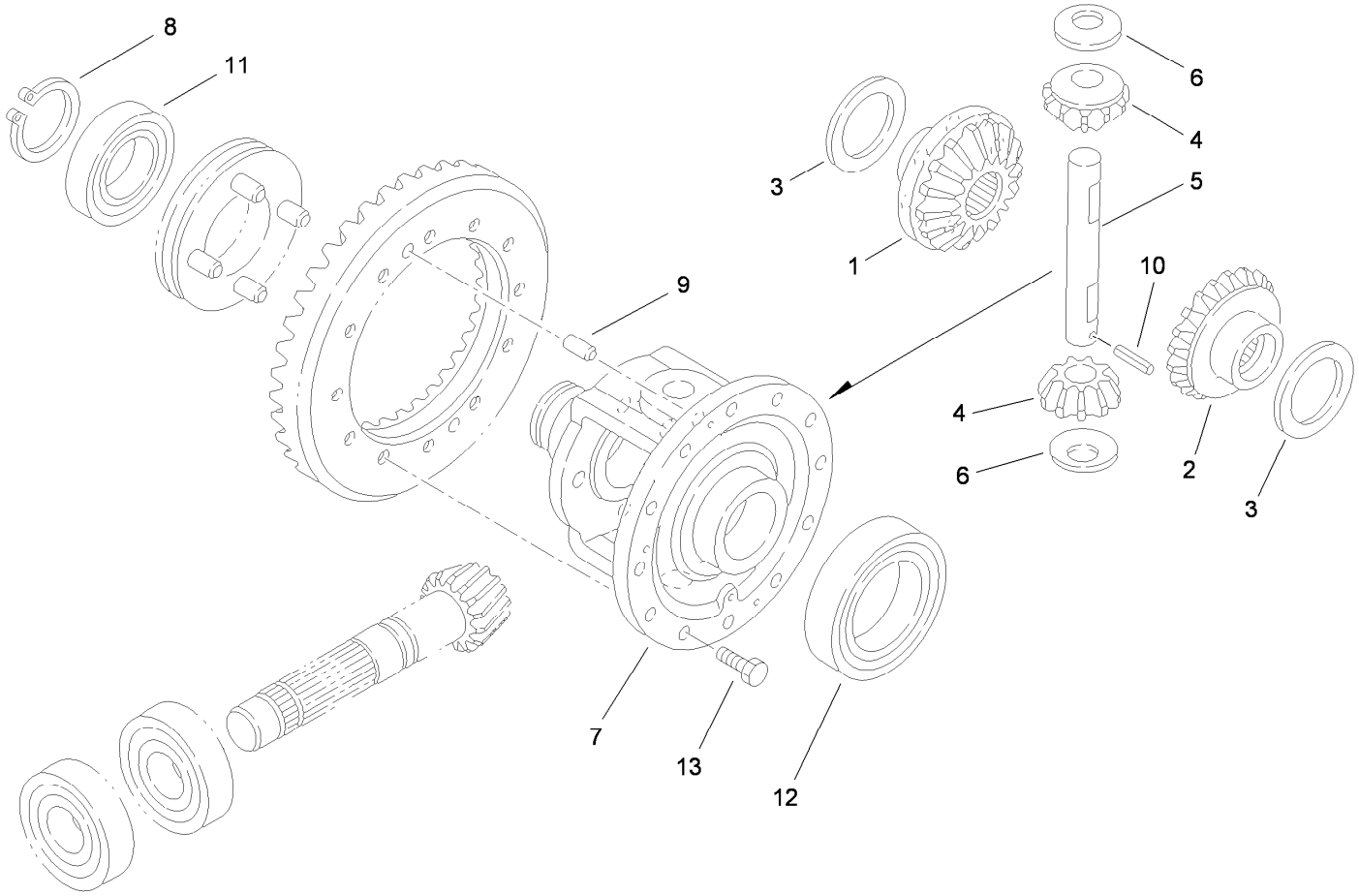


# Differential Gear Assembly
# Transaxle Assembly No. 115-7783

| *Ref.* | *Part Number* | *Qty.* | *Description* |
|---|---|---|---|
| 1 | 92-0745 | 1 | Gear-Side, LH |
| 2 | 92-0746 | 1 | Gear-Side, RH |
| 3 | 92-0747 | 2 | Side-Gear, Left Inner |
| 4 | 92-0748 | 2 | Pinion-Differential |
| 5 | 92-0749 | 1 | Shaft-Pinion |
| 6 | 92-0750 | 2 | Washer |
| 7 | 92-0720 | 1 | Case-Differential |
| 8 | 92-0756 | 1 | Ring-Snap |
| 9 | 92-0765 | 2 | Pin-Parallel |
| 10 | 92-0768 | 1 | Pin-Roll, Spring |
| 11 | 92-0775 | 1 | Bearing |
| 12 | 92-0776 | 1 | Bearing |
| 13 | 92-0803 | 12 | Bolt |

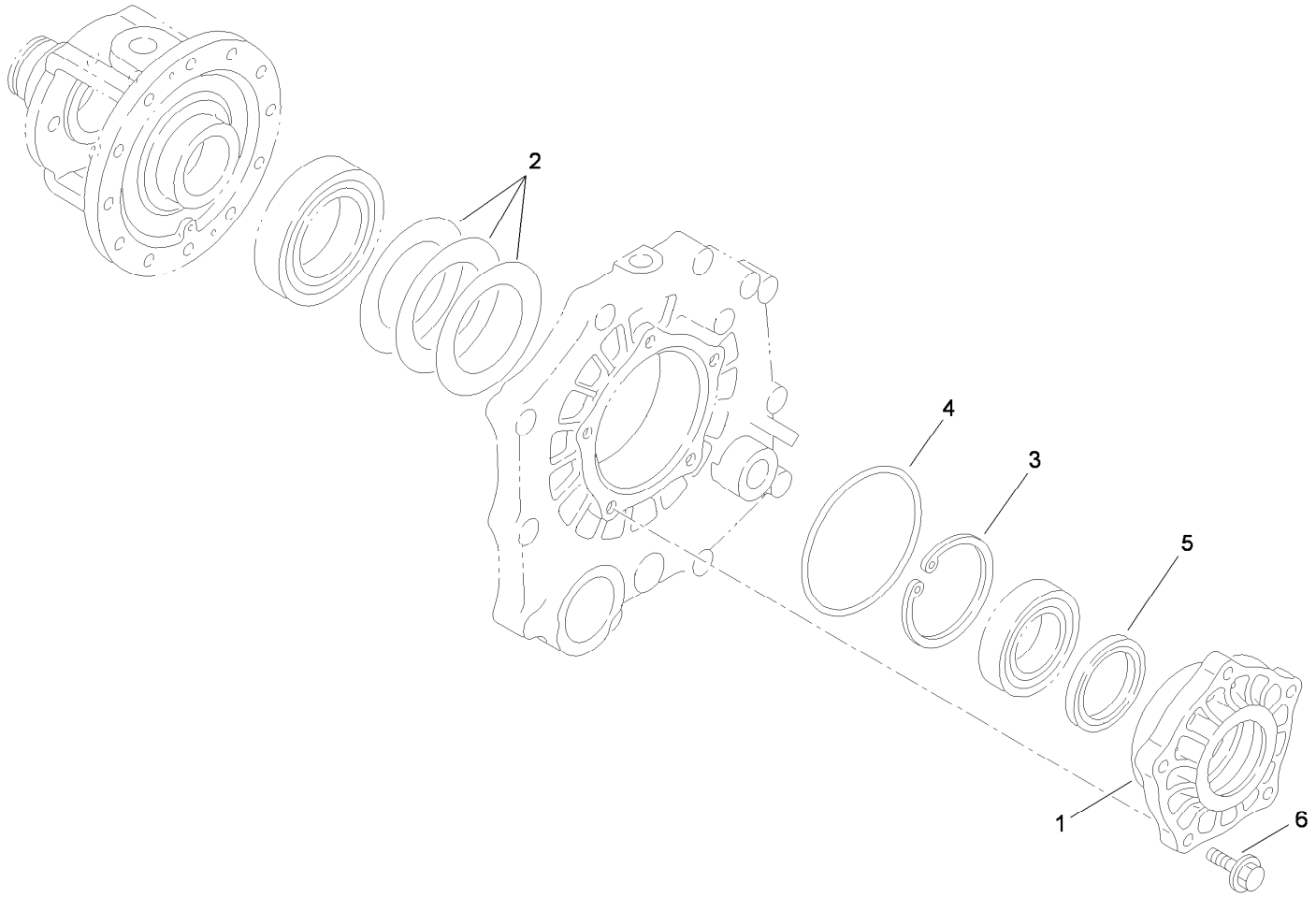


# Differential Carrier Assembly
# Transaxle Assembly No. 115-7783

| *Ref.* | *Part Number* | *Qty.* | *Description* |
|---|---|---|---|
| 1 | 92-0654 | 1 | Carrier-Differential |
| 2 | 92-0809 | 1 | Set-Shim |
| 3 | 92-0760 | 1 | Ring-Snap |
| 4 | 92-0789 | 1 | O-Ring |
| 5 | 92-0793 | 1 | Seal-Oil |
| 6 | 33104-030 | 5 | Screw-HHF |

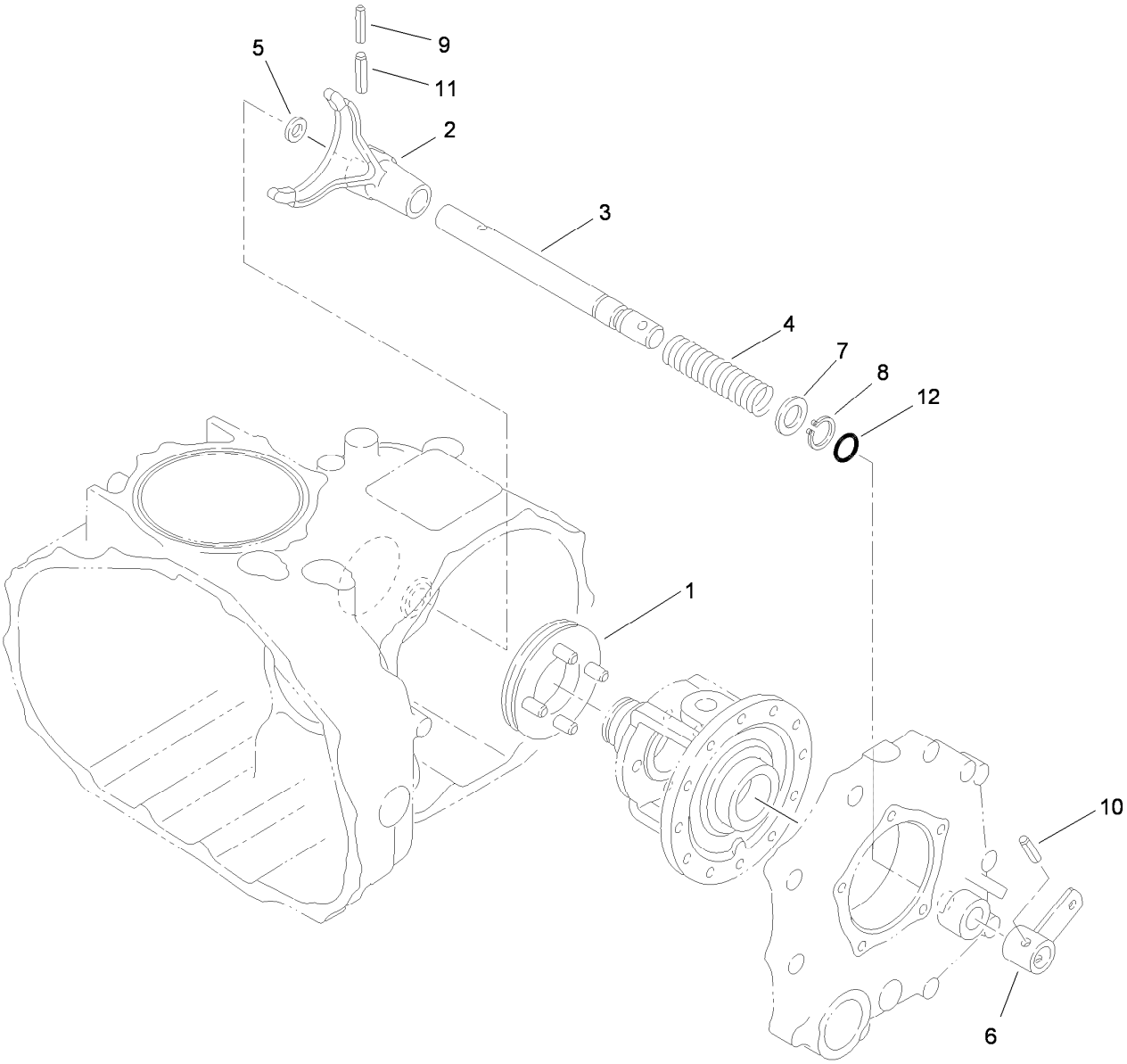


# Differential Lock Assembly
# Transaxle Assembly No. 115-7783

| *Ref.* | *Part Number* | *Qty.* | *Description* |
|---|---|---|---|
| 1 | 92-0730 | 1 | Slider-Differential, Lock |
| 2 | 92-0721 | 1 | Fork-Lock, Differential |
| 3 | 92-0722 | 1 | Shaft-Fork, Lock Differential |
| 4 | 92-0723 | 1 | Spring-Lock, Differential |
| 5 | 92-0744 | 1 | Washer |
| 6 | 92-0724 | 1 | Arm-Lock, Differential |
| 7 | 92-0733 | 1 | Washer |
| 8 | 92-0753 | 1 | Ring-Snap |
| 9 | 92-0768 | 1 | Pin-Roll, Spring |
| 10 | 92-0770 | 1 | Pin-Roll, Spring |
| 11 | 92-0771 | 1 | Pin-Roll, Spring |
| 12 | 92-0787 | 1 | O-Ring |

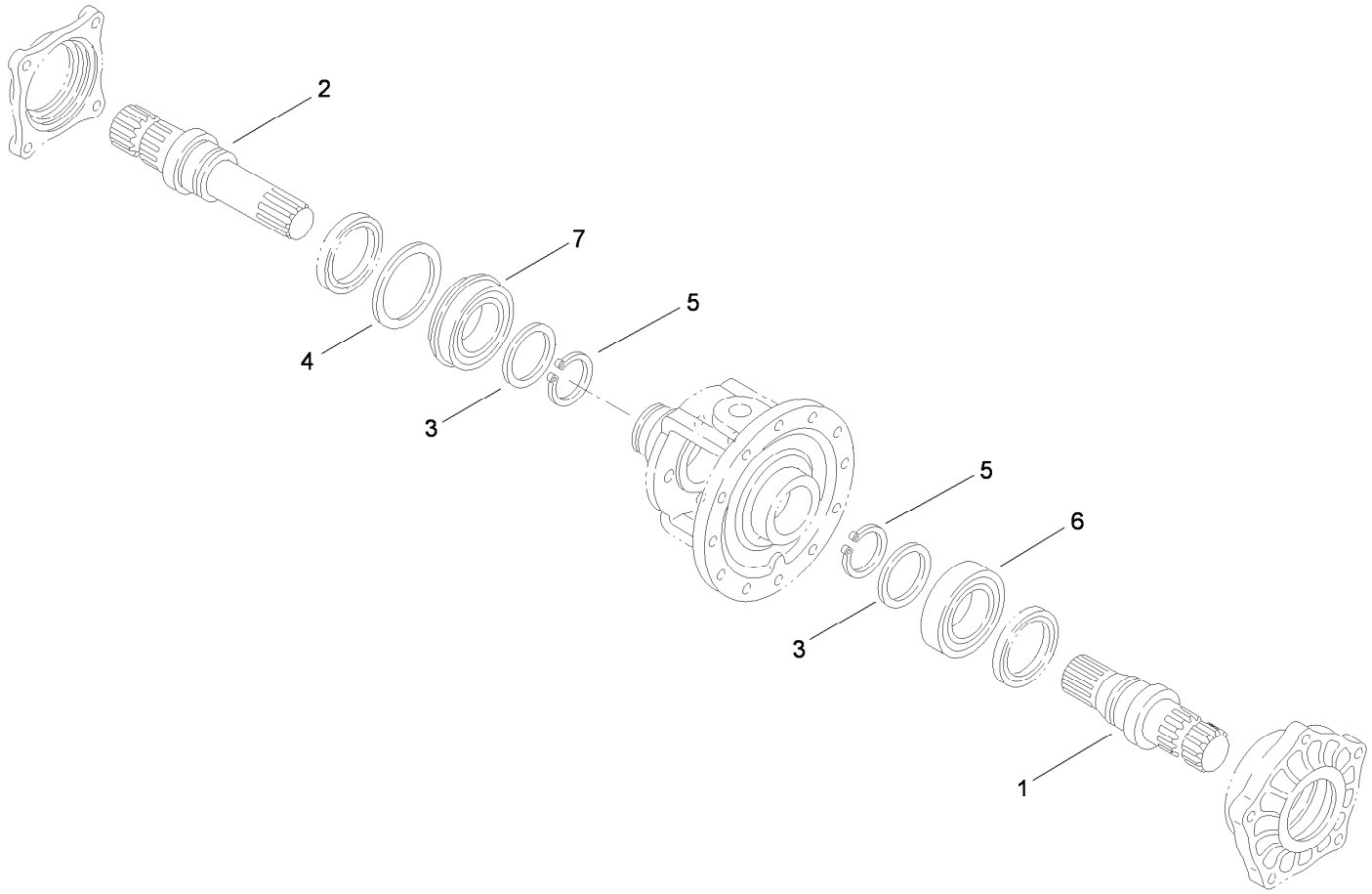


# Axle Shaft Assembly
# Transaxle Assembly No. 115-7783

| *Ref.* | *Part Number* | *Qty.* | *Description* |
|---|---|---|---|
| 1 | 92-0725 | 1 | Shaft-Axle, Left |
| 2 | 92-0726 | 1 | Shaft-Axle, Right |
| 3 | 92-0727 | 2 | Washer |
| 4 | 92-0728 | 1 | Washer |
| 5 | 92-0756 | 2 | Ring-Snap |
| 6 | 92-0775 | 1 | Bearing |
| 7 | 92-0780 | 1 | Bearing |

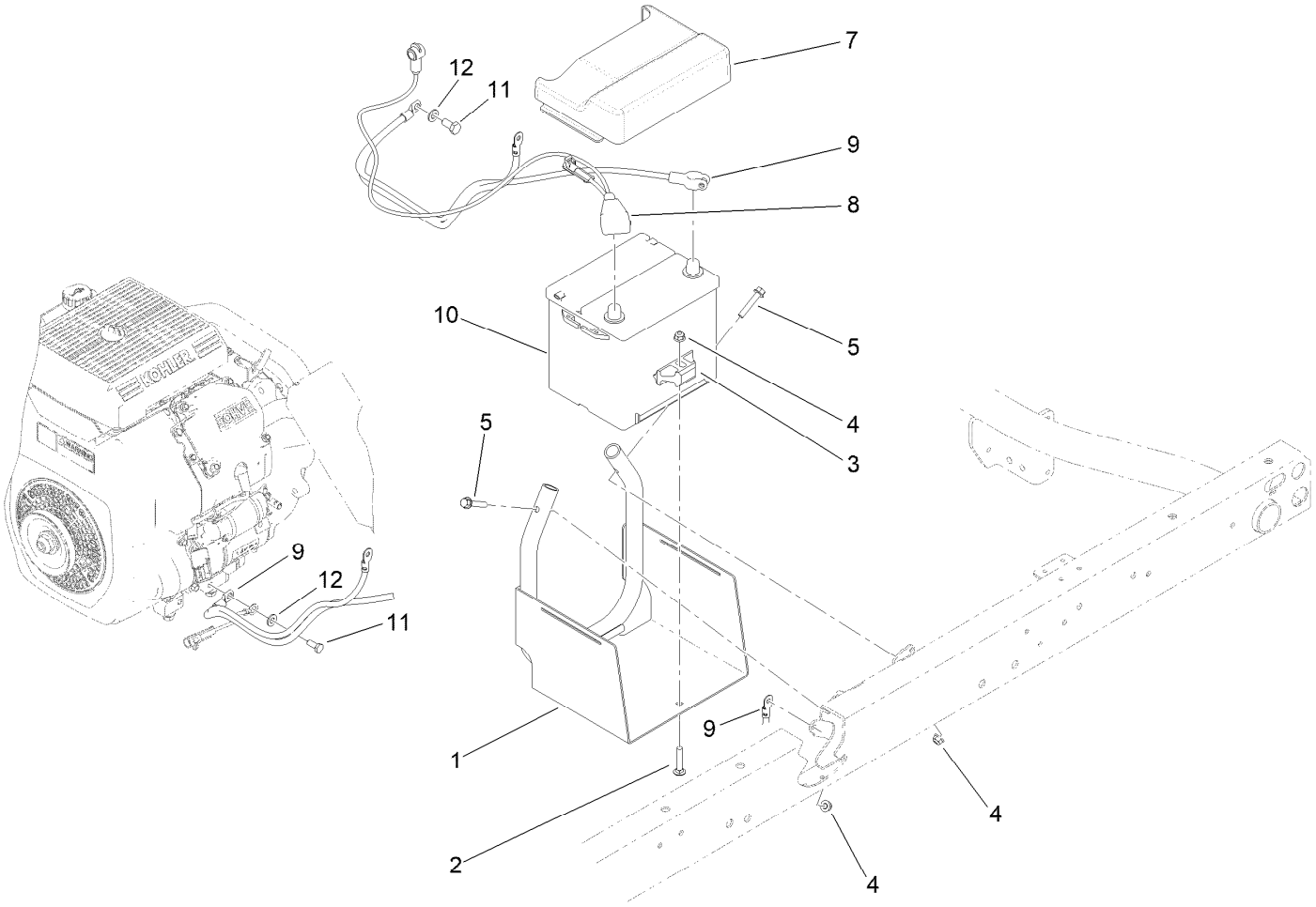


# Battery Assembly

| Ref. | Part Number | Qty. | Description |
|---|---|---|---|
| 1 | 115-2237-03 | 1 | Tray-Battery |
| 2 | 3230-5 | 1 | Bolt-CARR |
| 3 | 138-6335 | 1 | Retainer-Battery |
| 4 | 104-8300 | 3 | Nut-HF, NI |
| 5 | 94-5780 | 2 | Screw-HWH |
| 7 | 119-9496 | 1 | Cover-Battery |
| 8 | 122-0204 | 1 | Cable-Battery, Positive |
| 9 | 122-0120 | 1 | Cable-Battery, Negative |
| 10 | 106-5187 | 1 | Battery- Dry, 12V, 525 CCA |
| 11 | 33114-020 | 1 | Screw-HH |
| 12 | 33094-00 | 1 | Washer-Plain |

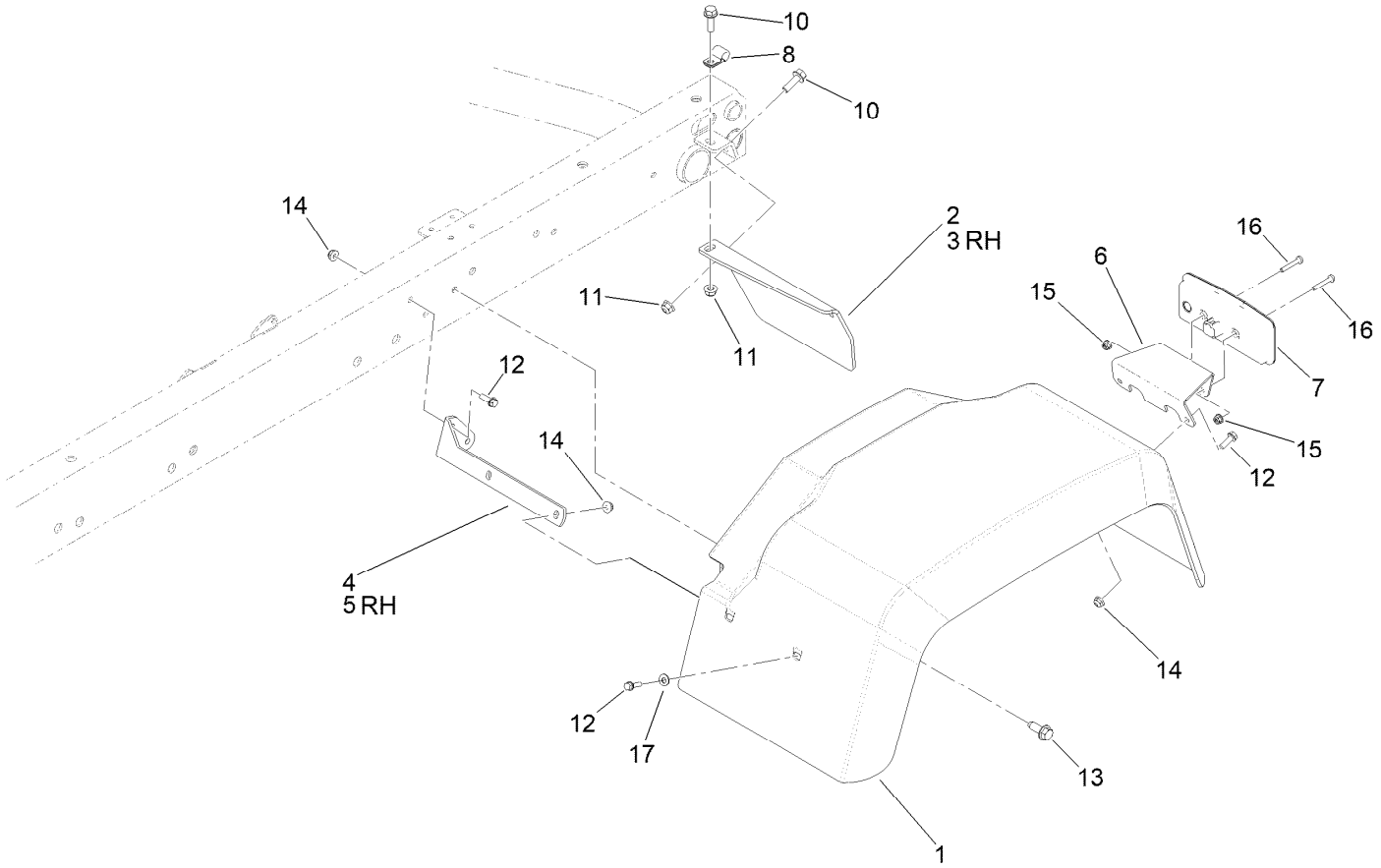


# Tail Light and Fender Assembly

| Ref. | Part Number | Qty. | Description |
|---|---|---|---|
| 1 | 132-6701 | 2 | Fender-Rear |
| 2 | 93-8943-03 | 1 | Bracket-Fender, Rear (LH) |
| 3 | 93-8944-03 | 1 | Bracket-Fender, Rear (RH) |
| 4 | 93-8941-03 | 1 | Bracket-Fender, Front (LH) |
| 5 | 93-8942-03 | 1 | Bracket-Fender, Front (RH) |
| 6 | 144-2190-03 | 2 | Bracket-Tail Light, LED |
| 7 | 139-2071 | 2 | Light-Rear Tail/Stop/Turn |
| 8 | 2412-93 | 2 | Clamp-R |

| Ref. | Part Number | Qty. | Description |
|---|---|---|---|
| 10 | 3234-17 | 4 | Screw-HHF |
| 11 | 104-8300 | 4 | Nut-HF, NI |
| 12 | 32105-15 | 12 | Screw-HWH |
| 13 | 126-1696 | 6 | Screw-HWHTF |
| 14 | 104-7201 | 12 | Nut-HF, NI |
| 15 | 120-4578 | 4 | Nut-HF |
| 16 | 3250-52 | 4 | Screw-PPH |
| 17 | 3256-1 | 4 | Washer-Flat |

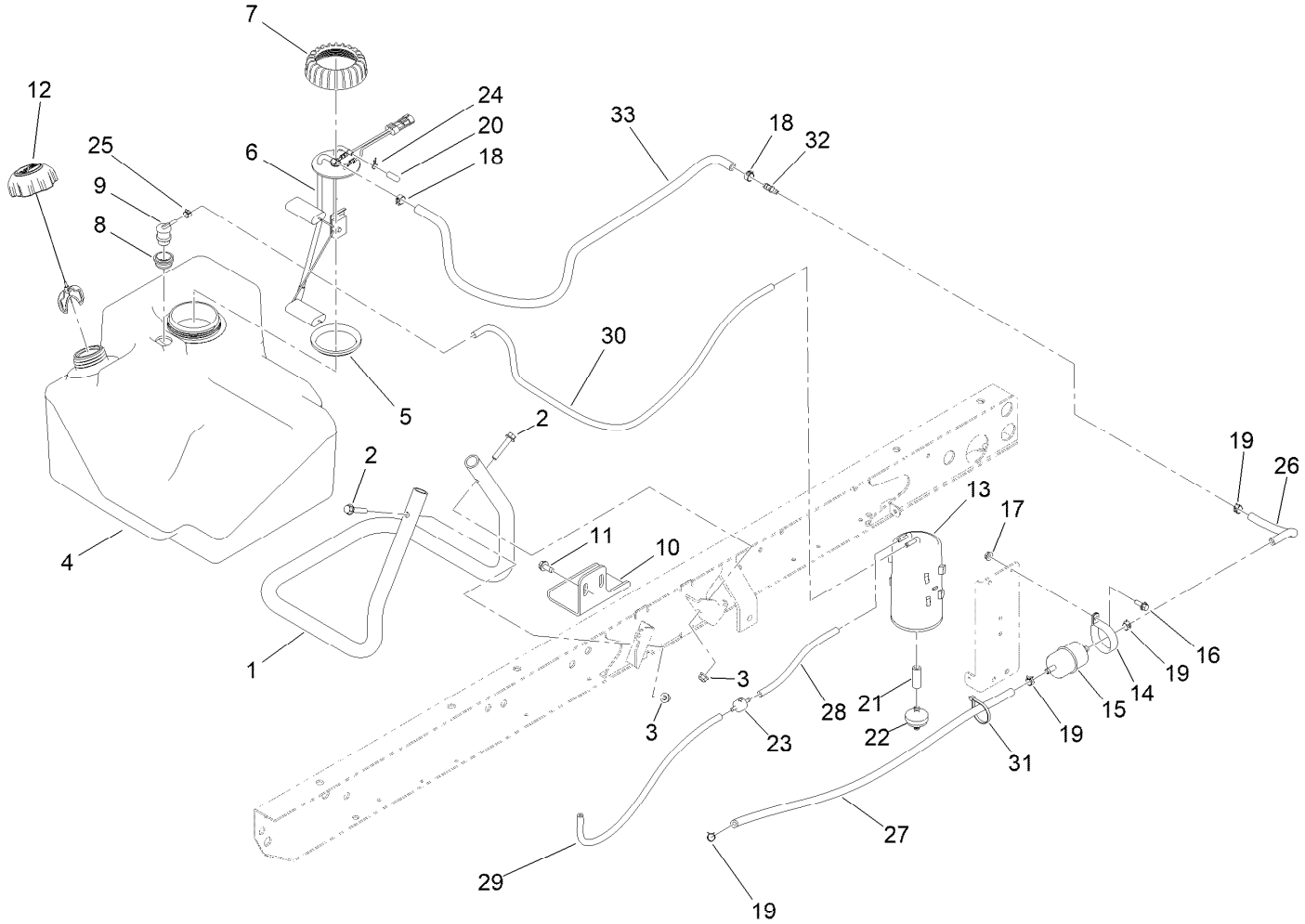


# Fuel System Assembly

| Ref. | Part Number | Qty. | Description |
|---|---|---|---|
| 1 | 115-7767-0P | 1 | Tube-Support |
| 2 | 94-5780 | 2 | Screw-HWH |
| 3 | 104-8300 | 4 | Nut-HF, NI |
| 4 | 115-7700 | 1 | Tank-Fuel |
| 5 | 140-6246 | 1 | Gasket-Pump, Fuel, |
| 6 | 114-8348 | 1 | Sender-Fuel |
| 7 | 140-6245 | 1 | Cap-Pump, Fuel |
| 8 | 114-0284 | 1 | Grommet |
| 9 | 114-0285 | 1 | Valve-Rollover |
| 10 | 114-8404 | 1 | Plate-Retainer |
| 11 | 32144-70 | 2 | Screw-HWHTF |
| 12 | 137-4127 | 1 | Cap-Fuel |
| 13 | 127-8685 | 1 | Canister-Carbon |
| 14 | 2412-148 | 1 | Clamp-R |
| 15 | 108-3854 | 1 | Filter-Fuel |
| 16 | 3234-4 | 1 | Screw-HHF |
| 17 | 32128-33 | 1 | Nut-HF |

| Ref. | Part Number | Qty. | Description |
|---|---|---|---|
| 18 | 92-2379 | 2 | Clamp-Hose |
| 19 | 2412-98 | 4 | Clamp-Hose |
| 20 | 115-2403 | 1 | Cap |
| 21 | 106-5317 | 1 | Hose-Fuel |
| 22 | 115-7854 | 1 | Filter-Fuel, Inline |
| 23 | 133-8499 | 1 | Valve-Check, Vacuum |
| 24 | 2412-79 | 1 | Clamp-Hose |
| 25 | 2412-146 | 1 | Clamp-Hose |
| 26 | 109-0293 | 1 | Hose-Fuel |
| 27 | 109-0281 | 1 | Hose-Fuel |
| 28 | 115-7871 | 1 | Hose-Fuel |
| 29 | 115-7872 | 1 | Hose-Fuel |
| 30 | 110-3254 | 1 | Hose-Fuel |
| 31 | 3290-379 | 1 | Tie-Cable |
| 32 | 103-2595 | 1 | Connector |
| 33 | 133-8551 | 1 | Hose-Fuel |

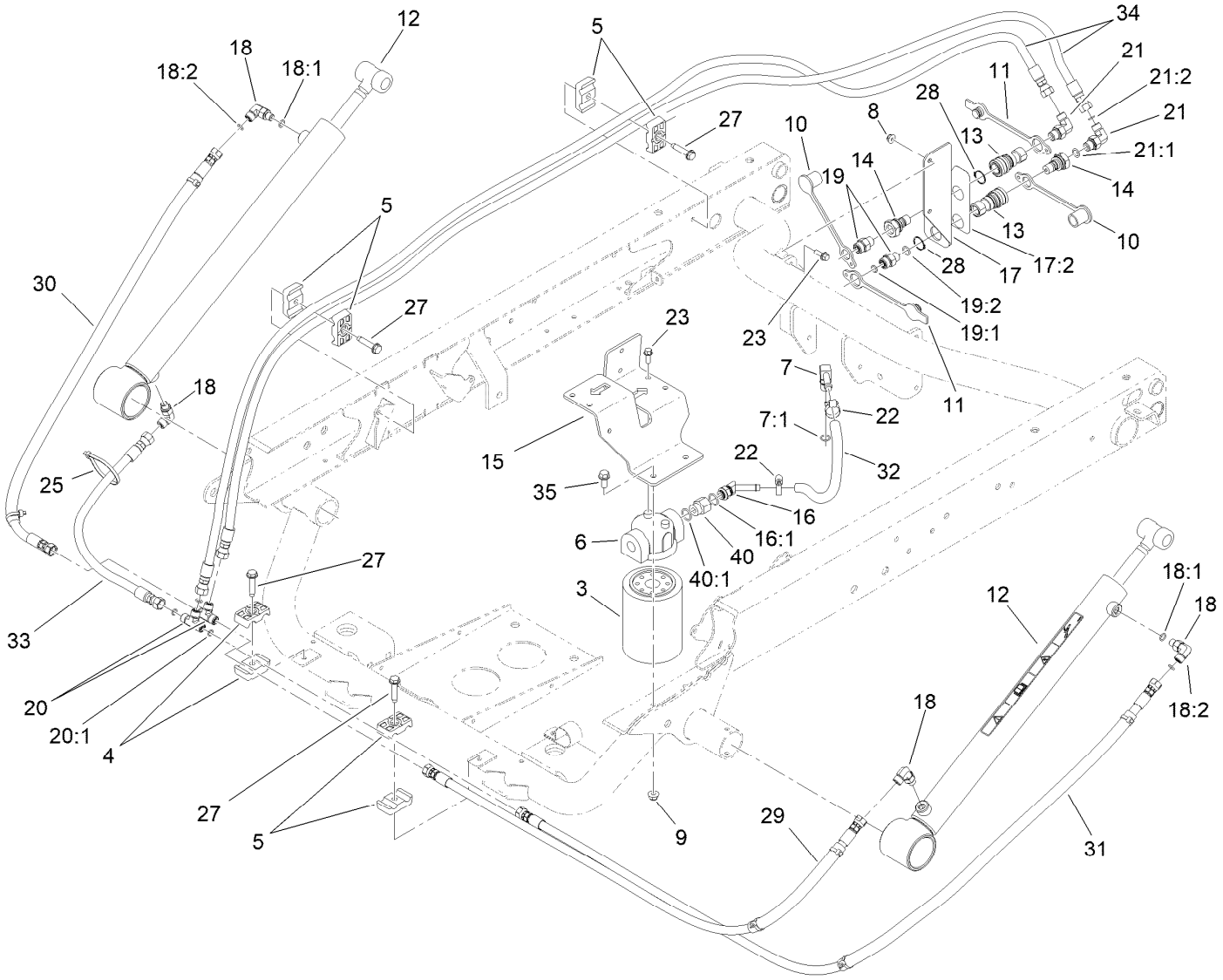


# Hydraulic Lift Cylinder Assembly

| Ref. | Part Number | Qty. | Description |
|---|---|---|---|
| 3 | 54-0110 | 1 | Filter-Oil, Transmission |
| 4 | 56-7971 | 2 | Clamp-Tube |
| 5 | 56-7976 | 6 | Clamp-Tube |
| 6 | 87-8780 | 1 | Head-Filter |
| 7 | 100-4887 | 1 | Fitting-Elbow, 90 |
| 7:1 | 237-42 | 1 | O-Ring |
| 8 | 104-7201 | 2 | Nut-HF, NI |
| 9 | 104-8300 | 2 | Nut-HF, NI |
| 10 | 106-7881 | 2 | Cap-Dust, HYD |
| 11 | 106-7882 | 2 | Plug-Dust, HYD |
| 12 | 133-0620 | 2 | HYD Cylinder ASM |
| 13 | 106-7968 | 2 | Coupler-Quick, Female |
| 14 | 106-7969 | 2 | Coupler-Quick, Male |
| 15 | 115-2168-0P | 1 | Bracket-Mount-Filter |
| 16 | 103-1807 | 1 | Fitting-Barbed, 45 DEG |
| 16:1 | 237-42 | 1 | O-Ring |
| 17 | 139-4530 | 1 | Coupler Bracket ASM |
| 17:2 | 115-7723 | 1 | Decal-Disconnect, Quick |
| 18 | 340-132 | 4 | Fitting-Elbow, 90 DEG |
| 18:1 | 237-78 | 1 | O-Ring |
| 18:2 | 237-21 | 1 | O-Ring |

| Ref. | Part Number | Qty. | Description |
|---|---|---|---|
| 19 | 340-2 | 2 | Fitting-Straight |
| 19:1 | 237-22 | 1 | O-Ring |
| 19:2 | 237-42 | 1 | O-Ring |
| 20 | 340-21 | 2 | Fitting |
| 20:1 | 237-21 | 3 | O-Ring |
| 21 | 340-82 | 2 | Fitting-Elbow, 90 DEG |
| 21:1 | 237-42 | 1 | O-Ring |
| 21:2 | 237-21 | 1 | O-Ring |
| 22 | 2412-36 | 2 | Clamp-Hose |
| 23 | 3234-4 | 4 | Screw-HHF |
| 25 | 3290-379 | 3 | Tie-Cable |
| 27 | 32144-57 | 4 | Screw |
| 28 | 32151-83 | 2 | Ring-Snap |
| 29 | 147-7993 | 1 | Hose ASM, HYD HP |
| 30 | 147-7996 | 1 | Hose ASM, HYD HP |
| 31 | 147-7994 | 1 | Hose ASM, HYD HP |
| 32 | 115-2228 | 1 | Hose-HYD |
| 33 | 147-7995 | 1 | Hose ASM, HYD HP |
| 34 | 147-7997 | 2 | Hose ASM, HYD HP |
| 35 | 3234-5 | 2 | Screw-HHF |

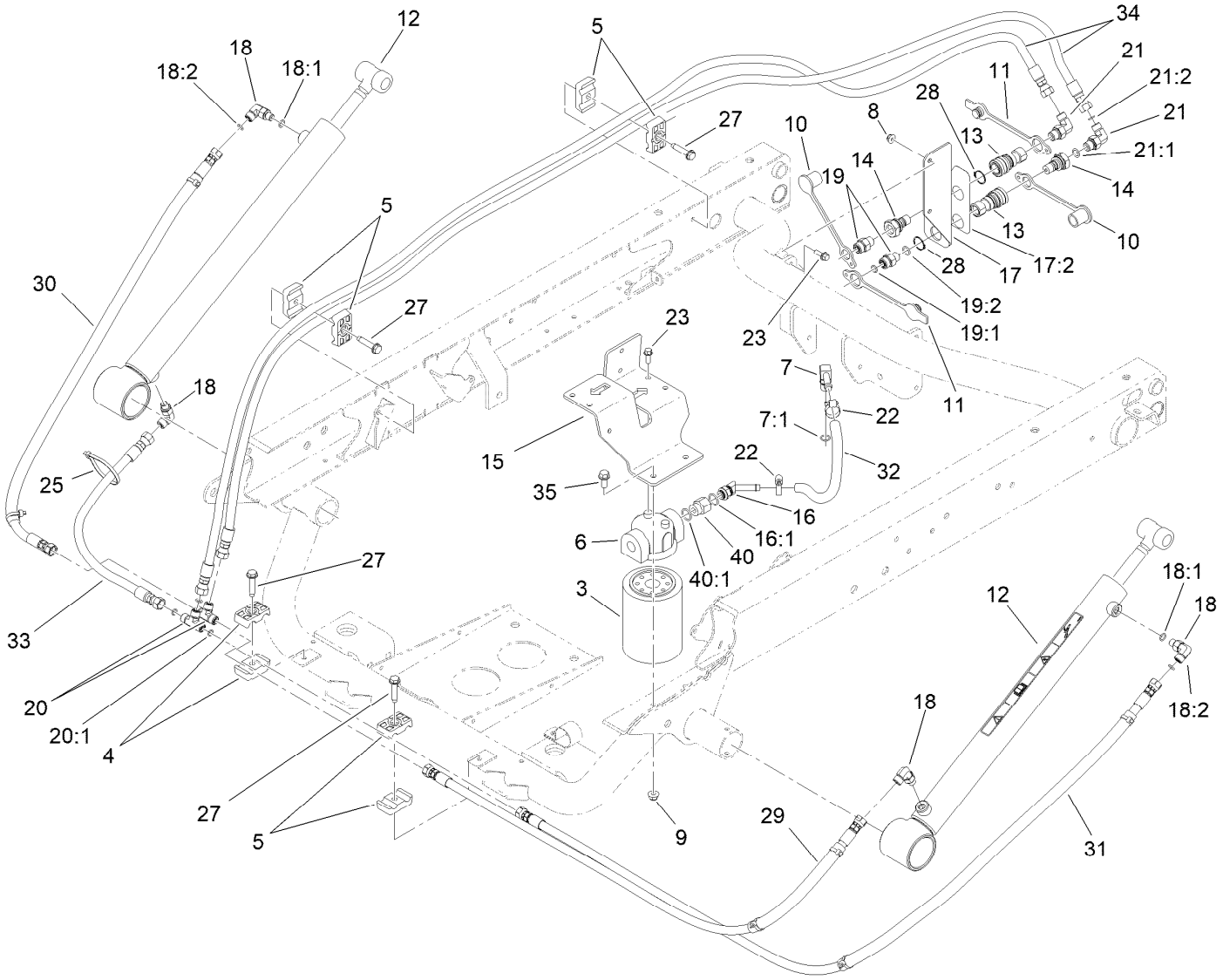


# Hydraulic Lift Cylinder Assembly (continued)

| *Ref.* | *Part Number* | *Qty.* | *Description* |
|---|---|---|---|
| 40 | 353-397 | 1 | Reducer-Adapter |
| 40:1 | 237-79 | 1 | O-Ring |

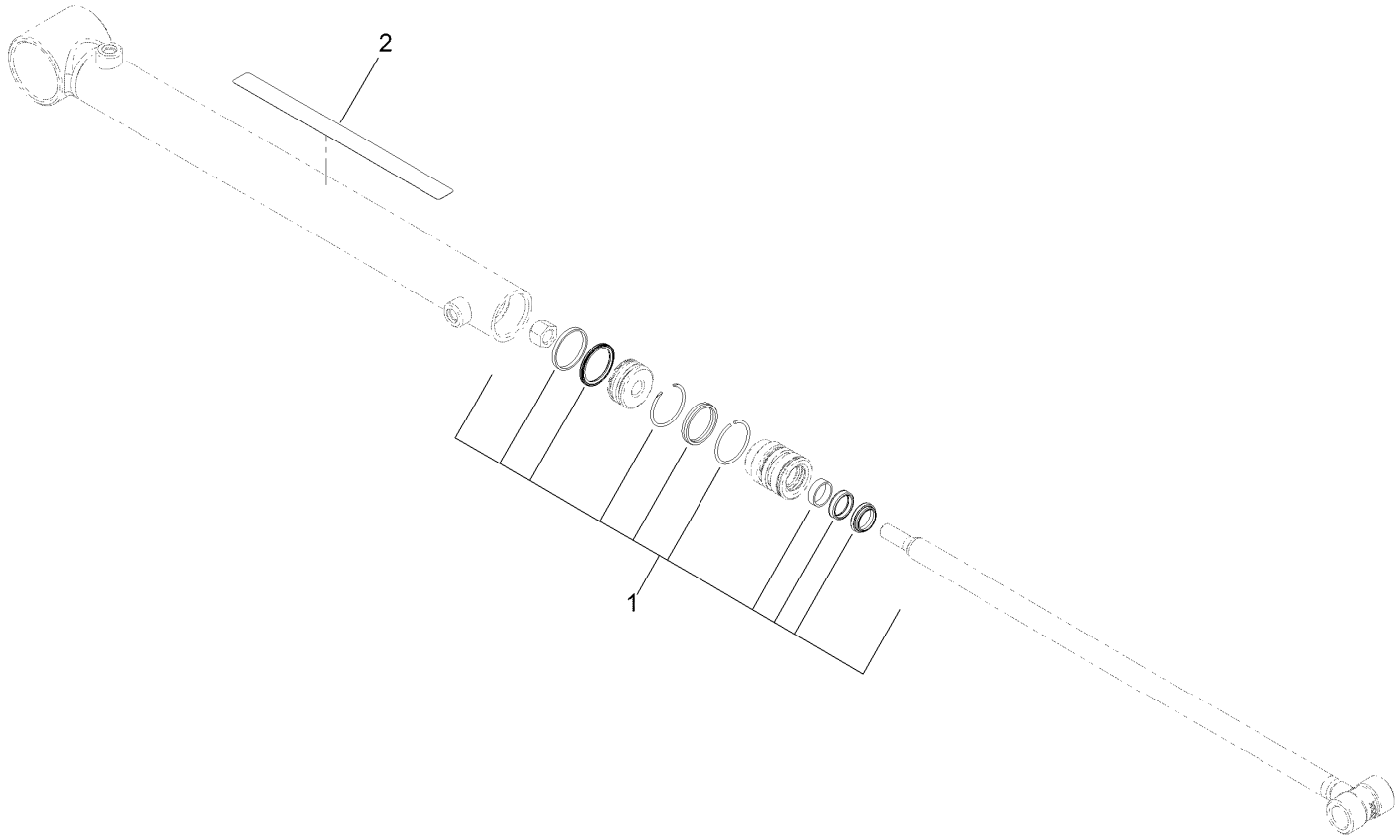


# Hydraulic Cylinder Assembly No. 133-0620

| *Ref.* | *Part Number* | *Qty.* | *Description* |
|---|---|---|---|
| 1 | 133-0618 | 1 | Cylinder Seal Kit |
| 2 | 93-9852 | 1 | Decal-Warning |

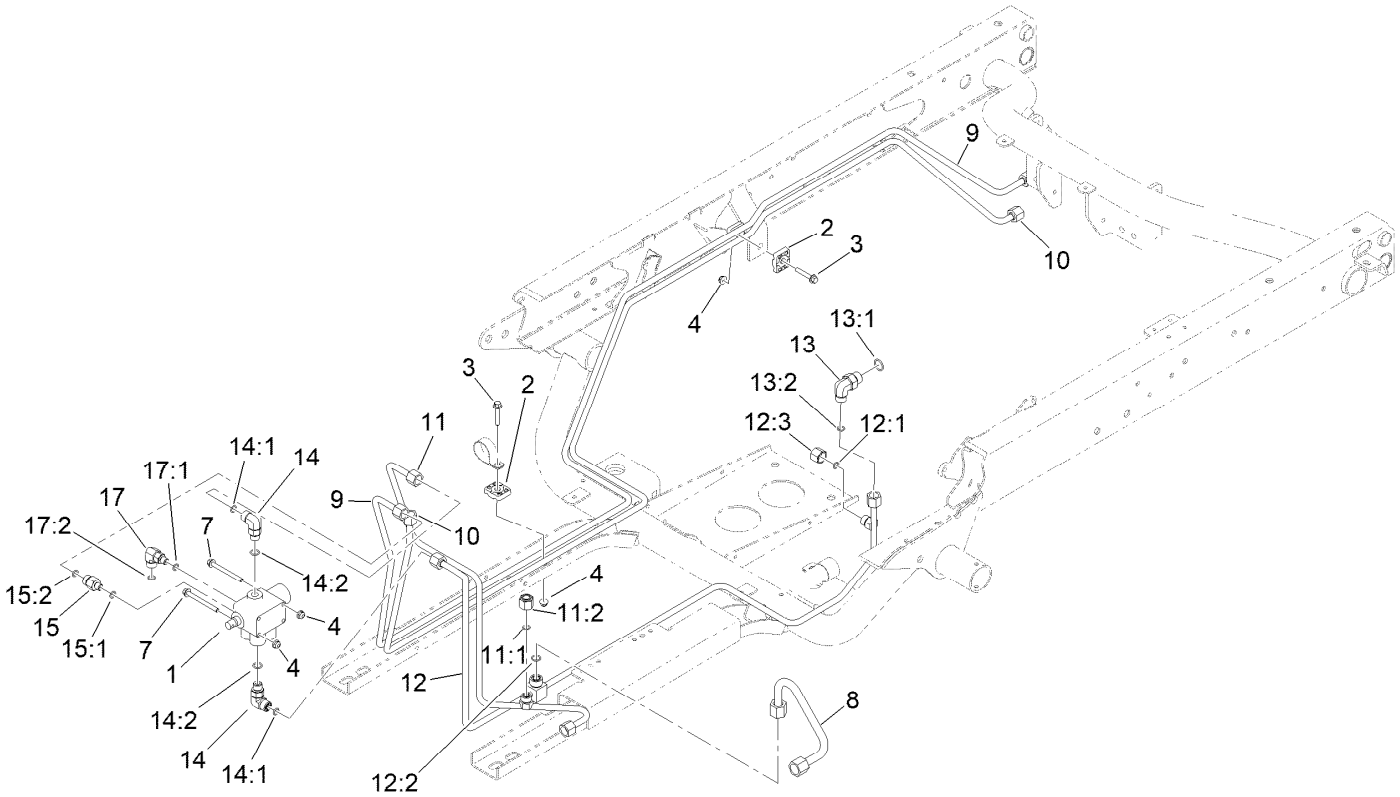


# Lift Valve Assembly

| Ref. | Part Number | Qty. | Description |
|---|---|---|---|
| 1 | 43-1950 | 1 | HYD Control Valve ASM |
| 2 | 56-7973 | 4 | Clamp-Tube |
| 3 | 94-5781 | 2 | Screw-HHF |
| 4 | 104-7201 | 4 | Nut-HF, NI |
| 7 | 114-8410 | 2 | Screw-HHF |
| 8 | 147-2802 | 1 | Hydraulic Tube ASM |
| 9 | 115-2217 | 1 | Tube-HYD |
| 10 | 115-2218 | 1 | Tube-HYD |
| 11 | 127-8604 | 1 | Tube-HYD |
| 11:1 | 237-22 | 1 | O-Ring |
| 11:2 | 340-117 | 1 | Cap |
| 12 | 147-2804 | 1 | Tube-HYD |
| 12:1 | 237-22 | 1 | O-Ring |
| 12:2 | 237-30 | 1 | O-Ring |

| Ref. | Part Number | Qty. | Description |
|---|---|---|---|
| 12:3 | 340-117 | 1 | Cap |
| 13 | 340-18 | 1 | Fitting-HYD, 90 DEG |
| 13:1 | 237-79 | 1 | O-Ring |
| 13:2 | 237-22 | 1 | O-Ring |
| 14 | 340-77 | 2 | Fitting-Elbow, 90 DEG |
| 14:1 | 237-22 | 1 | O-Ring |
| 14:2 | 237-42 | 1 | O-Ring |
| 15 | 340-88 | 1 | Fitting-Straight |
| 15:1 | 237-22 | 1 | O-Ring |
| 15:2 | 237-78 | 1 | O-Ring |
| 17 | 340-97 | 1 | Fitting-Elbow, 90 DEG |
| 17:1 | 237-22 | 1 | O-Ring |
| 17:2 | 237-78 | 1 | O-Ring |

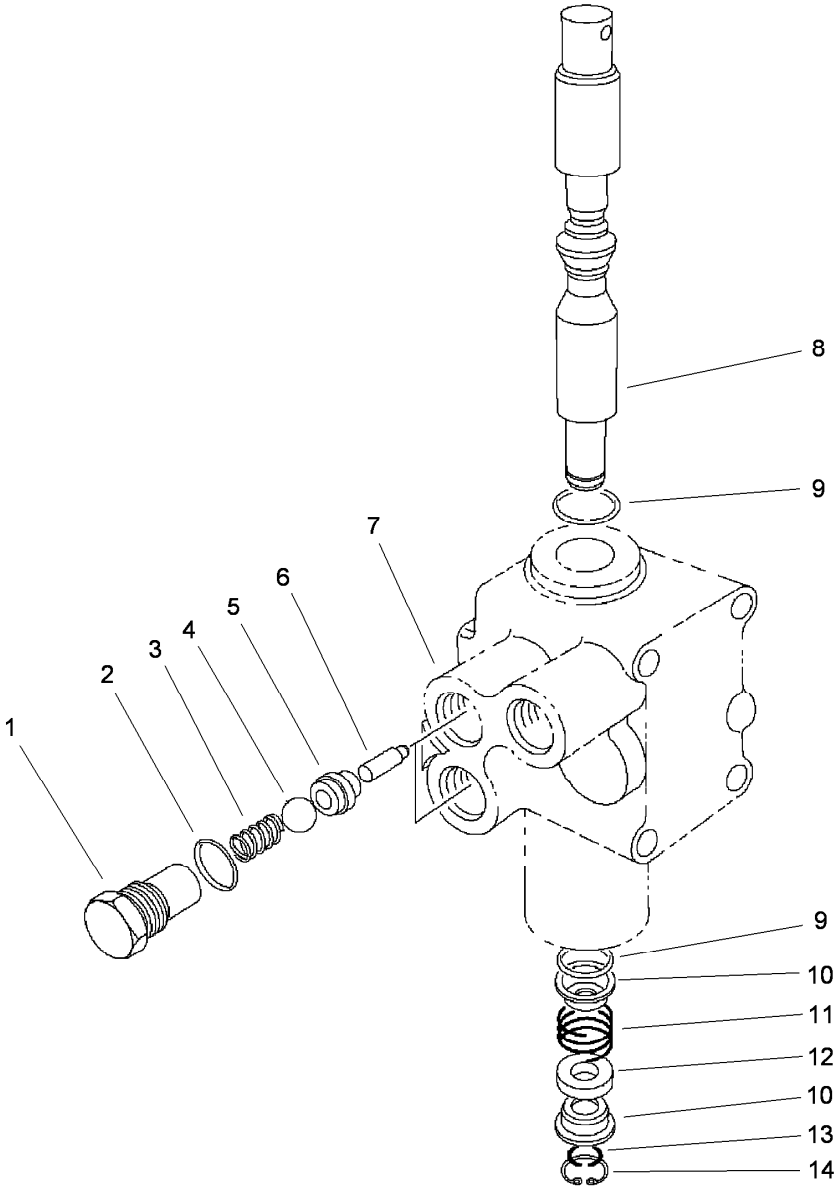


# Control Valve Assembly No. 43-1950

| Ref. | Part Number | Qty. | Description |
|---|---|---|---|
| 1 | 22-8330 | 2 | Plug |
| 2 | 237-42 | 2 | O-Ring |
| 3 | 22-8340 | 2 | Spring |
| 4 | 22-8350 | 2 | Ball |
| 5 | 22-8370 | 2 | Seat-Valve |
| 6 | 22-8360 | 2 | Pin |
| 7 | | 1 | Body ● |
| 8 | 22-8420 | 1 | Spool |
| 9 | 22-8500 | 2 | O-Ring |
| 10 | 22-8380 | 2 | Retainer |
| 11 | 22-8410 | 1 | Spring |
| 12 | 23-3030 | 1 | Spacer |
| 13 | 22-8480 | 1 | Ring-Snap |
| 14 | 22-8490 | 1 | Ring-Snap |

● Not serviced separately

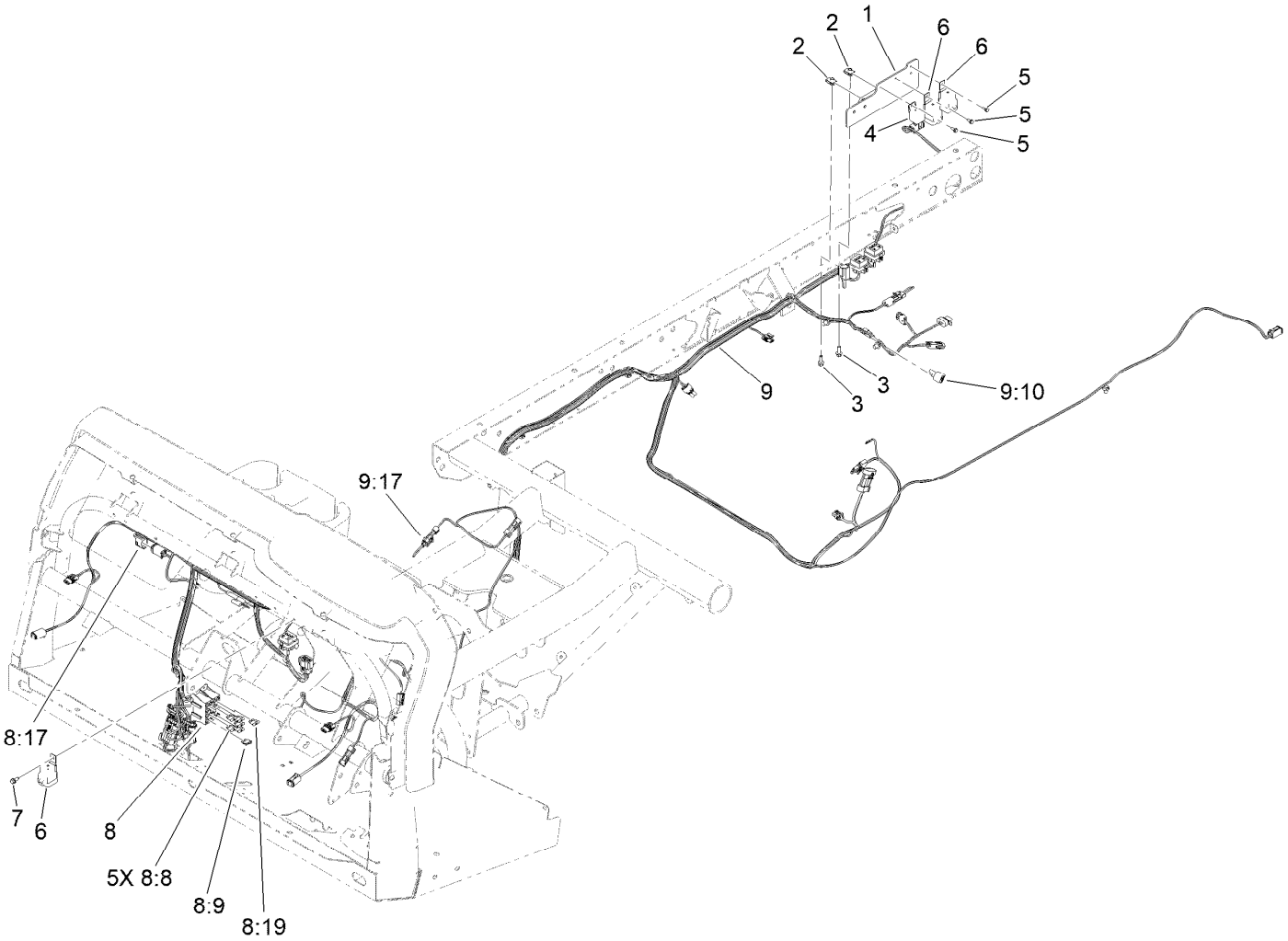


# Front and Rear Wire Harness Assembly

| Ref. | Part Number | Qty. | Description |
|---|---|---|---|
| 1 | 132-6714-0P | 1 | Bracket-Mount, Filter |
| 2 | 107069 | 2 | Clip |
| 3 | 3234-4 | 2 | Screw-HHF |
| 4 | 99-7435 | 1 | Relay |
| 5 | 32144-112 | 3 | Screw-HWH |
| 6 | 99-7430 | 3 | Relay-Mini |
| 7 | 32144-10 | 1 | Screw-HWH |
| 8 | 122-2362 | 1 | Harness-Wire, HDX, Air Cooled, Front |
| 8:8 | 218-578 | 5 | Fuse-Blade, 10 Amp |
| 8:9 | 109355 | 1 | Fuse-Blade, 15 Amp |
| 8:17 | 32180-156 | 1 | Cap-Plug, 6 Way |
| 8:19 | 109101 | 1 | Fuse-Blade, 20 Amp |
| 9 | 122-2363 | 1 | Harness-Wire, HDX, Air Cooled, Rear |
| 9:10 | 100-4918 | 1 | Diode |
| 9:17 | 119-7787 | 1 | Harness-Wire, Vertical Lift Shunt |

# Attachments and Accessories

## For 07369 Workman HD Utility Vehicle with Bed

| Product Name | Model/Part |
|---|---|
| Pro Sweep Turf Sweeper | 07068 |
| Bed Liner | 07331 |
| Canopy | 07372 |
| Windshield | 07373 |
| 4 Post Roll-Over Protection System | 07378 |
| Cab Kit | 07392 |
| Door Kit with Sliding Window | 07393 |
| Rear PTO Kit | 07419 |
| Hand Throttle Kit | 07420 |
| Aggressive Tire Kit | 07422 |
| Synthetic Turf Conditioner, Tow-Behind Accessory | 08791 |
| Hitch Pin | 100-4523 |
| Jack Stand | 105-9482-03 |
| Backup Alarm Kit | 107-8037 |
| Premium ATF (Drum) | 108-1185 |
| Premium ATF (Pail) | 108-1186 |
| Premium All Purpose Grease (Tube) | 108-1190 |
| Remote Hydraulics Manifold Kit | 110-2626 |
| Wheel-12in x 8.0in | 114-8260 |
| Wireless Hourmeter | 115-4754 |
| Horn Kit | 115-7825 |
| Side Mirror Kit | 115-7849 |
| External Antenna Kit, Wireless Hourmeter System | 115-9524 |
| Base Station Kit, Wireless Hourmeter System | 115-9542 |
| Repeater Kit, Wireless Hourmeter System | 115-9543 |
| Worklight Kit | 117-4827 |
| Remote Hydraulic Float Kit | 117-4828 |
| Receiver Hitch Kit | 117-4831 |
| Canopy for Four-Post Roll-Over Protection System Kit | 119-9457 |
| Trailer Brake Kit | 125-0123 |
| Tailpipe Extension Kit | 127-7397 |
| Backup Alarm Kit | 127-8729 |
| 1/3 Area Cover Kit | 127-8739 |
| Exterior Mirror Kit | 130-5448 |
| Interior Mirror Kit | 130-5449 |
| Beacon Kit | 130-5484 |
| Work Light Kit | 130-5485 |
| Windshield Washer Fluid Kit, 2015 and after Workman MD/HD Series Utility Vehicle | 130-5615 |
| Hitch ASM | 131-3462 |
| Small Seat Cover | 131-6690 |
| Tire/Wheel ASM (24 X 12-12) | 131-8428 |
| Tire/Wheel ASM (20 X 9-12) | 131-8430 |
| Tire/Wheel ASM (24 X 13-12) | 131-8432 |
| Tire-Rear | 131-8433 |
| Power Point Kit | 131-8550 |
| LED Worklight Kit | 133-0554 |

# Attachments and Accessories (continued)

ROPS Beacon Kit ..... 133-0609
Bracket-light, Canopy ..... 133-0627
Door Mount Mirror Kit ..... 136-1997
Wheel/Tire ASM, A502 (20X9-12)Semi-Aggressive ..... 136-6308
Wheel/Tire ASM, K502 (24X12-12)Semi-Aggressive ..... 136-6309
Wheel/Tire ASM, A404 (20X9-12)Smooth ..... 136-6334
Wheel/Tire ASM, A404 (24X12-12)Smooth ..... 136-6335
Brake and Signal LED Light Kit, Serial number 410500000 and After Workman HD Utility Vehicle ..... 145-2296
LED Trailer Signal Kit ..... 147-2791
LED Homologation Lamp Kit ..... 147-2798
Multi Pro WM Turf Sprayer ..... 41240
Topdresser 1800 ..... 44225
Topdresser 2500 ..... 44507
Pro Force Debris Blower ..... 44552
Pro Force Debris Blower ..... 44553
Pro Force Debris Blower ..... 44554
ProPass 200 Top Dresser with Twin Spinner ..... 44701
ProPass 200 Top Dresser with Twin Spinner and Wireless Control ..... 44751
12 Inch Rear Wheel Weights ..... 81115
Fuse Block ..... 92-2641
PTO Over Running Clutch Kit ..... 92-2655
Topdresser 1800 Lift Kit ..... 92-4452
Spark Arrestor Screen ..... 94-8157
Tire-Rear, Industrial ..... 99-1091

**Notes:**

**Notes:**

TORO®

Count on it.