Form No. 3329–500

36/42” Rear Discharge Mower Conversion Kit
42/48” Side Discharge Mower Conversion Kit

XT Series Garden Tractors

Part No. 106–8252
Part No. 106–8253

Installation Instructions

Note: Determine the left and right sides of the machine from the normal operating position.

Loose Parts

Note: Use the chart below to identify parts used for assembly.

Description	Qty.	Use
Mower bracket–L.H.	1	Installing the new mower suspension
Mower bracket–R.H.	1	
Carriage bolt–3/8 x 1 inch	4	
Lock nut–3/8	4	
Carriage bolt–7/16 x 1–1/2 inch	2	
Spacer–11/16 inch long	2	
Lock nut–7/16	2	
Draft bar assembly–L.H.	1	
Draft bar assembly–R.H.	1	
Hitch assembly	1	
Washer–5/8 x 1 inch	4	
Cotter pin–1/8 x 1–1/2 inch	2	
Bolt–3/8 x 1–1/4 inch	4	
Spacer–5/16 inch long	4	
Flange nut	4	
Adjusting rod	1	
Lift trunnion	1	
Lock nut–3/8 inch	1	
Washer–3/8 x 13/16 inch	1	
Washer–3/8 x 13/16 inch (Use on Side Discharge Mowers only)	1	
Cotter pin–3/32 x 1–3/4 inch	2	
Pulley box assembly	1	Installing the pulley box to tractor
PTO belt–46 in. length	1	Mount to tractor and pulley box
Drive belt–69 in. length	1	Use with 42” and 48” Side Discharge Mowers
Drive belt–63.88 in. length	1	Use with 42” Rear Discharge Mower
Drive belt–62.75 in. length	1	Use with 36” Rear Discharge Mower

© 2003 by The Toro Company
8111 Lyndale Avenue South
Bloomington, MN 55420-1196

All Rights Reserved
Printed in the USA

Preliminary Preparation

1. Park the tractor and mower on a level surface, disengage the blade control (PTO), set the parking brake, stop the engine, and remove the ignition key.
2. Lower the mower to its lowest position and remove the mower from the tractor. Refer to the mower *Operator's Manual* for removal instructions.
3. Thoroughly clean the mower. All debris must be removed to ensure that parts will fit the mower properly.

Removing the Old Mower Suspension

1. Remove the cotter pin securing the adjusting rod trunnion to the mower bracket (Fig. 1).

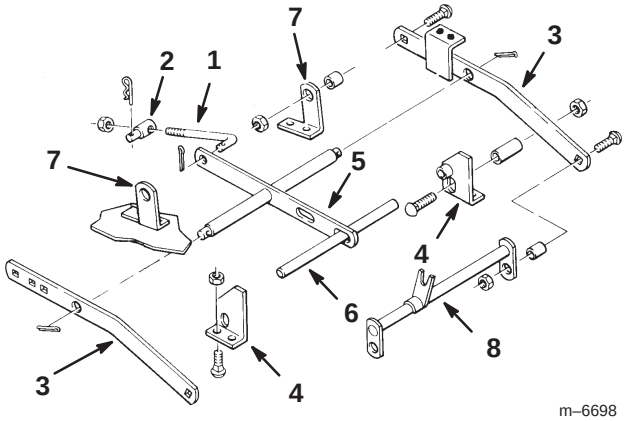

Figure 1

1. Adjusting rod
2. Adjusting rod trunnion
3. Draft bar
4. Front mower brackets
5. Leveler bar
6. Leveler shaft
7. Rear mower brackets
8. Hitch assembly

2. Remove the carriage bolts, spacers and nuts securing the draft bars to the rear mower brackets (Fig. 1).
3. Remove the cotter pins securing the draft bars to the leveler bar (Fig. 1).
4. Remove the carriage bolts and nuts securing the front mower brackets to the mower (Fig. 1).
5. Remove and retain the leveler shaft and the leveler bar. Discard all other components (Fig. 1). Do not remove the rear mower brackets from the mower.

Installing the New Mower Suspension

1. Make sure the leveler shaft is positioned through the hole(s) in the leveler bar(s) (Fig. 2).

Note: Some side discharge mowers may be equipped with one, two or three leveler bars.

2. Insert a new right and left front mower bracket onto the appropriate end of the leveler shaft. Position the brackets as shown in figure 2.

Note: On side discharge mowers, the mounting flanges on the mower bracket face inward.

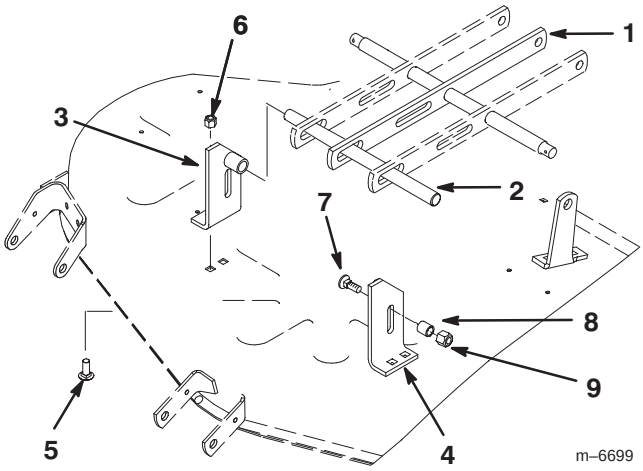

Figure 2

1. Leveler bar
2. Leveler shaft
3. R.H. mower bracket
4. L.H. mower bracket
5. Carriage bolt (3/8 x 1 inch)
6. Lock nut (3/8 inch)
7. Carriage bolt (7/16 x 1–1/2 inch
8. Spacer (11/1‘6 inch long)
9. Lock nut (7/16 inch)

3. Using the old bracket mounting holes, mount each mower bracket to the mower with 2 carriage bolts (3/8 x 1 inch) and locknuts (3/8 inch) (Fig. 2).

Note: The carriage bolt heads are to be positioned under the mower.

4. Loosely mount a carriage bolt (7/16 x 1–1/2 inch), spacer (11/16 inch long) and flange lock nut (7/16 inch) to each front mower bracket. Position the components as shown in figure 2.

5. Loosely mount a new draft bar assembly to each end of the hitch assembly with a capscrew (3/8 x 1–1/4 inch), spacer (5/16 inch long) and lock nut (3/8 inch) (Fig. 3). Make sure the draft bar bumpers are positioned to the outside.

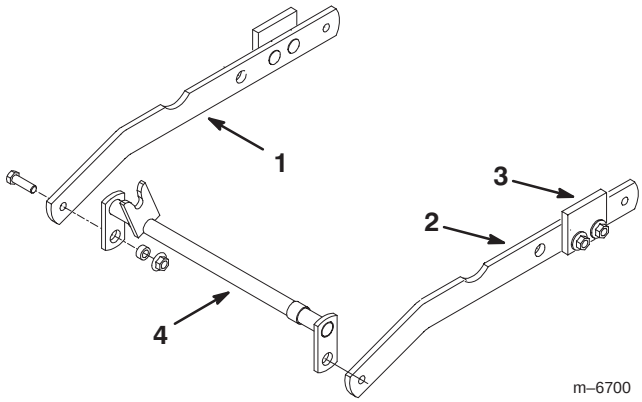

Figure 3

1. R.H. draft bar assembly
2. L.H. draft bar assembly
3. Bumper
4. Hitch assembly

6. Assemble the draft bars onto the leveler bar (Fig. 4) and secure each end with a washer (5/8 x 1 inch) and cotter pin.

Note: The draft bars will rest on the front mower bracket spacers and positioned to the outside of the rear mower brackets.

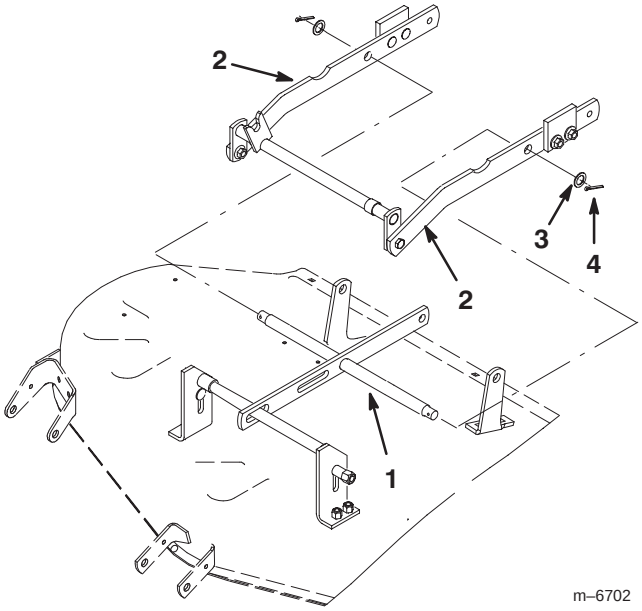

Figure 4

1. Leveler bar
2. Draft bar
3. Washer
4. Cotter pin

7. Secure each draft bar to the rear mower brackets with a capscrew (3/8 x 1–1/4 inch), spacer (5/16 inch long) and flange nut (3/8 inch) (Fig. 5). Position the fasteners as shown in figure 5.

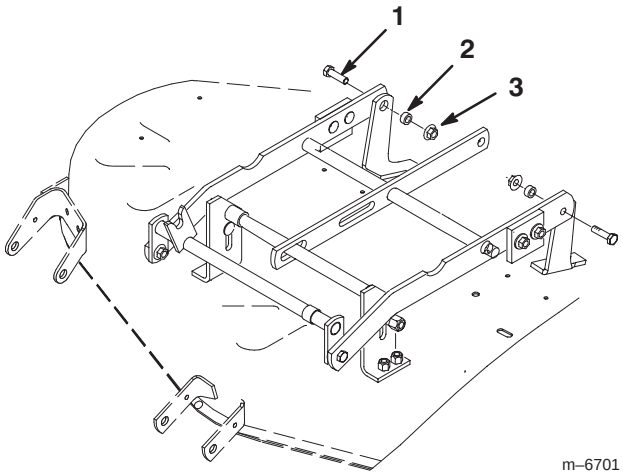

Figure 5

1. Capscrew
2. Spacer
3. Flange nut (3/8 inch)

8. Assemble the lift trunnion and the lock nut (3/8 inch) onto the adjusting rod (Fig. 6).

9. Hook the adjusting rod into the leveler bar and secure with a washer and cotter pin (Fig. 6).

10. Insert the lift trunnion into the mower bracket and secure it with a washer (3/8 x 13/16 inch) (side discharge mowers only) and cotter pin (Fig. 6).

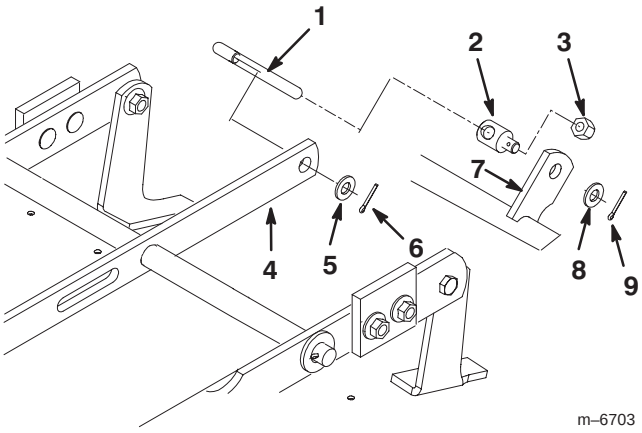

Figure 6

1. Adjusting rod
2. Lift trunnion
3. Lock nut (3/8 inch)
4. Leveler bar
5. Washer
6. Cotter pin
7. Mower bracket
8. Washer (Side discharge mowers only)
9. Cotter pin

Installing the Mower

1. Disengage the PTO and set the parking brake.
2. Stop the engine, remove the key, and wait for all moving parts to stop before leaving the operating position.
3. Position the mower on the right side of the tractor.
4. Turn the front wheels fully to the left and raise attachment lift lever or electric lift all the way up. Refer to the tractor *Operator's Manual*.
5. Open the mid-mount hitch by pulling out the J–pin and moving the lock handle rearward (Fig. 7).

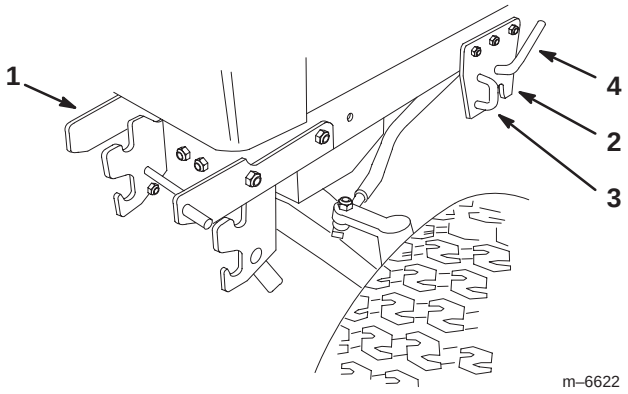

Figure 7

1. Front hitch
2. Mid-mount hitch
3. J–pin
4. Lock handle

6. Slide the mower under the tractor from the right side and slide the attachment lift between the center and left side level bar (Fig. 8).

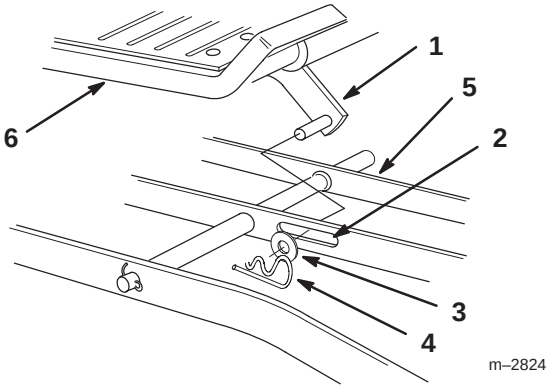

Figure 8

1. Attachment lift
2. Slot in center level bar
3. Washer
4. Hairpin cotter pin
5. Left level bar
6. Right footrest

7. Straighten the front wheels and lower the attachment lift lever or electric lift to the mounting position; refer to the tractor *Operator's Manual*.
8. Place the attachment lift pin into the slot in the center lever bar and secure it with a washer (3/4 inch) and a hairpin cotter (Fig. 8).
9. Rotate the front mounting shaft so the fork faces straight up and aligned so the spacers are between the mid-mount hitch plates (Fig. 9).

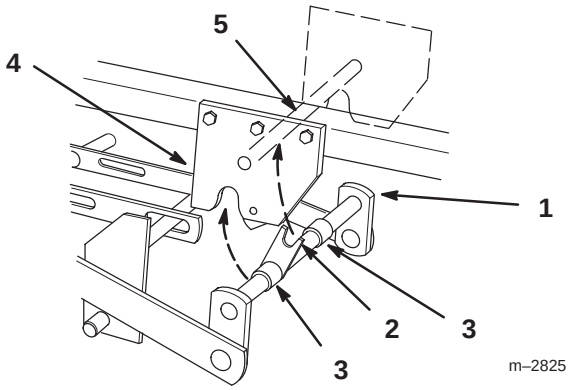

Figure 9

1. Front mounting shaft
2. Fork
3. Spacer
4. Mid-mount hitch plate
5. Hitch rod

10. Lift the mower with the attachment lift lever or electric lift and guide the fork to capture the hitch rod (Fig. 9).
11. Close the mid-mount hitch lock handle by rotating it forward (Fig. 10).

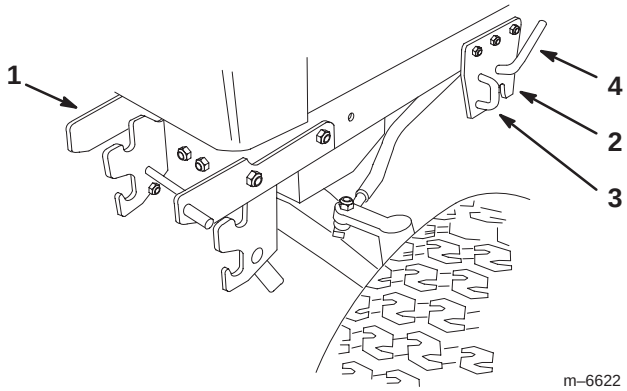

Figure 10

1. Front hitch
2. Mid-mount hitch
3. J–pin
4. Lock handle

Installing the Front Pulley Box

Install the front pulley box if it is not already installed.

1. Rotate the knobs to adjust the idler pulleys so there is a 1/4 inch (7 mm) clearance between the idler arms and the mounting pins (Fig. 11).

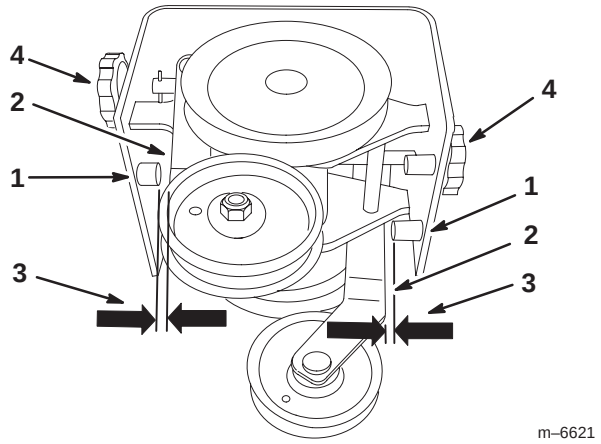

Figure 11

1. Mounting Pins
2. Idler arm
3. 1/4 inch (7 mm) clearance
4. Knob

2. Make sure the front latches are open and then slide the pulley box into the front hitch.

Note: Make sure the pulley box engages and closes the latches.

3. Adjust both idler pulleys until they are totally to the outside by turning the knobs.

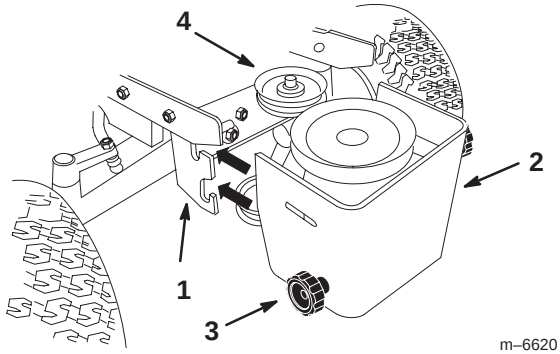

Figure 12

1. Front hitch
2. Pulley box
3. Knob
4. Idler pulley

Installing the PTO Belt

If desired, remove the hood for better access to the upper pulleys in the pulley box. Refer to the tractor *Operator's Manual*.

1. Install the PTO belt onto the clutch pulley (Fig. 13).

2. Install the PTO belt onto the upper pulley and upper idler pulley in the pulley box (Fig. 13).

3. Turn the left (upper) knob on the front pulley box to tighten the PTO drive belt (Fig. 13). There needs to be a 1/2 inch (13 mm) deflection in the belt.

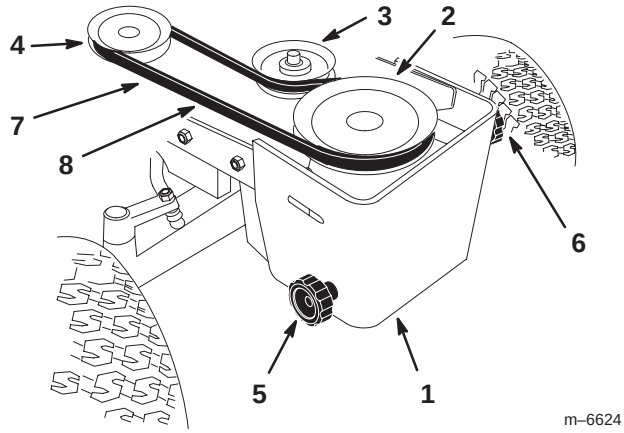

Figure 13

1. Pulley box
2. Upper pulley
3. Upper Idler pulley
4. PTO clutch pulley
5. Right knob
6. Left knob
7. PTO belt
8. Check 1/2 inch deflection here

Installing the Mower Drive Belt

1. Adjust the mower height–of–cut to the middle position; refer to the tractor *Operator's Manual*.

2. Install the mower drive belt onto the mower center pulley (Fig. 14). Ensure that it is on the upper center pulley.

3. Install the mower drive belt onto the lower pulley and the lower idler pulley in the pulley box (Fig. 14).

4. Turn the right (lower) knob on the front pulley box to tighten the mower drive belt (Fig. 13). There needs to be a 1/2 inch (13 mm) deflection in the belt.

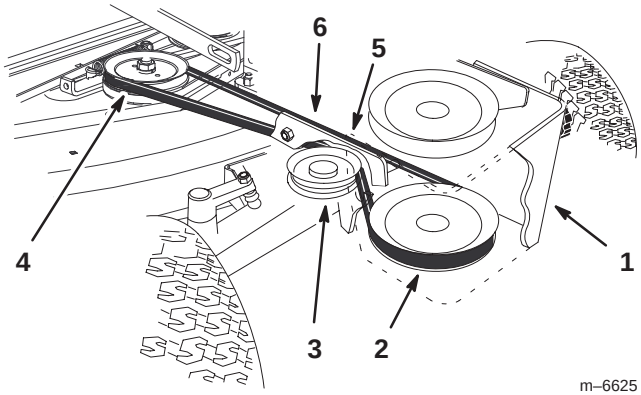

Figure 14

1. Pulley box
2. Lower pulley
3. Lower Idler pulley
4. Mower center pulley
5. Mower drive belt
6. Check 1/2 inch deflection here

Checking the Front-to-Rear Blade Slope

Check the front-to-rear blade slope any time you install the mower.

1. Check the tire pressure on the tractor. Refer to the tractor *Operator's Manual*.
2. Position one blade front-to-rear (Fig. 15). Measure at **C** and either **D** location (Fig. 15) from a level surface to the cutting edge of the blade tips (Fig. 16).
3. The mower blade should be **1/8–1/4 inch (4–7 mm) lower in front at *C* than in the rear at *D*.** Rotate the blades and repeat for the other blades.
4. If it is not correct, proceed to Changing the mower Front–to–Rear Pitch.

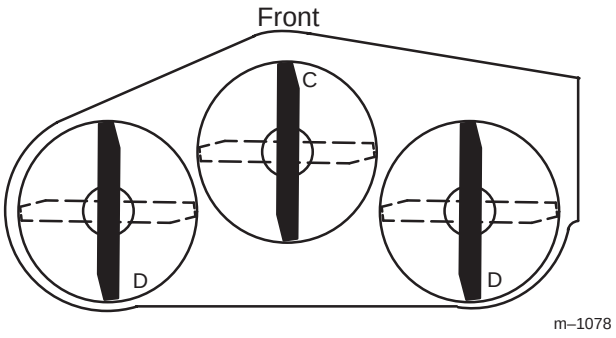

Figure 15

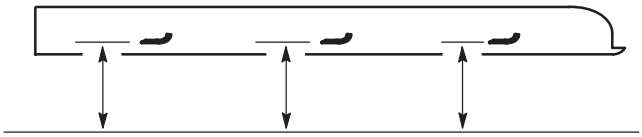

MEASURE FROM CUTTING EDGE TO A LEVEL SURFACE

m–2539

Figure 16

Changing the Front-to-Rear Blade Slope

1. To adjust the front-to rear blade slope turn the locknut on rear adjustable link (Fig. 17).

Note: To raise the front of the mower, turn locknut clockwise, to lower front turn counterclockwise.

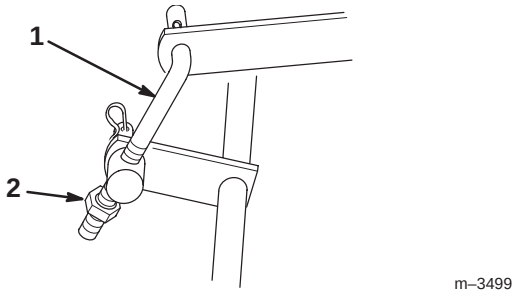

Figure 17

1. Adjustable link
2. Locknut

Transport Height Adjustment

Transport height is adjusted to stabilize the mower in the up, locked position.

1. Raise the mower to the highest height–of–cut and check if the transport level stops contact the bottom of the draft bars (Fig. 18).
2. If needed, loosen and adjust the transport level stops so they just contact the bottom of the draft bars (Fig. 18).

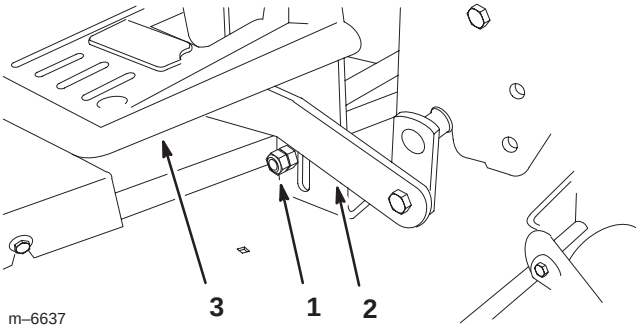

Figure 18

1. Transport level stop—right side shown
2. Draft bar
3. Right side footrest

3. Raise the attachment lift lever or electric lift all the way up. Check if bumpers, on rear of mower draft bars contact under footrests (Fig. 19).

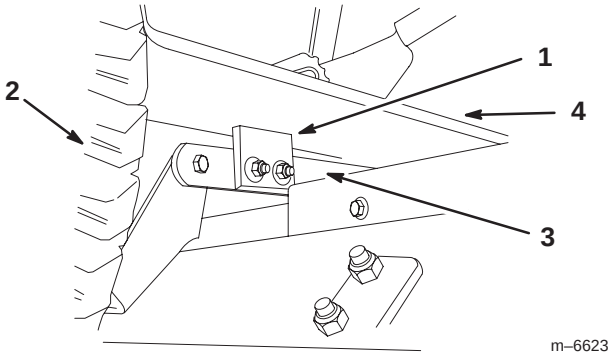

Figure 19

1. Bumper
2. Right rear tire
3. Draft bar
4. Footrest

4. If the bumpers do not contact footrests, adjust the lift chain by turning the nut on the eyebolt in the rear hole of tractor lift (Fig. 20). Turn the nut clockwise to raise the mower or counterclockwise to lower it.

5. If one of the bumpers does not contact the footrest, adjust the appropriate transport level stop (Fig. 18).

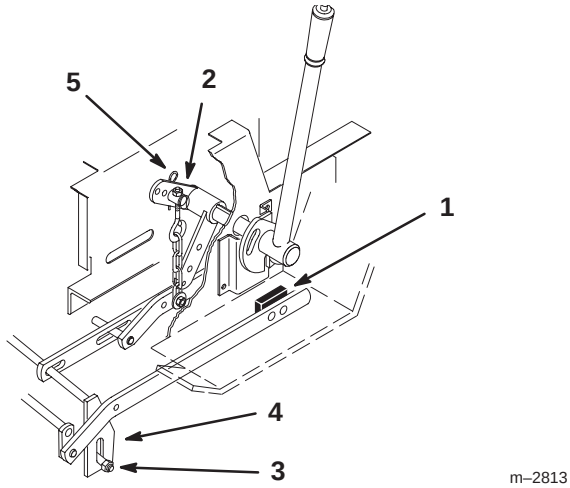

Figure 20

1. Bumper
2. Trunnion
3. Leveling bolts
4. Transport level stop
5. Hairpin cotter

Replacing the Power Take Off (PTO) Belt

Warning

Components around engine will be hot if the machine has been running. Touching hot components can cause burns.

- **Do not touch the engine components or the muffler when hot.**
- **Allow the engine to cool before performing maintenance.**

Note: If desired, remove the hood for better access to the upper pulleys in the pulley box. Refer to the tractor *Operator's Manual*.

1. Turn the left (upper) knob on the front pulley box to loosen the PTO drive belt (Fig. 21).

2. Remove the PTO belt from the clutch pulley (Fig. 21).

3. Remove the PTO belt from the upper pulley and upper idler pulley in the pulley box (Fig. 21).

4. Install the PTO new belt onto the clutch pulley (Fig. 21).

5. Install the PTO belt onto the upper pulley and upper idler pulley in the pulley box (Fig. 21).

6. Turn the left (upper) knob on the front pulley box to tighten the PTO drive belt (Fig. 21). There needs to be a 1/2 inch (13 mm) deflection in the belt.

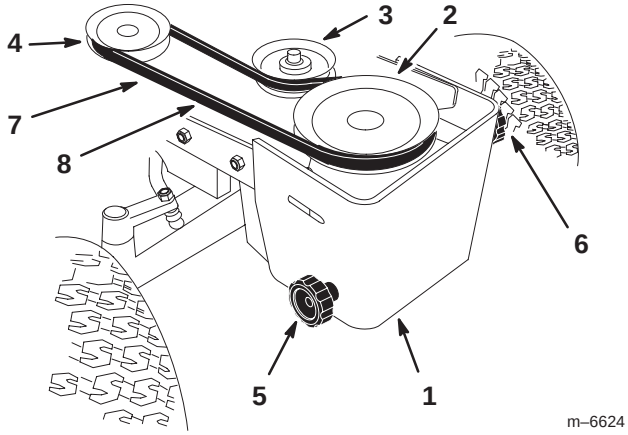

Figure 21

1. Pulley box
2. Upper pulley
3. Upper Idler pulley
4. PTO clutch pulley
5. Right (lower) knob
6. Left (upper) knob
7. PTO belt
8. Check 1/2 inch deflection here

Replacing the Mower Drive Belt

1. Turn the right (lower) knob on the front pulley box to loosen the mower drive belt (Fig. 13).
2. Remove the mower drive belt from the mower center pulley (Fig. 14).
3. Remove the mower drive belt from the lower pulley and the lower idler pulley in the pulley box (Fig. 14).
4. Install the new mower drive belt onto the mower center pulley (Fig. 14). Ensure that it is on the upper center pulley.
5. Install the mower drive belt onto the lower pulley and the lower idler pulley in the pulley box (Fig. 14).
6. Turn the right (lower) knob on the front pulley box to adjust the mower drive belt (Fig. 13). There needs to be a 1/2 inch (13 mm) deflection in the belt.

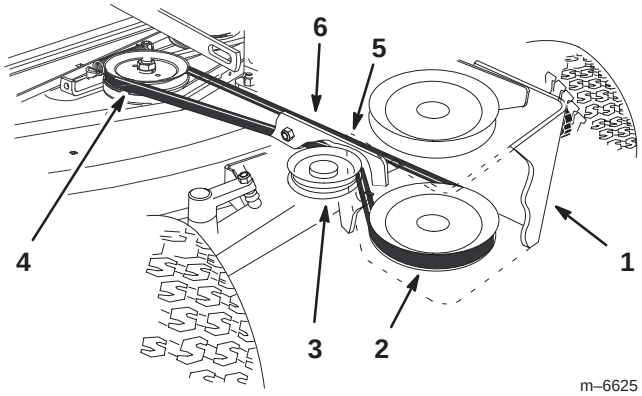

Figure 22

1. Pulley box
2. Lower pulley
3. Lower Idler pulley
4. Mower center pulley
5. Mower drive belt
6. Check 1/2 inch deflection here