Form No. 3329–545

Z200

Z Master® with 52in SFS Side Discharge Mower

Model No. 74233—230006001 and Up

Parts Catalog

Ordering Replacement Parts

To order replacement parts, please supply: the part number, the quantity, and the description of each part desired.

Understanding Reference Numbers

Each identified part in an illustration has a reference number. The reference number for a part also appears in the parts list, along with other information about the part.

This catalog uses two special reference number formats, one to indicate parts in a service assembly and another to indicate the quantity of a given part in an illustration.

Service Assembly Reference Numbers

Parts in service assemblies have reference numbers in the form **a:b.** The **a** represents the reference number of the entire service assembly and the **b** represents a sequential number unique to each part within the service assembly.

For example, a wheel assembly might be identified by reference number **6**, the tire by **6:1**, the valve by **6:2**, and the wheel by **6:3**. When you order the assembly identified by reference number 6, you receive all parts identified by reference numbers 6:1, 6:2, and 6:3. However, you may also order any part individually.

Reference numbers of this type appear in illustrations and in part lists.

Reference Numbers Indicating Quantity

In an illustration, if a reference number indicates more than one part, the reference number has the form **nX y.** The **n** represents the quantity of the part, the **X** is the multiplication symbol, and the **y** represents the reference number.

For example, in an illustration, the reference number **2X 37** means that two of the parts identified by reference number 37 are indicated.

© The TORO Company — 2003
All Rights Reserved

Contents

Description	Page
Front Frame Assembly	4
Caster and Wheel Assembly	5
Main Frame Assembly	6
Brake and Wheel Hub Assembly	7
Steering Control Assembly	8
Hydraulic System Assembly	9
Seat Assembly	11
Seat Assembly No. 1–633705	12
Deck Connection Assembly	13
Drive Idler Assembly	14
Engine and Clutch Assembly	15
Guard Assembly	16
Fuel System Assembly	17
Electrical System Assembly	18
Deck and Wheel Gage Assembly	19
Deck Assembly No. 106–5879	20
Spindle and Pulley Assembly	21
Belt and Idler Arm Assembly	22
Electrical Schematic	23
Group 1 – Crankshaft Assembly Kohler CH20S–64684	24
Group 2 – Crankscase Assembly Kohler CH20S–64684	25
Group 3 – Oil Pan/Lubrication Assembly Kohler CH20S–64684	26
Group 4 – Head/Valve/Breather Assembly Kohler CH20S–64684	27
Group 5 – Ignition/Electrical Assembly Kohler CH20S–64684	29
Group 6 – Blower Housing Assembly Kohler CH20S–64684	30
Group 7 – Starter Assembly Kohler CH20S–64684	31
Group 8 – Fuel System Assembly Kohler CH20S–64684	32
Group 9 – Engine Control Assembly Kohler CH20S–64684	33
Group 10 – Air Intake/Filtration Assembly Kohler CH20S–64684	34
Group 11 – Exhaust Assembly Kohler CH20S–64684	35

Accessories

Description	Model / Part No.
Suspension Seat Kit	99–8522
Deck Lift Assist Kit	100–4336
Atomic Blade Assembly	104–1301
Striping Kit	30121
Recycler Kit	59225
Hitch Kit	99–8925
Mulching Kit	59227
Spark Arrestor Kit	105–1672
Filter Minder	99–4664
Stand Kit	105–1622
DFS Bagger	78491
Boot and Tube Kit (For DFS Bagger)	78494
ROPS	TORO Dealer

Part Description Abbreviations

Part descriptions in this catalog may include the following abbreviations.

Abbreviation	Meaning
AR	as required
ASM	assembly
CARR	carriage
DEG	degrees
FH	flat head
GA	gauge
HF	hex flange
HH	hex head
HHF	hex head flange
HLH	hex lag head
HJ	hex jam
HOC	height-of-cut
HS	hex socket
HSBH	hex socket button head
HSFH	hex socket flat head
HSH	hex socket head
HWH	hex washer head
HWHTF	hex washer head thread forming
HYD	hydraulic
INC	incorporated
LH	left hand
NI	nylon insert
PPH	Phillips pan head
PTH	Phillips truss head
PTO	power take off
RH	right hand
SFH	slotted fillister head
SHH	slotted hex head
SQH	square head
SHWH	slotted hex washer head
SPH	slotted pan head
SRH	slotted round head
STD	standard
TAP	self tapping
TTH	Torx truss head
WH	wing head

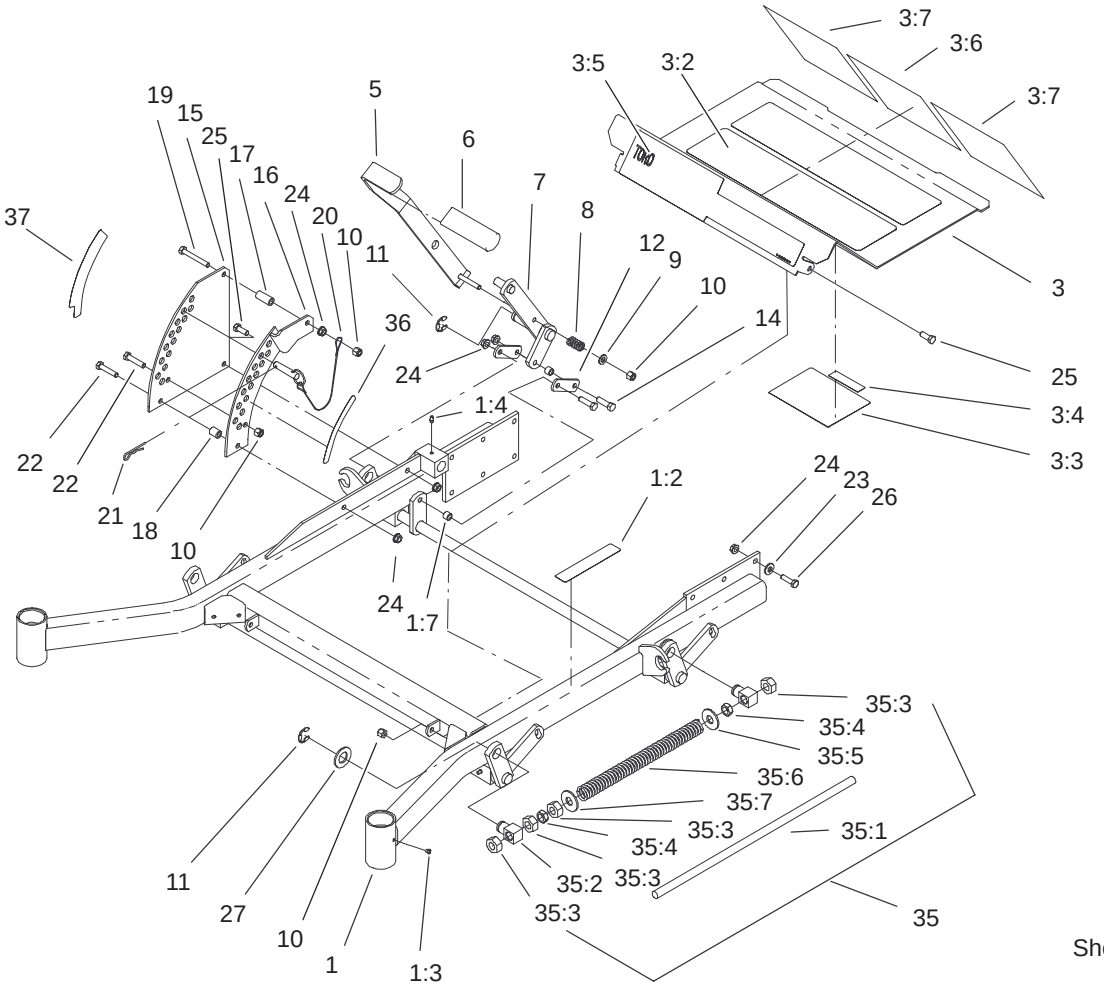

Sheet No.: 2

Front Frame Assembly

Ref. No.	Part No.	Qty.	Description
1	105–3186	1	Frame ASM
1:2	1–633818	1	Decal–Warning
1:3	1–811010	2	Plug
1:4	302–19	5	Fitting–Grease
1:7	103–1918	1	Bushing
3	106–6587	1	Floorpan ASM
3:2	1–633553	2	Pad–Antiskid
3:3	1–633766	1	Decal–Check
3:4	98–5954	1	Decal–Missing, Cover
3:5	1–633737	1	Decal–Z Master
3:6	106–6571	1	Decal–Danger, Slope
3:7	106–6572	2	Pad, Anti Skid
5	103–2083–03	1	Lever–Lift
6	1–633295	1	Grip–Lever, Lift
7	103–2064–03	1	Arm–Lift, Deck
8	1–633325	1	Spring–Compression
9	3256–24	1	Washer–Flat
10	3296–39	5	Nut–Lock, NI
11	32151–103	5	Ring–Snap
12	1–633068	2	Arm–Lift, Deck
14	323–29	2	Screw–HH
15	1–633889–01	1	Plate–Lift, Deck
16	1–632899–01	1	Plate–Lift, Deck
17	1–633082	1	Bushing–Lever, Lift
18	1–633080	1	Bushing–Lever, Lift
19	323–13	1	Screw–HH

Ref. No.	Part No.	Qty.	Description
20	1–633097	1	Pin–Hitch W/Lanyard
21	1–806005	1	Pin–Hair
22	323–9	2	Screw–HH
23	98–5975	12	Washer–Belleville
24	3290–357	17	Nut–HHF
25	323–6	3	Screw–HH
26	323–7	12	Screw–HH
27	3256–29	4	Washer–Flat
☆35		2	Spring ASM
35:1	1–633096	1	Rod–Lift, Deck
35:2	1–633441	2	Swivel–Deck Mount, Rear
35:3	3217–11	4	Nut–Hex
35:4	3218–6	2	Nut–Jam
35:5	3256–7	1	Washer–Flat
35:6	1–653009	1	Spring–Compression
35:7	3256–27	1	Washer–Flat
36	1–633706	1	Decal–Height, Deck
37	1–633345	1	Decal–Height, Deck

☆ Not serviced separately

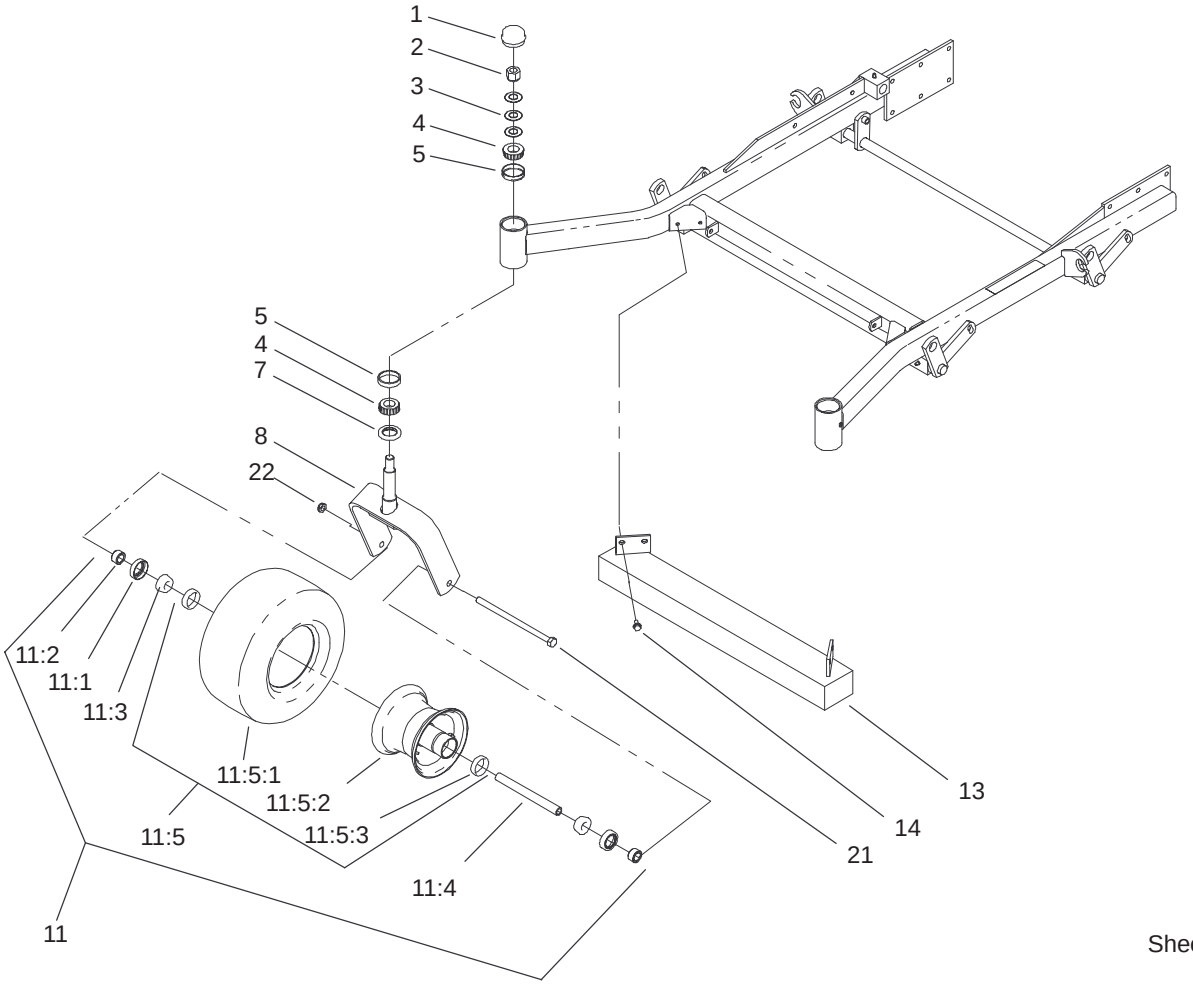

Sheet No.: 3

Caster and Wheel Assembly

Ref. No.	Part No.	Qty.	Description
1	1–543513	2	Cap–Grease
2	3296–51	2	Nut–Lock, NI
3	1–633508	6	Washer–Bellville
4	254–94	4	Bearing–Cone, Taper
5	254–72	4	Bearing–Cup, Tapered
7	1–543511	2	Seal–Grease
8	1–642111–01	2	Caster
11	1–644251	2	Caster Wheel ASM
11:1	1–633580	2	Seal–Bearing
11:2	1–633581	2	Spacer–Bearing
11:3	1–633585	2	Bearing–Cone, Taper
11:4	1–633959	1	Spacer–Caster, Front
☆11:5		1	Wheel And Tire ASM
11:5:1	1–523009	1	Tire
11:5:2	1–633987	1	Wheel
11:5:3	1–633584	2	Bearing–Cup
13	1–632802–01	1	Weight ASM
14	32144–70	4	Screw–HH
21	325–24	2	Screw–HH
22	3296–45	2	Nut–Lock, NI

Ref. No.	Part No.	Qty.	Description

☆ Not serviced separately

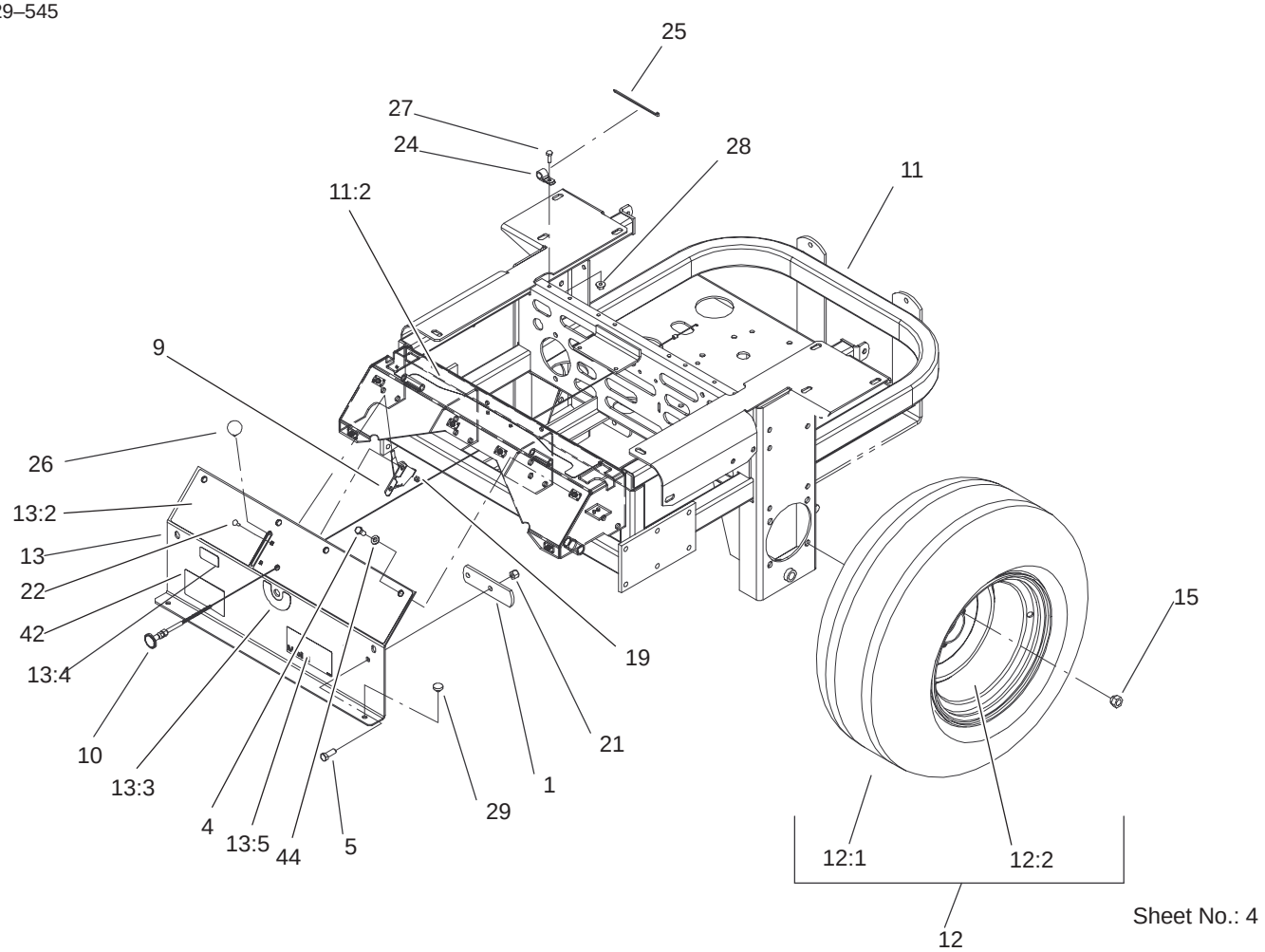

Main Frame Assembly

Ref. No.	Part No.	Qty.	Description
1	1–633964–03	1	Stop–Brake, Park
4	322–3	6	Screw–HH
5	323–6	2	Screw–HH
9	1–633696	1	Cable–Throttle
10	1–603336	1	Control–Choke
11	105–3648	1	Main Frame ASM
11:2	103–2433	1	Decal–Console, Top
12	1–653010	2	Wheel And Tire ASM
12:1	1–653160	1	Tire
12:2	1–653158	1	Wheel
13	106–6584	1	Console ASM
13:2	106–6570	1	Decal–Control Panel
13:3	103–0262	1	Decal–Valve, Fuel
13:4	98–4387	1	Decal–Protection, Ear
13:5	104–8172	1	Decal–Mobil 1
15	242–50	8	Nut–Lug
19	3296–2	2	Nut–Lock
21	3296–39	2	Nut–Lock, NI
22	1–807513	2	Bolt–CARR
24	1–513762	1	Clip–Loom
25	1–303335	1	Tie–Plastic
26	1–513592	1	Knob–Ball
27	321–4	1	Screw–HH
28	32128–33	1	Nut–HF
29	1–513658	2	Bumper–Catcher, Grass

Ref. No.	Part No.	Qty.	Description
42	105–3185	1	Decal–Z 200
44	3256–23	6	Washer–Flat

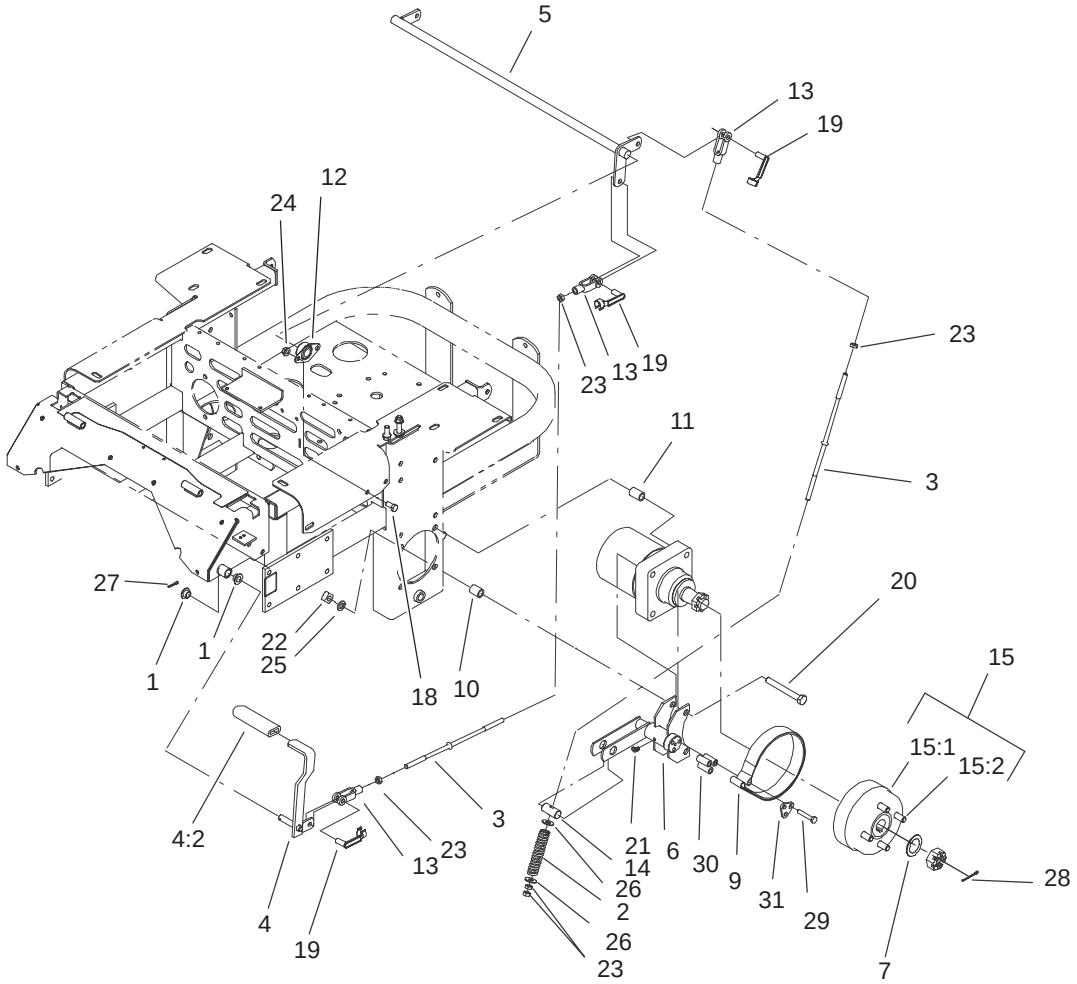

Sheet No.: 5

Brake and Wheel Hub Assembly

Ref. No.	Part No.	Qty.	Description
1	1–513140	2	Bearing–Control
2	1–633454	2	Spring–Brake
3	1–633477	3	Rod–Brake
4	1–634500	1	Brake Lever ASM
4:2	1–633268	1	Grip–Lever, Brake
5	1–632217–03	1	Shaft–Brake
6	103–0352–03	2	Bracket–Brake
7	1–523157	2	Washer–Spacer
9	103–0355	2	Band–Brake
10	1–633380	4	Spacer–Wheel, Short
11	1–633382	4	Spacer–Wheel, Long
12	1–633102	2	Bearing–Flange, Side
13	1–633131	4	Yoke–Linkage, Brake
14	1–633144	2	Pin–Trunion
15	103–0590	2	Hub–Wheel
15:1	103–0589	1	Hub–Wheel
15:2	1–633926	4	Stud–Wheel
18	323–4	4	Screw–HH
19	103–2399	4	Pin–Spring, Clevis
20	325–17	8	Screw–HH
21	1481	2	Fitting–Grease
22	103–0131	8	Nut–Square
23	3219–3	8	Nut–HH
24	3290–357	4	Nut–HHF
25	3253–7	8	Washer–Lock
26	3256–4	4	Washer–Flat

Ref. No.	Part No.	Qty.	Description
27	3272–10	1	Pin–Cotter
28	1–806800	2	Pin–Cotter
29	322–9	6	Screw–HH
30	103–0384	6	Spacer
31	103–0374	2	Retainer–Band, Brake

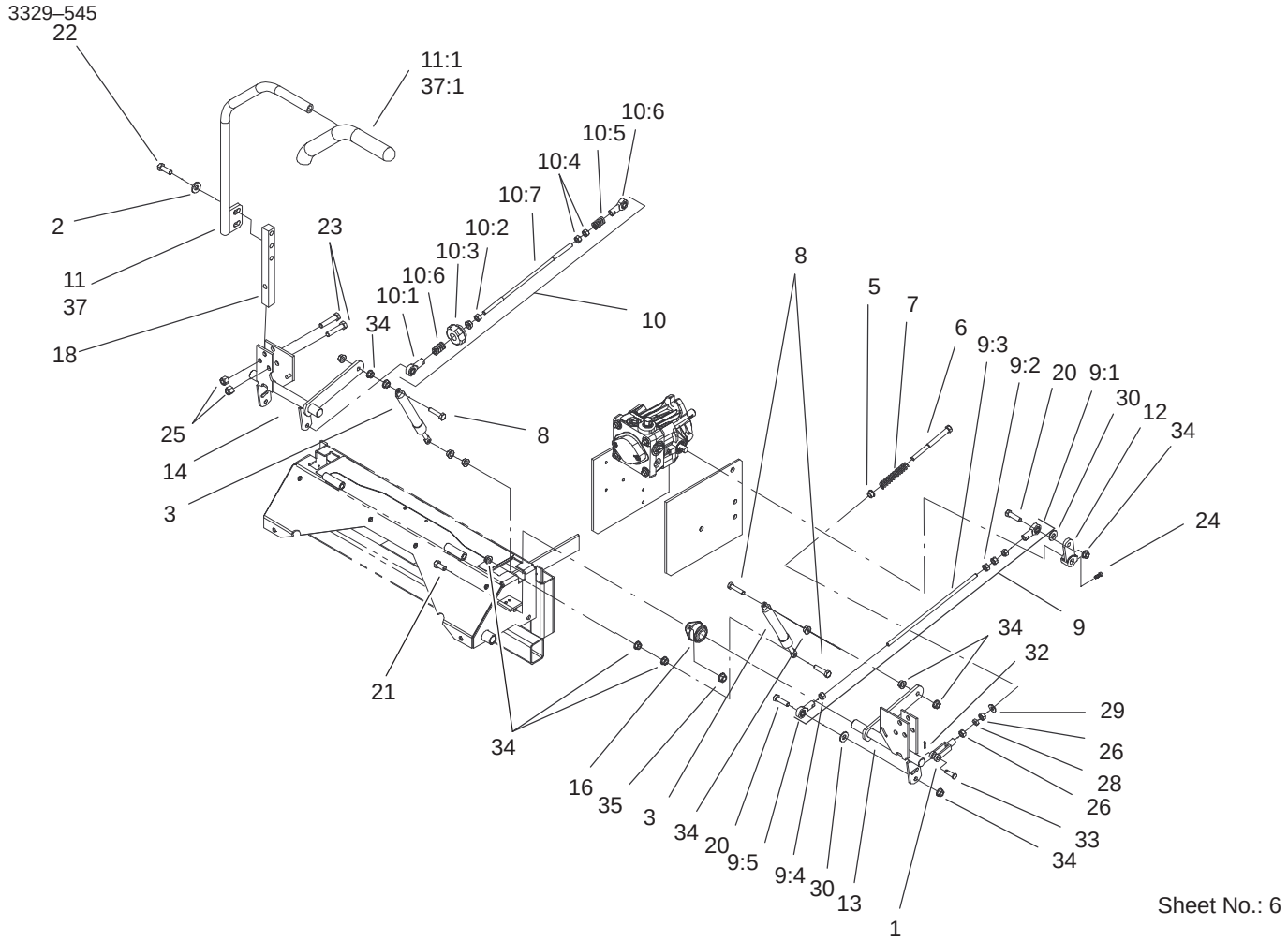

Steering Control Assembly

Ref. No.	Part No.	Qty.	Description
1	1–303105	2	Yoke–Adjustable
2	98–5975	4	Washer–Belleville
3	103–2913	2	Damper–Control, Motion
5	1–603735	2	Bushing–Flanged
6	1–603737	2	Bolt–Return, Neutral
7	1–603807	2	Spring–Return, Neutral
8	1–403180	4	Screw–HH
9	103–3074	1	LH Pump Linkage ASM
9:1	1–543017	1	Balljoint–RH
9:2	3219–2	3	Nut–Hex
9:3	103–3064	1	Link–Rod, Tracking
9:4	1–804524	1	Nut
9:5	1–633152	1	Balljoint–Thread, LH
10	103–3061	1	Tracking Rod ASM
10:1	1–543017	1	Balljoint–RH
10:2	3219–2	1	Nut–Hex
10:3	103–3060	1	Knob–Tracking
10:4	1–804524	2	Nut
10:5	1–323245	2	Spring–Compression
10:6	1–633152	1	Balljoint–Thread, LH
10:7	103–3064	1	Link–Rod, Tracking
11	103–0632	1	RH Lever ASM
11:1	1–633257	1	Grip–Control, Motion

Ref. No.	Part No.	Qty.	Description
12	1–632208	2	Arm–Control, Pump
13	1–642319	1	Control–Motion, LH
14	1–642320	1	Control–Motion, RH
16	1–633102	4	Bearing–Flange, Side
18	103–0407	2	Arm–Shaft, Control
20	322–6	4	Screw–HH
21	323–4	8	Screw–HH
22	323–6	4	Screw–HH
23	323–9	6	Screw–HH
24	1–803022	2	Screw–Set
25	3296–39	6	Nut–Lock, NI
26	3219–2	4	Nut–Hex
28	3220–2	2	Nut
29	3256–2	2	Washer–Flat
30	3256–3	4	Washer–Flat
32	3272–5	2	Pin–Cotter
33	1–808280	2	Pin–Clevis
34	32128–20	16	Nut–HF
35	3290–357	8	Nut–HHF
37	103–0631	1	LH Lever ASM
37:1	1–633257	1	Grip–Control, Motion

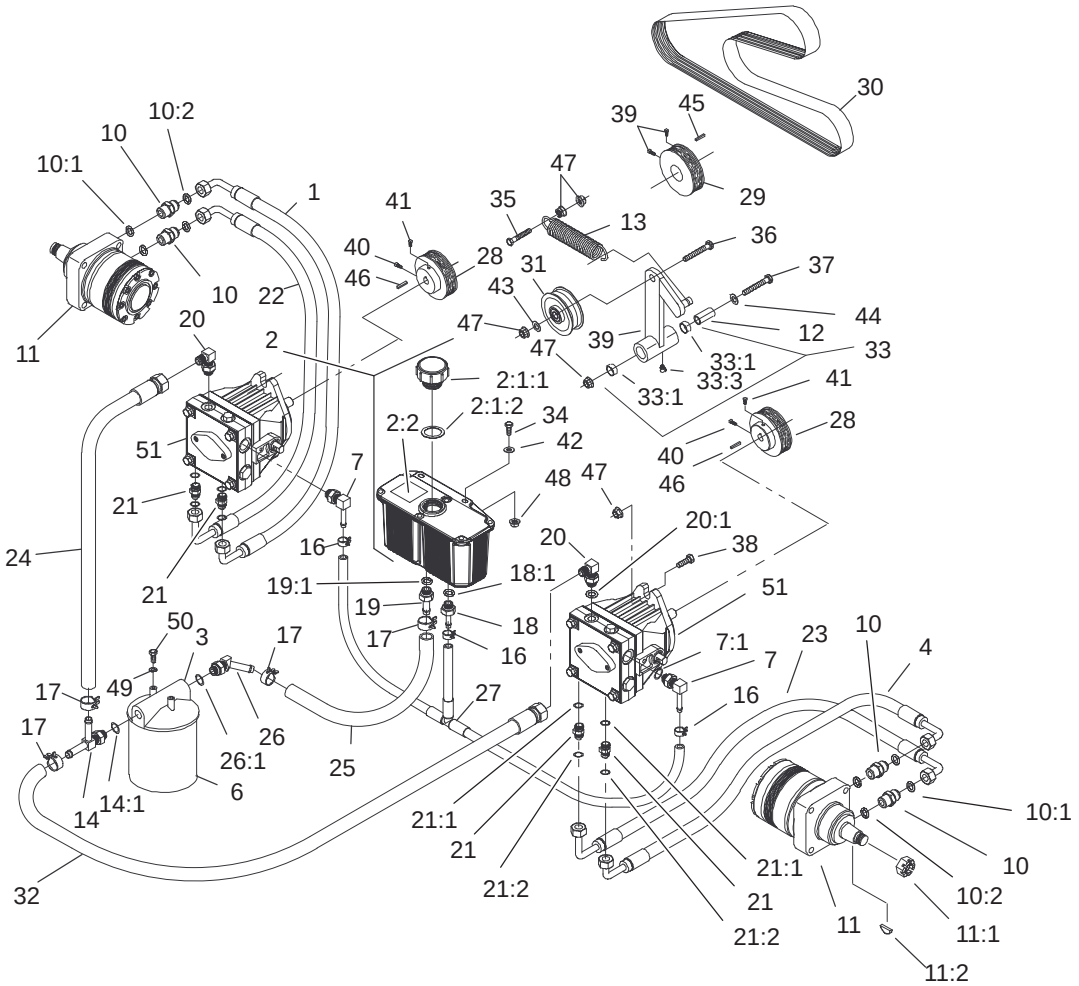

Sheet No.: 7

Hydraulic System Assembly

Ref. No.	Part No.	Qty.	Description
1	103–3736	1	HYD Hose ASM
2	103–1947	1	HYD Reservoir ASM
☆2:1		1	Reservoir–HYD
2:1:1	103–1948	1	Cap–Reservoir, HYD
2:1:2	103–1949	1	Gasket–Cap
2:2	1–523552	1	Decal–Tank, HYD
3	104–7836	1	Head–Filter
4	103–3733	1	HYD Hose ASM
6	1–633752	1	Filter–HYD, Winter
6	1–633750	1	Filter–HYD
7	103–1799	2	Elbow–90°
7:1	237–42	1	O–Ring
10	1–603991	4	Fitting–Straight
10:1	237–80	1	O–Ring
10:2	1–603992	1	O–Ring
11	1–523328	2	Motor–Wheel
11:1	1–809036	1	Nut–HH
11:2	3257–42	1	Key–Woodruff
*11:99	103–2748	1	Drive Link Kit
*11:99	1–000139	1	Bearing Kit
*11:99	1–000099	1	Seal Kit
12	1–603384	1	Bushing–Pivot, Idler
13	103–3330	1	Spring–Extension
14	103–1828	1	Adapter–Run, Tee
14:1	237–42	1	O–Ring
16	103–1716	3	Clamp–Hose

Ref. No.	Part No.	Qty.	Description
17	103–1988	4	Clamp–Hose
18	103–1801	1	Adapter–Straight
18:1	237–42	1	O–Ring
19	103–1912	1	Adapter–Straight
19:1	237–42	1	O–Ring
20	103–1802	2	Fitting–HYD, 90°
20:1	237–42	1	O–Ring
21	1–603990	4	Fitting–Straight
21:1	237–79	1	O–Ring
21:2	1–603992	1	O–Ring
22	103–3737	1	HYD Hose ASM
23	103–3735	1	HYD Hose ASM
24	103–1826	1	HYD Hose ASM
25	103–1808	1	Hose–HYD
26	103–1807	1	Elbow–45°
26:1	237–42	1	O–Ring
27	103–1806	1	HYD Hose ASM
28	1–633568	2	Sheave
29	1–633567	1	Sheave
30	1–633749	1	Belt–Drive, Pump
31	1–633167	1	Sheave–Idler
32	103–1827	1	HYD Hose ASM
33	1–634277	1	Bearing Arm ASM
33:1	1–513034	2	Sleeve–Bearing
33:3	302–40	1	Fitting–Grease
34	321–6	2	Screw–HH

☆ Not serviced separately
* Not illustrated

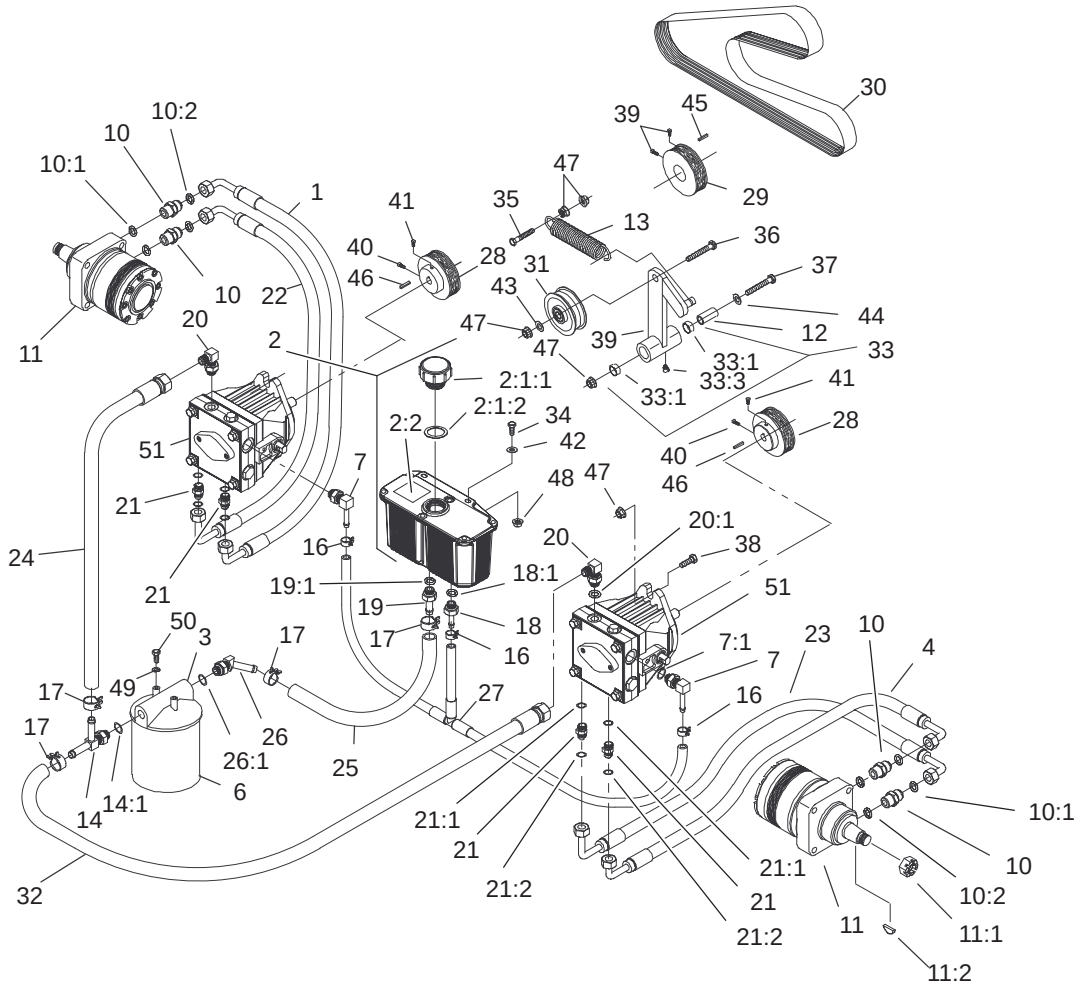

Sheet No.: 7

Hydraulic System Assembly (Continued)

Ref. No.	Part No.	Qty.	Description
35	323–8	1	Screw–HH
36	323–9	1	Screw–HH
37	1–800805	1	Screw–HH
38	323–7	4	Screw–HH
39	1–803022	2	Screw–Set
40	30–1710	2	Screw
41	1–803050	2	Screw–Set
42	3256–22	2	Washer–Flat
43	3256–3	1	Washer–Flat
44	3256–4	1	Washer–Flat
45	13–2840	1	Key–Square
46	1–807272	2	Key
47	3290–357	8	Nut–HHF
48	32128–33	2	Nut–HF
49	1–805004	2	Washer–Lock
50	321–3	2	Screw–HH
51	103–2675	2	Pump–HYD
*51:1	103–2664	1	Input Shaft Kit
*51:2	94–6922	1	Bearing–Thrust
*51:3	103–2666	1	Cylinder Block Kit
*51:4	105–6185	1	Plate–Valve
*51:5	105–6184	1	Seal Overhaul Kit
*51:7	106–2053	1	Shock Valve Kit

Ref. No.	Part No.	Qty.	Description

* Not illustrated

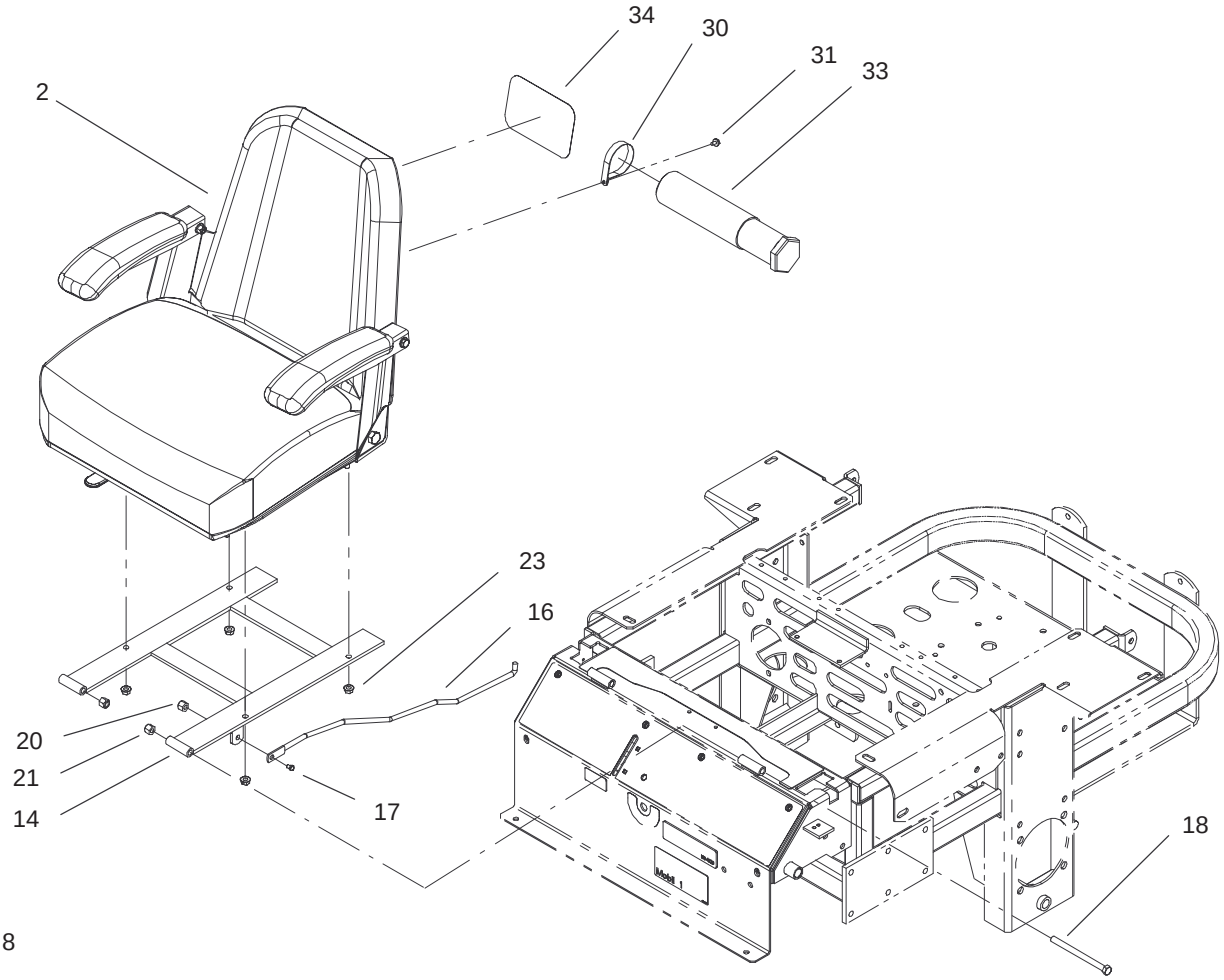

Sheet No.: 8

Seat Assembly

Ref. No.	Part No.	Qty.	Description
2	1–633705	1	Seat ASM
14	1–632187–03	1	Frame–Seat
16	1–633293	1	Rod–Holdup, Seat
17	322–5	1	Screw–HH
18	323–39	2	Screw–HH
20	3296–29	1	Nut–Lock, NI
21	3296–39	2	Nut–Lock, NI
23	32128–20	4	Nut–HF
30	2412–120	2	R–Clamp
31	32104–76	2	Screw
33	74–0720	1	Tube–Manual
34	99–4693	1	Decal–Toro

Ref. No.	Part No.	Qty.	Description

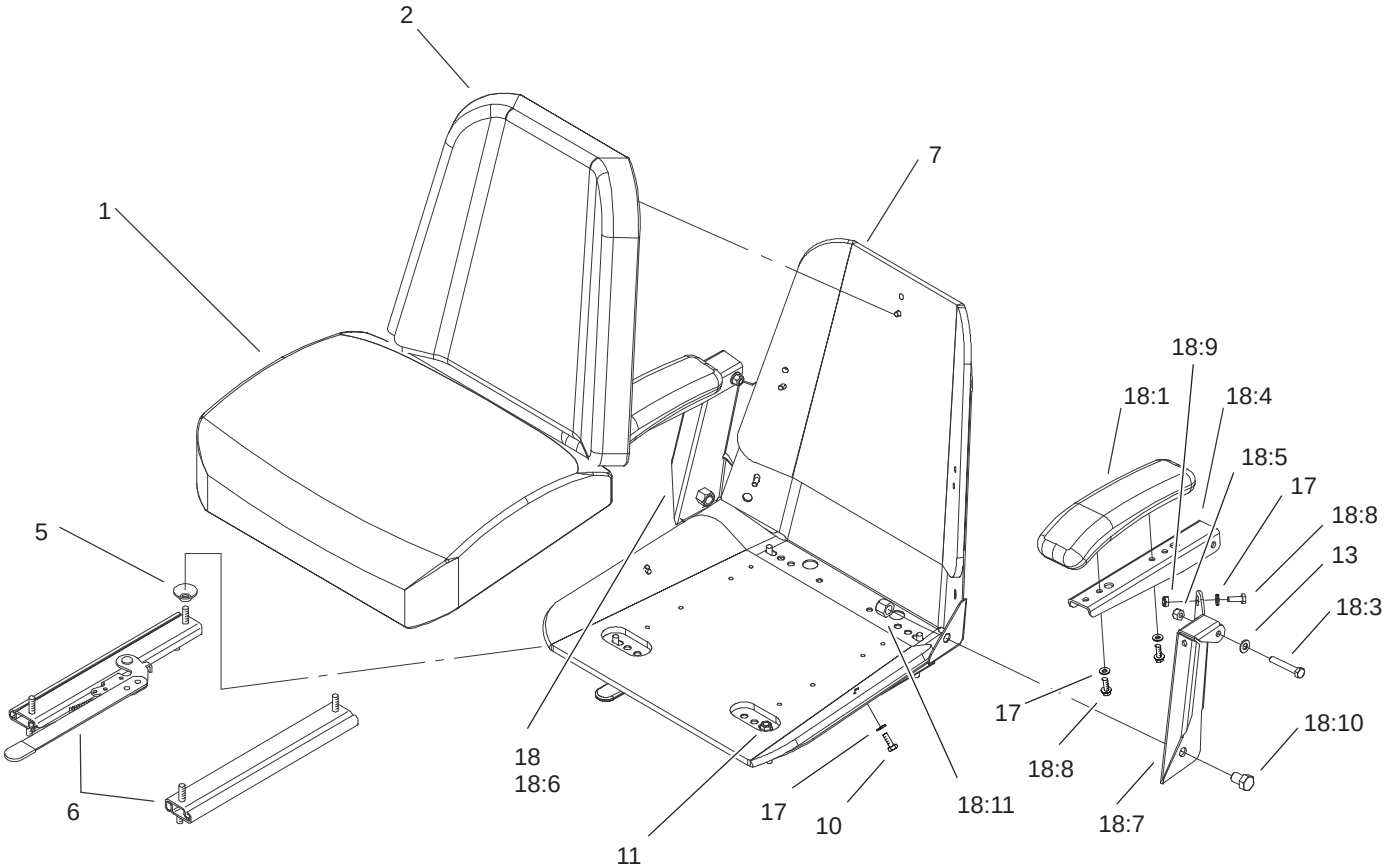

Sheet No.: A1

Seat Assembly No. 1–633705

Ref. No.	Part No.	Qty.	Description
1	103–0290	1	Cushion–Seat, Bottom
2	104–7754	1	Cushion–Seat, Back
5	1–543401	4	Spacer–Track
6	1–643255	1	Track–Seat
7	1–633859	1	Frame–Seat
10	321–4	11	Screw–HH
11	32128–20	4	Nut–HF
13	3256–23	4	Washer–Flat
17	3256–22	11	Washer–Flat
18	105–3620	1	Armrest Kit
18:1	1–633710	2	Cushion–Armrest
18:3	322–10	2	Screw–HH
18:4	105–3623	2	Channel, Armrest
18:5	32153–3	2	Nut–Lock
18:6	105–3621	1	Bracket–Armrest, RH
18:7	105–3622	1	Bracket–Armrest, LH
18:8	321–30	6	Screw–HH
18:9	3296–42	2	Nut–Lock, NI
18:10	325–2	2	Screw–HH
18:11	32153–5	2	Nut–Lock

Ref. No.	Part No.	Qty.	Description

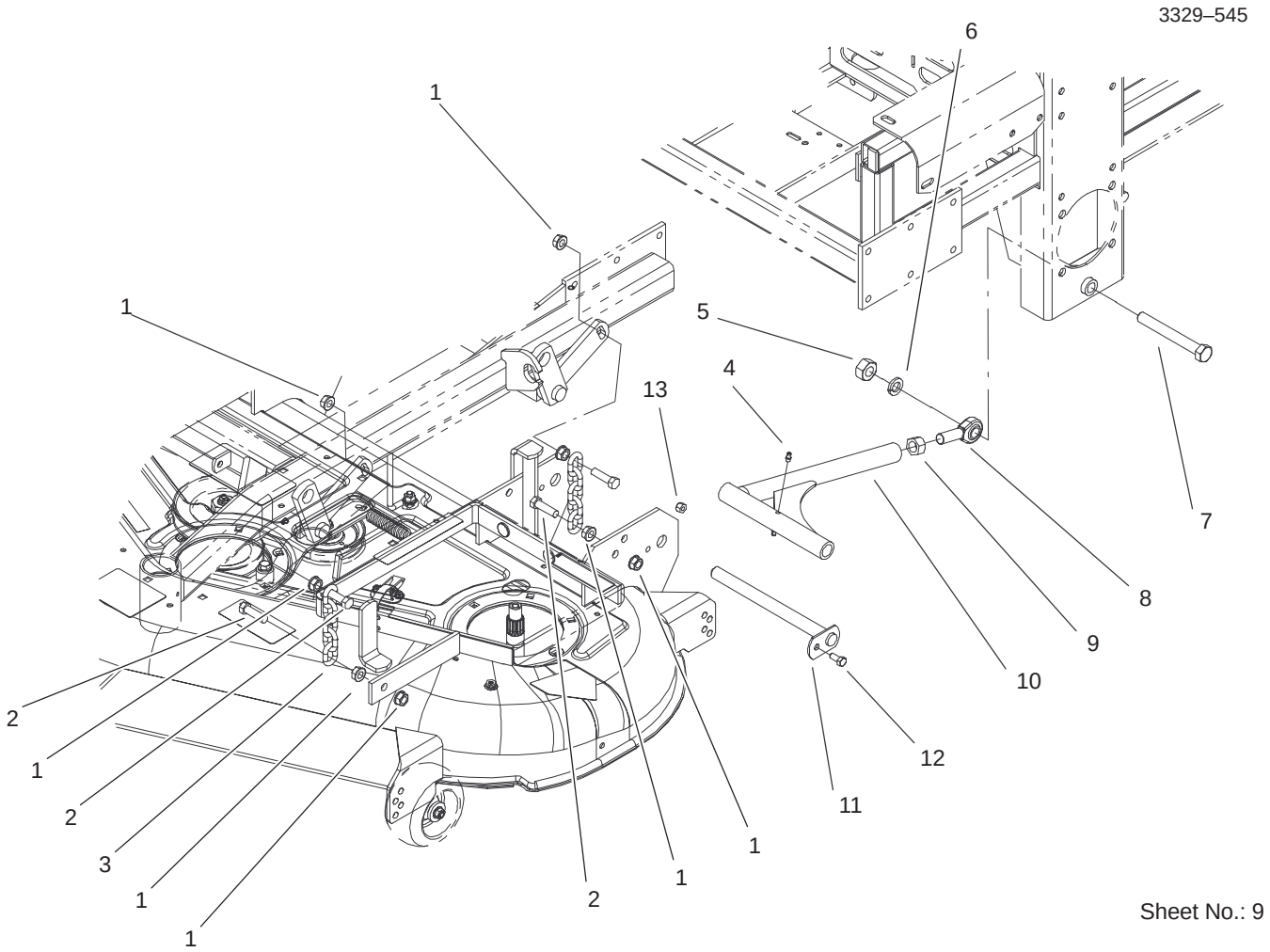

Deck Connection Assembly

Ref. No.	Part No.	Qty.	Description
1	32128–37	16	Nut–HF
2	1–800811	8	Screw–Cap, HH
3	1–633447	4	Chain–Lift, Deck
4	302–19	4	Fitting–Grease
5	3217–11	2	Nut–Hex
6	3253–8	2	Washer–Lock
7	327–11	2	Screw–HH
8	1–633029	2	Balljoint–Spherical
9	3219–6	2	Nut–Hex
10	103–1072–01	2	Strut
11	1–632199–01	2	Pin–Strut
12	322–3	2	Screw–HH
13	3296–29	2	Nut–Lock, NI

Ref. No.	Part No.	Qty.	Description

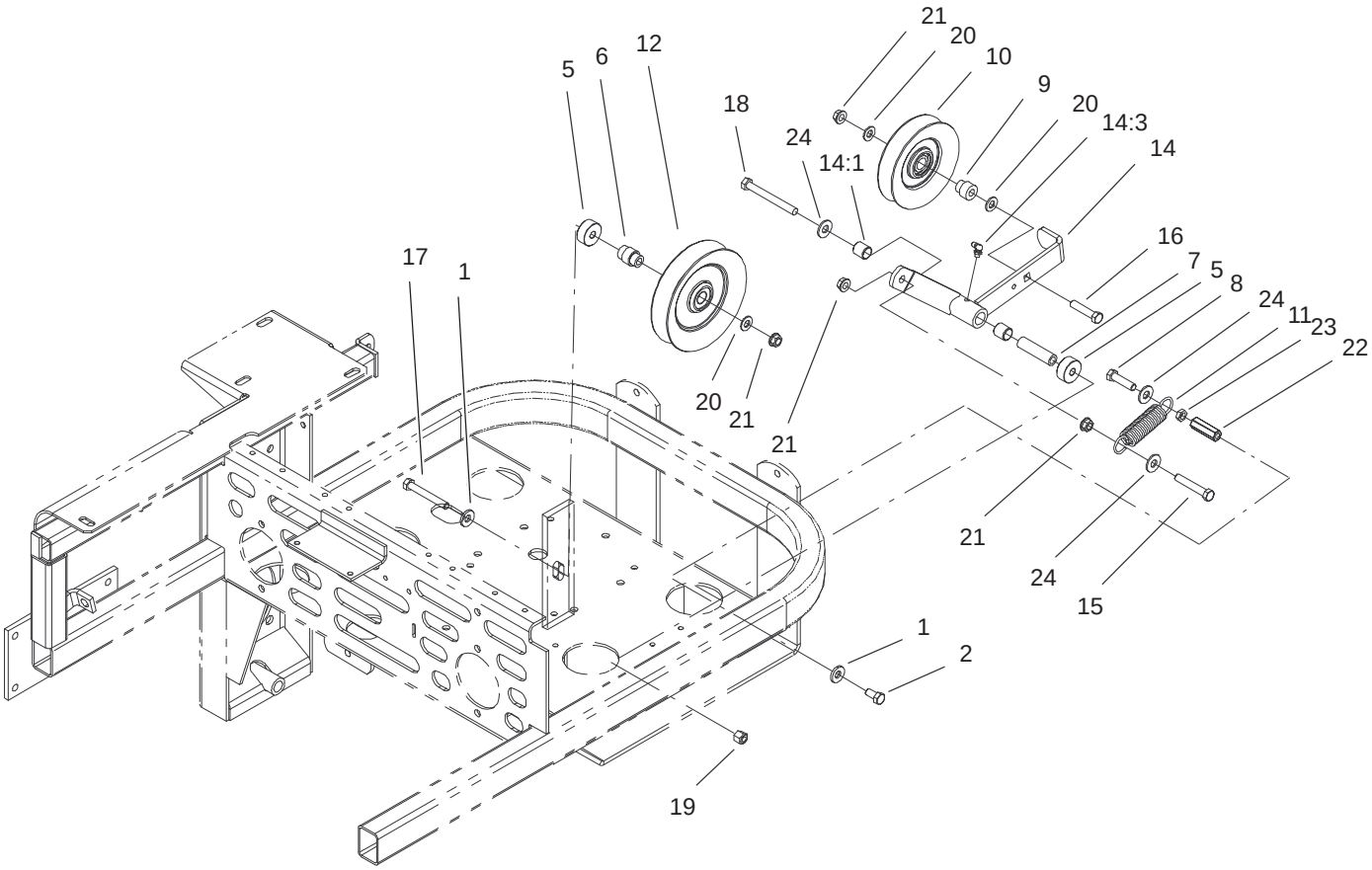

Sheet No.: 10

Drive Idler Assembly

Ref. No.	Part No.	Qty.	Description
1	98–5975	2	Washer–Belleville
2	323–4	1	Screw–HH
5	103–2956	2	Spacer–Idler
6	103–2627	1	Bushing–Idler
7	1–603384	1	Bushing–Pivot, Idler
8	323–8	1	Screw–HH
9	1–603496	1	Bushing–Idler
10	99–4638	1	Idler
11	1–603402	1	Spring–Extension
12	1–633166	1	Pulley–Idler
14	99–4677	1	Idler Arm ASM
14:1	1–513034	2	Sleeve–Bearing
14:3	302–40	1	Fitting–Grease
15	323–11	2	Screw–HH
16	323–9	1	Screw–HH
17	323–20	1	Screw–HH
18	323–16	1	Screw–HH
19	3296–39	1	Nut–Lock, NI
20	3256–24	3	Washer–Flat
21	3290–357	4	Nut–HHF
22	103–3286	1	Nut–Coupling
23	3218–3	1	Nut–Jam
24	3256–4	3	Washer–Flat

Ref. No.	Part No.	Qty.	Description

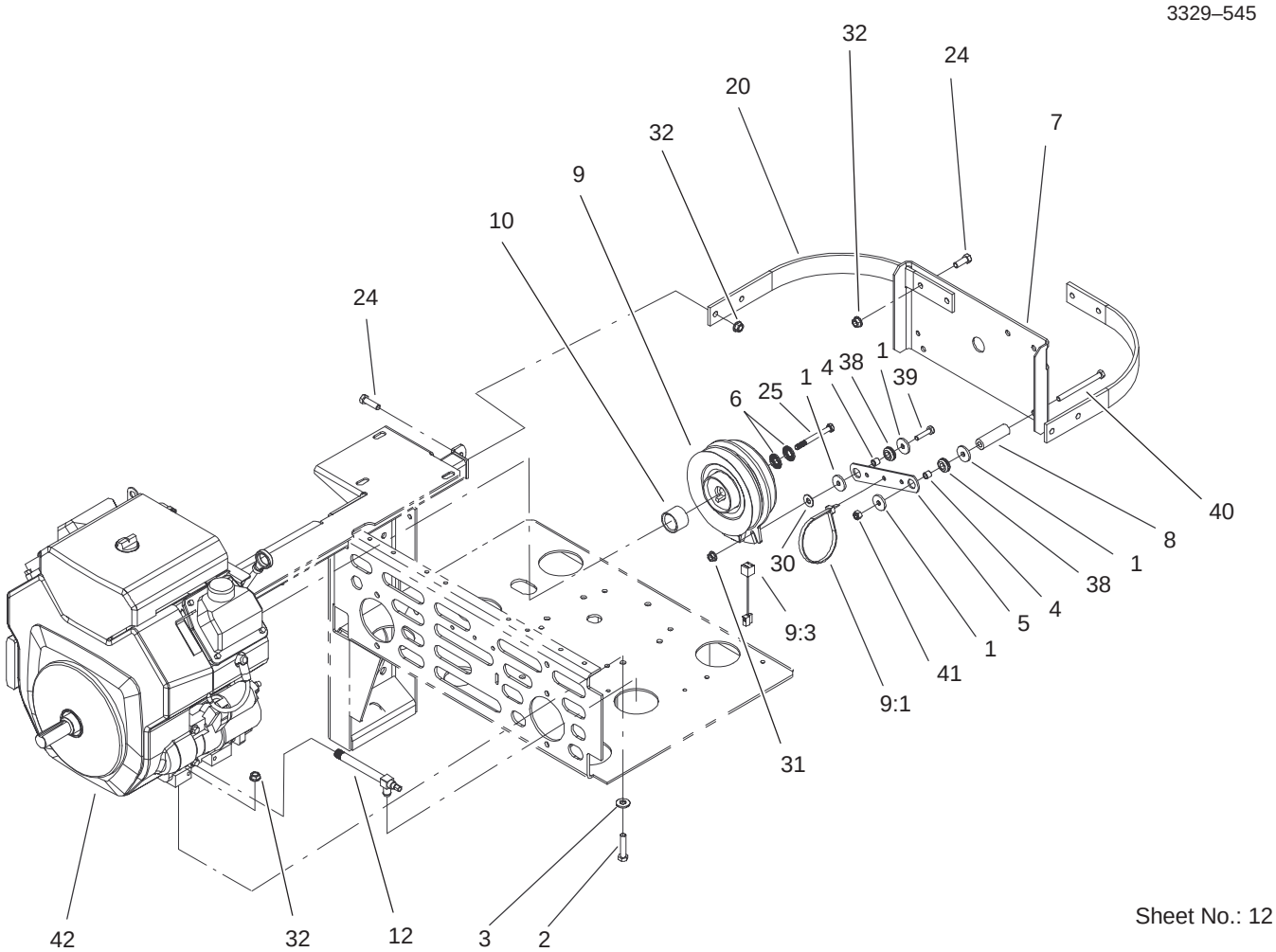

Engine and Clutch Assembly

Ref. No.	Part No.	Qty.	Description
1	1–613235	4	Washer
2	323–9	4	Screw–HH
3	98–5975	4	Washer–Belleville
4	1–633545	2	Spacer–Grommet
5	1–633543–03	1	Strap–Clutch, Brake
6	1–603610	2	Washer–Spring
7	1–633615–03	1	Guard–Clutch
8	1–633988	1	Spacer–Anchor, Clutch
9	103–0662	1	Clutch ASM
9:1	1–303335	1	Tie–Plastic
9:3	105–1670	1	Harness–Jumper, Clutch
10	1–633453	1	Spacer–Clutch
12	103–1996	1	Valve–Oil Drain, Long
20	1–643264–03	2	Bracket–Guard, Top
24	323–6	6	Screw–HH
25	3212–10	1	Screw–HH
30	3256–3	1	Washer–Flat
31	32128–20	1	Nut–HF
32	3290–357	8	Nut–HHF
38	1–633630	2	Grommet–Brake
39	322–6	1	Screw–HH
40	322–19	1	Screw–HH
41	3296–29	1	Nut–Lock, NI

Ref. No.	Part No.	Qty.	Description
☆42		1	Engine–Kohler, Ch20s–64684

☆ Not serviced separately

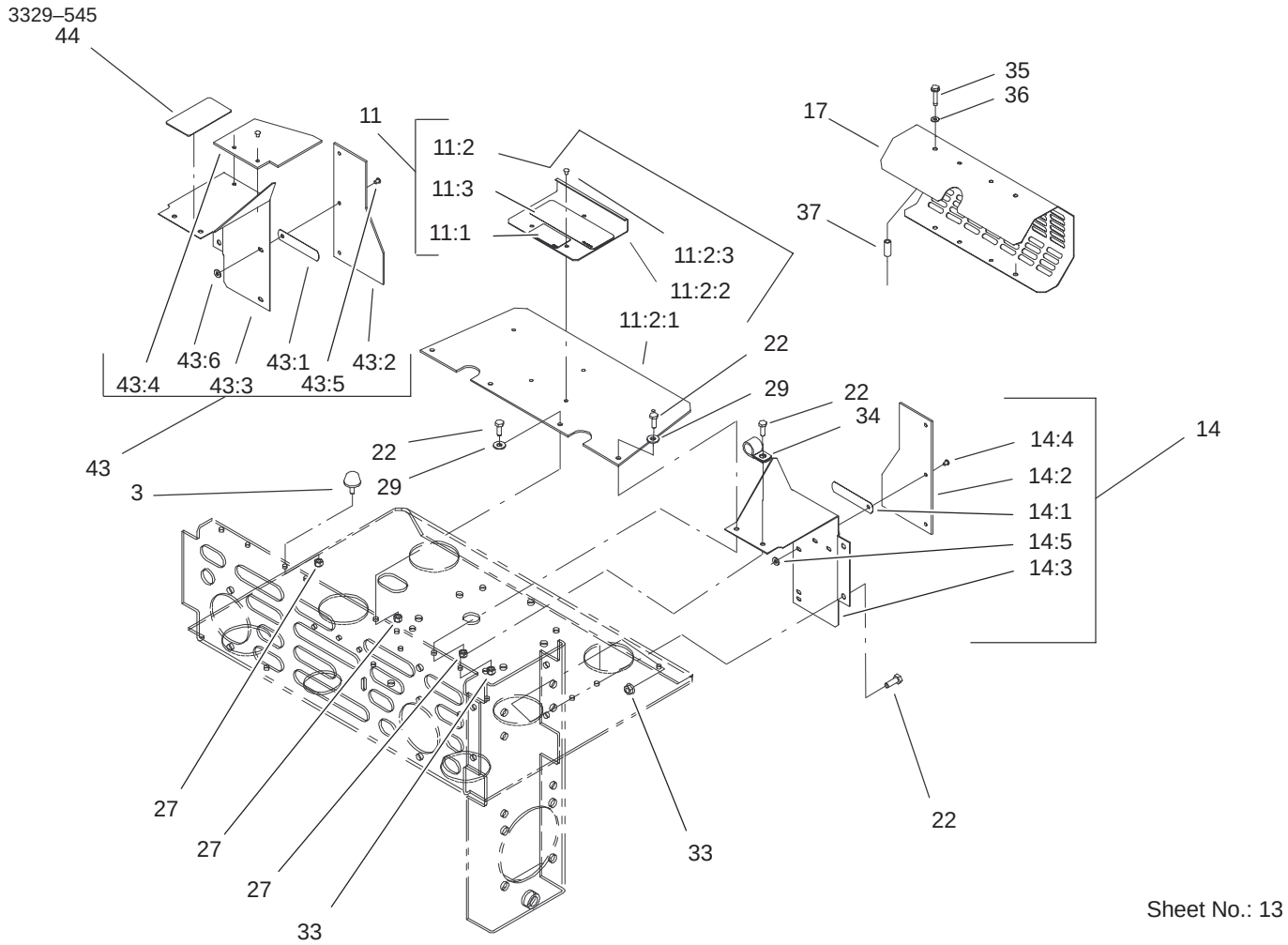

Sheet No.: 13

Guard Assembly

Ref. No.	Part No.	Qty.	Description
3	1–523420	2	Bumper
11	1–644276	1	Shield ASM
11:1	1–633462	1	Decal–Important
11:2	1–634308	1	Shield/Lift ASM
11:2:1	103–1308	1	Shield–Engine
11:2:2	1–633300–03	1	Lift–Shield
11:2:3	1–803035	3	Rivet–Pop
11:3	103–0368	1	Decal–Devices, Rotating
14	1–634796	1	LH Shield ASM
14:1	1–523285	1	Clip–Baffle, Rear
14:2	1–633301	1	Shield–Engine
14:3	1–633795–03	1	Baffle–Engine Shield, LH
14:4	1–803035	3	Rivet–Pop
14:5	3256–63	3	Washer–Flat
17	1–643313–03	1	Guard–Muffler
22	321–4	10	Screw–HH
27	3296–42	6	Nut–Lock, NI
29	3256–2	4	Washer–Flat
33	32128–33	5	Nut–HF
34	1–633396	1	Clip–Loom
35	1–809076	2	Screw
36	1–323235	2	Washer–Spring
37	1–323236	2	Spacer
43	1–644316	1	RH Shield ASM

Ref. No.	Part No.	Qty.	Description
43:1	1–523285	1	Clip–Baffle, Rear
43:2	1–633301	1	Shield–Engine
43:3	1–633794–03	1	Baffle–Engine Shield, RH
43:4	1–643315	1	Baffle–Cooler, Engine
43:5	1–803035	5	Rivet–Pop
43:6	3256–63	5	Washer–Flat
44	1–643339	1	Decal–Routing, Belt

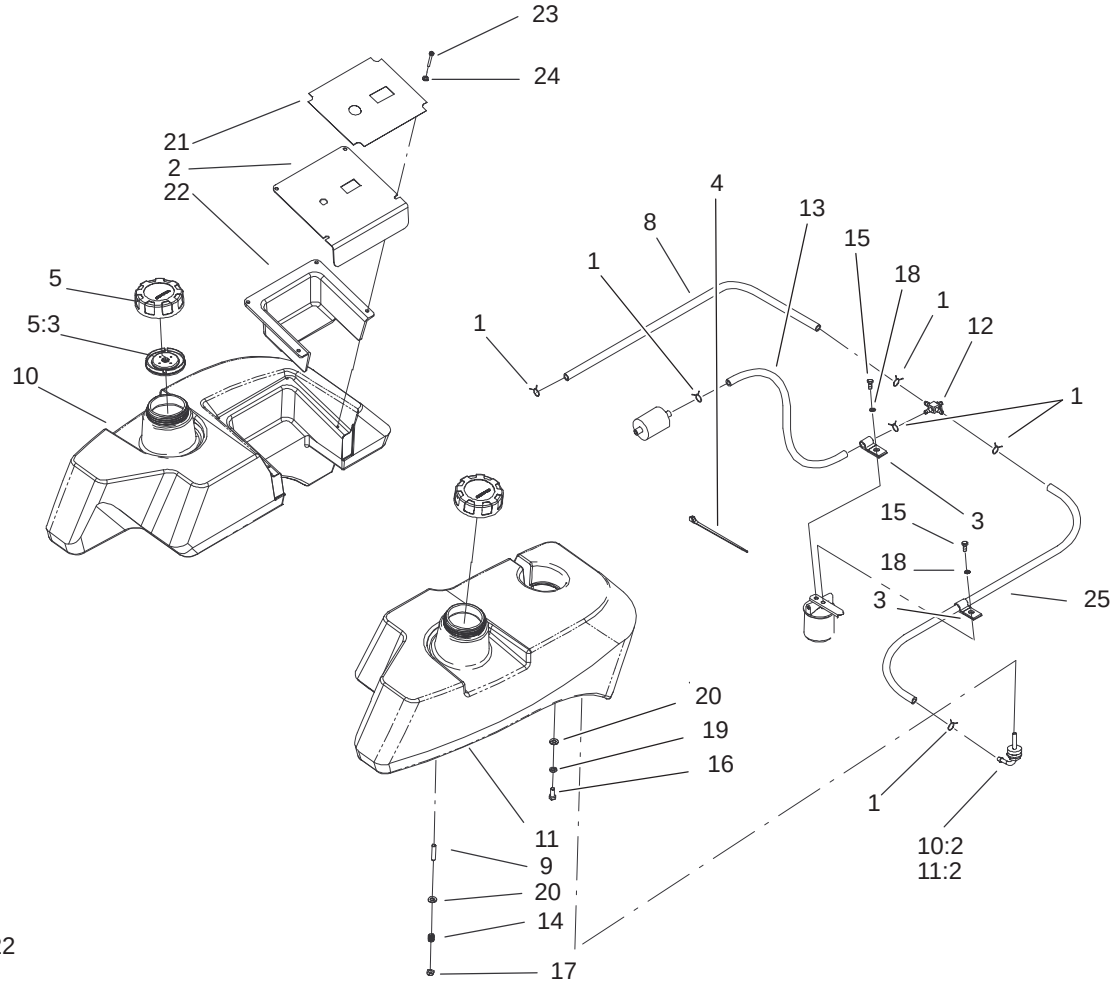

Sheet No.: 22

Fuel System Assembly

Ref. No.	Part No.	Qty.	Description
1	1–303077	6	Clamp
2	99–4656–03	1	Panel–Control
3	1–513762	2	Clip–Loom
4	1–303335	1	Tie–Plastic
5	88–3980	2	Gas Cap ASM
5:3	88–4010	1	Gasket–Cap, Gas
8	1–543456	1	Hose–Fuel
9	1–633023	6	Stud
10	105–3629	1	LH Fuel Tank ASM
10:2	103–2605	1	Fitting–Fuel, Bulkhead
11	105–3628	1	RH Fuel Tank ASM
11:2	103–2605	1	Fitting–Fuel, Bulkhead
12	1–633347	1	Valve–Fuel
13	103–0216	1	Hose
14	1–633349	6	Spring–Tank, Fuel
15	321–3	2	Screw–HH
16	322–3	2	Screw–HH
17	3296–47	6	Nut–Lock, NI
18	1–805004	2	Washer–Lock
19	1–805005	2	Washer–Lock
20	3256–23	8	Washer–Flat
21	99–4632	1	Decal–Panel, Control
22	99–4940	1	Shield–Panel, Control
23	1–803071	4	Screw
24	1–303435	4	Washer–Spring
25	103–2885	1	Hose–Fuel

Ref. No.	Part No.	Qty.	Description

3329–545

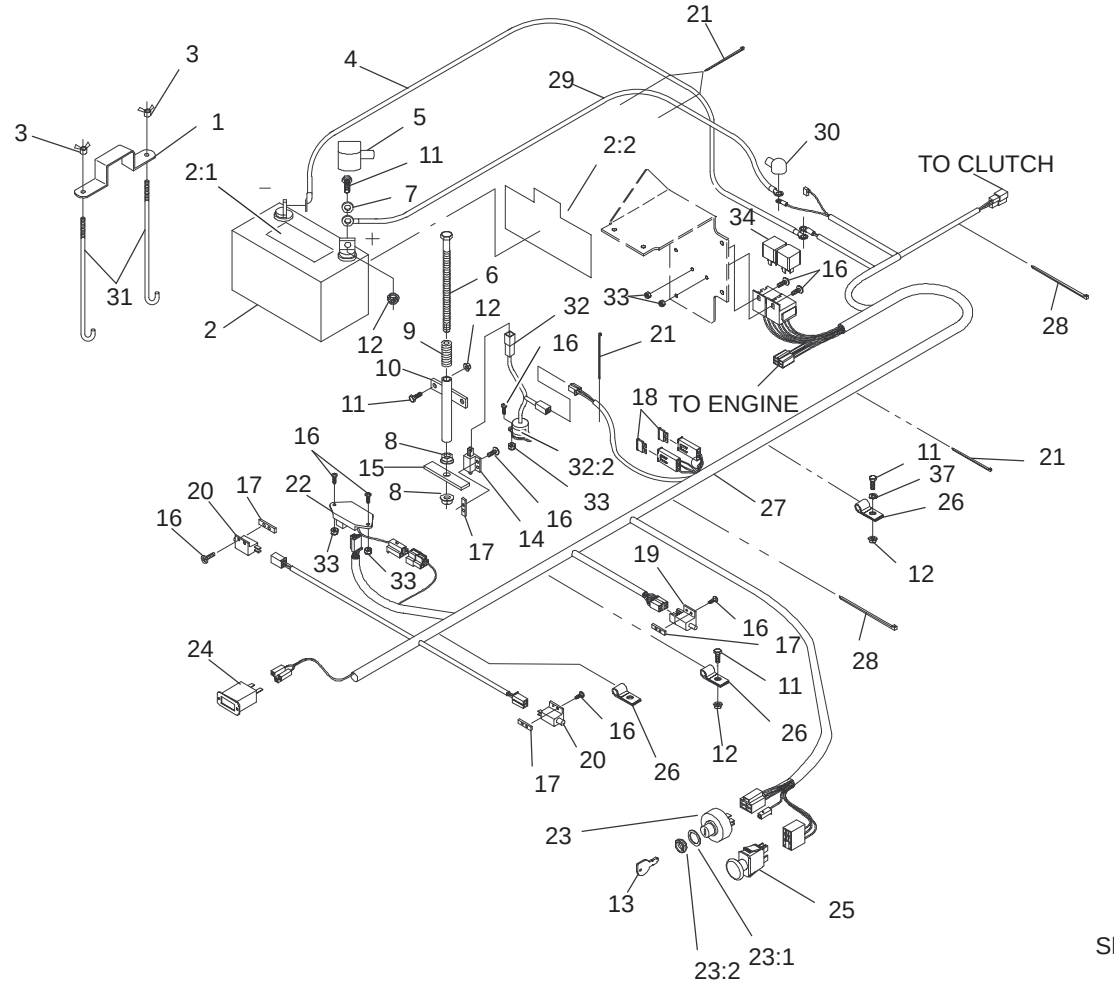

Sheet No.: 27

Electrical System Assembly

Ref. No.	Part No.	Qty.	Description
1	1–633652–03	1	Strap–Holddown
2	105–1692	1	Battery
2:1	104–4163	1	Decal–Battery
2:2	104–4164	1	Decal–Battery
3	1–543792	2	Wingnut
4	1–633307	1	Wire–Ground
5	1–543391	1	Insulator–Battery
6	1–800282	1	Screw–HH
7	3256–2	2	Washer–Flat
8	32128–20	2	Nut–HF
9	1–523415	1	Spring–Switch, Seat
10	1–522424–03	1	Mount–Spring, Seat
11	321–4	6	Screw–HH
12	32128–33	6	Nut–HF
13	63–8360	2	Key–Ignition
14	1–513152	1	Switch–Closed, Normally
15	1–513180	1	Plate–Switch, Seat
16	3290–500	14	Screw–PPH
17	1–633181	4	Plate–Tapped
18	1–816001	2	Fuse–Type, Blade
19	1–633111	1	Switch
20	1–513051	2	Switch–Open, Normally
21	1–303287	5	Tie–Plastic
22	100–6186	1	Module–Delay, Seat

Ref. No.	Part No.	Qty.	Description
23	88–9830	1	Key Switch ASM
23:1	3254–5	1	Washer–Tooth
23:2	218–461	1	Nut–HH
24	1–513374	1	Meter–Hour
25	1–633673	1	Switch–Delta
26	1–633396	3	Clip–Loom
27	100–4340	1	Harness–Wire
28	1–303335	2	Tie–Plastic
29	1–523281	1	Wire–Starter
30	1–543393	1	Insulator–Solenoid
31	1–633651	2	Bolt–Holddown
32	1–644427	1	Tilt Switch ASM
32:2	1–643401	1	Decal–Switch, Mercury
33	3296–2	6	Nut–Lock
34	1–643275	2	Relay
37	3256–22	1	Washer–Flat

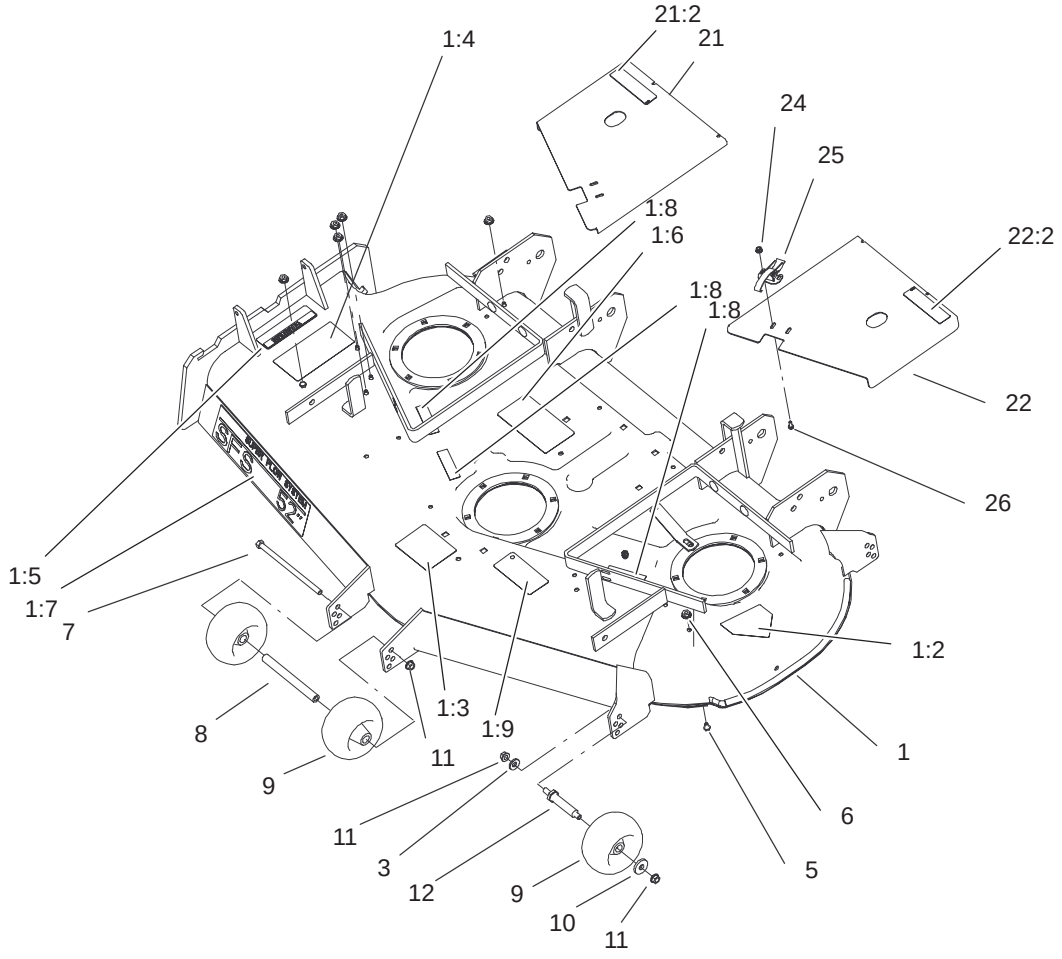

Sheet No.: 51

Deck and Wheel Gage Assembly

Ref. No.	Part No.	Qty.	Description
1	106–5879	1	Deck ASM
*2	3230–18	12	Screw–CARR
3	98–5975	3	Washer–Belleville
5	321–1	6	Screw–HH
6	32128–33	6	Nut–HF
7	323–28	1	Screw–HH
8	98–5967	1	Spacer
9	68–2730	5	Wheel–Gage
10	1–373034	3	Washer
11	3290–357	7	Nut–HHF
12	99–2842	3	Spacer
21	98–5963	1	RH Cover ASM
21:2	67–5360	1	Decal–Danger
22	98–5965	1	LH Cover ASM
22:2	67–5360	1	Decal–Danger
24	32128–17	4	Nut–Lock, Flange
25	249–21	2	Clamp–Slotted
26	3290–321	4	Screw–HWH

Ref. No.	Part No.	Qty.	Description

* Not illustrated

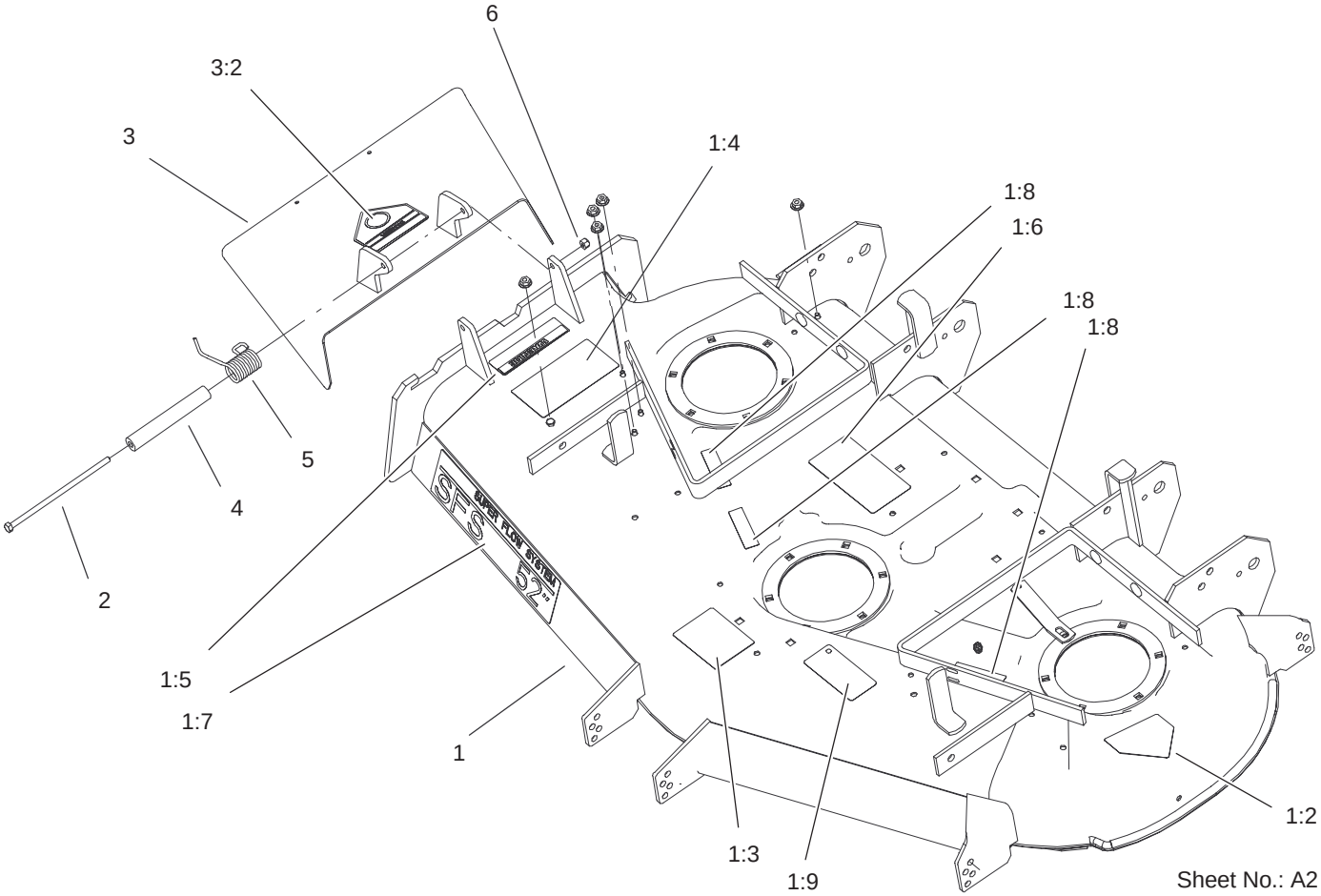

Sheet No.: A2

Deck Assembly No. 106–5879

Ref. No.	Part No.	Qty.	Description
☆1		1	Deck ASM
1:2	43–8480	1	Decal–Danger
1:3	98–3798	1	Decal–Wheel, Gage
1:4	66–1340	1	Decal–Danger
1:5	104–8569	1	Decal–Warning
1:6	98–3799	1	Decal–Belt Routing
1:7	98–5953	1	Decal–Sfs
1:8	98–5954	3	Decal–Missing, Cover
1:9	93–7818	1	Decal–Torque, Blade Bolt
2	322–50	1	Screw–HH
3	105–4623	1	Deflector ASM
3:2	93–1122	1	Decal–Danger
4	105–4622	1	Spacer
5	104–8554	1	Spring–Torsion
6	3296–29	1	Nut–Lock, NI

Ref. No.	Part No.	Qty.	Description

☆ Not serviced separately

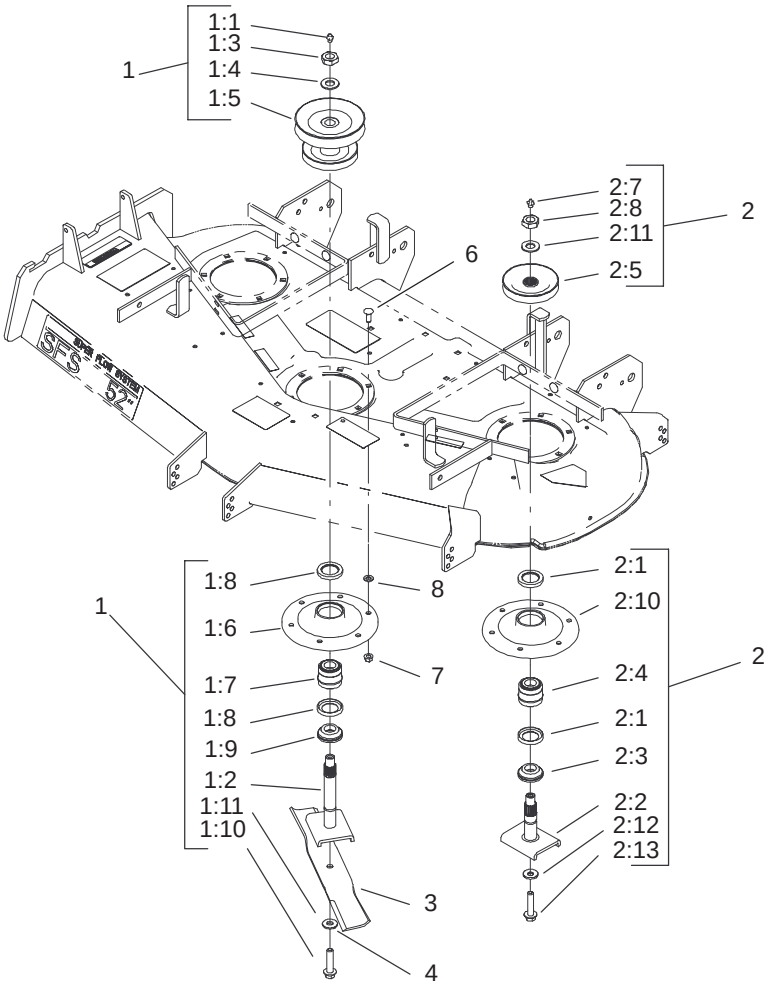

Sheet No.: 52

Spindle and Pulley Assembly

Ref. No.	Part No.	Qty.	Description
1	105–1687	1	Spindle Housing ASM
1:1	302–2	1	Fitting–Grease
1:2	105–1686	1	Spindle Shaft ASM
1:3	32146–20	1	Nut–Jam
1:4	92–5836	1	Washer
1:5	100–2312	1	Pulley/Hub ASM
1:6	61–4160	1	Housing
1:7	46–8530	1	Bearing ASM
1:8	253–139	2	Seal–Oil
1:9	27–0950	1	Spacer
1:10	92–5816	1	Bolt–Blade
2	99–4639	2	Outer Spindle ASM
2:1	253–139	2	Seal–Oil
2:2	27–0920	1	Shaft
2:3	27–0950	1	Spacer
2:4	46–8530	1	Bearing ASM
2:5	99–4613	1	Pulley ASM
2:7	302–2	1	Fitting–Grease
2:8	32146–20	1	Nut–Jam
2:10	61–4160	1	Housing
2:11	7–4150	1	Washer
2:12	1–513435	1	Washer–Spring
2:13	92–5816	1	Bolt–Blade
3	27–0990	3	Blade
6	3231–22	16	Screw–CARR

Ref. No.	Part No.	Qty.	Description
7	32128–21	16	Nut–HF
8	3256–24	1	Washer–Flat

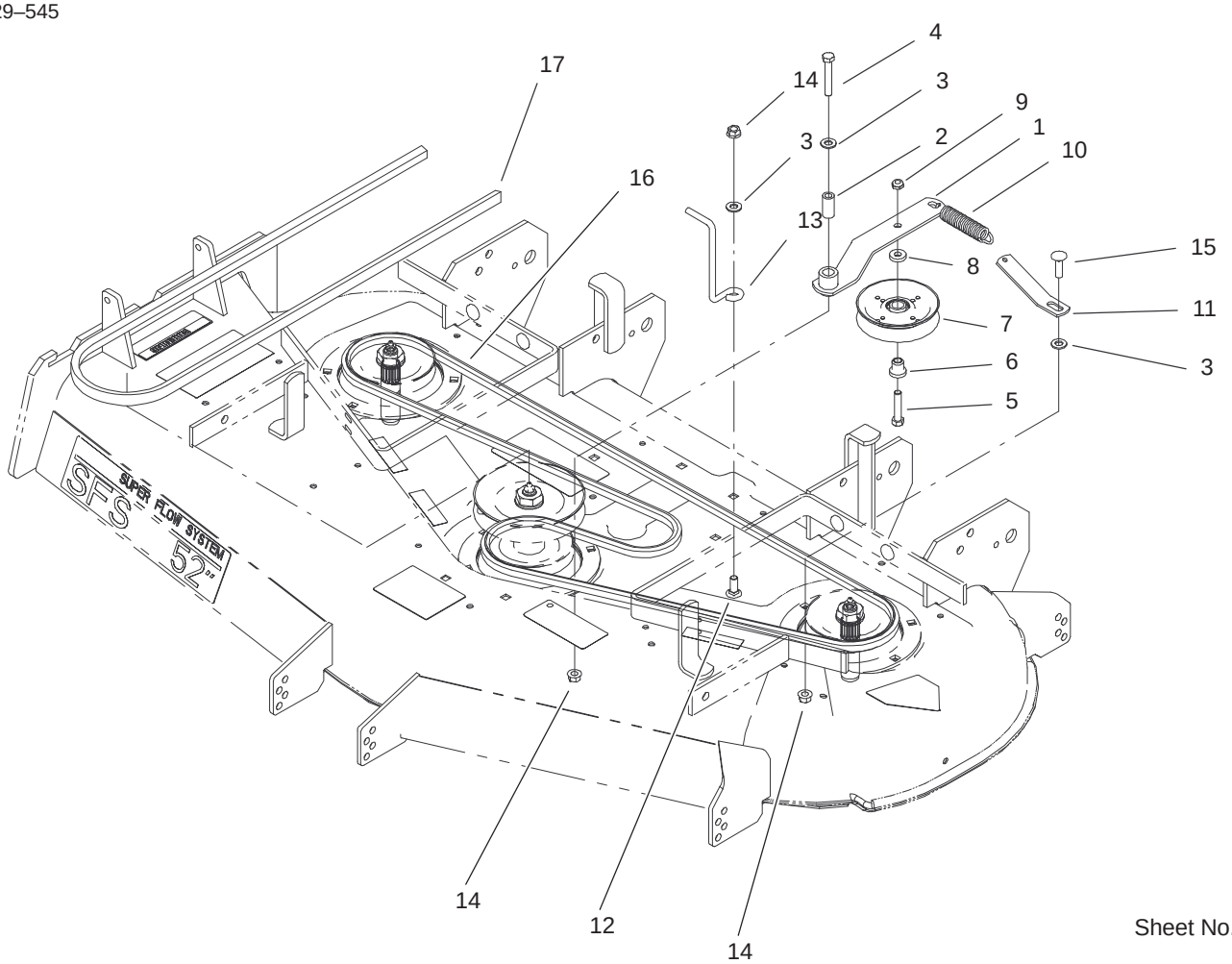

Sheet No.: 53

Belt and Idler Arm Assembly

Ref. No.	Part No.	Qty.	Description
1	55–7640–03	1	Idler Arm ASM
2	51–3640	1	Sleeve
3	3256–24	3	Washer–Flat
4	323–11	1	Screw–HH
5	3211–8	1	Screw–HH
6	65–5950	1	Bushing–Pulley
7	65–5940	1	Pulley–Idler
8	7–0081	1	Washer–Flat
9	3296–5	1	Nut–Lock, NI
10	51–3650	1	Spring–Extension
11	55–7650	1	Plate–Spring
12	3231–22	1	Screw–CARR
13	98–5980	1	Guide–Belt
14	32128–21	3	Nut–HF
15	3231–28	1	Screw–CARR
16	27–1160	1	V–Belt
17	100–2314	1	Belt

Ref. No.	Part No.	Qty.	Description

Electrical Schematic

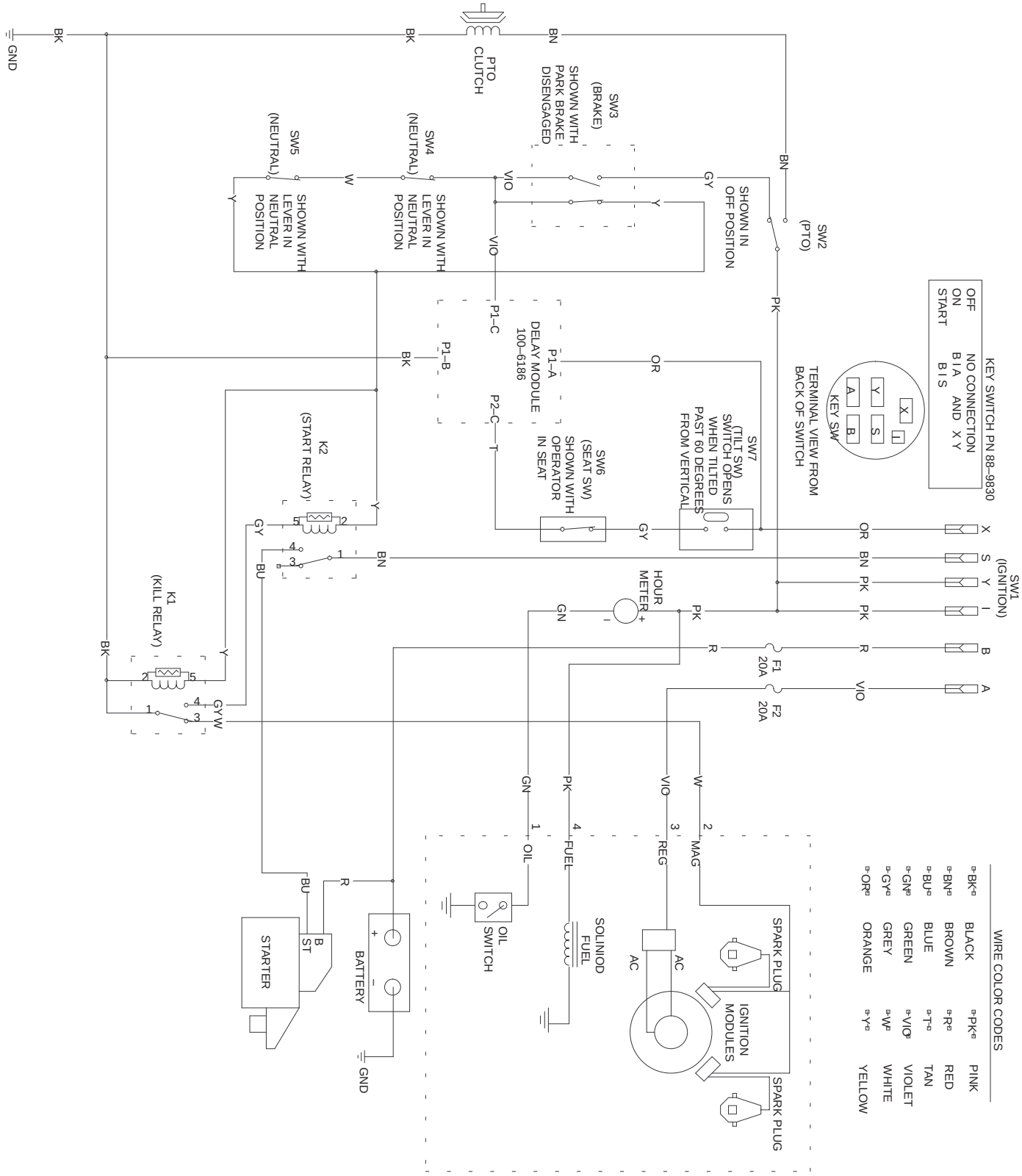

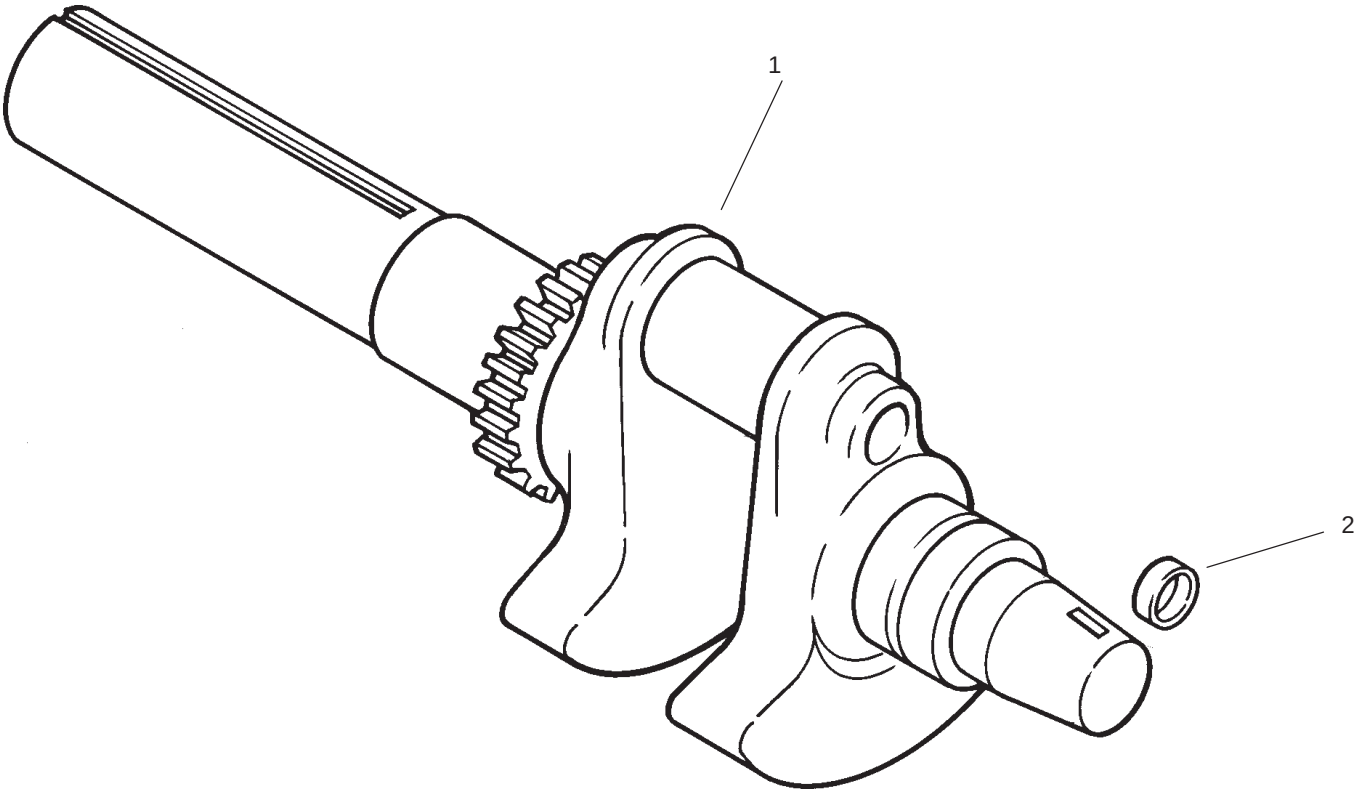

Group 1 – Crankshaft Assembly
Kohler CH20S–64684

Ref. No.	Part No.	Qty.	Description
1	24 014 84–S	1	Crankshaft (Includes 2)
2	52 139 09–S	1	Plug, cup

Ref. No.	Part No.	Qty.	Description

Obtain Parts from Kohler

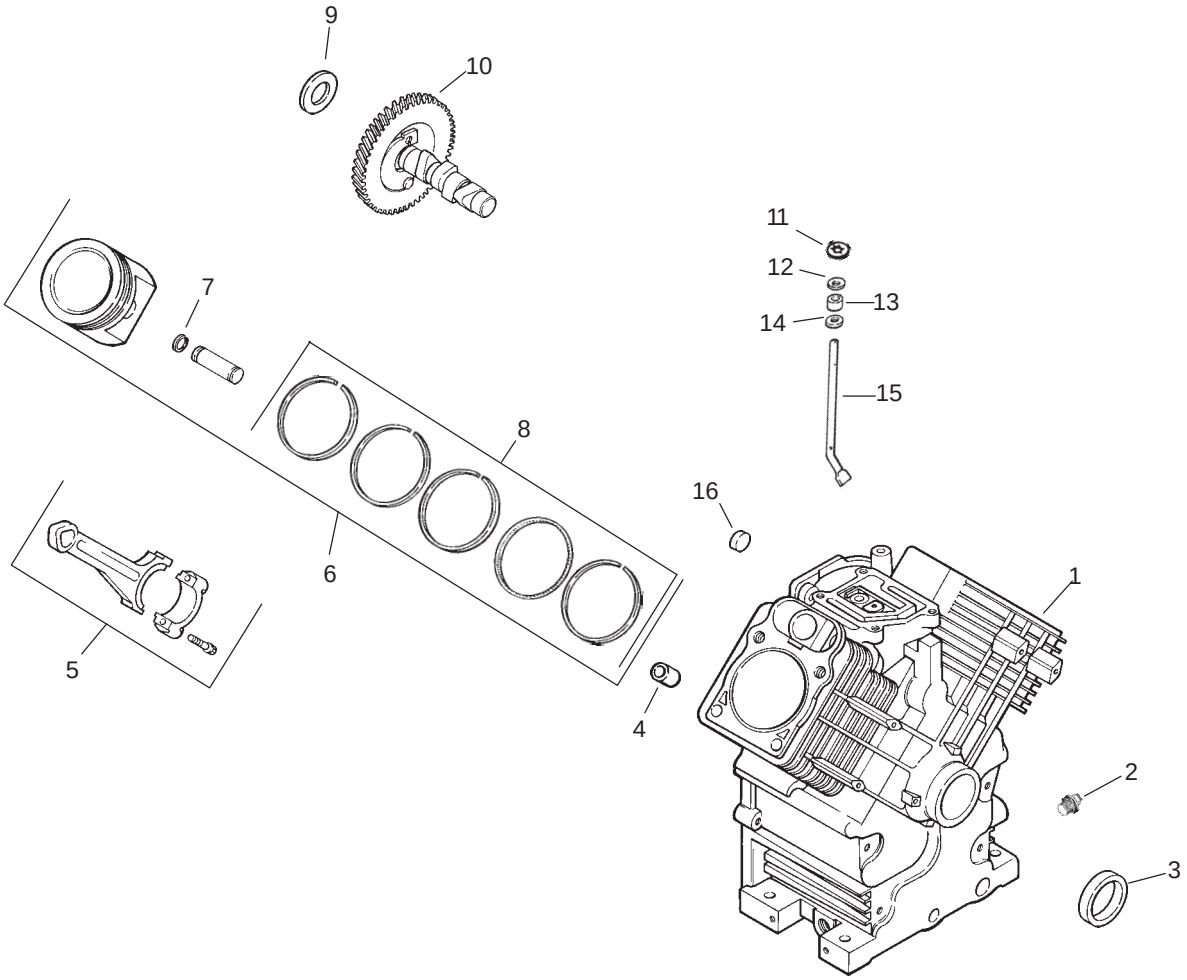

Group 2 – Crankscase Assembly
Kohler CH20S–64684

Ref. No.	Part No.	Qty.	Description
1		1	Crankcase (USE: Miniblock 24 782 15)
2	25 139 57–S	2	Plug, square hd. 3/8” N.P.T.F
3	24 032 01–S	1	Seal, front oil
4	24 380 13–S	6	Pin, locating
5	24 067 13–S	2	Connecting Rod (Std.)
	24 067 14–S	2	Connecting Rod (.25)
6	24 874 17–S	2	Piston w/Ring Set (Std.) (Includes 7, 8)
	24 874 14–S	2	Piston w/Ring Set (.08)
	24 874 18–S	2	Piston w/Ring Set (.25)
	24 874 19–S	2	Piston w/Ring Set (.50)
7	24 018 01–S	4	Retainer, piston pin
8	24 108 11–S	2	Ring Set (Std. & .08)
	24 108 12–S	2	Ring Set (.25)
	24 108 13–S	2	Ring Set (.50)
9	12 422 09–S	A.R.	Shim, camshaft – red
	12 422 13–S	A.R.	Shim, camshaft– black
	12 422 07–S	A.R.	Shim, camshaft – white
	12 422 08–S	A.R.	Shim, camshaft – blue
	12 422 10–S	1	Shim, camshaft – yellow

Ref. No.	Part No.	Qty.	Description
	12 422 11–S	A.R.	Shim, camshaft – green
	12 422 12–S	A.R.	Shim, camshaft – gray
10	24 012 10–S	1	Camshaft
11	24 018 09–S	1	Retainer, ring
12	M–931010–S	1	Washer, nylon (top)
13	28 032 09–S	1	Seal, governor cross shaft
14	24 468 15–S	1	Washer (bottom)
15	24 144 38–S	1	Shaft, governor cross
16	52 139 09–S	1	Plug, cup

Obtain Parts from Kohler

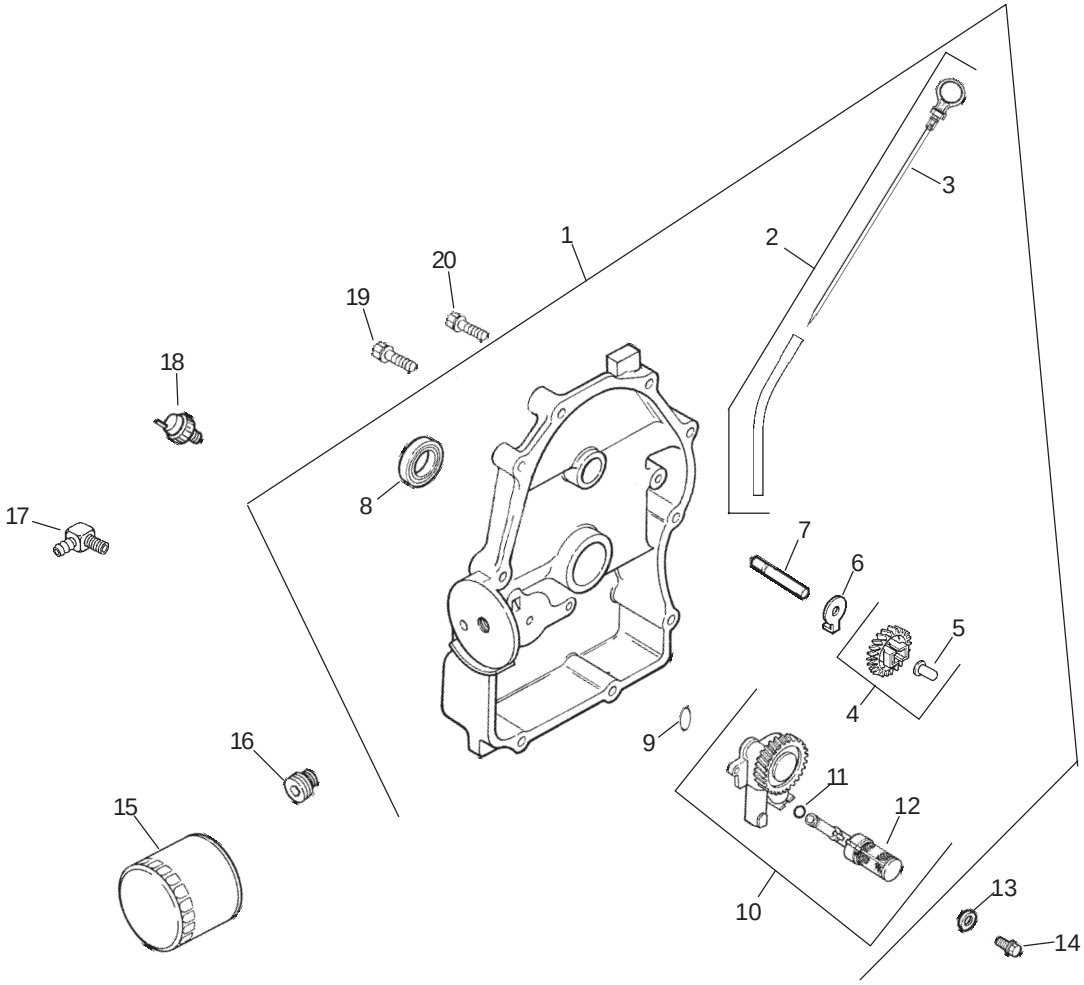

Group 3 – Oil Pan/Lubrication Assembly
Kohler CH20S–64684

Ref. No.	Part No.	Qty.	Description
1	24 009 83–S	1	Kit, closure plate (Includes 2–12,19,20)
2	24 755 121–S	1	Kit, dipstick & tube (Includes 3)
3	24 038 10–S	1	Dipstick
4	24 043 12–S	1	Kit, governor gear w/pin (Includes 5)
5	12 380 01–S	1	Pin, governor regulating
6	52 448 02–S	1	Tab, locking
7	12 144 02–S	1	Shaft, governor gear
8	52 032 08–S	1	Seal, oil (PTO end)
9	24 153 08–S	1	O–Ring
10	24 393 10–S	1	Oil pump assembly (Includes 11,12)
11	24 153 01–S	1	O–Ring, oil pick–up
12	24 381 04–S	1	Pick–up, oil
13	M–631005–S	2	Washer, plain 6 mm
14	M–645025–S	2	Screw, hex. flange M6x1.0x25
15	52 050 02–S	1	Filter, oil
16	24 136 01–S	1	Nipple, oil filter
17	25 155 02–S	1	Connector, hose 45(
18	24 099 03–S	1	Switch, oil pressure

Ref. No.	Part No.	Qty.	Description
19	24 086 16–S	9	Screw, hex. flange M8x1.25x45
20	24 086 17–S	1	Screw, hex. flange M8x1.25x45

Obtain Parts from Kohler

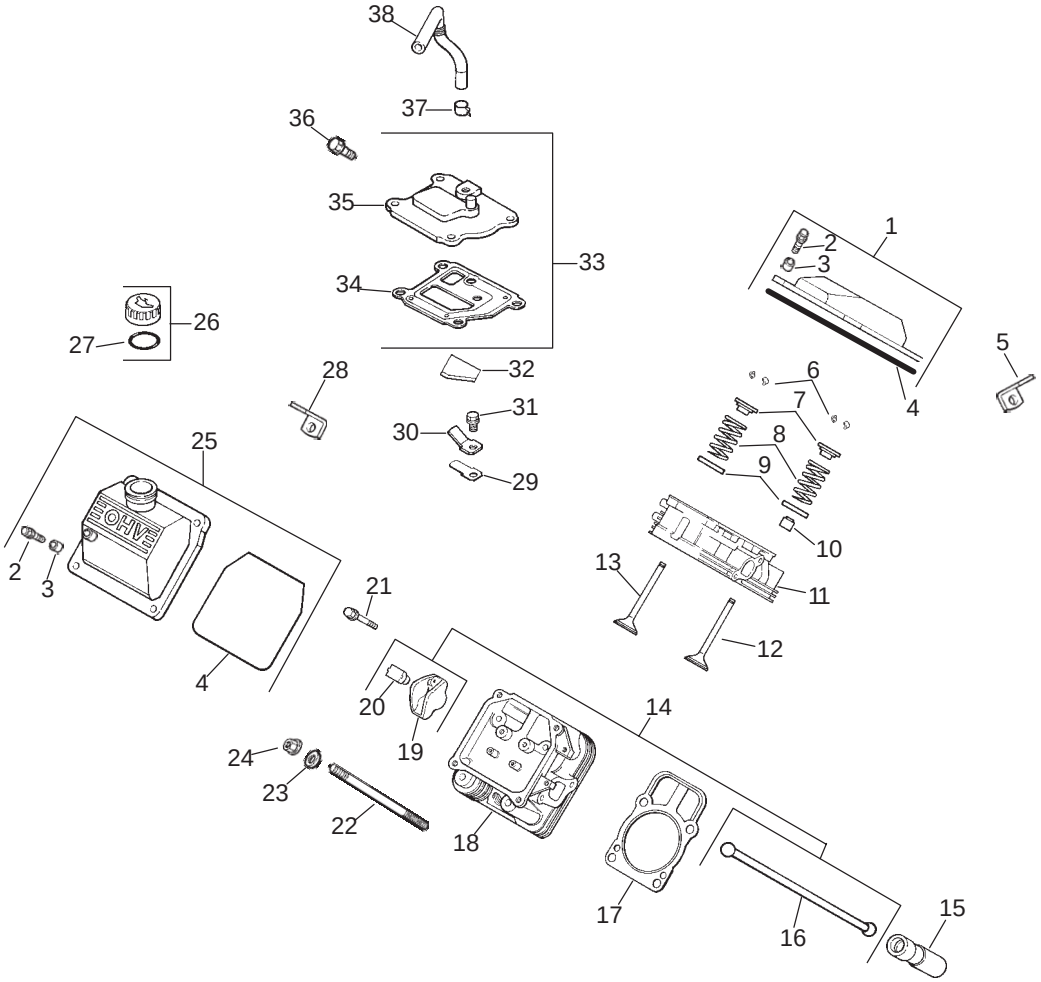

Group 4 – Head/Valve/Breather Assembly Kohler CH20S–64684

Ref. No.	Part No.	Qty.	Description
1	24 755 74–S	1	Kit, valve cover – plain (Includes 2–4)
2	M–651030–S	4	Screw, hex. flange M6x1.0x30
3	24 112 08–S	4	Spacer
4	24 153 23–S	1	O–Ring, valve cover
5	12 445 05–S	1	Strap, lifting
6	12 755 03–S	4	Kit, retainer
7	12 173 01–S	4	Cap, valve spring
8	24 089 02–S	4	Spring, valve
9	235011–S	4	Retainer, spring
10	66 032 05–S	2	Seal, valve stem
11	24 318 68–S	1	Head assembly, #1 cylinder
12	24 017 01–S	2	Valve, intake (Std.)
	24 017 02–S	2	Valve, intake (.25)
13	24 016 01–S	2	Valve, exhaust (Std.)
	24 016 02–S	2	Valve, exhaust (.25)
14	24 755 66–S	1	Kit, valve train (Includes 16,19,20)
15	25 351 01–S	4	Lifter, valve
16	24 411 05–S	4	Rod, push
17	24 041 08–S	2	Gasket, cylinder head

Ref. No.	Part No.	Qty.	Description
18	24 318 71–S	1	Head assembly, #2 cylinder
19	25 186 01–S	4	Arm, rocker
20	24 599 01–S	4	Pivot, rocker arm
21	M–640034–S	4	Screw, hex. flange M6x1.0x34
22	24 072 09–S	8	Stud, cylinder head M8x1.25x20, M10x1.5x33, 105 mm long
23	24 468 16–S	8	Washer, flat 8 mm
24	24 100 10–S	8	Nut, hex. flange M8x1.25
25	24 755 75–S	1	Kit, valve cover – oil fill (Includes 2–4)
26	25 755 13–S	1	Kit, oil fill cap (Includes 27)
27	25 153 02–S	1	O–Ring
28	24 445 01–S	1	Strap, lifting
29	24 402 03–S	1	Reed, breather
30	12 018 01–S	1	Retainer, breather reed
31	M–545010–S	1	Screw, hex. flange M5x0.8x10
32	24 050 01–S	1	Filter, breather

Obtain Parts from Kohler

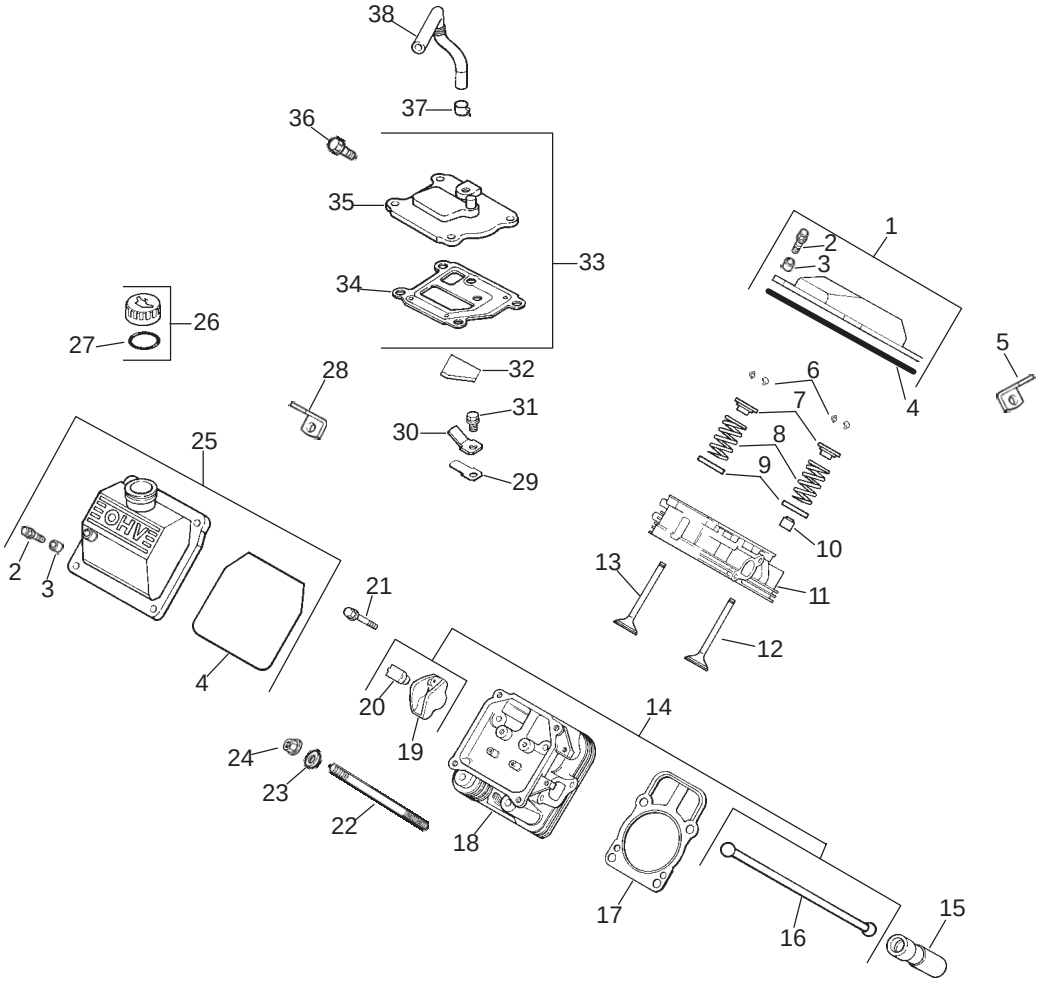

Group 4 – Head/Valve/Breather Assembly (Continued)
Kohler CH20S–64684

Ref. No.	Part No.	Qty.	Description
32	24 050 01–S	1	Filter, breather
33	24 033 01–S	1	Kit, breather (Includes 34,35)
34	24 041 23–S	1	Gasket, breather
35	24 096 86–S	1	Cover, breather
36	M–645020–S	4	Screw, hex. flange M6x1.0x20
37	25 237 08–S	2	Clamp, breather
38	24 326 31–S	1	Hose, breather

Ref. No.	Part No.	Qty.	Description

Obtain Parts from Kohler

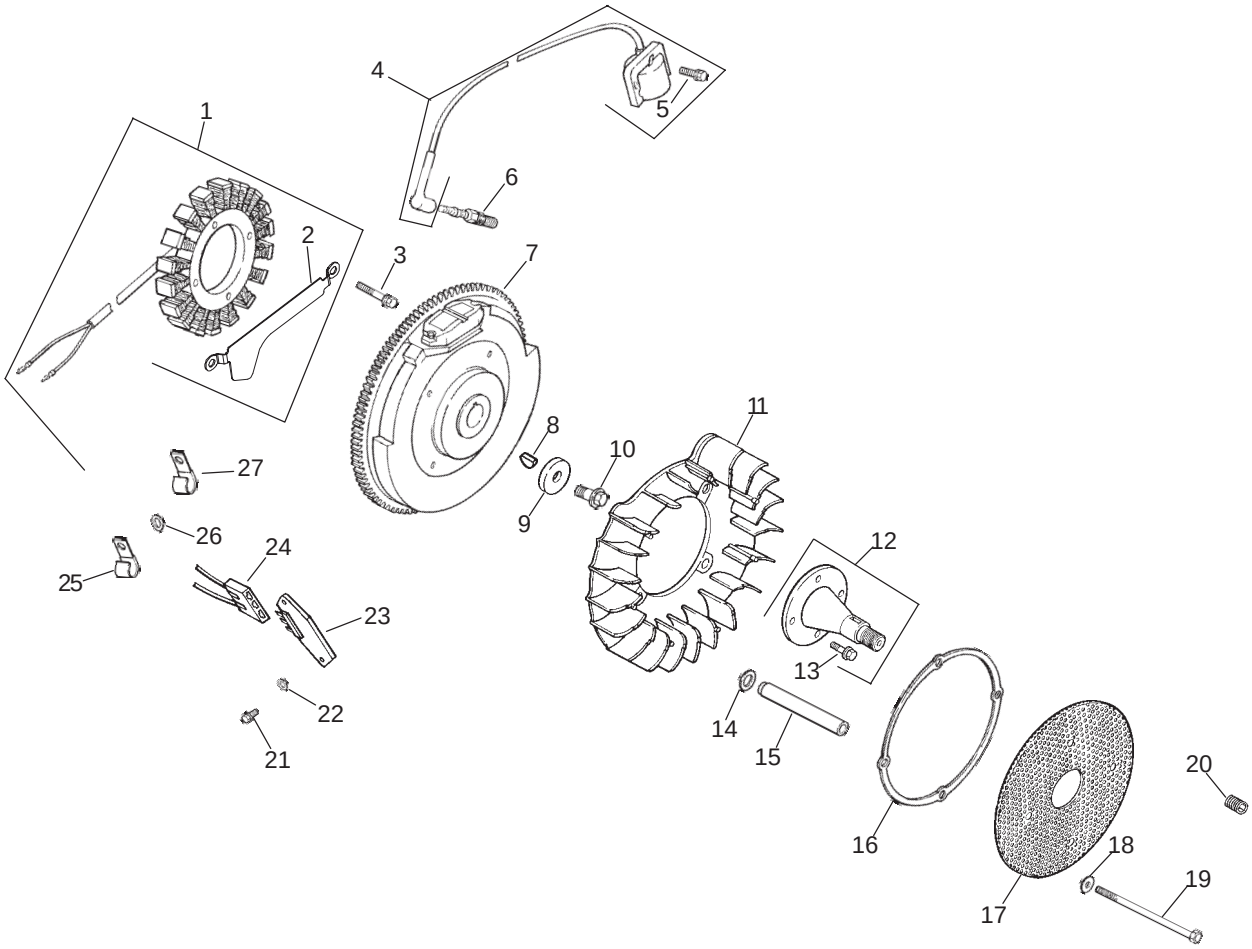

Group 5 – Ignition/Electrical Assembly
Kohler CH20S–64684

Ref. No.	Part No.	Qty.	Description
1	54 755 09–S	1	Kit, 15 amp stator (Includes 2)
2	24 126 71–S	1	Bracket, stator wire
3	M–548025–S	2	Screw, hex. cap M5x0.8x25
4	24 584 25–S	2	Kit, ignition module (Includes 5)
5	M–561025–S	4	Screw, hex. flange M5x0.8x25
6	12 132 06–S	2	Spark Plug
7	24 025 01–S	1	Flywheel
8	X–42–15–S	1	Key
9	12 468 03–S	1	Washer, plain 3/8”
10	12 086 14–S	1	Screw, hex. flange M10x1.5x46
11	24 157 01–S	1	Fan
12	24 755 08–S	1	Kit, front drive shaft (Includes 13)
13	M–839025–S	4	Screw, hex. flange M8x1.25x25
14	24 468 11–S	4	Washer, spring 10 mm
15	24 112 14–S	4	Spacer
16	24 141 06–S	1	Ring, support
17	24 162 22–S	1	Screen, grass

Ref. No.	Part No.	Qty.	Description
18	X–25–53–S	4	Washer, plain 1/4”
19	M–603100–S	4	Screw, hex. hd. M6x1.0x100
20	25 086 43–S	1	Screw, set
21	24 086 18–S	2	Screw, phillips hd. 11–16x7/8”
22	X–25–92–S	2	Washer, plain 3/16”
23	25 403 03–S	1	Rectifier–regulator 15 amp
24	236602–S	1	Connector 3 contact
25	235173–S	1	Clip, cable
26	X–25–63–S	1	Washer, plain 1/4”
27	48 154 02–S	1	Clip, cable
*	24 518 12–S	1	Lead, black, (5” – 12 gauge – insulated grip barrel eyelet terminals)
*	24 176 109–S	1	Harness, wiring
*	25 454 03–S	2	Tie, cable
*	X–22–11–S	1	Washer, lock (used to ground rectifier–regulator)

Obtain Parts from Kohler

* Not Illustrated

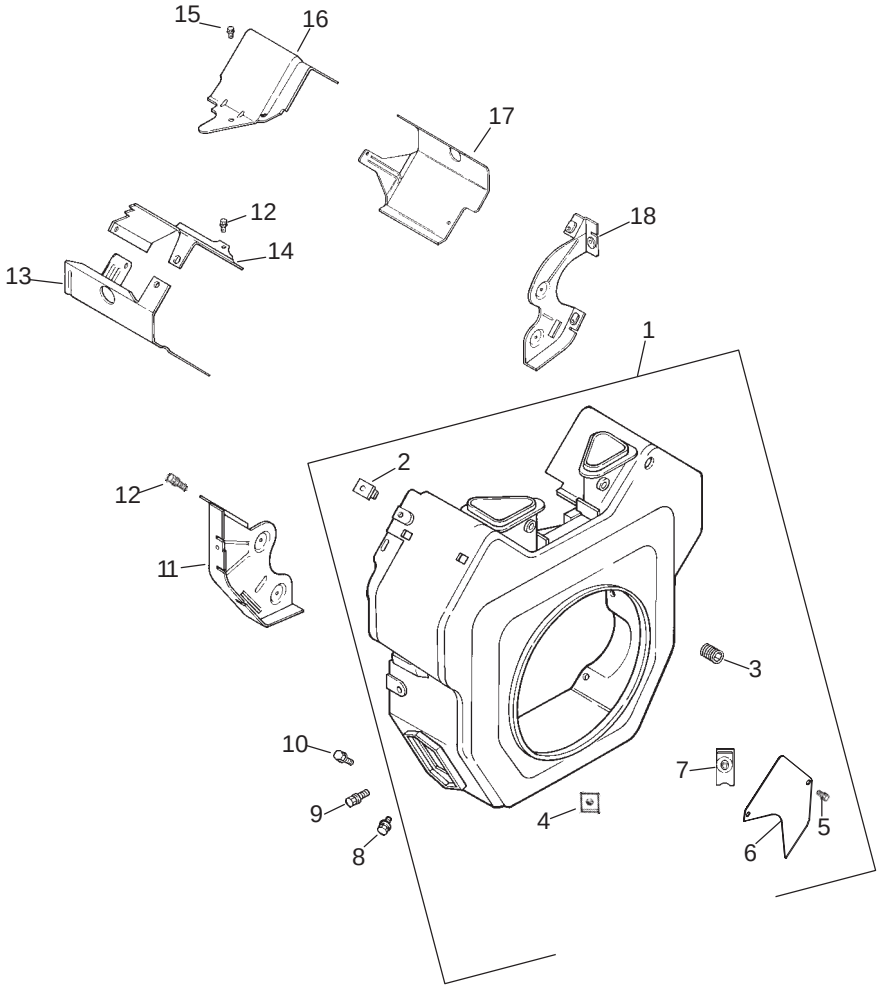

Group 6 – Blower Housing Assembly
Kohler CH20S–64684

Ref. No.	Part No.	Qty.	Description
1	54 027 93–S	1	Housing, blower assembly (Includes 2–7)
2	24 100 01–S	2	Nut, plastic
3	25 086 43–S	1	Screw, set
4	24 100 02–S	2	Nut, plastic (2)
5	M–645016–S	4	Screw, hex. flange M6x1.0x16
6	24 096 64–S	2	Cover, access panel
7	25 154 02–S	4	Clip, mounting
8	M–551016–S	1	Screw, hex. flange M5x0.8x16
9	M–545016–S	3	Screw, hex. flange M5x0.8x16
10	M–545020–S	4	Screw, hex. flange M5x0.8x20
11	24 146 16–S	1	Plate, backing – #2 side
12	M–645016–S	6	Screw, hex. flange M6x1.0x16
13	24 063 20–S	1	Baffle, cylinder barrel – #2 side
14	24 063 17–S	1	Baffle, valley – #2 side

Ref. No.	Part No.	Qty.	Description
15	M–545010–S	2	Screw, hex. flange M5x0.8x10
16	24 063 59–S	1	Baffle, valley – #1 side
17	24 063 58–S	1	Baffle, cylinder barrel – #1 side
18	24 146 20–S	1	Plate, backing – #1 side
*	24 113 114–S	1	Decal, 20 HP

Obtain Parts from Kohler

* Not Illustrated

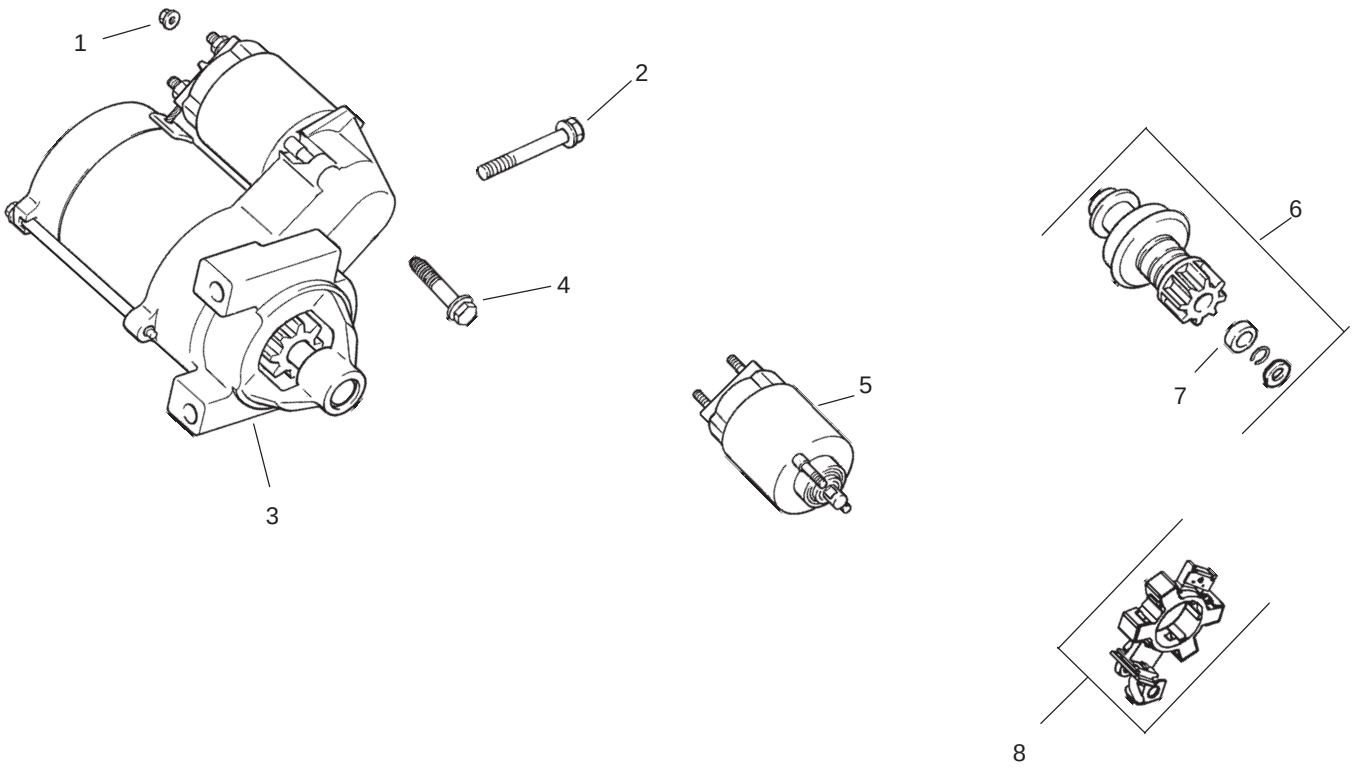

Group 7 – Starter Assembly
Kohler CH20S–64684

Ref. No.	Part No.	Qty.	Description
1	M–841080–S	1	Nut, hex flange M8x1.25
2	M–839080–S	2	Screw, hex. flange M8x1.25x80
3	25 098 09–S	1	Starter, solenoid shift assembly (Includes 4–8)
4	25 086 113–S	3	Screw, external torx hd.
5	25 435 05–S	1	Kit, solenoid (Includes 4)
6	25 755 33–S	1	Kit, pinion drive (Includes 7)
7	25 141 05–S	1	Ring
8	25 221 01–S	1	Kit, brush

Ref. No.	Part No.	Qty.	Description

Obtain Parts from Kohler

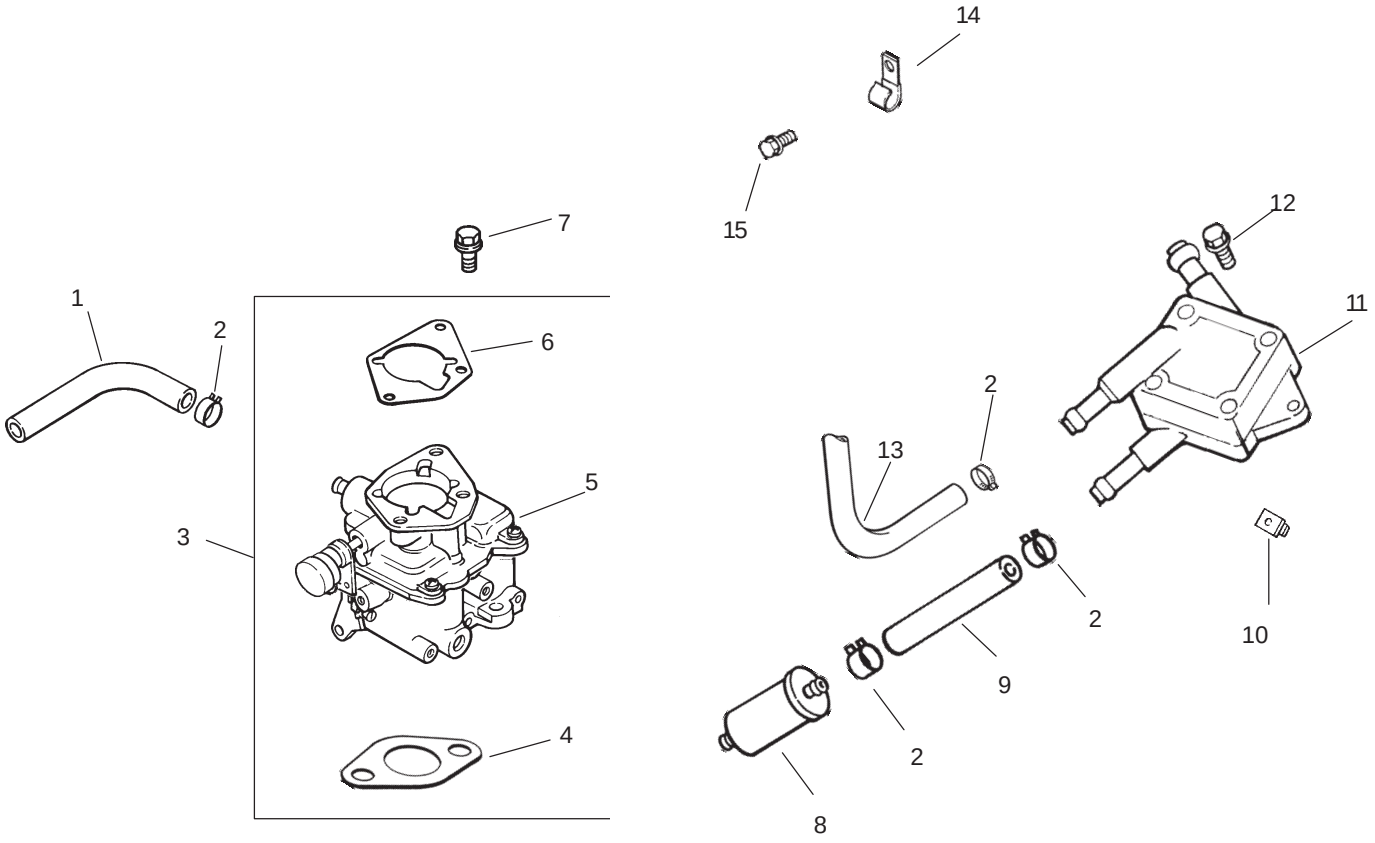

Group 8 – Fuel System Assembly
Kohler CH20S–64684

Ref. No.	Part No.	Qty.	Description
1	25 353 32–S	1	Line, fuel 9”
2	25 237 14–S	6	Clamp, hose
3	24 853 32–S	1	Kit, carburetor w/gaskets (Includes 4–6)
4	24 041 06–S	1	Gasket, air cleaner base
5	24 053 32	1	Carburetor assembly (For information only, not available separately) (Service with kits 24 757 01–S, 24 757 02–S, 24 757 03–S, 24 757 07–S, & 24 755 125–S)
6	24 041 17–S	1	Gasket, carburetor
7	M–651030–S	2	Screw, hex. flange M6x1.0x30
8	24 050 02–S	1	Filter, fuel
9	25 353 15–S	1	Line, fuel 3–1/2”
10	24 100 01–S	2	Nut, plastic
11	24 393 16–S	1	Pump, fuel – pulse

Ref. No.	Part No.	Qty.	Description
12	24 086 12–S	2	Screw, hex. cap M6x1.7x18
13	24 353 02–S	1	Line, fuel 15–1/2”
14	47 154 01–S	1	Clip, cable
15	M–650012–S	1	Screw, hex. flange M6x1.0x12
*	24 757 01–S	1	Kit, solenoid
*	24 757 02–S	1	Kit, float
*	24 757 03–S	1	Kit, carburetor repair
*	24 757 07–S	1	Kit, choke repair
*	24 755 125–S	1	Kit, high altitude w/gaskets

Obtain Parts from Kohler

* Not Illustrated

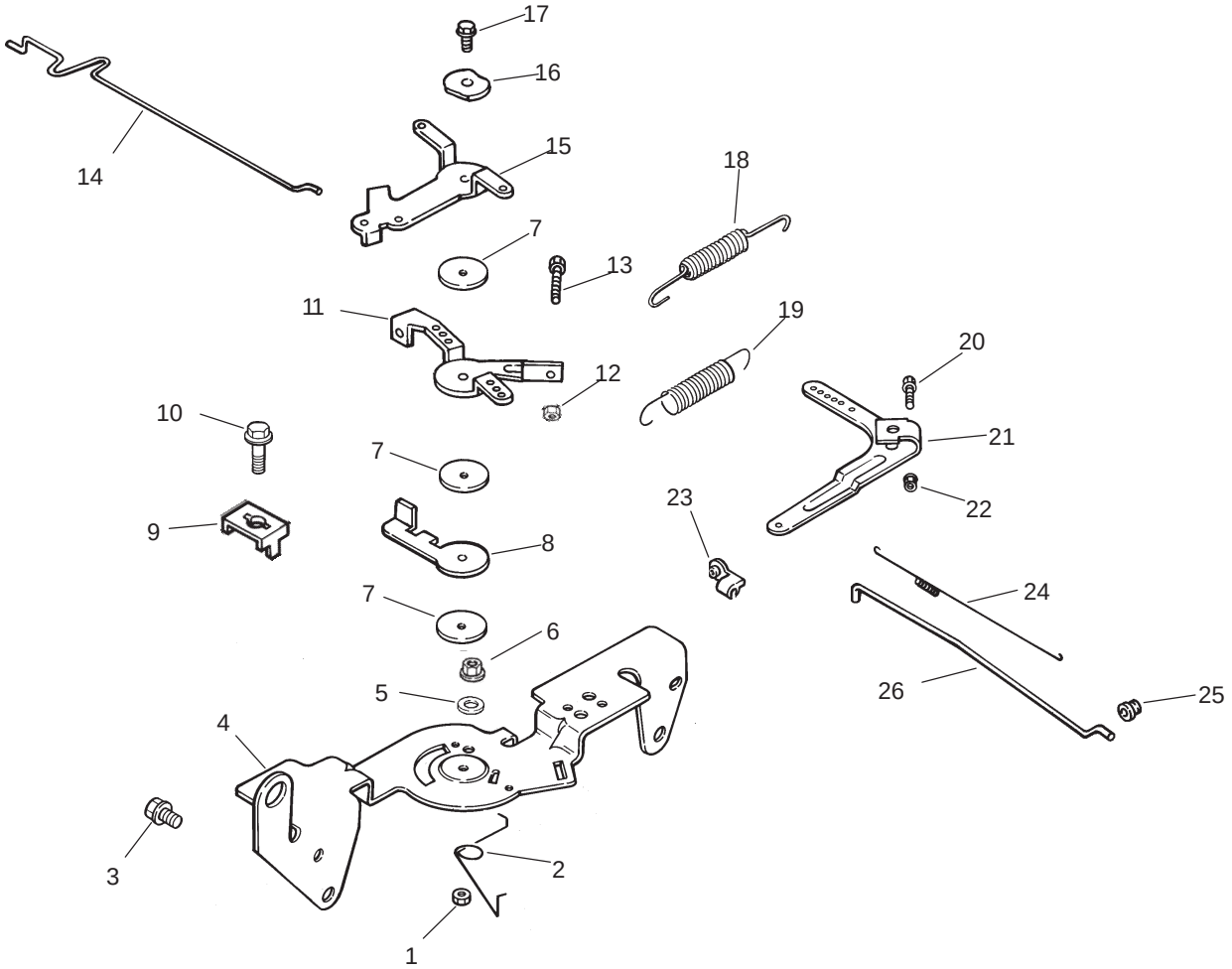

Group 9 – Engine Control Assembly
Kohler CH20S–64684

Ref. No.	Part No.	Qty.	Description
1	M–547050–S	1	Nut, hex. lock M5x0.8
2	24 089 03–S	1	Spring, choke return
3	M–645016–S	4	Screw, hex. flange M6x1.0x16
4	24 126 56–S	1	Bracket, control
5	X–20–1–S	1	Washer, lock 1/4
6	M–541050–S	1	Nut, hex. flange M5x0.8
7	24 468 01–S	3	Washer, plain 5.5 mm
8	24 090 07–S	1	Lever, throttle actuator
9	12 237 01–S	2	Clamp, cable
10	M–545016–S	3	Screw, hex. flange M5x0.8x16
11	24 090 03–S	1	Lever, throttle control
12	M–446030–S	1	Nut, hex M4x0.7
13	M–401030–S	1	Screw, hex. cap M4x0.7x30
14	24 079 21–S	1	Linkage, choke
15	24 090 05–S	1	Lever, choke
16	41 468 03–S	1	Washer, spring 1/4”
17	M–545020–S	1	Screw, hex. flange M5x0.8x20
18	24 089 51–S	1	Spring, throttle limiter
19	24 089 48–S	1	Spring, governor

Ref. No.	Part No.	Qty.	Description
20	24 211 03–S	1	Bolt round head, square neck
21	24 090 33–S	1	Lever, governor
22	M–641060–S	1	Nut, hex. flange M6x1.0
23	25 158 11–S	1	Bushing, linkage retaining
24	24 089 01–S	1	Spring, linkage
25	25 158 08–S	1	Bushing, linkage retaining
26	24 079 01–S	1	Linkage, throttle

Obtain Parts from Kohler

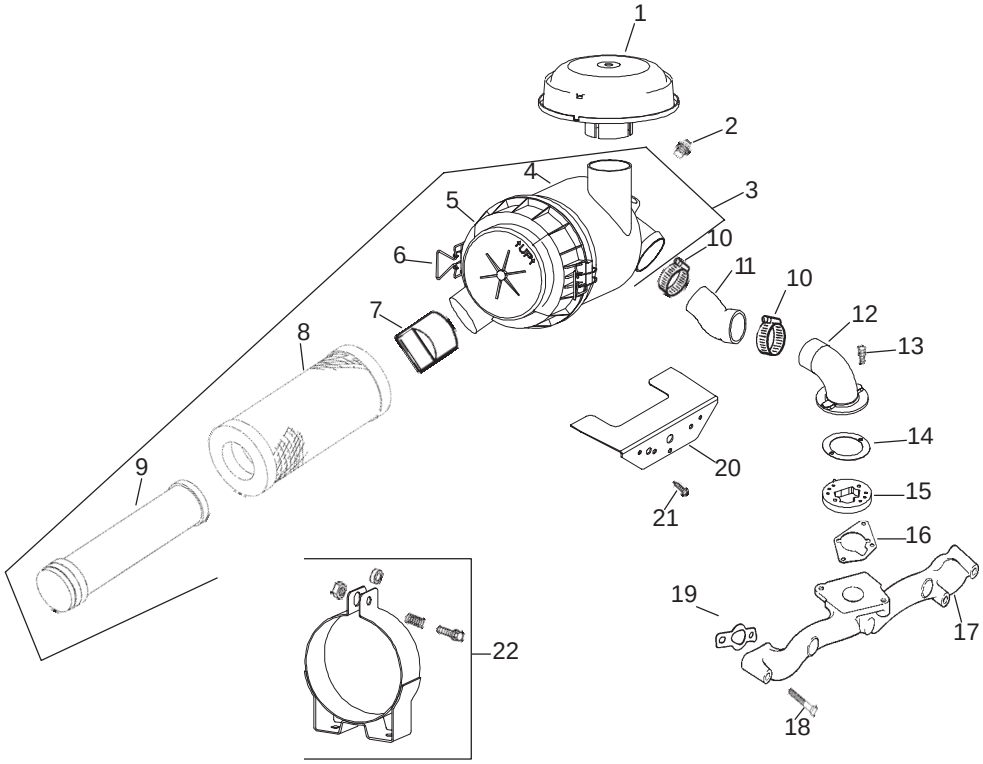

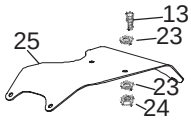

Group 10 – Air Intake/Filtration Assembly Kohler CH20S–64684

Ref. No.	Part No.	Qty.	Description
1	25 324 02–S	1	Hood, air cleaner
2	25 139 20–S	1	Plug, pipe
3	25 048 07–S	1	Cleaner, heavy duty air (Includes 4–9)
4	25 081 01–S	1	Housing, heavy duty air cleaner
5	25 096 06–S	1	Cover, heavy duty air cleaner
6	25 154 05–S	2	Clip
7	24 462 07–S	1	Valve, dust ejector
8	25 083 01–S	1	Element – primary
9	25 083 04–S	1	Element safety filter
10	25 237 07–S	2	Clamp, hose
11	24 326 32–S	1	Hose, air cleaner
12	24 029 21–S	1	Adapter, remote air cleaner
13	M–639016–S	6	Screw, hex. flange M6x1.0x16
14	24 041 34–S	1	Gasket, adapter
15	24 029 26–S	1	Adapter
16	24 041 06–S	1	Gasket, air cleaner base
17	24 164 14–S	1	Manifold, intake

Ref. No.	Part No.	Qty.	Description
18	25 086 84–S	4	Screw, hex. flange M6x1.0x55
19	24 041 01–S	2	Gasket, intake manifold
20	24 314 25–S	1	Shield, debris
21	24 086 06–S	2	Screw, phillips hd. 11–16x3/4”
22	25 126 02–S	1	Bracket, air cleaner
23	X–25–73–S	4	Washer, plain 1/4”
24	M–647060–S	2	Nut, hex. lock M6x0.8
25	24 126 98–S	1	Bracket, air cleaner
*	25 113 27–S	1	Decal, air cleaner

Obtain Parts from Kohler

* Not Illustrated

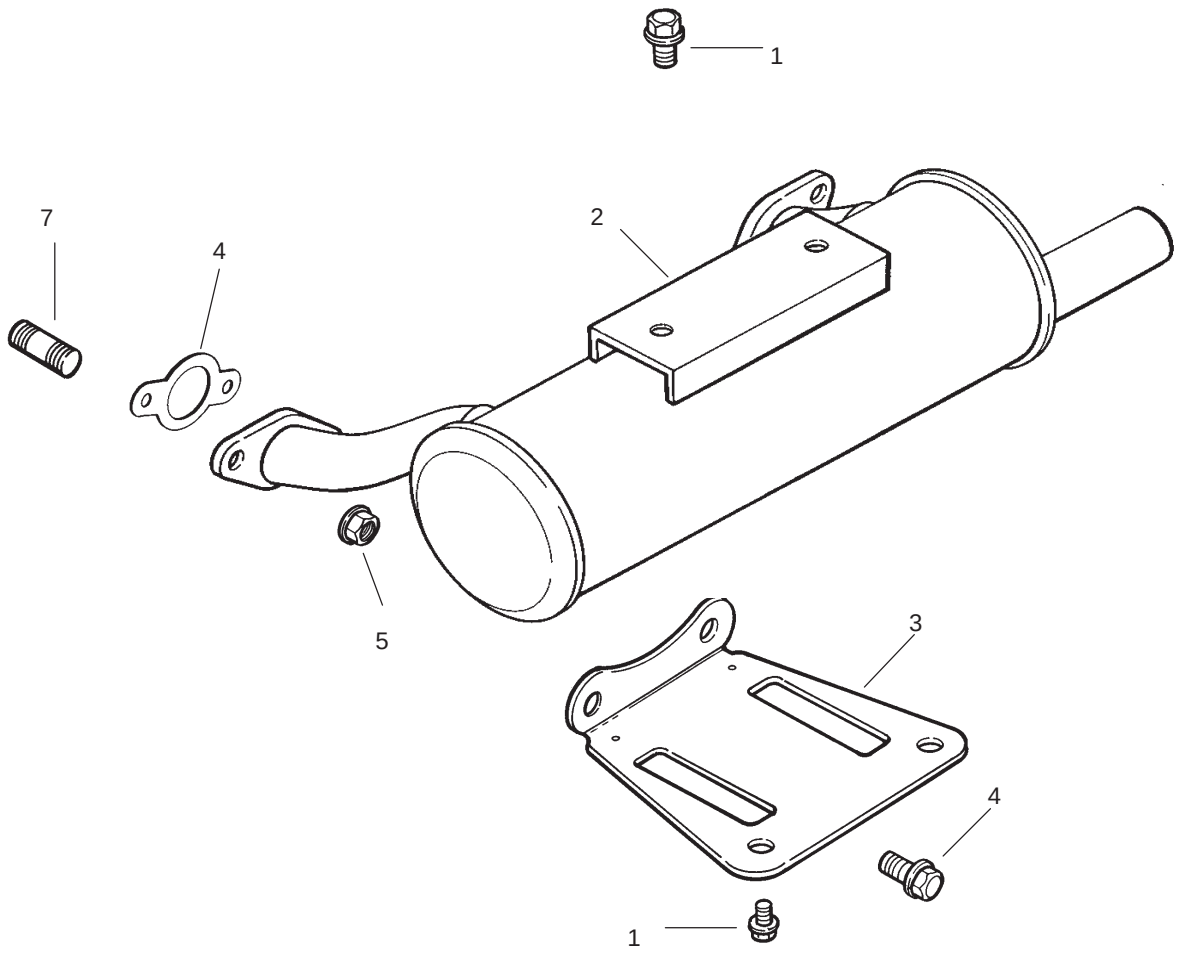

Group 11 – Exhaust Assembly
Kohler CH20S–64684

Ref. No.	Part No.	Qty.	Description
1	M–650012–S	4	Screw, hex. flange M6x1.0x12
2	24 068 18–S	1	Muffler, canister – oil filter side outlet
3	24 126 12–S	1	Bracket, muffler – low mount
4	M–839020–S	2	Screw, hex. flange M8x1.25x80
5	M–841080–S	4	Nut, hex. flange M8x1.25
6	24 041 49–S	2	Gasket, exhaust
7	25 072 04–S	4	Stud M8x1.25x33
*	24 522 167	1	Shortblock
*	24 782 15	1	Miniblock
*	24 755 107–S	1	Gasket Set

Ref. No.	Part No.	Qty.	Description

Obtain Parts from Kohler

TORO®