Form No. 3449-165 Rev C

TORO®

Count on it.

Parts Catalog

60in TITAN® MyRIDE®

Riding Mower

Model No. 75316—Serial No. 400000000 and Up

Register at www.Toro.com.
Original Instructions (EN)

3449-165 C

Ordering Replacement Parts

To order replacement parts, please supply the part number, the quantity, and the description of each part desired.

Understanding Reference Numbers

Each identified part in an illustration has a reference number. The reference number for a part also appears in the parts list, along with other information about the part.

This catalog uses two special reference number formats, one to indicate parts in a service assembly and another to indicate the quantity of a given part in an illustration.

Service Assembly Reference Numbers

Parts in service assemblies have reference numbers in the form a:b. The a represents the reference number of the entire service assembly and the b represents a sequential number unique to each part within the service assembly.

For example, a wheel assembly might be identified by reference number 6, the tire by 6:1, the valve by 6:2, and the wheel by 6:3. When you order the assembly identified by reference number 6, you receive all parts identified by reference numbers 6:1,6:2, and 6:3. However, you may also order any part individually. Reference numbers of this type appear in illustration and in parts lists.

Reference Numbers Indicating Quantity

In an illustration, if a reference number indicates more than one part, the reference number has the form nX y. The n represents the quantity of the part, the X is the multiplication symbol, and the y represents the reference number.

For example, in an illustration, the reference number 2X 37 means that two of the parts identified by reference number 37 are indicated.

Contents

Frame Assembly 4
Deck Lift Assembly 6
Fork and Caster Wheel Assembly 8
Traction Drive Assembly 10
RH Hydro Transmission Assembly No. 140-8310 12
LH Hydro Transmission Assembly No. 140-8311 14
Brake Assembly 16
Tire Assembly 18
Seat Assembly 20
Seat Assembly No. 140-2714 22
Motion Control Assembly 24
Engine and Muffler Assembly 26
Body Styling and Fuel Pod Assembly 28
Fuel Tank Assembly No. 144-5303 30
Electrical Assembly 32
60 Inch Deck Assembly 34
Frame Decal Assembly 36
Maintenance and HOC Decal Assembly 38
Clutch Assembly 40
Attachments and Accessories 42

© 2024—The Toro® Company
8111 Lyndale Avenue South
Bloomington, MN 55420

Contact us at www.Toro.com.
Printed in the USA.
All Rights Reserved

Frame Assembly

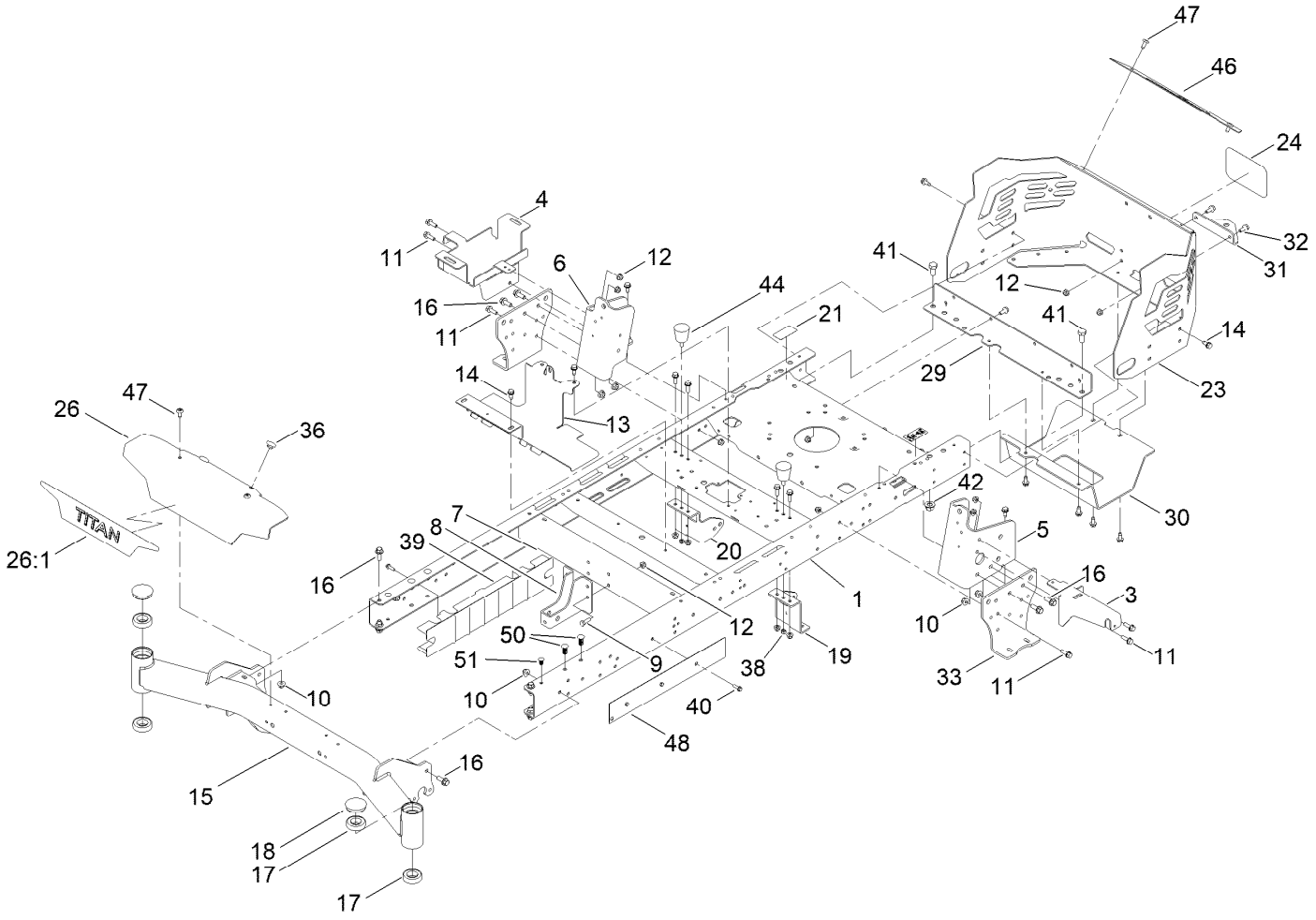

Frame Assembly (continued)

Ref.	Part Number	Qty.	Description
1	137-7023-01	1	Frame ASM
3	133-7051-03	1	Bracket-Support, Pod (LH)
4	139-3570	1	Tray-Battery
5	137-5068-01	1	Bracket-Mounting, LH
6	137-5069-01	1	Bracket-Mounting, RH
7	133-4413-01	1	Brace-Cross, Lower
8	137-7022-01	1	Bracket-Mount Damper, Lower
9	322-5	4	Screw-HH
10	104-8301	10	Nut-HF, NI
11	3234-29	20	Screw-HHF
12	104-8300	30	Nut-HF, NI
13	133-4485-03	1	Bracket-Mount
14	32144-70	20	Screw-HWHTF
15	139-5839-01	1	Front Axle ASM
16	3234-42	10	Screw-HHF
17	109-3678	4	Bearing-Ball
18	138-7200	2	Cap-Grease
19	139-3211-01	1	Mount-Hydro, Front (Left)
20	137-7020-01	1	Mount-Hydro, Front (Right)
21	121-2989	2	Decal-Bypass

Ref.	Part Number	Qty.	Description
23	140-1031-03	1	Guard-Engine
24	99-4693	1	Decal
26	140-0365-01	1	Plate-Front
26:1	139-7469	1	Decal-Titan
29	137-7016-01	1	Crossmember-Rear, Wide
30	133-4429-03	1	Guard-Muffler
31	117-1232-03	1	Bracket-Hitch
32	3234-47	6	Screw-HHF
33	133-1201-03	2	Mount-Hydro
36	135-0505	2	Bumper-Seat
38	3296-42	4	Nut-Lock, NI
39	137-5093	2	Guard-Rail
40	46-8091	6	Screw-HWH
41	325-4	2	Screw-HH
42	99-5107	2	Nut-Lock
44	132-5058	2	Bumper-Rubber
46	140-1032-01	1	Trim-Guard, Engine
47	138-9753	4	Screw
48	140-0366-01	1	Plate-Frame
50	140-2149	4	Rivet-Push
51	133-0875	2	Rivet-Push

Deck Lift Assembly

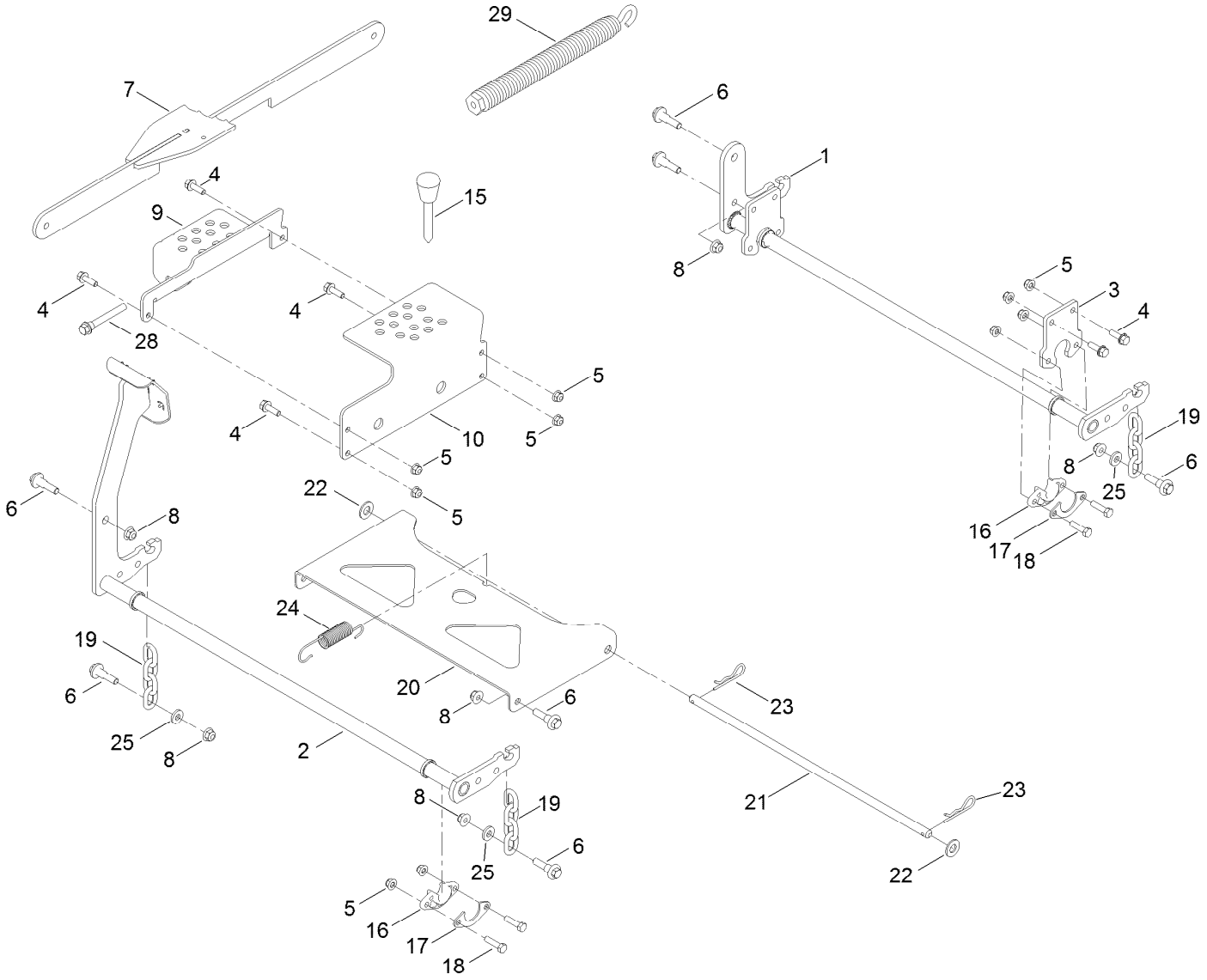

Deck Lift Assembly (continued)

Ref.	Part Number	Qty.	Description
1	137-2020-03	1	Pivot-Rear
2	133-4430-03	1	Pivot-Front
3	137-2021-03	2	Plate
4	3234-29	8	Screw-HHF
5	104-8300	16	Nut-HF, NI
6	130-0742	9	Bolt-Shoulder
7	139-3553-03	1	Lift Link ASM
8	104-8301	9	Nut-HF, NI
9	139-3557-03	1	Plate-HOC, Lower
10	139-3556-03	1	Plate-HOC, Upper
15	140-2146	1	HOC Pin ASM
16	139-5872	4	Bearing-Flange

Ref.	Part Number	Qty.	Description
17	138-7204	4	Gusset-Deck Lift
18	322-6	8	Screw-HH
19	138-7205	4	Chain-Decklift, 4-Link
20	133-4311-01	1	Pan-Pivot, Deck
21	133-7071	1	Rod-Pivot, Deck
22	3256-26	2	Washer-Flat
23	1-806005	2	Pin-Cotter
24	138-7206	1	Spring-Extension
25	138-7207	4	Spacer-Hub, Blower
28	92-7674	1	Bolt-Shoulder
29	116-0886	1	Spring-Extension

Fork and Caster Wheel Assembly

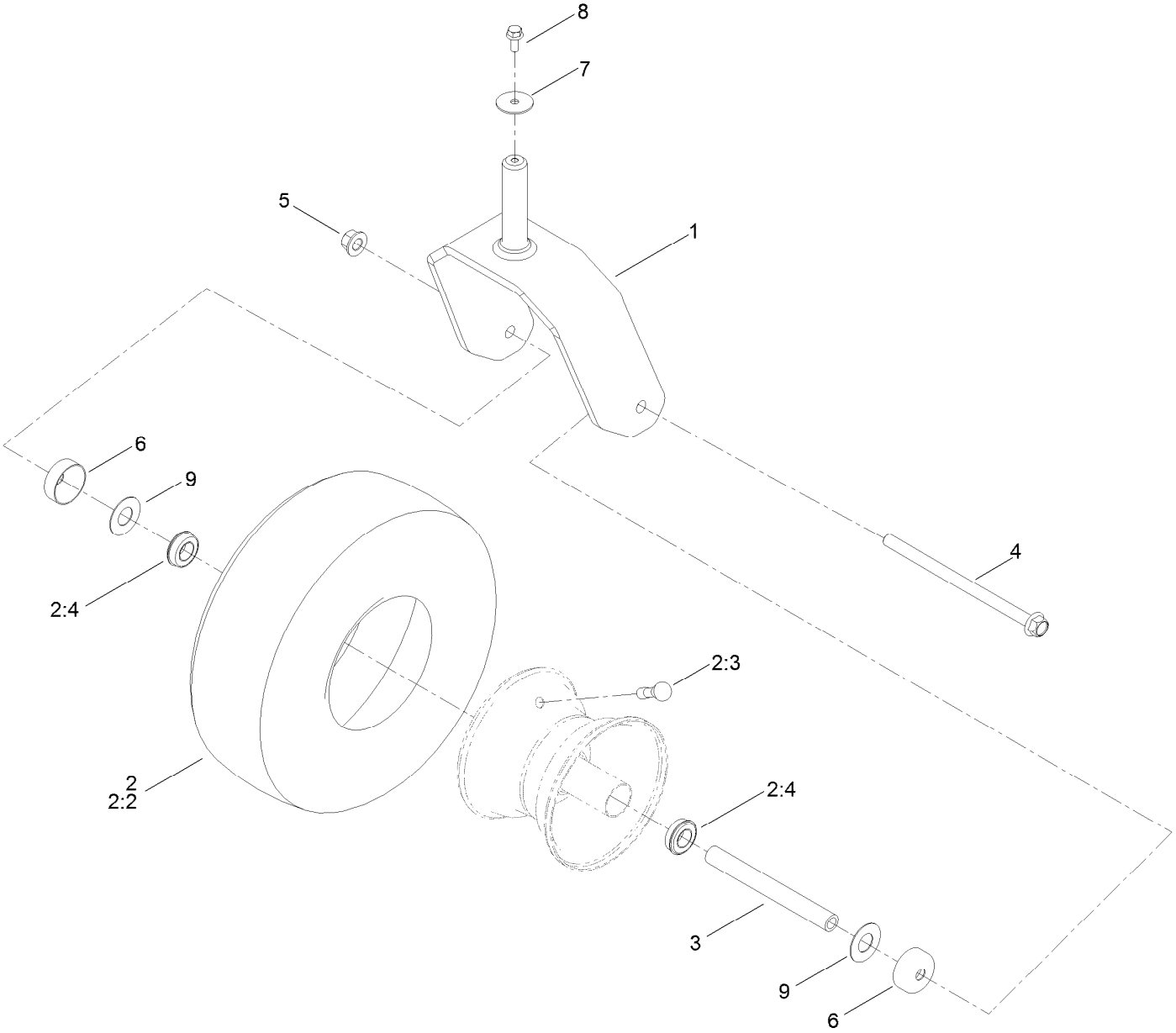

Fork and Caster Wheel Assembly (continued)

Ref.	Part Number	Qty.	Description
1	139-7537-01	2	Fork-Caster
2	139-7532	2	Tire And Wheel ASM
2:2	126-5959	1	Tire
2:3	232-27	1	Stem-Valve
2:4	136-4190	2	Bearing
3	133-4487	2	Spanner-Wheel
4	126-5389	2	Screw-HHF
5	99-5107	2	Nut-Lock
6	138-7208	4	Guard-Seal
7	3256-68	2	Washer-Flat
8	3234-47	2	Screw-HHF
9	136-5590	4	Washer

Traction Drive Assembly

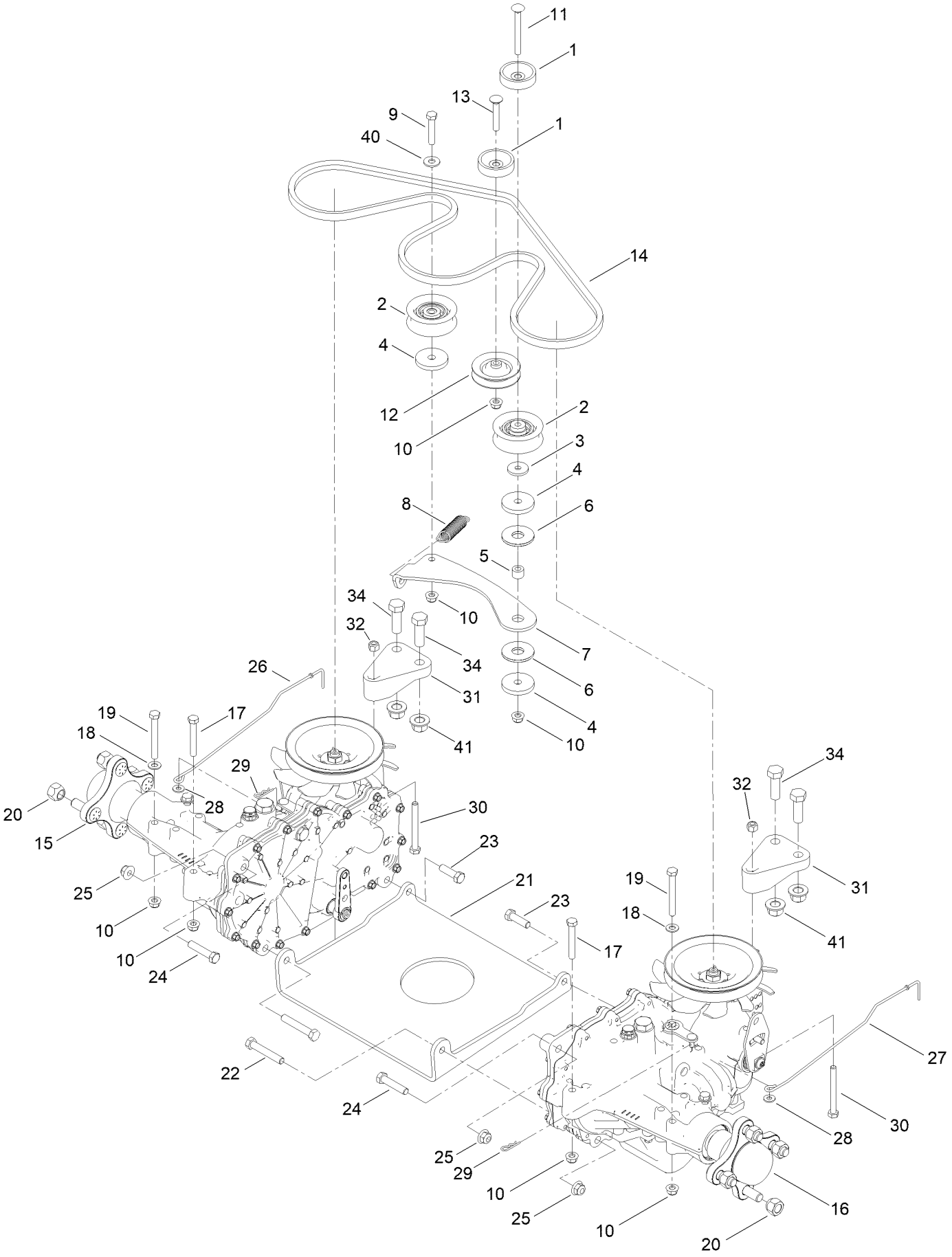

Traction Drive Assembly (continued)

Ref.	Part Number	Qty.	Description
1	119-3353	2	Spacer
2	138-7597	2	Pulley-Idler, Flat
3	1-613235	1	Washer
4	110-9981	3	Washer-Plain
5	138-7209	1	Bushing
6	114-0463	2	Washer-Friction, Composite
7	133-4423	1	Arm-Idler
8	137-7040	1	Spring-Return, Pedal
9	322-9	1	Screw-HH
10	104-8300	9	Nut-HF, NI
11	119-9784	1	Screw-CARR
12	119-8822	1	Pulley-Idler
13	3230-6	1	Bolt-CARR
14	133-4371	1	V-Belt
15	140-8310	1	RH Hydro Transmission ASM
16	140-8311	1	LH Hydro Transmission ASM
17	322-11	2	Screw-HH
18	3256-23	6	Washer-Plain
19	322-13	4	Screw-HH
20	242-50	8	Nut-Lug
21	130-0718-01	1	Plate-Cross, Hydro
22	323-11	2	Screw-HH
23	323-7	2	Screw-HH
24	323-9	2	Screw-HH
25	104-8301	6	Nut-HF, NI
26	139-5855	1	Rod-Bypass, RH
27	139-5854	1	Rod-Bypass, LH
28	3256-22	2	Washer-Flat
29	3290-307	2	Pin-Cotter
30	322-14	2	Screw-HH
31	133-1247	2	Support-Hydro, Rear
32	3296-29	2	Nut-Lock, NI
34	325-6	4	Screw-HH
40	3256-3	1	Washer-Flat
41	99-5107	4	Nut-Lock

RH Hydro Transmission Assembly No. 140-8310

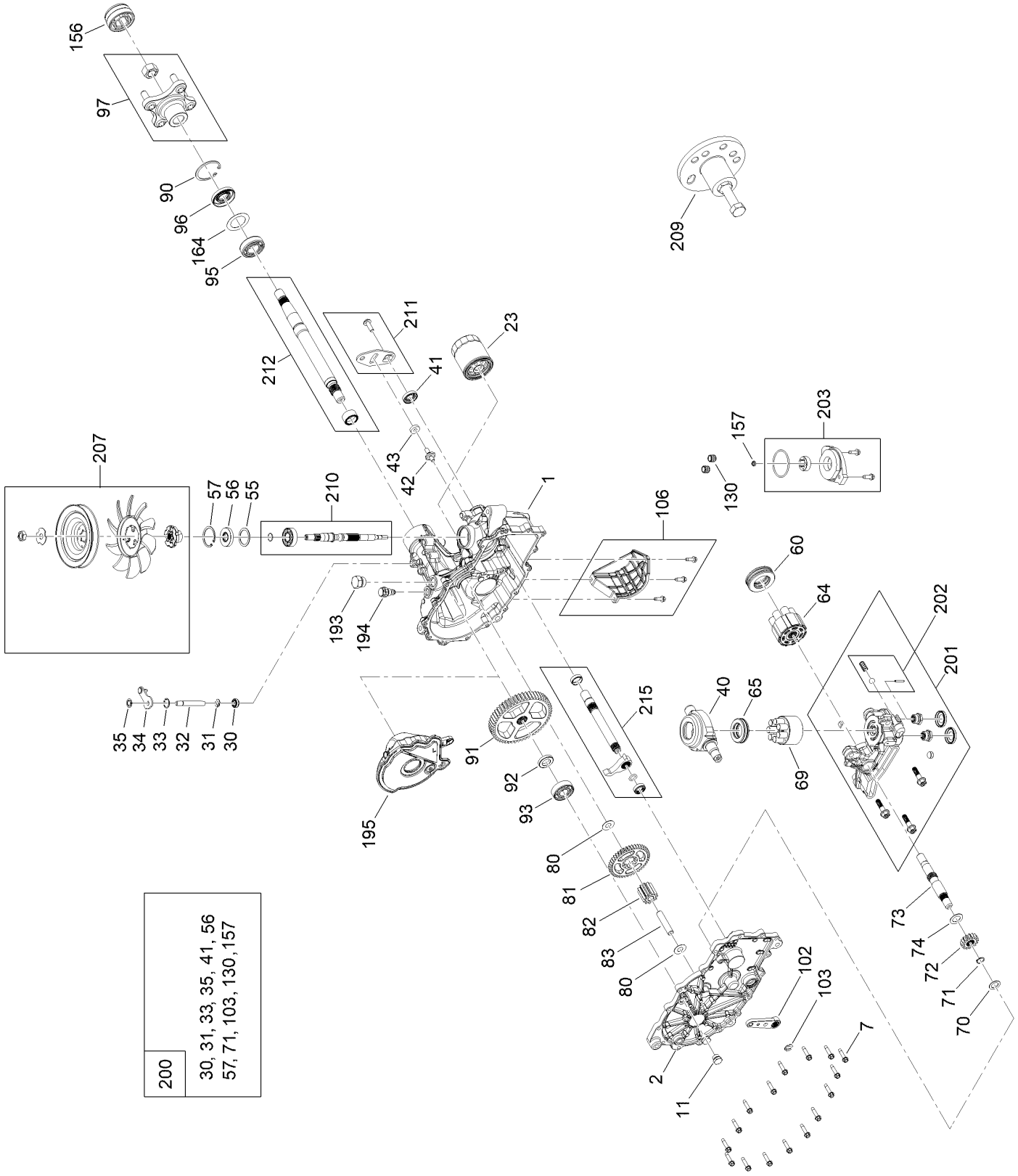

RH Hydro Transmission Assembly No. 140-8310 (continued)

Ref.	Part Number	Qty.	Description
1	140-8347	1	LH Main Housing Kit
2	140-8350	1	LH Side Cover Kit
7	117-5359	16	Screw-HHF
11	135-1140	1	Plug-Straight
23	109-3321	1	Element-Oil Filter, HYD
30	139-7497	1	Seal-Lip
31	106-8677	1	Ring-Retaining, External
32	114-1685	1	Rod-Bypass
33	106-8679	1	Ring-Retaining, Internal
34	107-2490	1	Arm-Bypass
35	106-8681	1	Ring-Retaining, External
40	104-5304	1	Swashplate-Trunnion
41	104-5313	1	Seal-Lip
42	104-2116	1	Stud
43	112-9853	1	Puck-Friction
55	104-5308	1	Spacer
56	104-5310	1	Seal-Lip
57	104-5309	1	Ring-Retaining
60	112-4154	1	Bearing-Thrust
64	139-4074	1	Cylinder Block ASM Kit
65	94-6922	1	Bearing-Thrust
69	110-8561	1	Pump Block ASM
70	104-5339	1	Washer-Flat
71	104-5340	1	Ring-Retaining
72	114-1690	1	Gear-14T
73	114-1691	1	Shaft-Motor
74	104-5360	1	Washer
80	94-1933	2	Washer
81	114-1692	1	Gear-45T
82	114-1693	1	Gear-11T
83	104-5329	1	Pin-Jackshaft
90	104-2169	1	Ring-Retaining
91	114-1694	1	Gear-54T
92	120-7975	1	Spacer
93	137-2004	1	Bearing Kit
95	120-7976	1	Bearing-Ball
96	104-2144	1	Seal
97	109-5939	1	Hub Kit
102	125-0021	1	Handle-Brake
103	131-0906	1	Ring-Retaining, EXT
106	139-7498	1	Filter Guard Kit
130	126-3251	2	Tube-Charge
156	115-5057	1	Cover-Nut, Axle
157	126-1930	1	Gerotor Seal Kit
164	121-5745	1	Spacer
193	140-8343	1	Plug
194	140-8356	1	Breather Fitting ASM
195	140-8358	1	LH Internal Expansion Tank ASM
200	140-8351	1	Seal Kit
201	137-2012	1	LH Charge Center Section Kit
202	114-8464	1	Charge Relief Kit
203	114-8465	1	Charge Kit
207	135-7343	1	Fan And Pulley Kit
209	114-8467	1	Puller-Hub, 4 Bolt
210	139-7502	1	Input Shaft Kit
211	117-5362	1	Control Arm Kit
212	114-8470	1	Axle Shaft Kit
215	140-8353	1	Inboard Kit

LH Hydro Transmission Assembly No. 140-8311

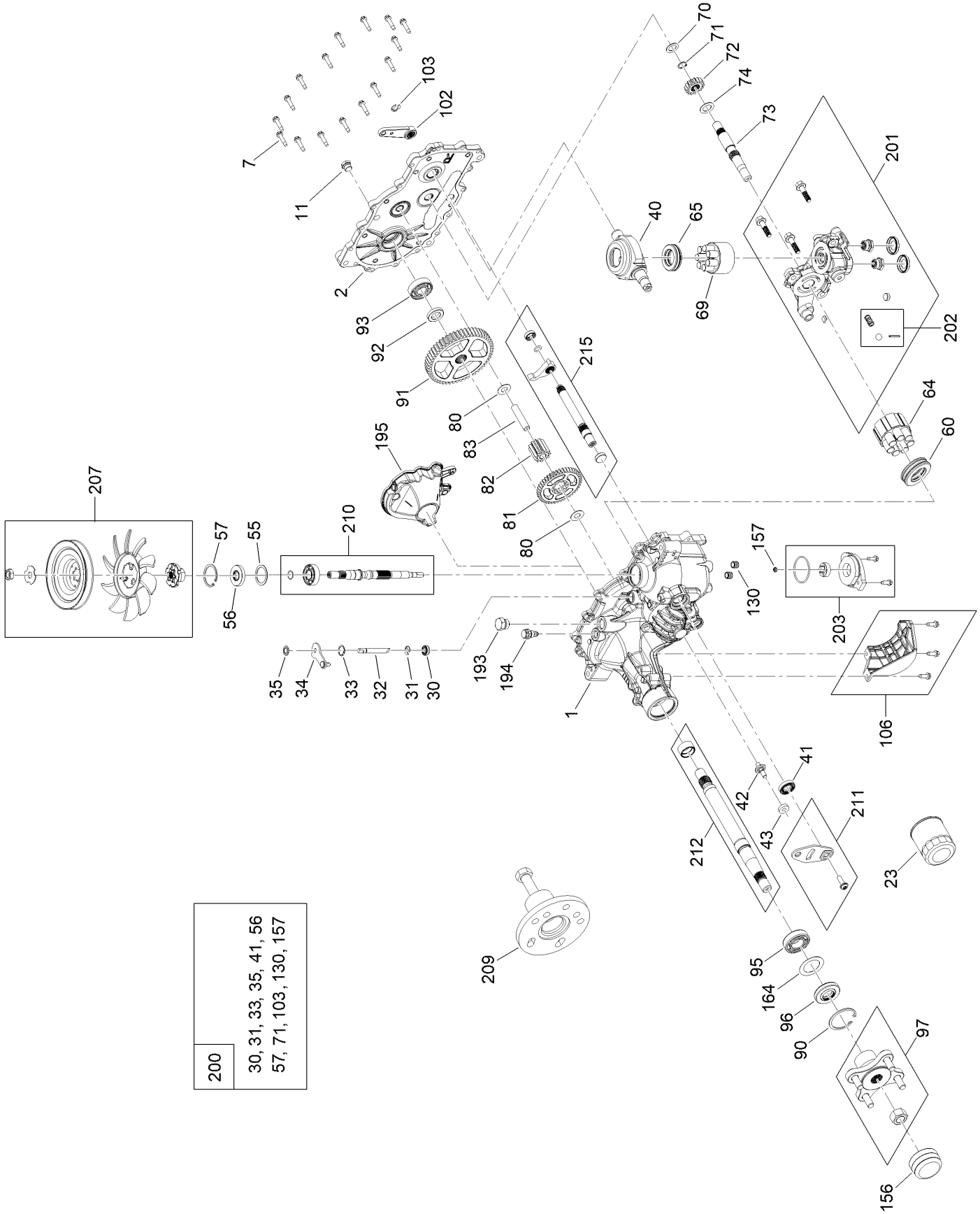

LH Hydro Transmission Assembly No. 140-8311 (continued)

Ref.	Part Number	Qty.	Description
1	140-8345	1	RH Main Housing Kit
2	140-8349	1	RH Side Cover Kit
7	117-5359	16	Screw-HHF
11	135-1140	1	Plug-Straight
23	109-3321	1	Element-Oil Filter, HYD
30	139-7497	1	Seal-Lip
31	106-8677	1	Ring-Retaining, External
32	114-1685	1	Rod-Bypass
33	106-8679	1	Ring-Retaining, Internal
34	112-9852	1	Arm-Bypass
35	106-8681	1	Ring-Retaining, External
40	104-5304	1	Swashplate-Trunnion
41	104-5313	1	Seal-Lip
42	104-2116	1	Stud
43	112-9853	1	Puck-Friction
55	104-5308	1	Spacer
56	104-5310	1	Seal-Lip
57	104-5309	1	Ring-Retaining
60	112-4154	1	Bearing-Thrust
64	139-4074	1	Cylinder Block ASM Kit
65	94-6922	1	Bearing-Thrust
69	110-8561	1	Pump Block ASM
70	104-5339	1	Washer-Flat
71	104-5340	1	Ring-Retaining
72	114-1690	1	Gear-14T
73	114-1691	1	Shaft-Motor
74	104-5360	1	Washer
80	94-1933	2	Washer
81	114-1692	1	Gear-45T
82	114-1693	1	Gear-11T
83	104-5329	1	Pin-Jackshaft
90	104-2169	1	Ring-Retaining
91	114-1694	1	Gear-54T
92	120-7975	1	Spacer
93	137-2004	1	Bearing Kit
95	120-7976	1	Bearing-Ball
96	104-2144	1	Seal
97	109-5939	1	Hub Kit
102	125-0021	1	Handle-Brake
103	131-0906	1	Ring-Retaining, EXT
106	139-7499	1	Filter Guard Kit
130	126-3251	2	Tube-Charge
156	115-5057	1	Cover-Nut, Axle
157	126-1930	1	Gerotor Seal Kit
164	121-5745	1	Spacer
193	140-8343	1	Plug
194	140-8356	1	Breather Fitting ASM
195	140-8357	1	RH Internal Expansion Tank ASM
200	140-8351	1	Seal Kit
201	137-2005	1	RH Charge Center Section Kit
202	114-8464	1	Charge Relief Kit
203	114-8465	1	Charge Kit
207	135-7343	1	Fan And Pulley Kit
209	114-8467	1	Puller-Hub, 4 Bolt
210	139-7502	1	Input Shaft Kit
211	117-5362	1	Control Arm Kit
212	114-8470	1	Axle Shaft Kit
215	140-8352	1	Inboard Kit

Brake Assembly

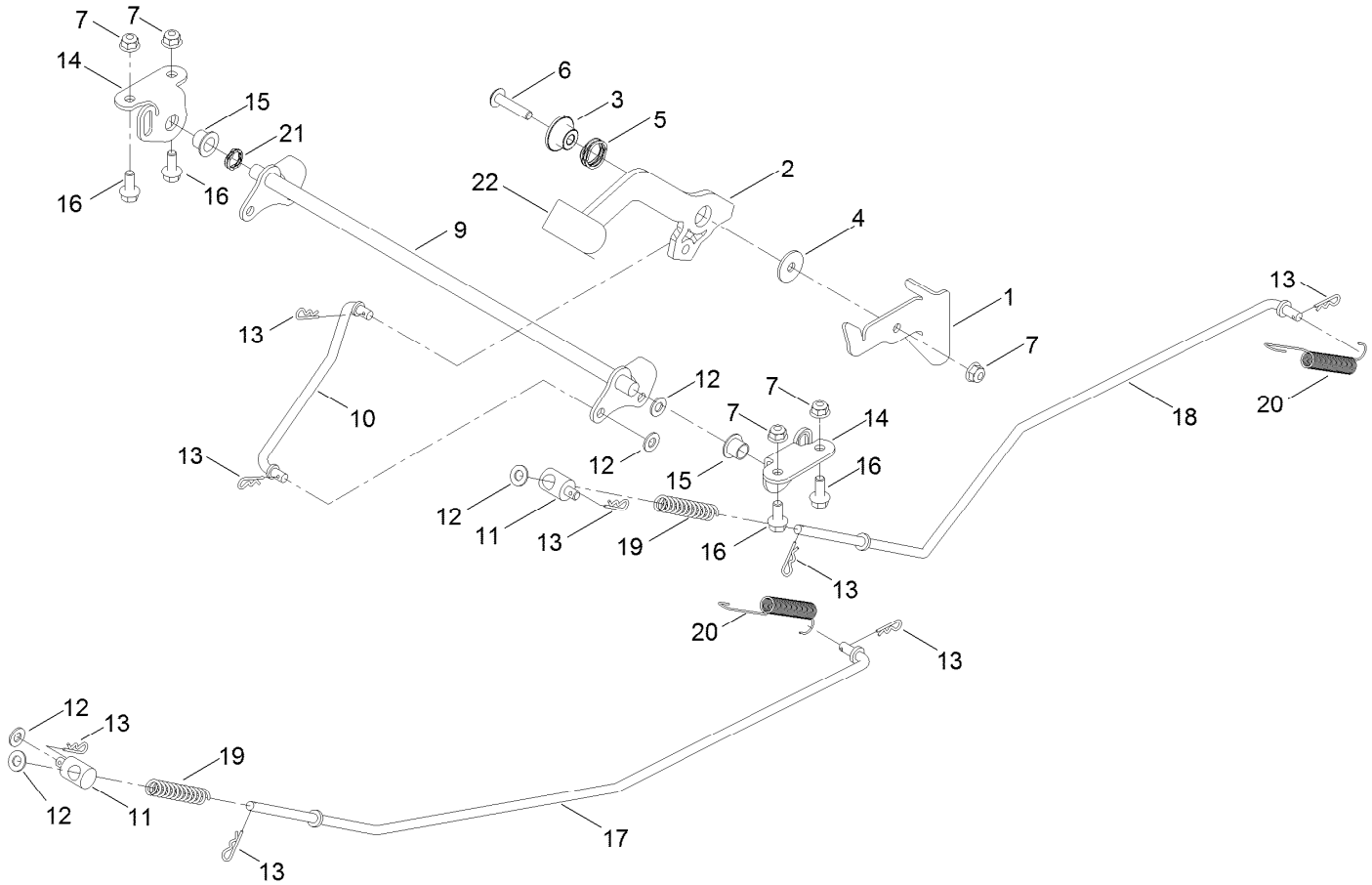

Brake Assembly (continued)

Ref.	Part Number	Qty.	Description
1	136-5554	1	Detent-Brake
2	140-0412	1	Handle-Brake, Parking
3	139-3572	1	Bushing-Flange
4	5-4460	1	Washer-Pivot
5	120-5116	1	Washer-Wave
6	126-7439	1	Screw-Torx
7	104-8300	5	Nut-HF, NI
9	133-9338	1	Bellcrank-Brake
10	133-9342	1	Rod-Brake, Intermediate
11	138-7212	2	Fitting-Rod
12	3256-23	5	Washer-Plain
13	3290-307	8	Pin-Cotter
14	139-5878-03	2	Plate-Support, Bellcrank
15	125-5239	2	Bushing-Flange
16	3234-47	4	Screw-HHF
17	133-9343	1	Rod-Brake, RH
18	133-9344	1	Rod-Brake, LH
19	1-603807	2	Spring-Return, Neutral
20	110769	2	Spring-Extension
21	137-5011	1	Spring-Wave
22	140-0413	1	Grip-Handle

Tire Assembly

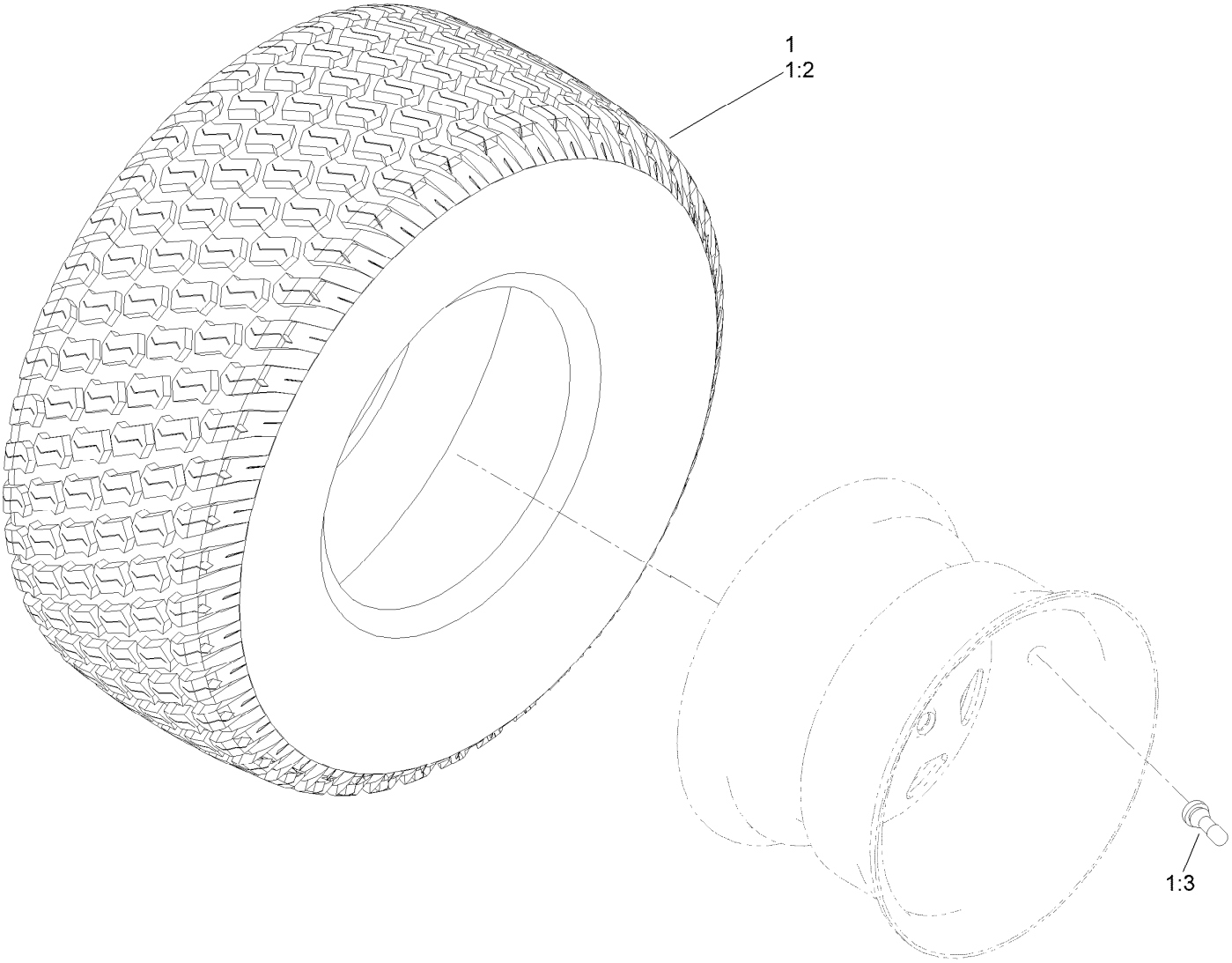

Tire Assembly (continued)

Ref.	Part Number	Qty.	Description
1	145-0495	2	Tire ASM
1:2	145-0494	1	Tire

Ref.	Part Number	Qty.	Description
1:3	232-27	1	Stem-Valve
1:99	105-4070	1	Tube-Inner ■ ●

● Not illustrated

■ Optional Equipment

Seat Assembly

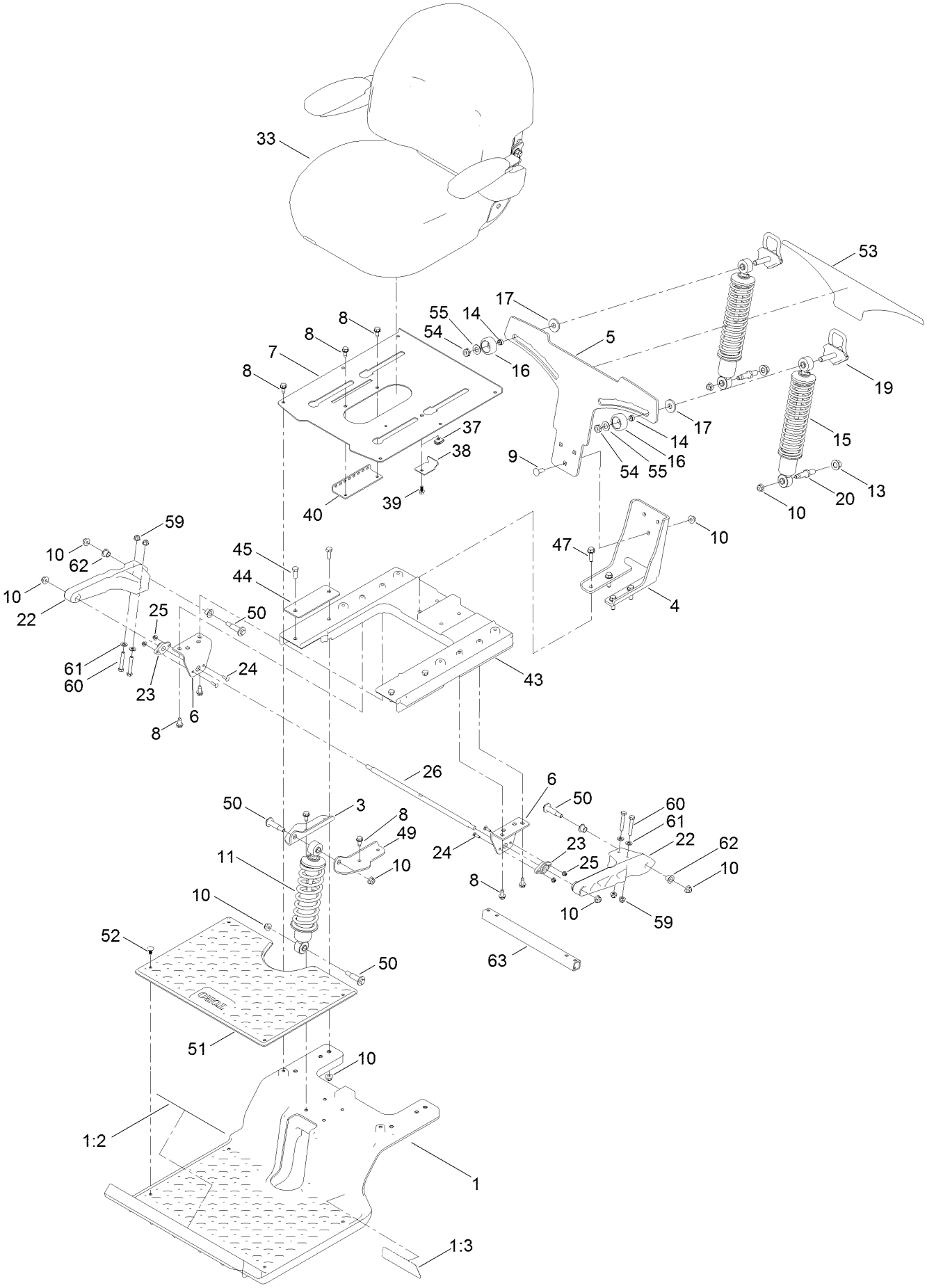

Seat Assembly (continued)

Ref.	Part Number	Qty.	Description
1	136-9191	1	Subframe-Front
1:2	132-0869	1	Decal-Danger
1:3	136-7470	1	Decal
3	133-9319-03	1	Bracket-Shock Mount, Upper (RH)
4	133-4442-03	1	Bracket-Mount, Lower
5	133-4462-03	1	Bracket-Mounting, Shock
6	137-1967-03	2	Bracket-Mount, Swing Arm
7	133-7029-03	1	Pan-Seat
8	32144-70	16	Screw-HWHTF
9	3231-22	3	Screw-CARR
10	104-8301	15	Nut-HF, NI
11	133-5192	1	Shock/Spring ASM
13	99-5107	2	Nut-Lock
14	133-5109	2	Bearing-Sleeve
15	133-5193	2	Shock/Spring ASM
16	136-5636	2	Knob-Lock, Cam
17	131-4699	2	Washer-Plastic
19	133-5105	2	Cam Lock ASM
20	133-4401	2	Bolt-Shoulder
22	136-8979	2	Trailing Arm
23	127-0146	2	Bearing-Flange
24	3229-20	4	Screw-CARR
25	120-4578	4	Nut-HF
26	137-1968	1	Rod-Pivot
33	140-2714	1	Seat ASM
37	107069	1	Clip
38	138-7214	1	Bracket-Stop, Seat
39	99-6810	1	Screw-HHF
40	131-4008-03	1	Bracket-Latch, Seat
43	137-7031	1	Subframe-Rear
44	133-7089-03	2	Plate-Backer
45	323-6	4	Screw-HH
47	32144-109	4	Screw-Thd
49	133-9318-03	1	Bracket-Shock Mount, Upper (LH)
50	136-7198	4	Bolt-Shoulder
51	133-5190	1	Floormat
52	117-2382	4	Plug-Plastic
53	133-5198	1	Decal-Adjustment, Ride
54	3296-45	2	Nut-Hex
55	3-6803	2	Washer-Adjusting
59	104-8300	4	Nut-HF, NI
60	322-10	4	Screw-HH
61	3256-23	4	Washer-Plain
62	125-5239	4	Bushing-Flange
63	137-1969-03	1	Tube-Arm, Trailing

Seat Assembly No. 140-2714

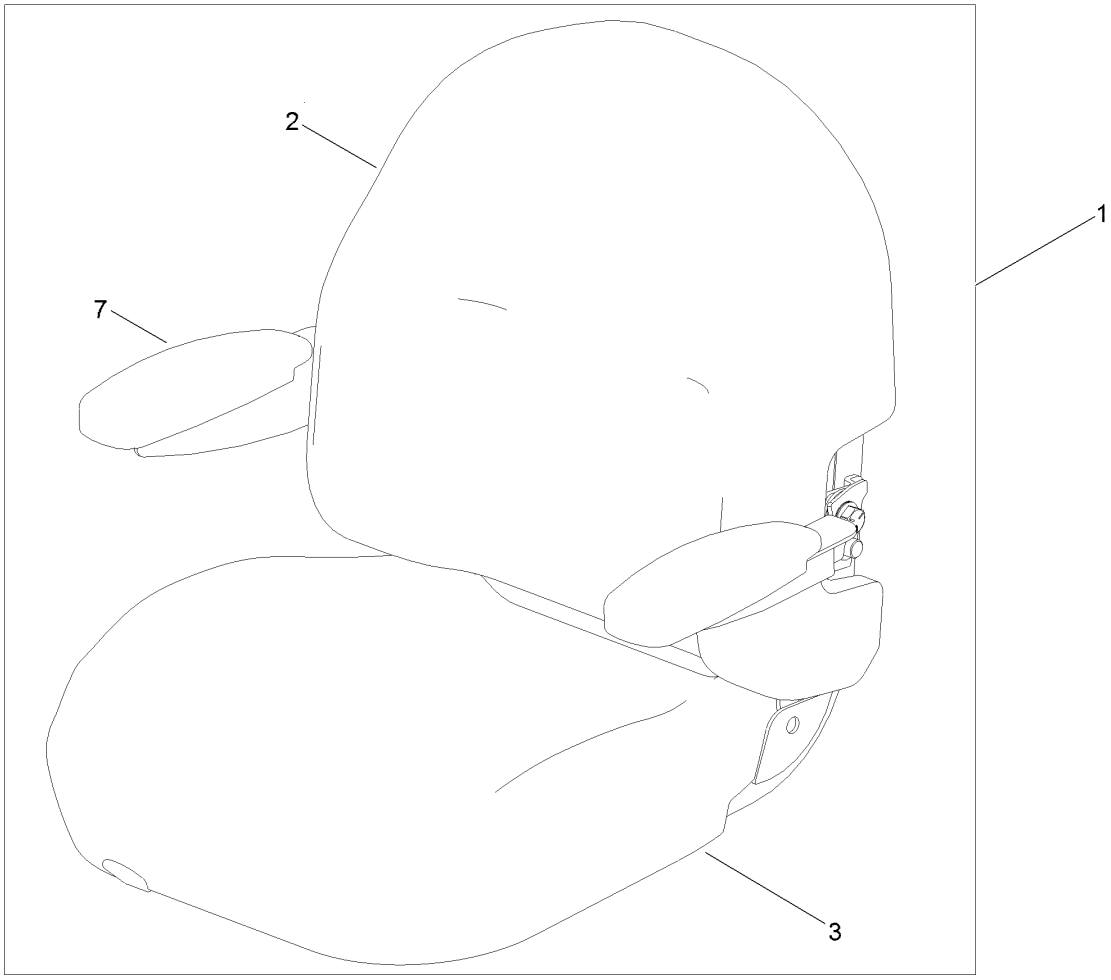

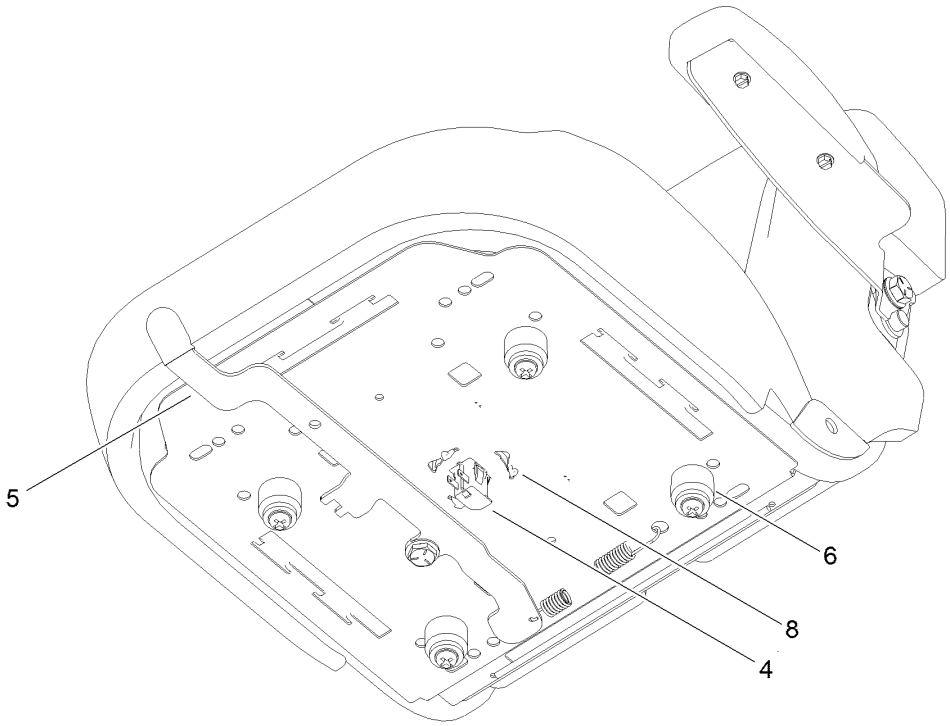

Seat Assembly No. 140-2714 (continued)

Ref.	Part Number	Qty.	Description
1	139-7548	1	Seat ASM
2	140-2077	1	Cover-Seat Back
3	140-2078	1	Cover-Seat Base
4	82-2190	1	Switch-Bail
5	131-4153	1	Track ASM
6	131-4154	1	Bushing ASM
7	139-5823	1	Arm Rest Kit
8	140-3468	1	Cap-Switch, Actuator

Motion Control Assembly

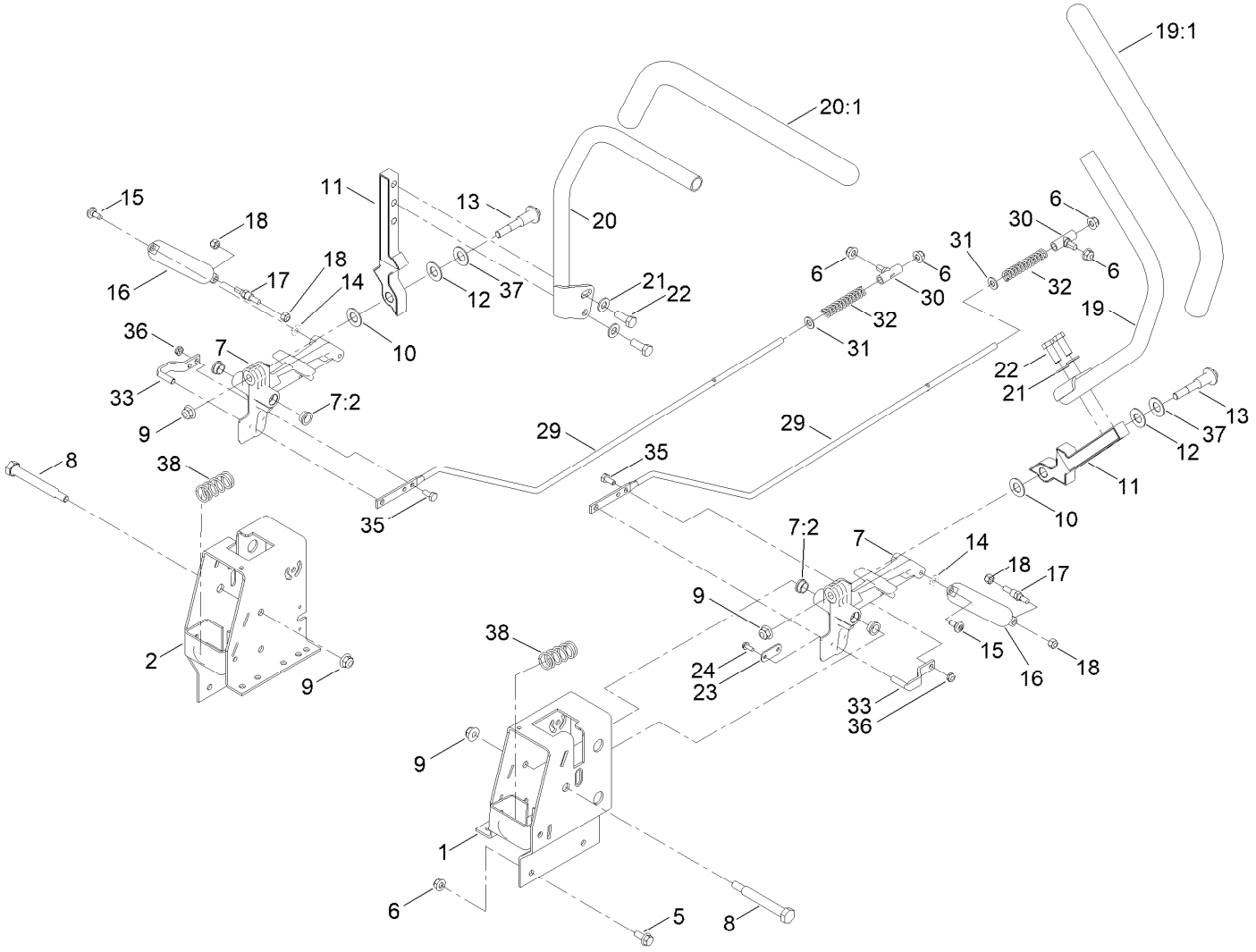

Motion Control Assembly (continued)

Ref.	Part Number	Qty.	Description
1	136-5614-03	1	Box-Control, LH
2	136-5613-03	1	Box-Control, RH
5	3234-47	8	Screw-HHF
6	104-8300	12	Nut-HF, NI
7	119-3470	2	Actuator Arm ASM
7:2	256-156	2	Bushing-Flange
8	115-5099	2	Bolt-Pivot
9	104-8301	4	Nut-HF, NI
10	120-2273	2	Washer-Nylon
11	136-5570-05	2	Arm-Control
12	117-1240	2	Washer
13	139-2556	2	Bolt-Pivot
14	119-8952	2	Washer-Spcl
15	120-7950	2	Screw-Torx
16	132-6853	2	Damper-Non Cavitating
17	138-7215	2	Stud-Damper
18	3296-42	4	Nut-Lock, NI

Ref.	Part Number	Qty.	Description
19	133-7055	1	Handle-Control, LH
19:1	121-0726	1	Grip
20	133-7057	1	Handle-Control, RH
20:1	121-0726	1	Grip
21	3256-24	4	Washer-Plain
22	323-6	4	Screw-HH
23	119-8948	2	Plate-Stop, Hydro
24	32144-1	4	Screw-Taptite
29	138-7217	2	Rod-Hydro
30	138-7218	2	Mount-Rod, Hydro
31	3256-23	2	Washer-Plain
32	138-7252	2	Spring-Compression
33	121-1753	2	Pin-Rod, Hydro
35	321-3	2	Screw-HH
36	3296-56	2	Nut-Lock, NI
37	119-8925	2	Washer-Belleville
38	138-7219	2	Spring-Return

Engine and Muffler Assembly

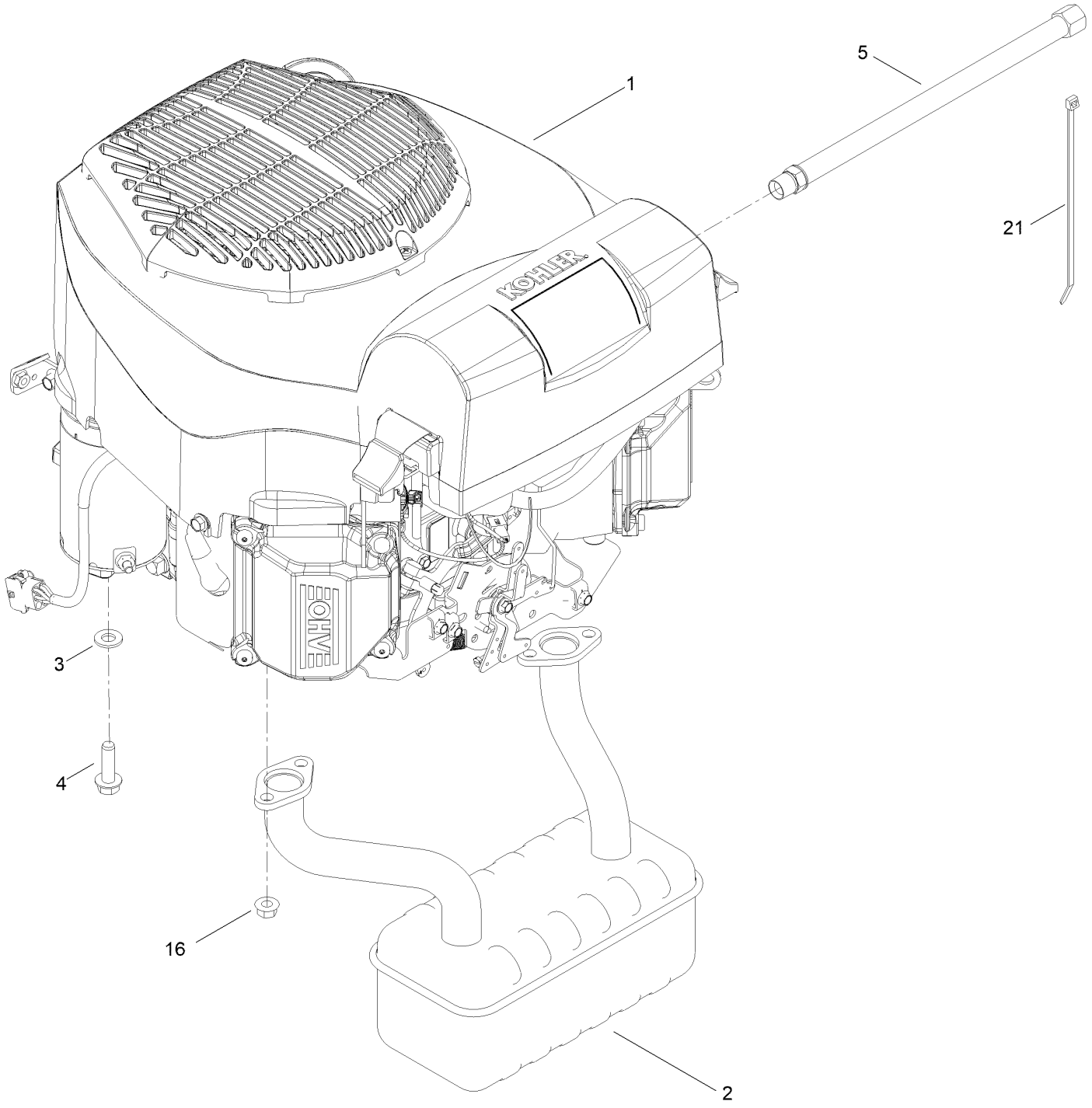

Engine and Muffler Assembly (continued)

Ref.	Part Number	Qty.	Description
1		1	Engine-Kohler Kt745 ■▲
1:4	281-1	1	Plug-Pipe, SQH ●
2	139-5868	1	Muffler
3	3256-24	4	Washer-Plain
4	32144-109	4	Screw-Thd
5	117-1261	1	Hose-Drain, Oil
16	33004-00	4	Nut-HF
21	614249	1	Tie-Cable
99	110-6697	1	Gasket-Exhaust ●

● Not illustrated
▲ Obtain parts from www.kohlerplus.com
■ Not serviced separately

Body Styling and Fuel Pod Assembly

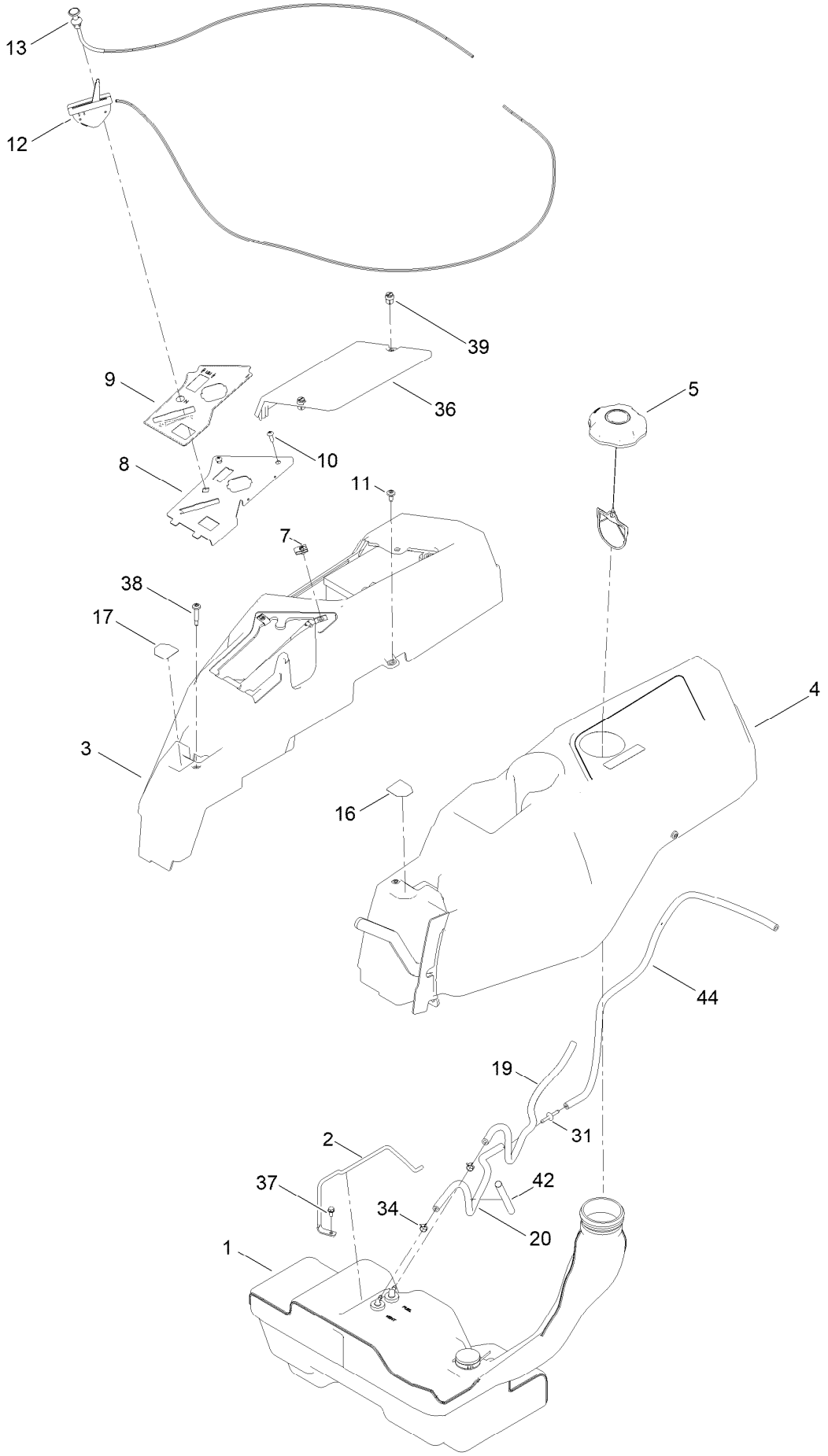

Body Styling and Fuel Pod Assembly (continued)

Ref.	Part Number	Qty.	Description
1	144-5303	1	Tank-Fuel ASM
2	136-4180	1	Rod-Hold Down
3	133-9307	1	Pod-RH
4	133-9315	1	Pod-LH
5	137-4119	1	Cap-Fuel, Ratcheting
7	107069	2	Clip
8	139-7486-03	1	Panel-Control
9	139-7473	1	Decal-Panel, Control
10	3258-166	2	Screw-PRH
11	120-7950	4	Screw-Torx
12	139-3267	1	Cable-Throttle
13	139-2402	1	Cable-Choke
16	136-4243	1	Decal-Lever, Control (LH)
17	136-4244	1	Decal-Lever, Control (RH)
19	110-5701	1	Hose-Fuel
20	138-3151	1	Hose-Fuel
31	144-1983	1	Adapter Orifice
34	2412-98	3	Clamp-Hose
36	133-9308	1	Cover-Battery
37	32144-4	1	Screw-HWH
38	136-4195	2	Screw-Shoulder
39	121-5840	2	Fastener
42	138-2522	1	Sleeve-Fuel Line Protector
44	119-6074	1	Hose-Fuel

Fuel Tank Assembly No. 144-5303

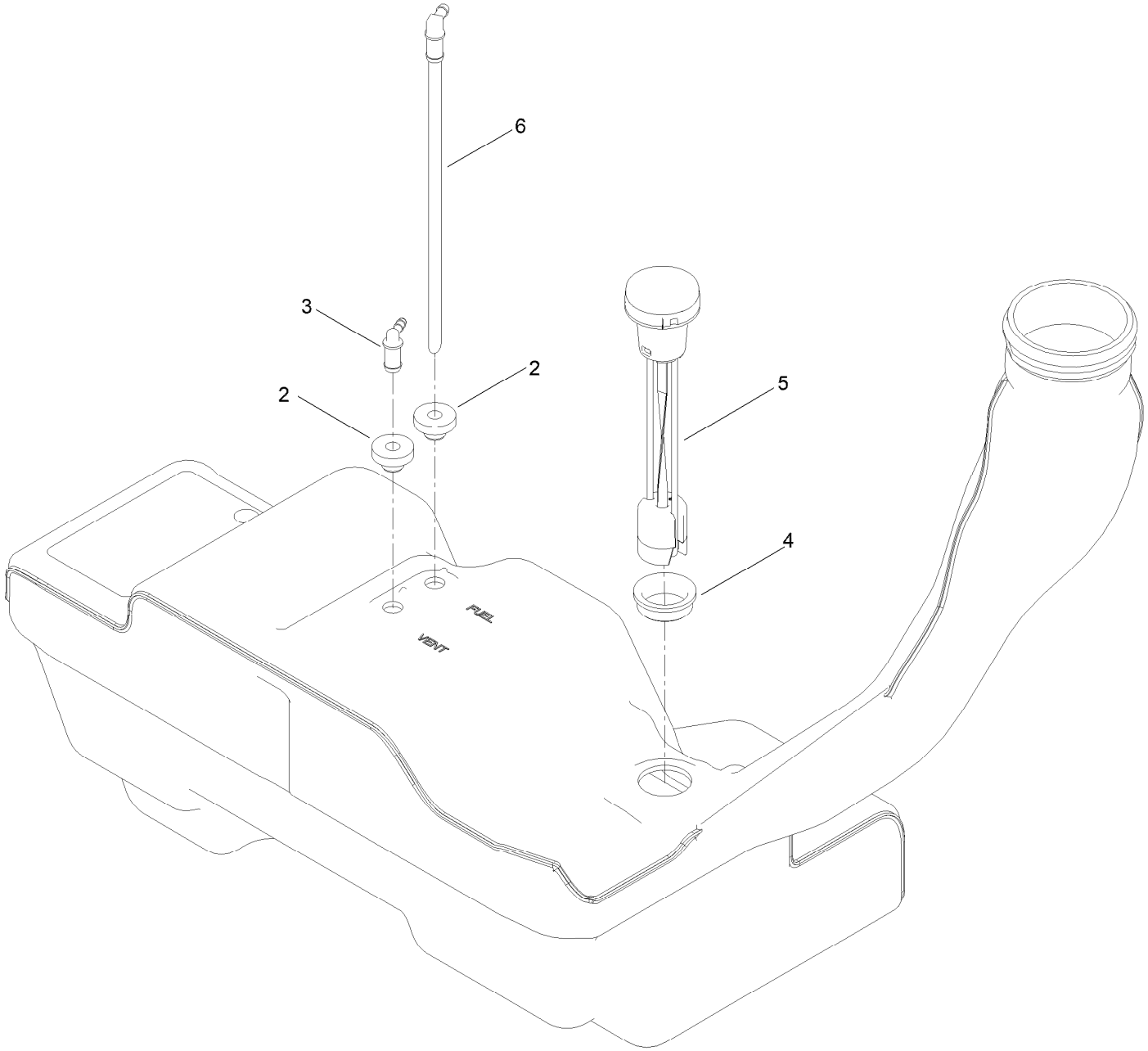

Fuel Tank Assembly No. 144-5303 (continued)

Ref.	Part Number	Qty.	Description
2	46-6560	2	Bushing
3	144-5302	1	Fitting-Elbow 90
4	133-9269	1	Grommet-Fuel
5	133-9270	1	Gauge-Fuel
6	121-0793	1	Connector-Elbow, 90 DEG

Electrical Assembly

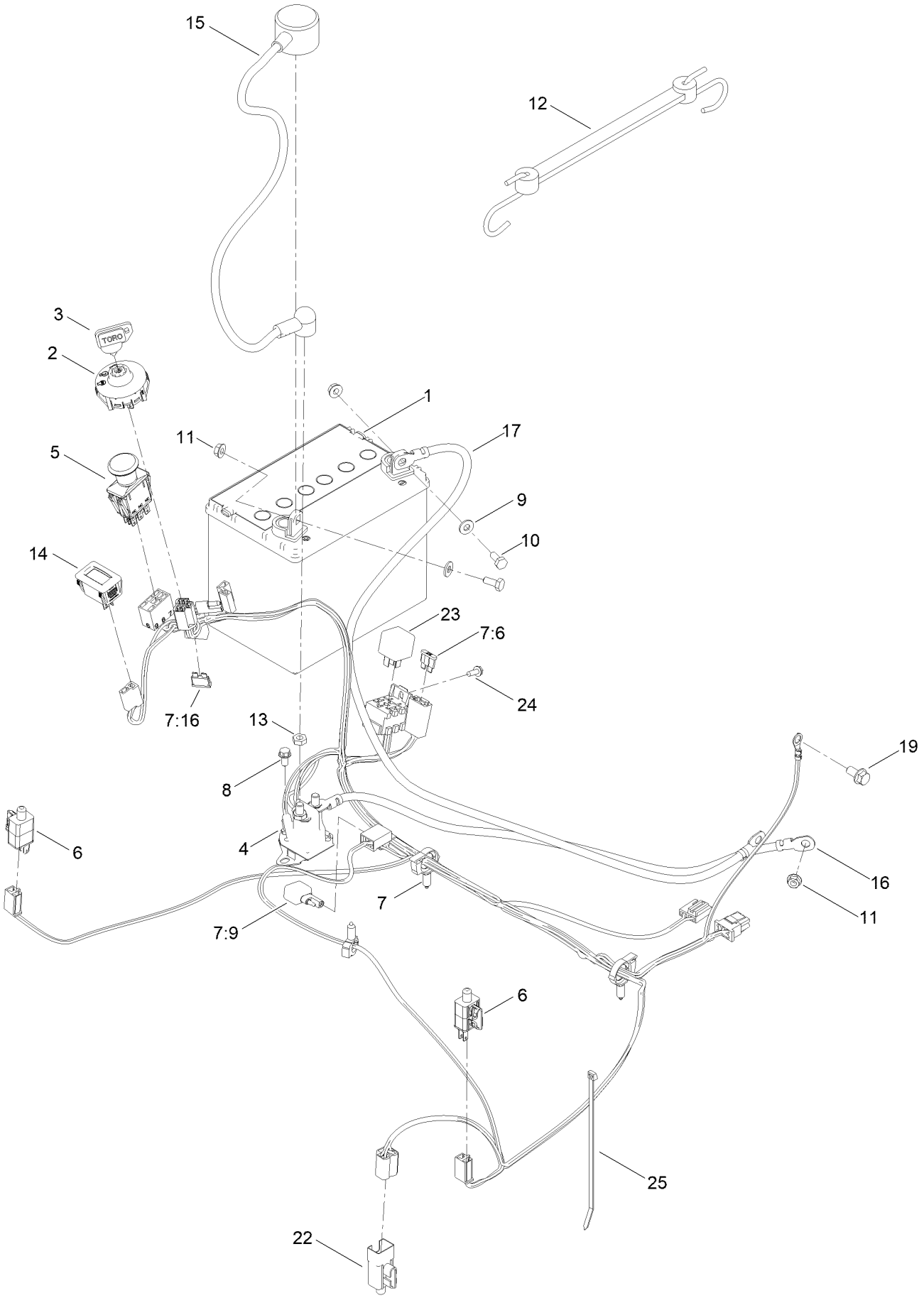

Electrical Assembly (continued)

Ref.	Part Number	Qty.	Description
1	104-8162	1	Battery
2	137-4100	1	Switch-Ignition
3	63-8360	1	Key-Ignition
4	117-1197	1	Solenoid
5	103-5221	1	Switch-PTO
6	110-6765	2	Switch
7	137-7002	1	Harness-Wire
7:6	109102	1	Fuse-Blade, 25 Amp
7:9	100-4918	1	Diode
7:16	109355	1	Fuse-Blade, 15 Amp
8	32144-4	2	Screw-HWH
9	3256-22	2	Washer-Flat
10	321-3	2	Screw-HH
11	32128-33	3	Nut-HF
12	104-2466	1	Holddown-Battery
13	3220-2	2	Nut-Jam
14	120-2244	1	Hourmeter
15	115-3864	1	Cable-Battery, Positive
16	144-5276	1	Cable-Battery, Rd ASM
17	117-7240	1	Cable-Battery, Negative
19	3234-14	1	Screw-HHF
22	99-7408	1	Switch-Reverse
23	98-7249	1	Relay
24	32144-1	1	Screw-Taptite
25	614249	1	Tie-Cable

60 Inch Deck Assembly

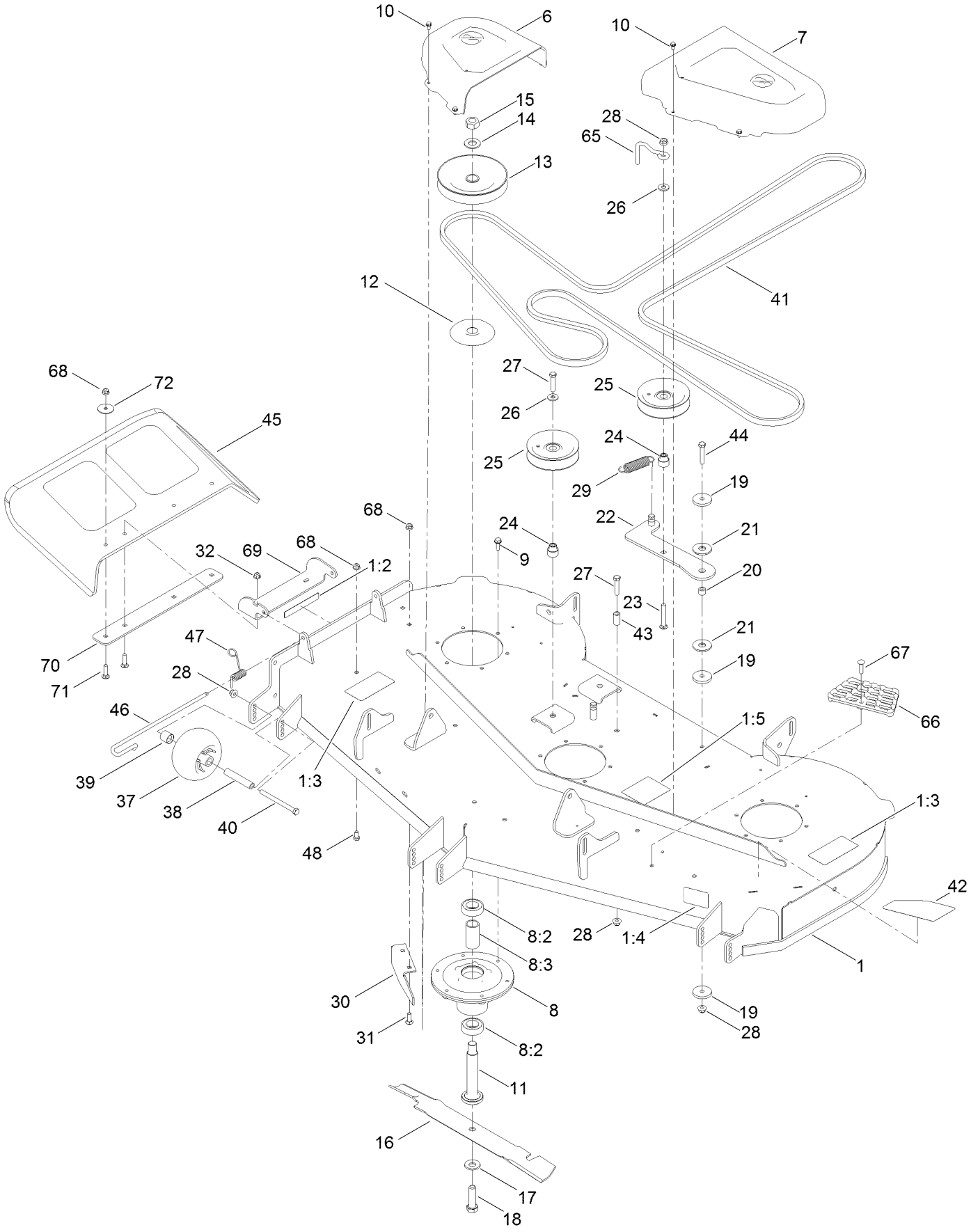

60 Inch Deck Assembly (continued)

Ref.	Part Number	Qty.	Description
1	140-0354	1	60 Inch Deck ASM
1:2	130-0731	1	Decal-Danger
1:3	132-0872	2	Decal-Danger, Deck
1:4	130-0765	1	Decal-Scalp, Anti
1:5	117-1194	1	Decal-Routing, Belt
6	133-9283	1	Cover-Belt, RH
7	133-9282	1	Cover-Belt, LH
8	139-2357	3	Spindle ASM
8:2	116-0720	2	Bearing-Ball
8:3	138-7220	1	Spacer-Bearing
9	32144-41	18	Screw-Taptite
10	32144-4	8	Screw-HWH
11	115-2642	3	Shaft-Spindle
12	138-7221	3	Shield-Bearing
13	140-2126	3	Pulley
14	7-4150	3	Washer
15	3219-7	3	Nut-Hex
16	115-9649-03	3	Blade-Hi Flow
17	125-1736	3	Washer-Belleville
18	51-4060	3	Screw-Blade
19	110-9981	3	Washer-Plain
20	138-7225	1	Spacer
21	114-0463	2	Washer-Friction, Composite
22	138-7226	1	Idler Arm ASM
23	3231-31	1	Screw-CARR
24	138-7227	3	Bushing-Idler
25	132-4718	3	Pulley-Idler, Flat

Ref.	Part Number	Qty.	Description
26	80-6990	3	Washer-Hardened
27	323-9	3	Screw-HH
28	104-8301	6	Nut-HF, NI
29	138-7228	1	Spring-Extension
30	119-3388-03	1	Baffle-Cutoff
31	3230-22	2	Screw-CARR
32	104-8300	2	Nut-HF, NI
37	1-603299	3	Roller-Scalp, Anti
38	138-7229	3	Tube-Spanner
39	104-0892	3	Spacer-Axle, Rear
40	323-23	3	Screw-HH
41	133-4372	1	V-Belt
42	139-3256	1	Decal - Deck
43	138-7230	1	Spacer-Fender
44	323-10	1	Screw-HH
45	117-1270	1	Deflector
46	138-7231	1	Pin-Chute
47	138-7232	1	Spring-Torsion
48	322-2	3	Screw-HH
65	136-5615	1	Guide-Belt, Idler
66	126-4781-03	1	Step-Deck
67	139-1702	1	Bolt-Carriage
68	104-8300	5	Nut-HF, NI
69	114-1648-03	1	Bracket-Deflector, Upper
70	115-5048-03	1	Plate-Deflector
71	3230-3	4	Screw-CARR
72	3256-68	2	Washer-Flat

Frame Decal Assembly

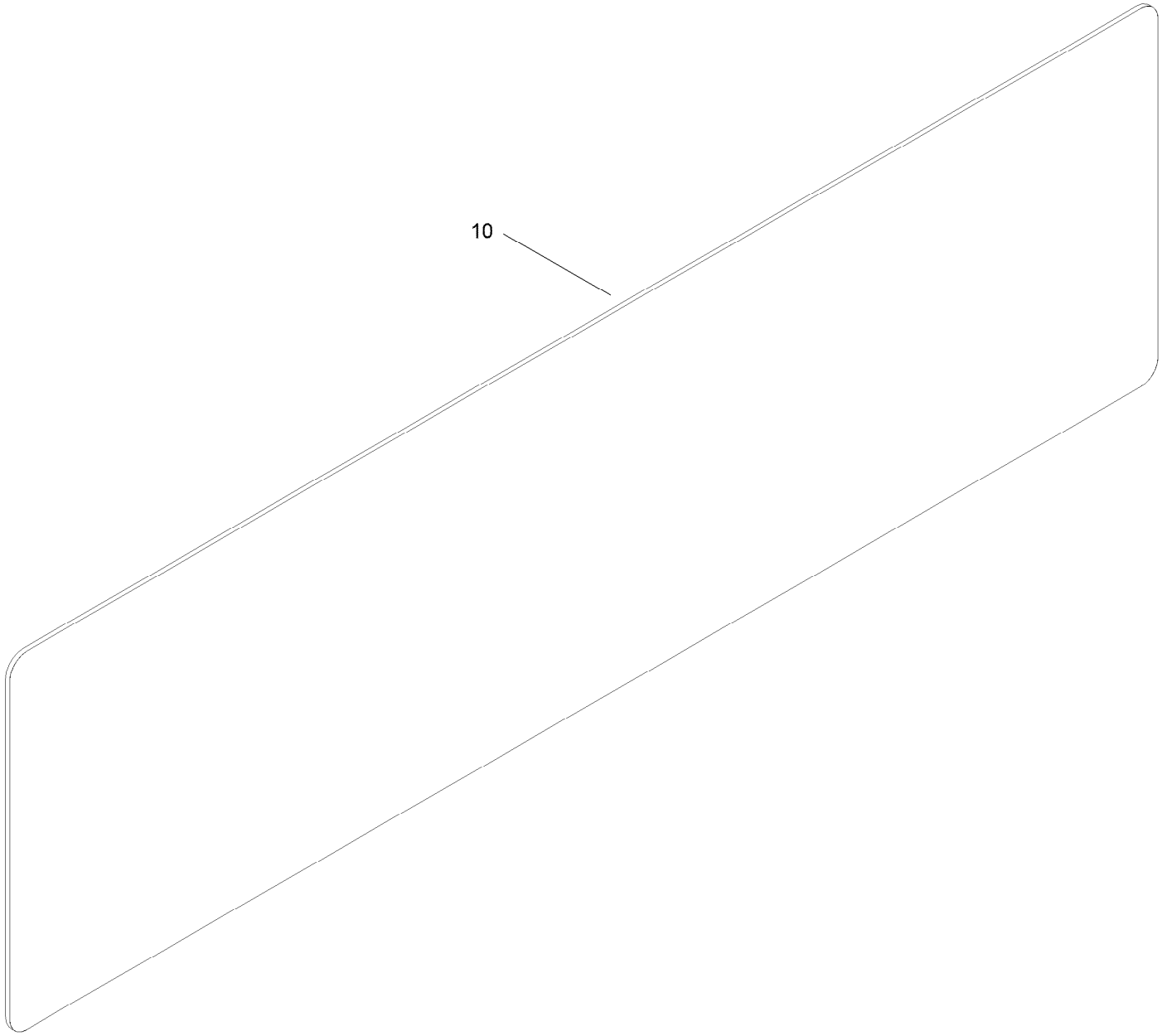

Frame Decal Assembly (continued)

Ref.	Part Number	Qty.	Description
10	140-2099	1	Decal

Maintenance and HOC Decal Assembly

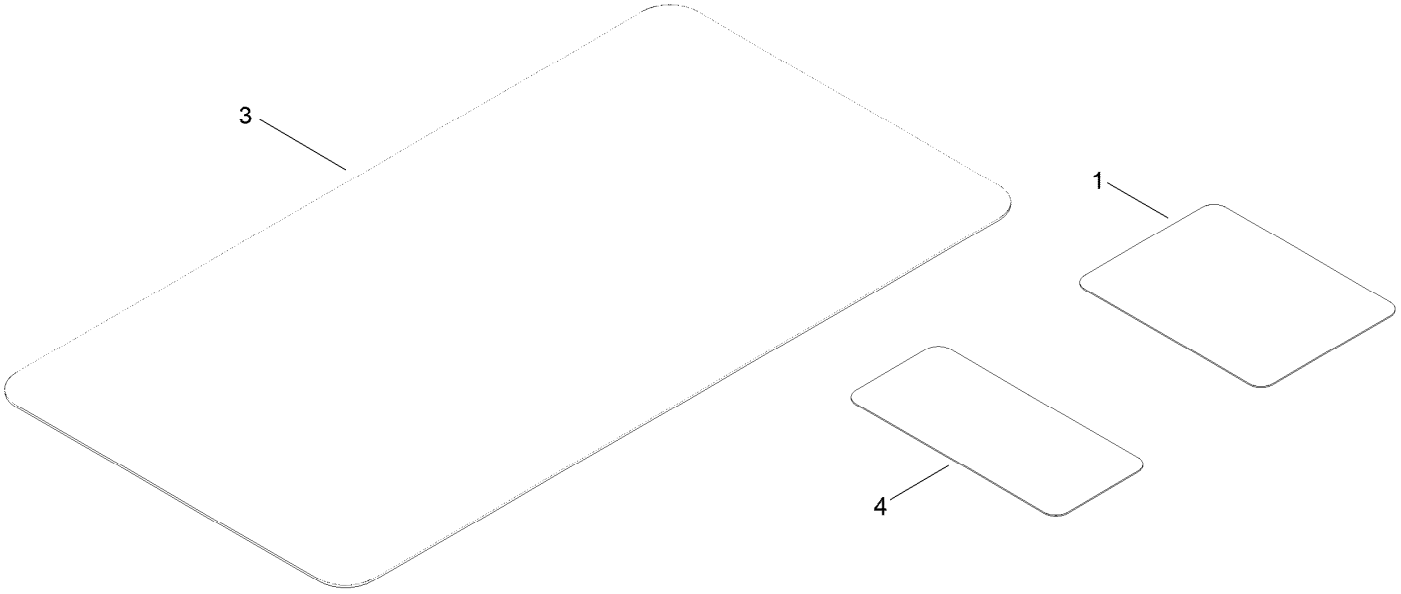

Maintenance and HOC Decal Assembly (continued)

Ref.	Part Number	Qty.	Description
1	136-5596	1	Decal-Maintenance
3	139-3550	1	Decal-HOC
4	121-5684	1	Decal-Location, Service Dealer

Clutch Assembly

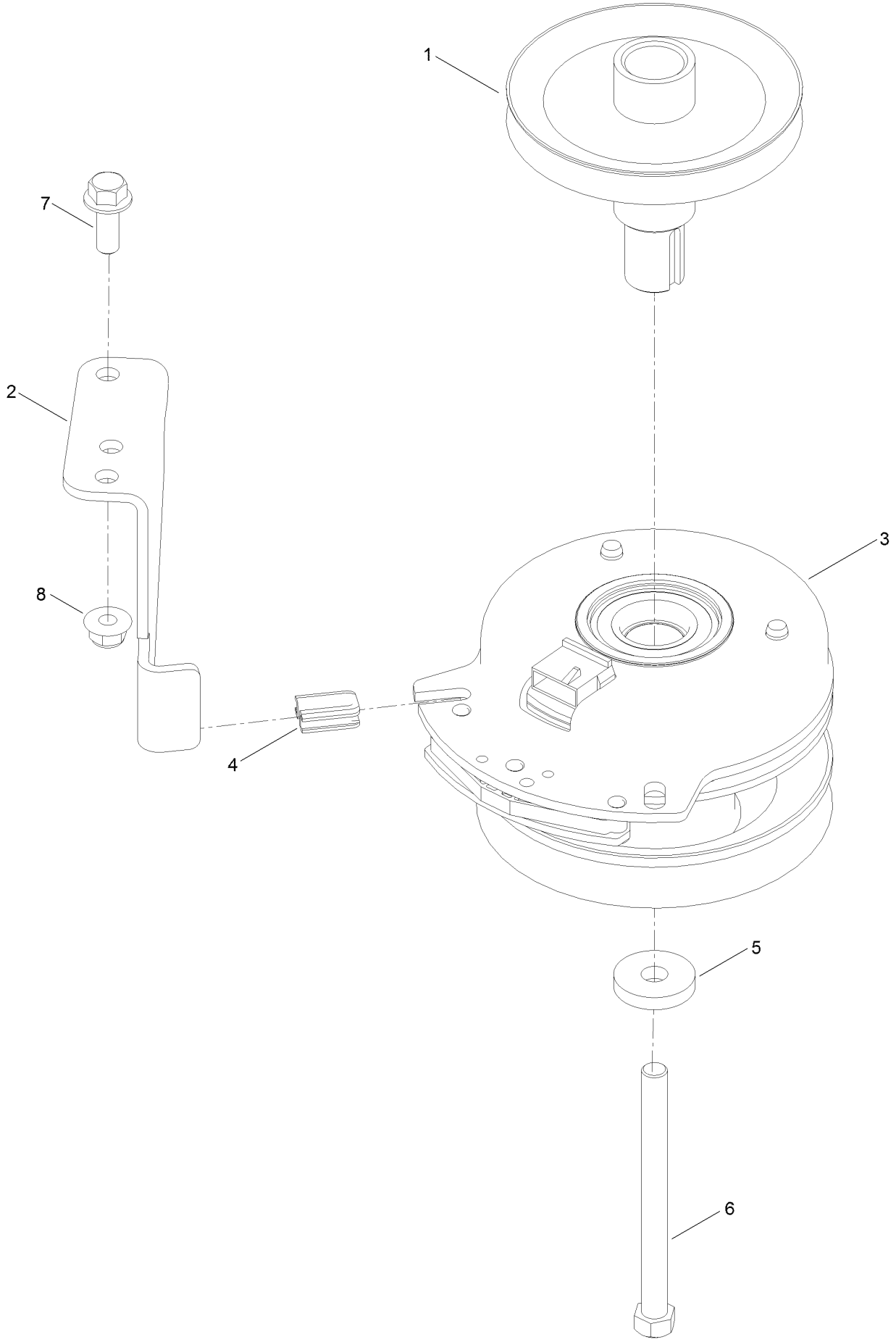

Clutch Assembly (continued)

Ref.	Part Number	Qty.	Description
1	138-9831	1	Pulley-Engine
2	137-7000	1	Stop-Clutch (Wide)
3	127-3410	1	Clutch-PTO
4	120-2217	1	Isolator-Clutch
5	112843	1	Washer
6	3212-19	1	Screw-HH
7	3234-42	1	Screw-HHF
8	104-8301	1	Nut-HF, NI

Attachments and Accessories

For 75316 60in TITAN MyRIDE Riding Mower

Product Name	Model/Part
Jack Kit	127-6666
Fuel Stabilizer .05 oz	130-2393
4-Cycle Fuel, Snow And Lawn 32oz Can	131-3823
Toro Premium Fuel Treatment 12oz Bottle	131-6572
5 Gallon Bucket	133-2533
60in Recycler Kit	136-7490
Light Kit	136-7493
Sunshade	137-7011
Product Cover	137-7012
Oil-30/10W-30 Synthetic (Quart)	138-6053
ROPS Kit	139-2638
Bucket Mount Kit	140-2066
Jack Mount Kit	140-2067
HD Springs Kit	140-2069
HD Bagger Cover Kit	140-5036
Weight Kit	140-5084
Striping Kit 54/60in	140-5120
Leaf Bagging Enhancement Kit	140-5122
Deck Lift Assist Kit	140-5123
Bagger Mount Kit	140-5125
Hydro Service Kit	144-5347
Flat Free Caster Wheel Kit	145-0489
10W30 4-Cycle Engine Oil (32oz Bottle)	38280
Toro 4-Cycle SAE 30 Oil (32oz Bottle)	38903
Powered Bagger	79346
Residential Z Slope Sensor Kit	79400

Notes:

TORO®

Count on it.