Form No. 3469-830 Rev A

TORO®

Count on it.

Parts Catalog

Grandstand® 36in HDM

Model No. 74535—Serial No. 417200000 and Up

Register at www.Toro.com.
Original Instructions (EN)

3469-830 A

Ordering Replacement Parts

To order replacement parts, please supply the part number, the quantity, and the description of each part desired.

Understanding Reference Numbers

Each identified part in an illustration has a reference number. The reference number for a part also appears in the parts list, along with other information about the part.

This catalog uses two special reference number formats, one to indicate parts in a service assembly and another to indicate the quantity of a given part in an illustration.

Service Assembly Reference Numbers

Parts in service assemblies have reference numbers in the form a:b. The a represents the reference number of the entire service assembly and the b represents a sequential number unique to each part within the service assembly.

For example, a wheel assembly might be identified by reference number 6, the tire by 6:1, the valve by 6:2, and the wheel by 6:3. When you order the assembly identified by reference number 6, you receive all parts identified by reference numbers 6:1,6:2, and 6:3. However, you may also order any part individually. Reference numbers of this type appear in illustration and in parts lists.

Reference Numbers Indicating Quantity

In an illustration, if a reference number indicates more than one part, the reference number has the form nX y. The n represents the quantity of the part, the X is the multiplication symbol, and the y represents the reference number.

For example, in an illustration, the reference number 2X 37 means that two of the parts identified by reference number 37 are indicated.

Contents

Deck Lift Assembly 4
Height-of-Cut Lever No. 142-2579 6
Lift Rod Assembly No. 142-2581 8
Frame Assembly 10
Park Brake Assembly 12
Platform Assembly 14
Hydraulic Assembly 16
Idler Arm Assembly No. 135-1270 18
Engine Assembly 20
Motion Control Assembly 22
Left Motion Control Assembly No. 135-1304 24
Right Motion Control Assembly No. 135-1305 26
Fuel Assembly 28
Fuel Line and Valve Assembly No. 142-3596 30
Electrical Assembly 32
Harness Assembly No. 142-2926 34
Guarding Assembly 36
36 Inch Deck Assembly 38
Deck Decal Assembly No. 161-6759 40
Idler Arm Assembly No. 135-1679 42
Rubber Deflector Assembly No. 135-2160 44
Drive Wheel Assembly 46
Caster Wheel Assembly 48
Attachments and Accessories 50

© 2024—The Toro® Company
8111 Lyndale Avenue South
Bloomington, MN 55420

Contact us at www.Toro.com.
Printed in the USA.
All Rights Reserved

Deck Lift Assembly

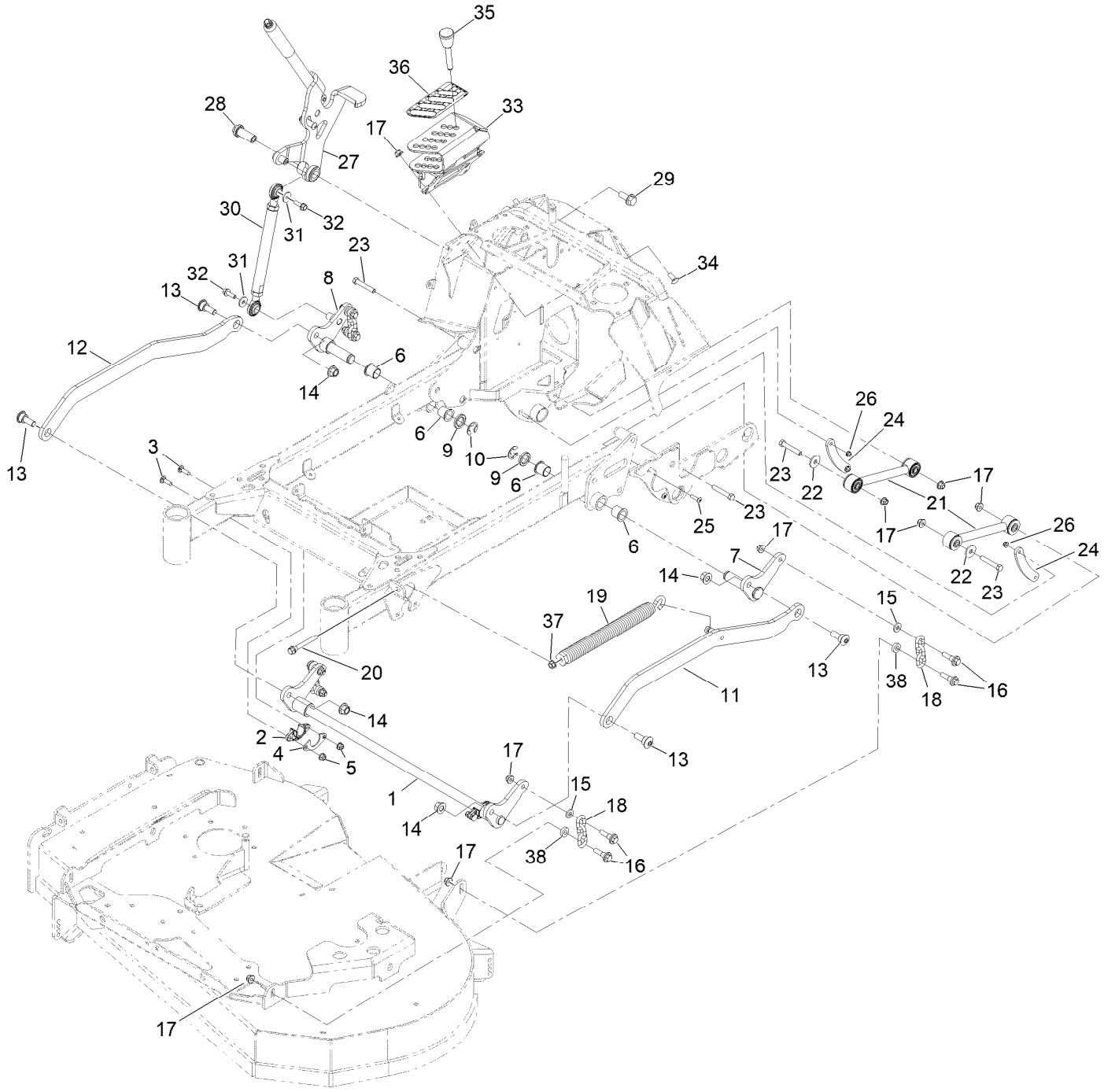

Deck Lift Assembly (continued)

Ref.	Part Number	Qty.	Description
1	142-2566-03	1	Weld, HOC Lift Shaft
2	139-5872	2	Bearing-Flange
3	3230-2	4	Bolt-CARR
4	116-2887	2	Gusset-Lift, Deck
5	104-8300	4	Nut-HF, NI
6	135-1248	4	Bushing, Igus
7	142-4524-03	1	Weld, Bellcrank, Lt Rr
8	142-2570-03	1	Weld, Bellcrank, Rt Rr
9	142-3444	2	Spacer, HOC Pivot
10	32151-103	2	Ring-Retaining, EXT
11	142-4521-03	1	Weld, Lift Strap, Lt
12	142-4522-03	1	Strap, Lift Rt
13	135-1259	4	Bolt, Shoulder
14	99-5107	4	Nut-Lock
15	43-0940	4	Spacer
16	130-0742	8	Bolt-Shoulder
17	104-8301	15	Nut-HF, NI
18	103-9859	4	Chain-Decklift
19	116-0886	1	Spring-Extension
20	92-7674	1	Bolt-Shoulder
21	142-2588	2	ASM, Strut W/ Bushings
22	2844	2	Washer
23	104-3396	4	Screw-HH
24	142-2772	2	Strip, Rub
25	32105-32	4	Screw-TTH
26	104-7201	4	Nut-HF, NI
27	142-2579	1	ASM, HOC Lever
28	142-2181	1	Pivot, HOC Lever
29	3234-38	1	Screw-HHF
30	142-2581	1	ASM, Lift Rod
31	1-603716	2	Washer-Friction
32	115-5142	2	Screw-HHF
33	146-3498-03	1	Weld, HOC Index
34	3231-27	3	Screw-CARR
35	126-5401	1	Pin-HOC
36	142-3087	1	Decal-Height Of Cut
37	3290-357	1	Nut-HSF
38	5-0652	4	Spacer

Height-of-Cut Lever No. 142-2579

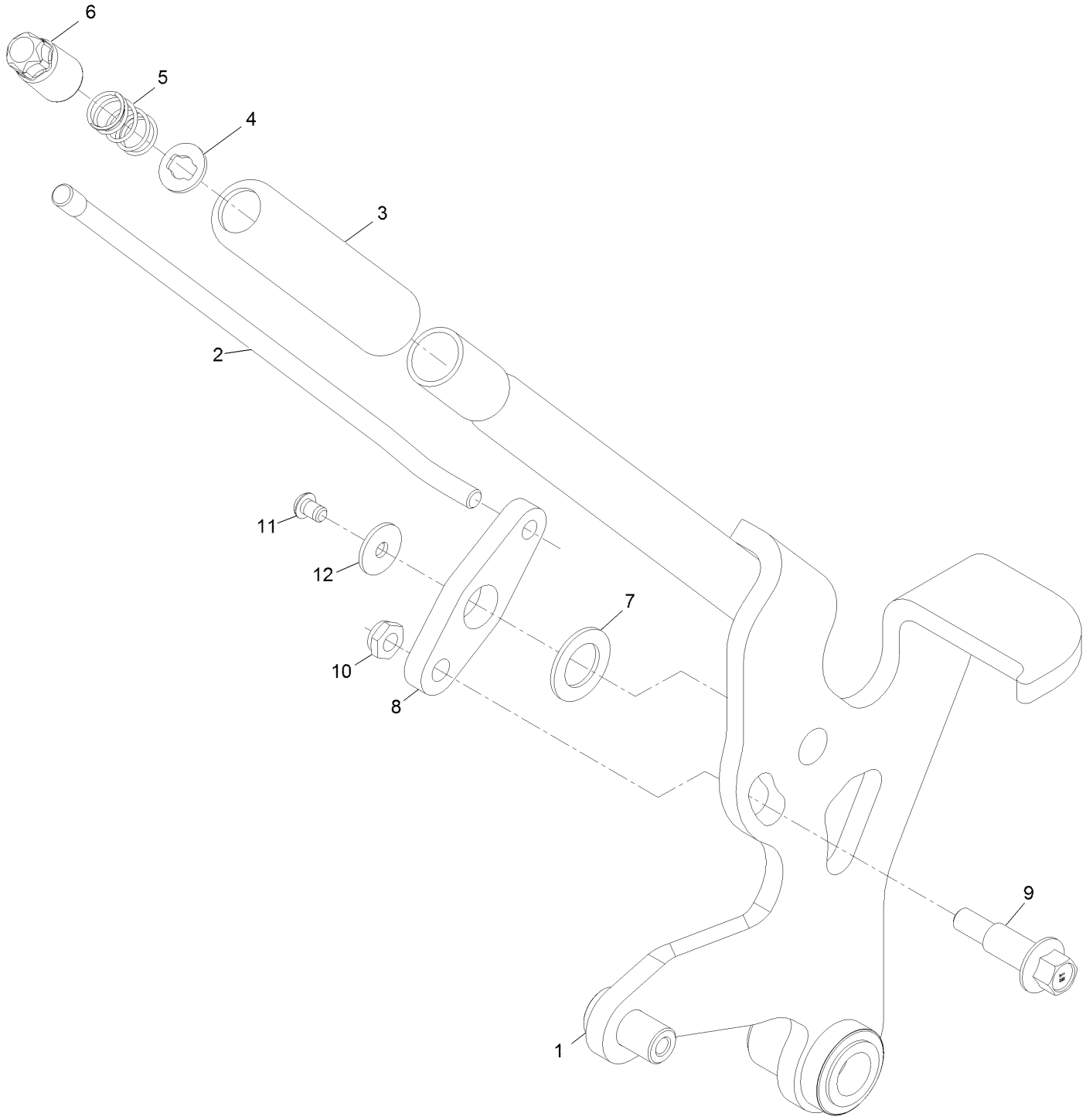

Height-of-Cut Lever No. 142-2579 (continued)

Ref.	Part Number	Qty.	Description
1	142-2577	1	ASM, Lever W/ Bushings
2	142-3358	1	Linkage, HOC Lever
3	115-3592	1	Grip
4	114-1207	1	Washer-Special
5	114-8187	1	Spring-Compression
6	135-7809	1	Button, Push
7	126-7888	1	Washer-Nylon
8	142-2578	1	Arm, Transport
9	142-4197	1	Screw-Bh
10	3296-59	1	Nut-Nyloc 3/8-16 Thin
11	142-2216	1	Screw-Bht
12	3256-67	1	Washer

Lift Rod Assembly No. 142-2581

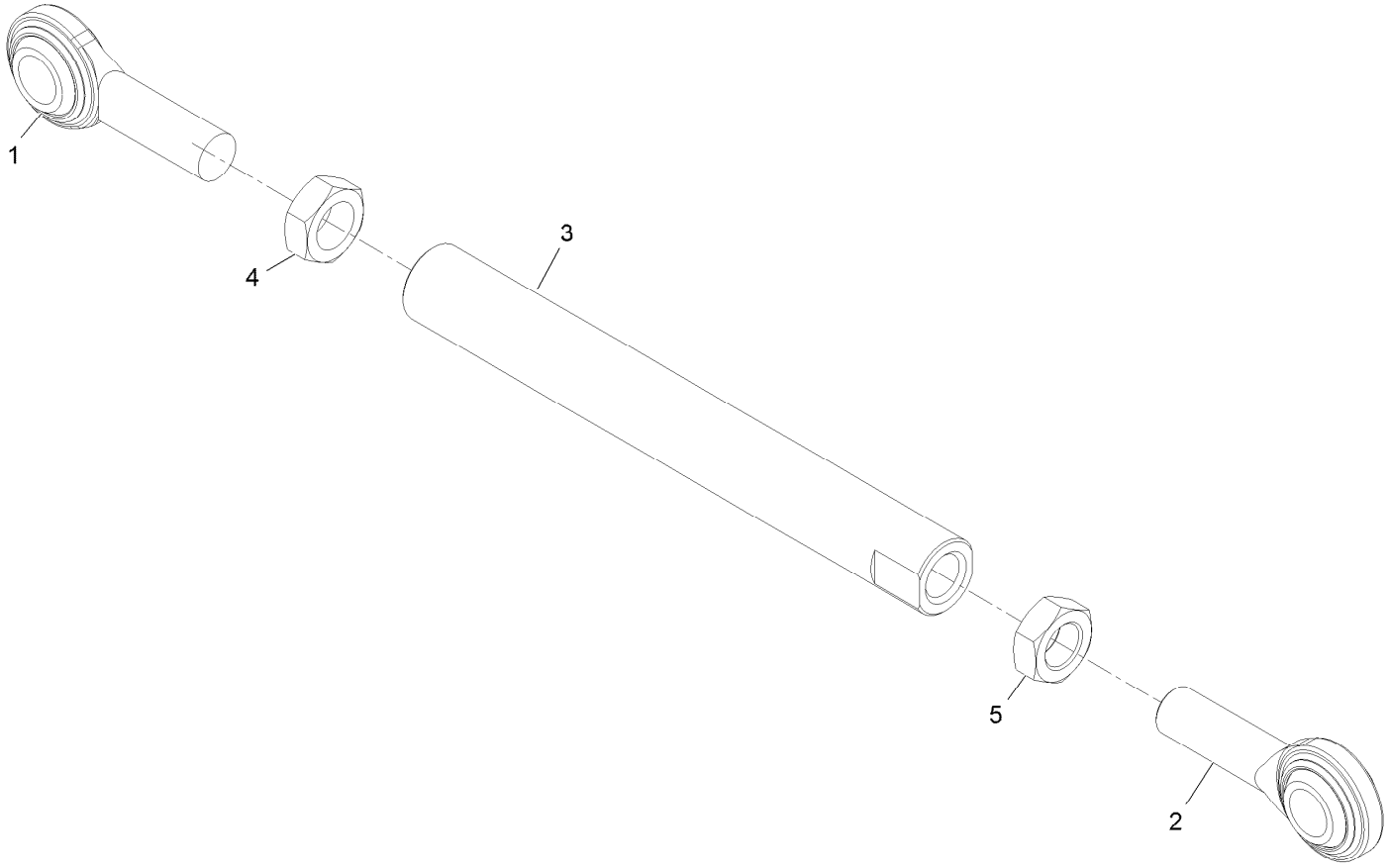

Lift Rod Assembly No. 142-2581 (continued)

Ref.	Part Number	Qty.	Description
1	1-633029	1	Balljoint
2	117-5291	1	Balljoint-Spherical
3	142-2580	1	Rod, Lift
4	3220-6	1	Nut-Jam
5	117-5293	1	Nut-Jam

Frame Assembly

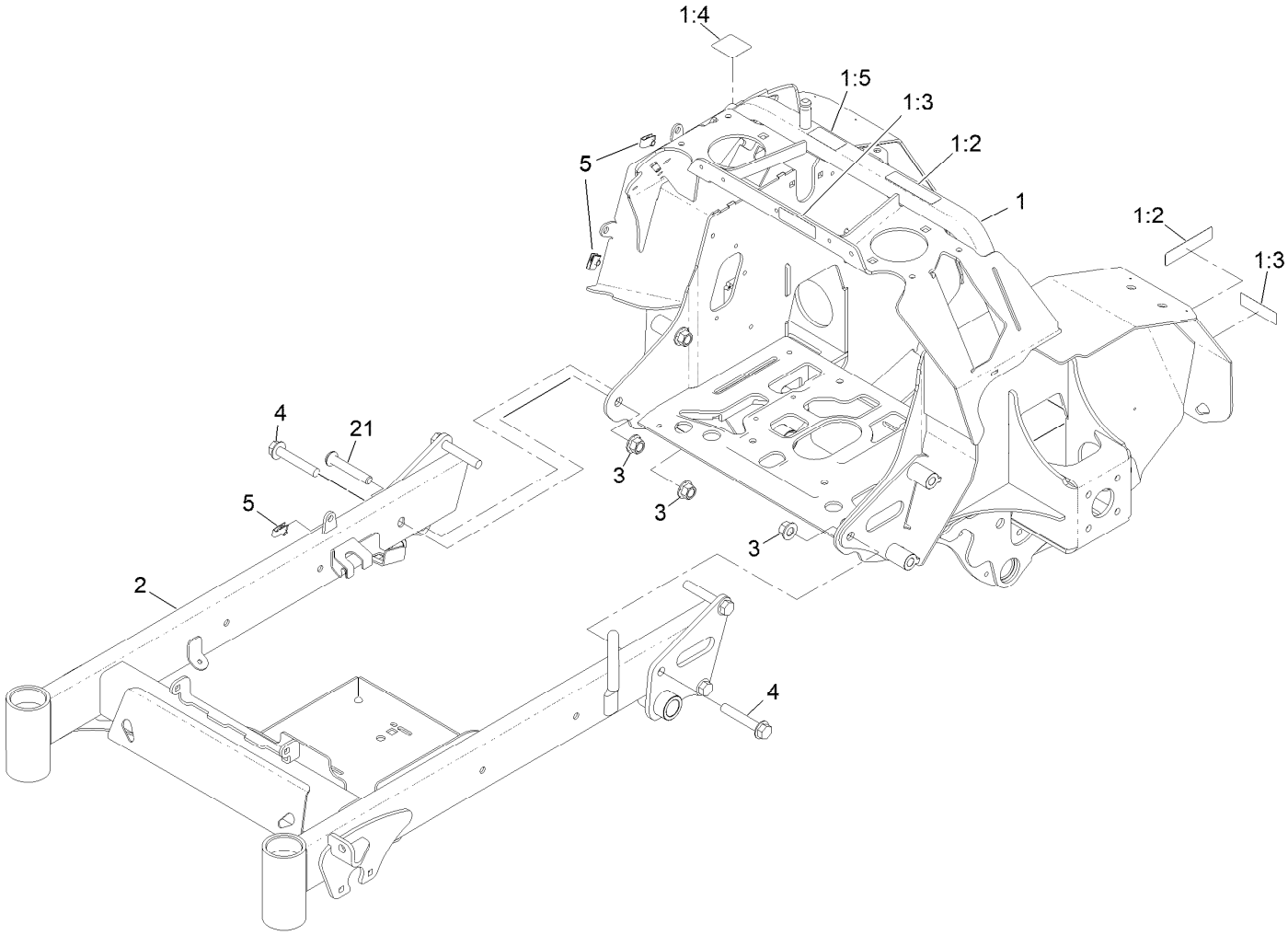

Frame Assembly (continued)

Ref.	Part Number	Qty.	Description
1	146-2773	1	ASM, Rear Frame W/ Decals
1:2	98-1977	2	Decal-Warning
1:3	116-8559	2	Decal, Cover Missing
1:4	116-5988	1	Decal-Park Brake, CE
1:5	135-2267	1	Decal-Belt Routing HYD
2	146-5200	1	ASM-Front Frame W/Decal
3	99-5107	6	Nut-Lock
4	3234-40	5	Screw-HF
5	107069	3	Clip
21	142-3783	1	Screw, HSBH

Park Brake Assembly

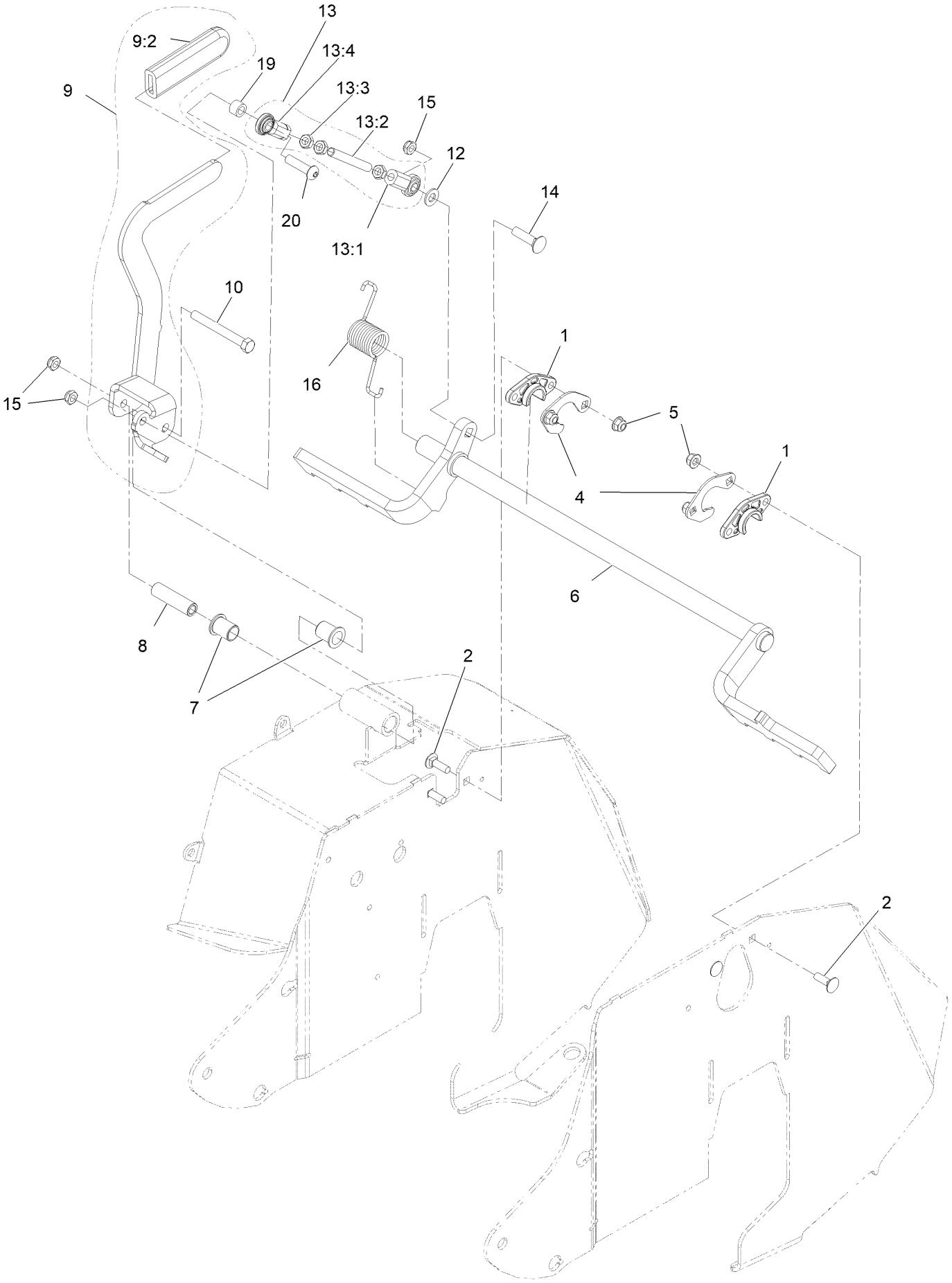

Park Brake Assembly (continued)

Ref.	Part Number	Qty.	Description
1	139-5872	2	Bearing-Flange
2	3230-2	4	Bolt-CARR
4	135-7867	2	Support, Bearing
5	104-8300	4	Nut-HF, NI
6	135-1950-03	1	Wld-Brake Shaft 32/36
7	138-2573	2	Bushing-Flange
8	142-2558	1	Spacer, Brake Pivot
9	142-2560	1	ASM, Lever W/ Grip
9:2	1-633268	1	Grip-Lever
10	112-7161	1	Screw-HH
12	3256-24	1	Washer-Plain
13	142-2562	1	ASM, Brake Link
13:1	103-0608	1	Joint-Ball, End
13:2	142-4034	1	Linkage, Brake
13:3	3220-3	3	Nut-HJ
13:4	103-1167	1	Joint-Ball End, LH
14	3231-4	1	Screw-CARR
15	3296-59	3	Nut-Lock, NI
16	108-4052	1	Spring-Torsion
19	142-4035	1	Spacer
20	95-3857	1	Screw-HSBH

Platform Assembly

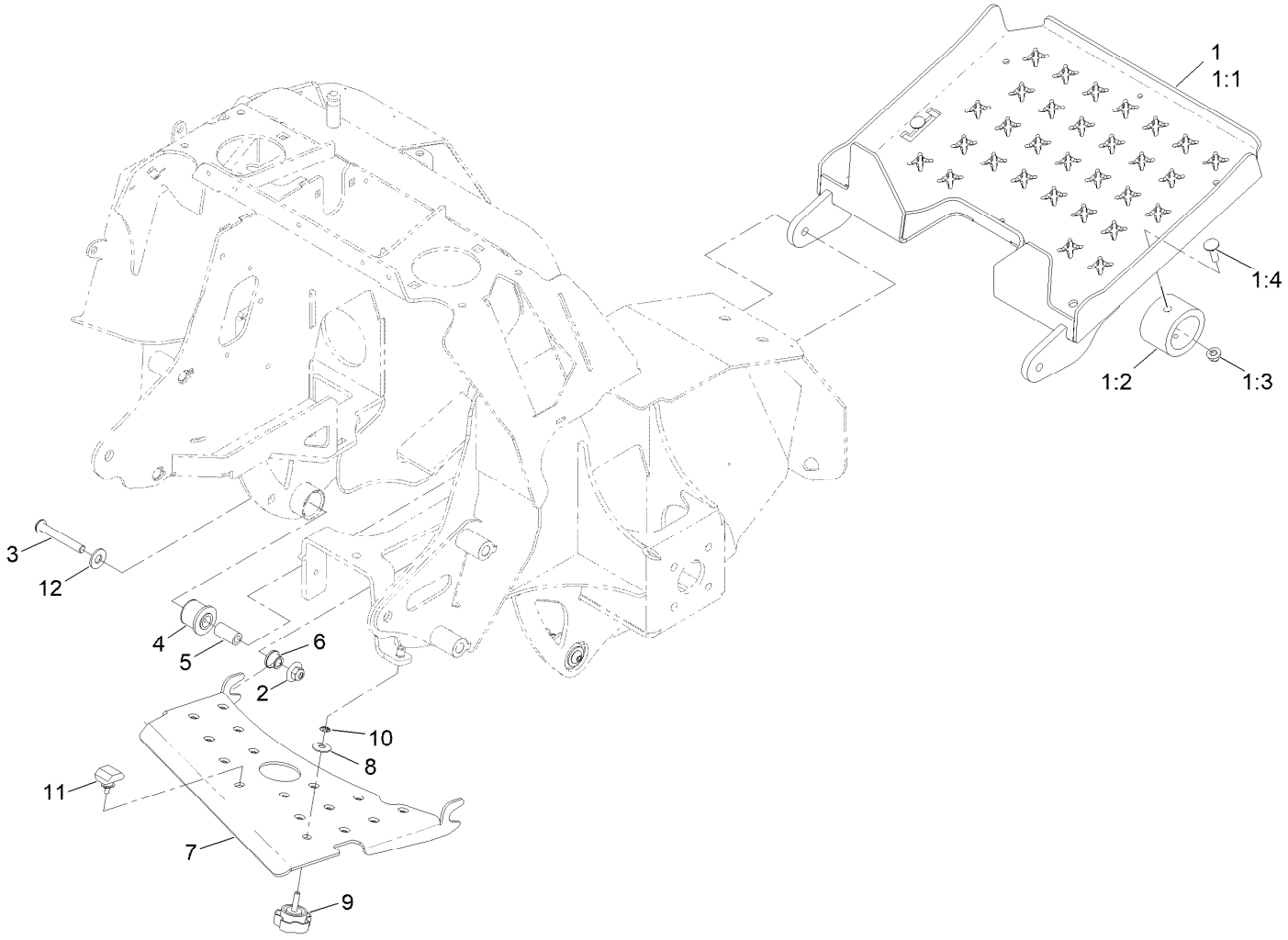

Platform Assembly (continued)

Ref.	Part Number	Qty.	Description
1	142-2710	1	ASM-Platform
1:1	142-2470-05	1	Weld-Platform [blk-Txt]
1:2	135-2548	2	Bumper-Isolator
1:3	104-8300	2	Nut-HF, NI
1:4	3230-2	2	Bolt-CARR
2	109-6658	2	Nut-Flange, NI
3	135-7158	2	Screw-HSBH
4	126-8360	2	Bushing-Rubber, Suspension
5	108-6544	2	Spacer
6	109-8788	2	Bushing-Flanged
7	142-2590-03	1	Deflector, Air, 36
8	3290-456	1	Washer-Belleville
9	135-7382	1	Knob
10	1-803037	1	Nut-Retaining
11	126-9966	1	Bumper-ROPS
12	3256-4	2	Washer-Flat

Hydraulic Assembly

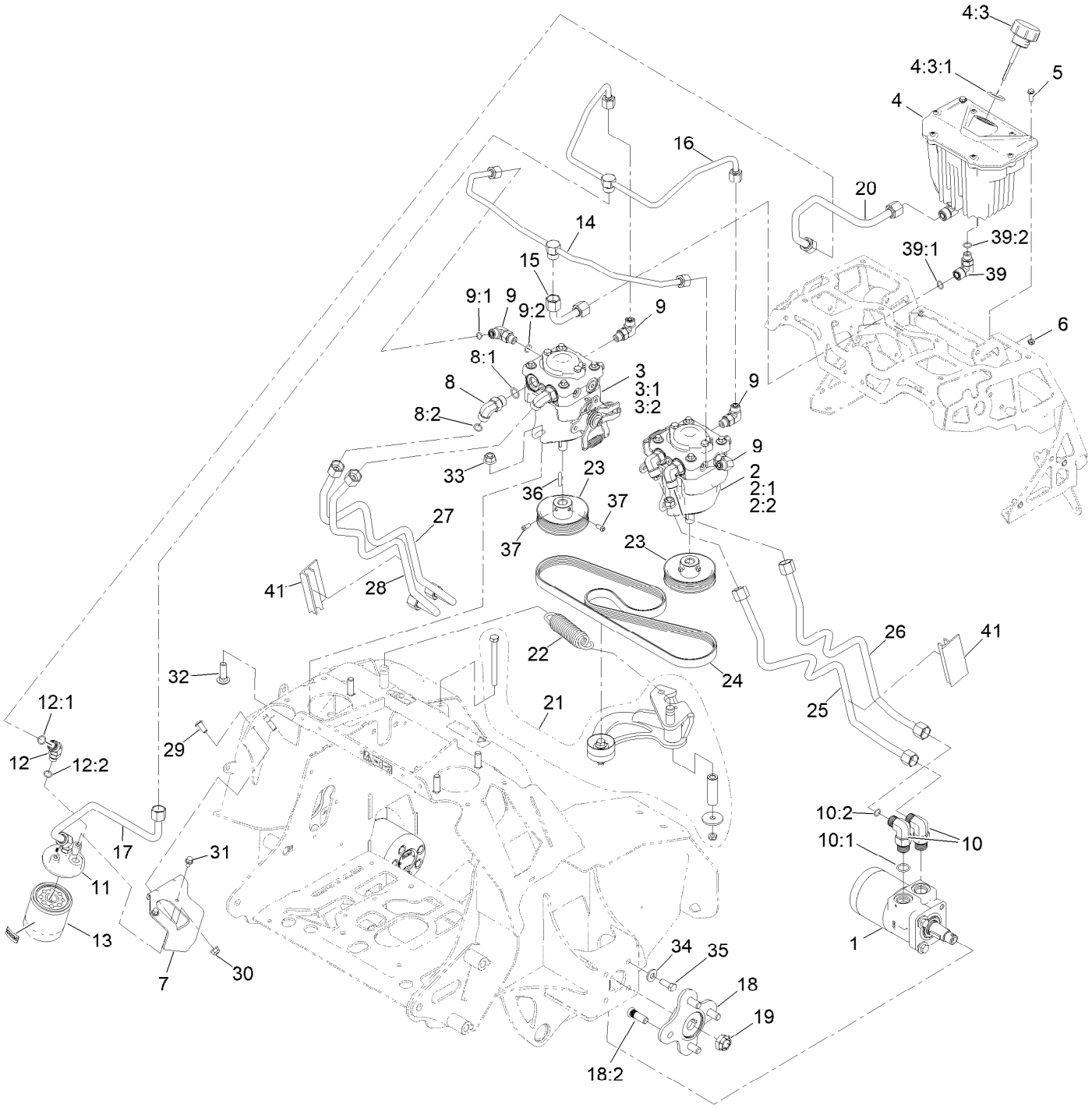

Hydraulic Assembly (continued)

Ref.	Part Number	Qty.	Description
1	135-1274	2	Motor-Wheel
2	135-2212	1	Pump-Hydraulic 10Cc
2:1	126-2479	1	Kit, 10Cc/12Cc Pump Kit
2:2	105-6184	1	Seal Overhaul Kit
3	135-2211	1	Pump-Hydraulic 10Cc
3:1	126-2479	1	Kit, 10Cc/12Cc Pump Kit
3:2	105-6184	1	Seal Overhaul Kit
4	161-6800	1	Hydraulic Reservoir ASM
4:3	142-2793	1	Cap, Hydraulic
4:3:1	142-2792	1	O-Ring
5	32105-15	2	Screw-HWH
6	3296-56	2	Nut-Lock, NI
7	142-2592-03	1	Mount, Filter
8	340-98	4	Fitting-Elbow, 90 DEG
8:1	237-79	1	O-Ring
8:2	237-30	1	O-Ring
9	340-77	4	Fitting-Elbow, 90 DEG
9:1	237-22	1	O-Ring
9:2	237-42	1	O-Ring
10	340-105	4	Fitting-Elbow, 90 DEG
10:1	237-80	1	O-Ring
10:2	237-30	1	O-Ring
11	103-2888	1	Head-Filter
12	340-96	2	Adapter
12:1	237-30	1	O-Ring
12:2	237-42	1	O-Ring
13	114-3494	1	Element-Filter, 25 Micron
14	135-7056	1	Line, Hydraulic, Case Tee
15	135-7054	1	Line, Hydraulic, Case
16	135-7055	1	Line, Hydraulic, Charge Tee
17	142-2594	1	Line, HYD. Charge
18	135-1621	2	ASM-Hub And Studs
18:2	116-1696	4	Stud-Wheel
19	116-2839	2	Nut-Lock
20	142-2593	1	Line, HYD. Supply
21	135-1270	1	ASM, Idler Arm
22	135-1272	1	Spring, Extension
23	142-2968	2	Pulley, Pvk5
24	146-4642	1	Belt Pvk5
25	142-5632	1	Kit-Ste HYD Line Lt Rear B-A
26	142-5633	1	Kit-Ste HYD Line Lt Frnt A-B
27	142-5634	1	Kit-Ste HYD Line Rt Rear B-B
28	142-5635	1	Kit-Ste HYD Line Rt Frnt A-A
29	126-6268	2	Screw-TTH
30	104-8300	2	Nut-HF, NI
31	3234-13	2	Screw-HHF
32	3232-3	4	Bolt-CARR
33	114-8417	4	Nut-HF, NI
34	98-5975	8	Washer-Belleville
35	323-6	8	Screw-HH
36	135-7971	2	Key
37	3241-7	4	Screw-SQH ■
39	340-99	2	Fitting-HYD, 90 DEG
39:1	237-30	1	O-Ring
39:2	237-42	1	O-Ring
41	142-4399	2	Spacer-Hydraulic Tube
99	105-6184	1	Seal Overhaul Kit ●
99	126-2479	1	Kit, 10Cc/12Cc Pump Kit ●
99	133-1779	1	Seal Kit ●

● Not illustrated
■ Use Pro-Lock, Nut Type (P/N 1-840022, .5ml tube) on threads.

Idler Arm Assembly No. 135-1270

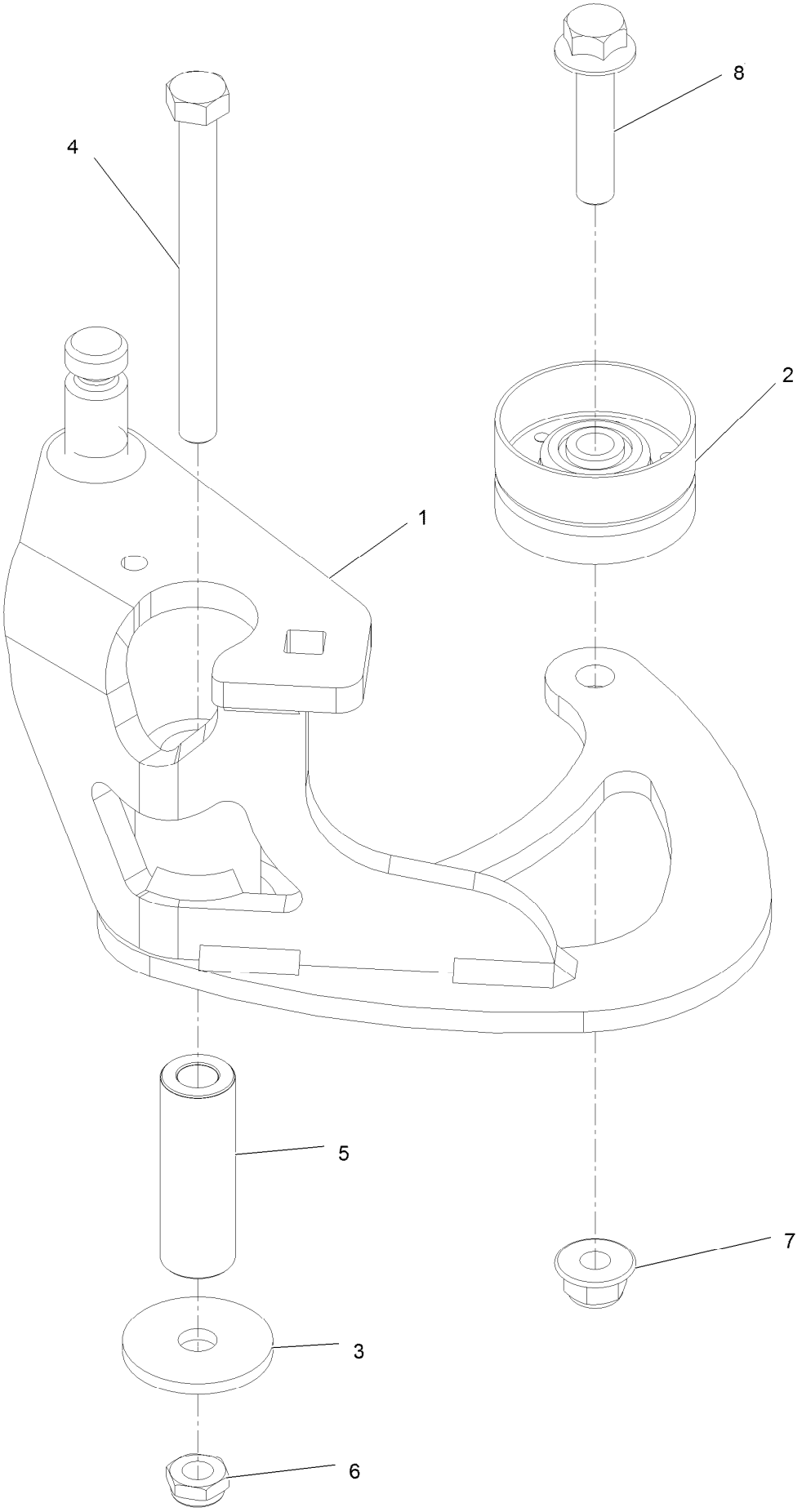

Idler Arm Assembly No. 135-1270 (continued)

Ref.	Part Number	Qty.	Description
1	135-2238	1	ASM, Idler Arm W/ Bushings
2	135-1199	1	Idler, Flat
3	1-213069	1	Washer
4	323-16	1	Screw-HH
5	135-1273	1	Tube, Idler Pivot
6	3296-59	1	Nut-Lock, NI
7	104-8301	1	Nut-HF, NI
8	3234-19	1	Screw-HHF

Engine Assembly

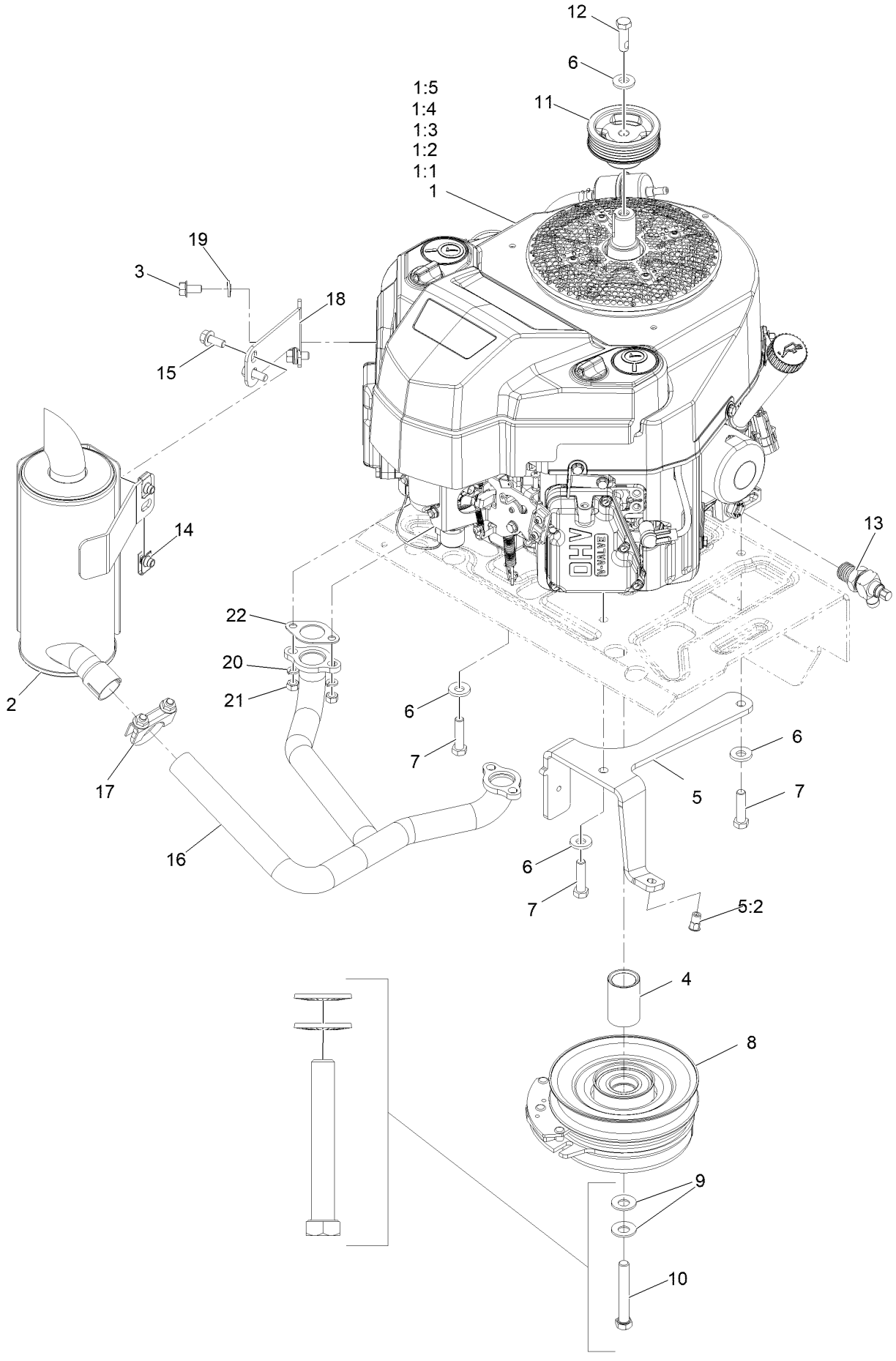

Engine Assembly (continued)

Ref.	Part Number	Qty.	Description
1		1	Engine-Kawasaki Fs600 ■▲
1:1		1	Filter-Oil ■▲
1:2		1	Filter-Fuel ■▲
1:3		1	Plug-Spark ■▲
1:4		1	Filter-Air, Foam ■▲
1:5		1	Filter-Air, Paper ■▲
2	135-5025	1	Muffler-Vertical Ka
3	33104-016	2	Screw-HHF
4	135-5028	1	Spacer-Clutch
5	135-6711	1	ASM-Clutch Anchor W/Insert
5:2	138-2758	1	Nut-Clinch,Hex
6	98-5975	5	Washer-Spring Disc 3/8
7	323-8	4	Screw-HH 3/8-16 X 1 1/2
8	142-3586	1	Clutch 105
9	1-603610	2	Washer-Spring Disc 7/16
10	126-7198	1	Screw-HH 7/16-20 X 3 W/Loctite ◆
11	135-1198	1	Pulley, Crank
12	135-7890	1	Screw-HH, Patch,
13	135-2660	1	Drain-Oil Valve ●
14	94-2413	2	Nut-U 5/16-18
15	3234-5	2	Screw-HH Flg 5/16-18 X 3/4
16	135-5026	1	Manifold-Vertical Ka Exh
17	104-4090	1	Clamp-Muffler
18	135-3828-03	1	Bracket-Muffler Vertical
19	3253-21	2	Washer-Lock 3/8
20	114-3550	4	Washer-Spring Lock M8
21	114-3549	4	Nut-M8
22	1-653313	2	Gasket-Exhaust

● Torque to 23-29 ft-lb
▲ Obtain parts from www.kawpower.com
◆ Use Pro-Lock, Nut Type (P/N 1-840022, .5ml tube) on threads.
■ Not serviced separately

Motion Control Assembly

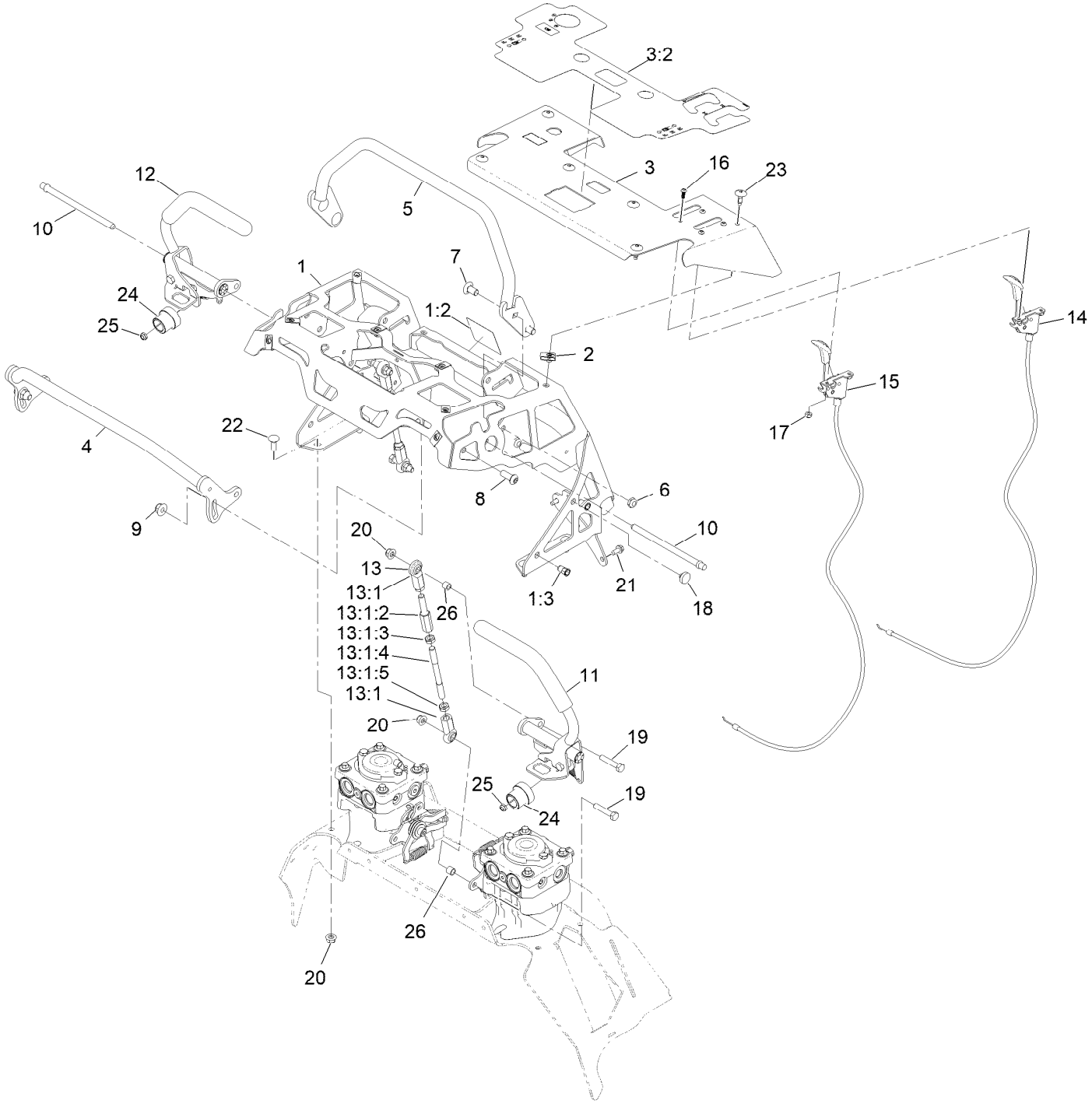

Motion Control Assembly (continued)

Ref.	Part Number	Qty.	Description
1	146-2939	1	ASM-Ctrl Tower
1:2	142-3077	1	Decal-HYD Fluid Warn
1:3	138-2758	2	Nut-Clinch,Hex
2	107069	8	Clip
3	146-2936	1	ASM, Control Panel W/ Decals
3:2	135-6773	1	Decal-Control Panel Non-EFI
4	135-3432-05	1	Weld, Front Ref Bar
5	135-3430-05	1	Weld, Rear Ref Bar
6	3296-59	4	Nut-Lock, NI
7	3231-21	4	Screw-CARR
8	3274-94	2	Screw-HSBH
9	104-8301	2	Nut-HF, NI
10	135-1277	2	Pin, Pivot
11	135-1304	1	ASM, Motion Control, Lt
12	135-1305	1	ASM, Motion Control, Rt
13	135-7116	2	ASM, Linkage
13:1		1	ASM, Motion Control Link ●
13:1:2	116-4755	1	Rod-Adjustment
13:1:3	3220-16	1	Nut-Hex Jam, LH
13:1:4	135-1291	1	Link, Motion Control
13:1:5	3220-3	1	Nut-HJ
14	135-2168	1	Control, Choke
15	135-2169	1	Control, Throttle
16	135-3176	4	Screw, BHCS
17	3296-2	4	Nut-Lock, NI
18	1-513658	2	Bumper
19	322-8	4	Screw-HH
20	104-8300	8	Nut-HF, NI
21	32144-10	4	Screw-HWH
22	3230-16	4	Screw-CARR
23	135-3494	6	Screw, Torx
24	126-1499	2	Cam
25	3296-56	2	Nut-Lock, NI
26	1-633545	4	Spacer

● Not serviced separately

Left Motion Control Assembly No. 135-1304

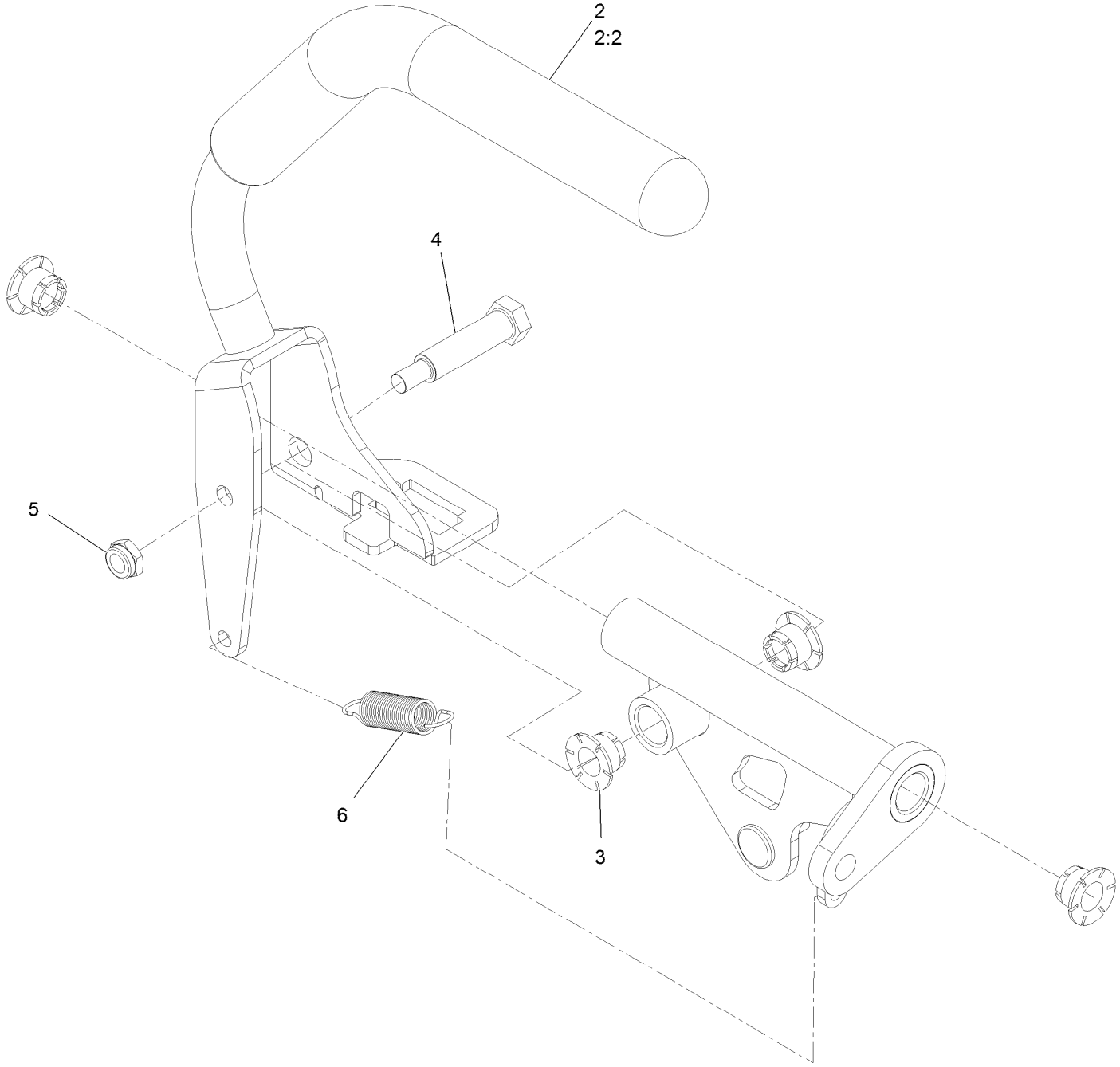

Left Motion Control Assembly No. 135-1304 (continued)

Ref.	Part Number	Qty.	Description
2	135-2546	1	ASM, Lt Control Lever W/ Grip
2:2	135-3301	1	Grip, Drive Lever
3	135-6412	4	Bearing, Igus
4	121-1229	1	Bolt-Shoulder
5	3296-56	1	Nut-Lock, NI
6	114-0249	1	Spring-Extension

Right Motion Control Assembly No. 135-1305

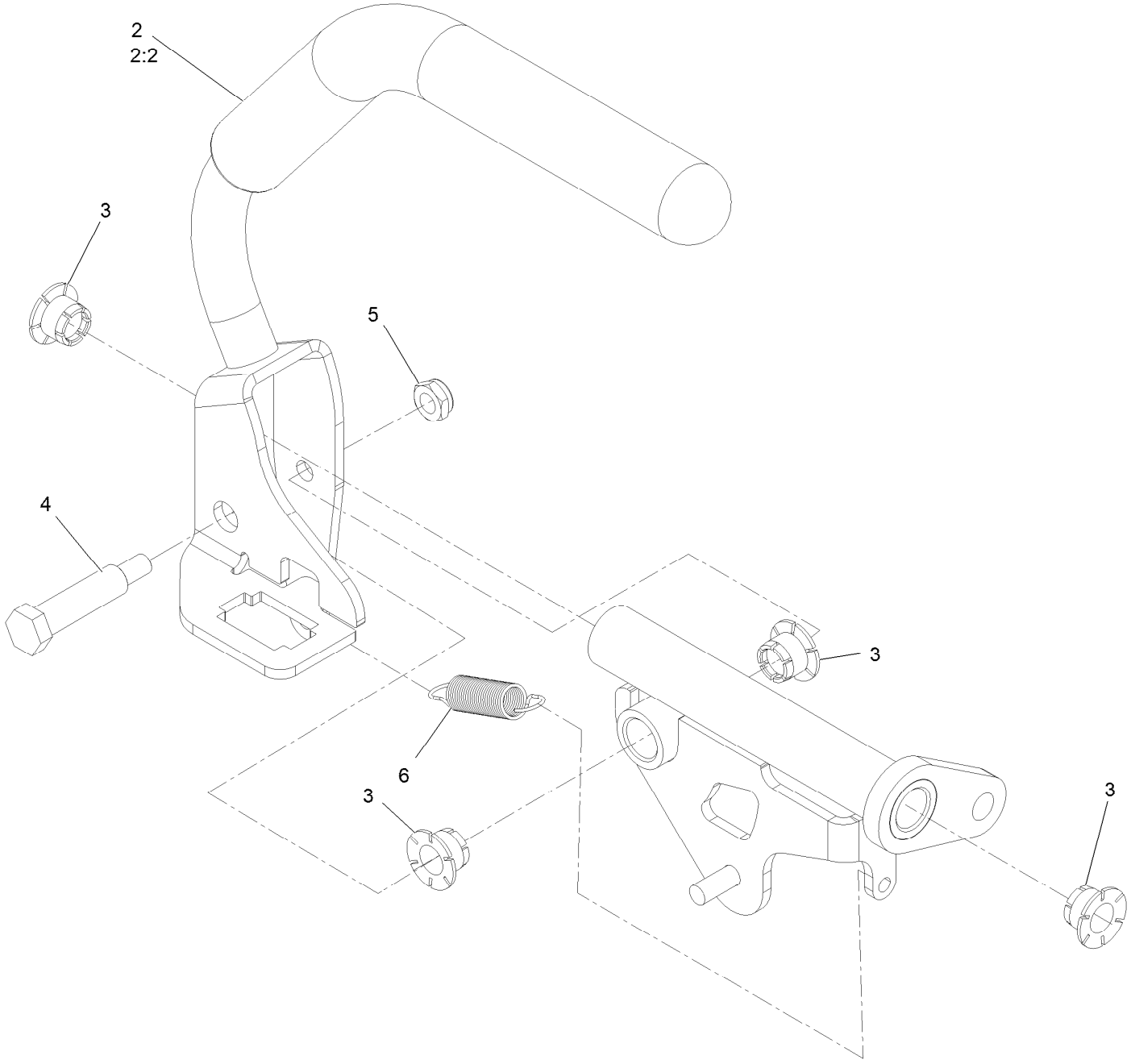

Right Motion Control Assembly No. 135-1305 (continued)

Ref.	Part Number	Qty.	Description
2	135-2547	1	ASM, Rt Control Lever W/ Grip
2:2	135-3301	1	Grip, Drive Lever
3	135-6412	4	Bearing, Igus
4	121-1229	1	Bolt-Shoulder
5	3296-56	1	Nut-Lock, NI
6	114-0249	1	Spring-Extension

Fuel Assembly

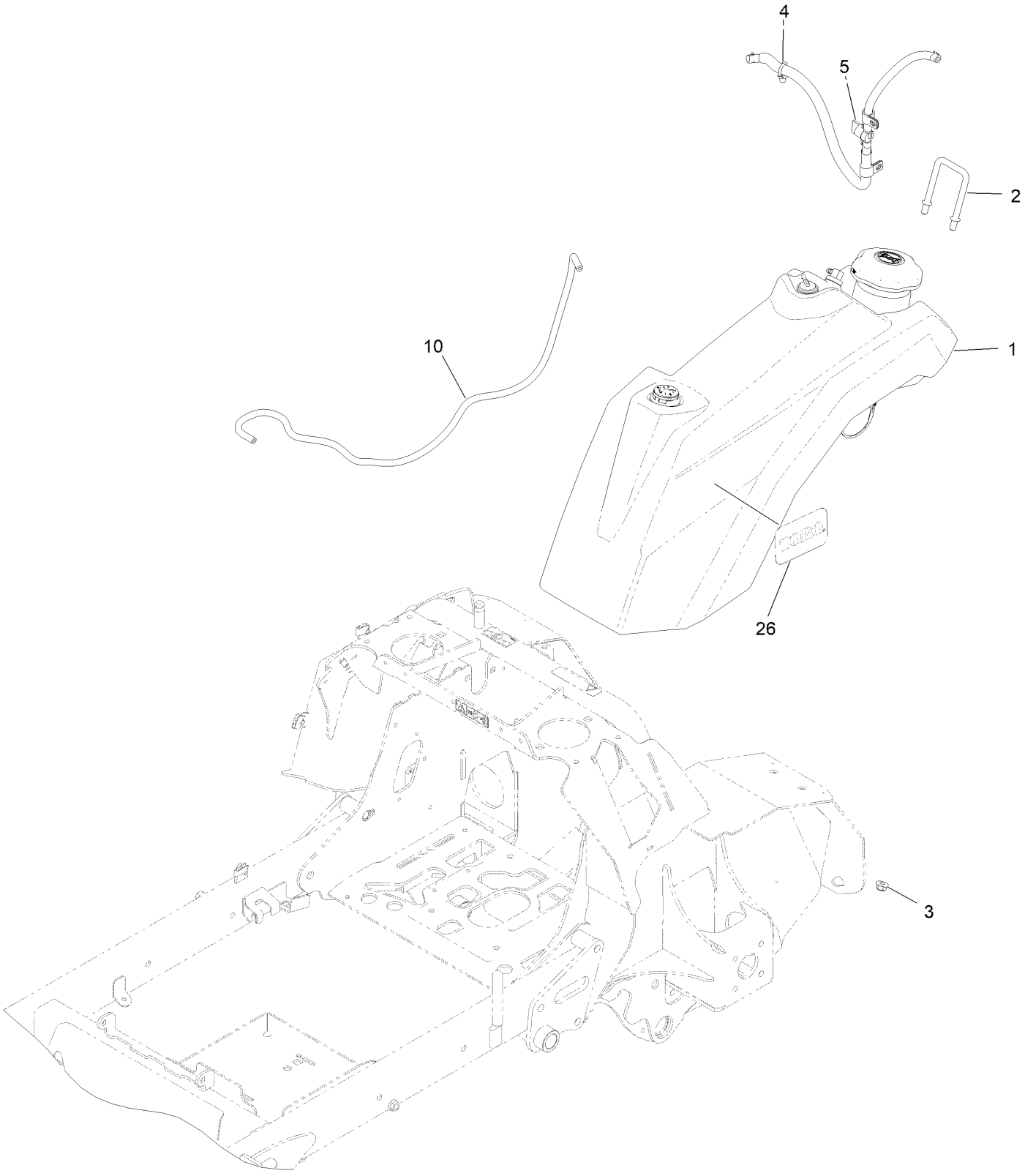

Fuel Assembly (continued)

Ref.	Part Number	Qty.	Description
1	161-6672	1	ASM-Fuel Tank
2	135-1921	1	Clamp, Tank
3	104-8301	2	Nut-HF, NI
4	32180-030	1	Clip-Tie
5	142-3596	1	ASM-Fuel Line & Valve
10	110-3958	1	Hose-Fuel
26	161-6663	1	Decal-Toro Logo

Fuel Line and Valve Assembly No. 142-3596

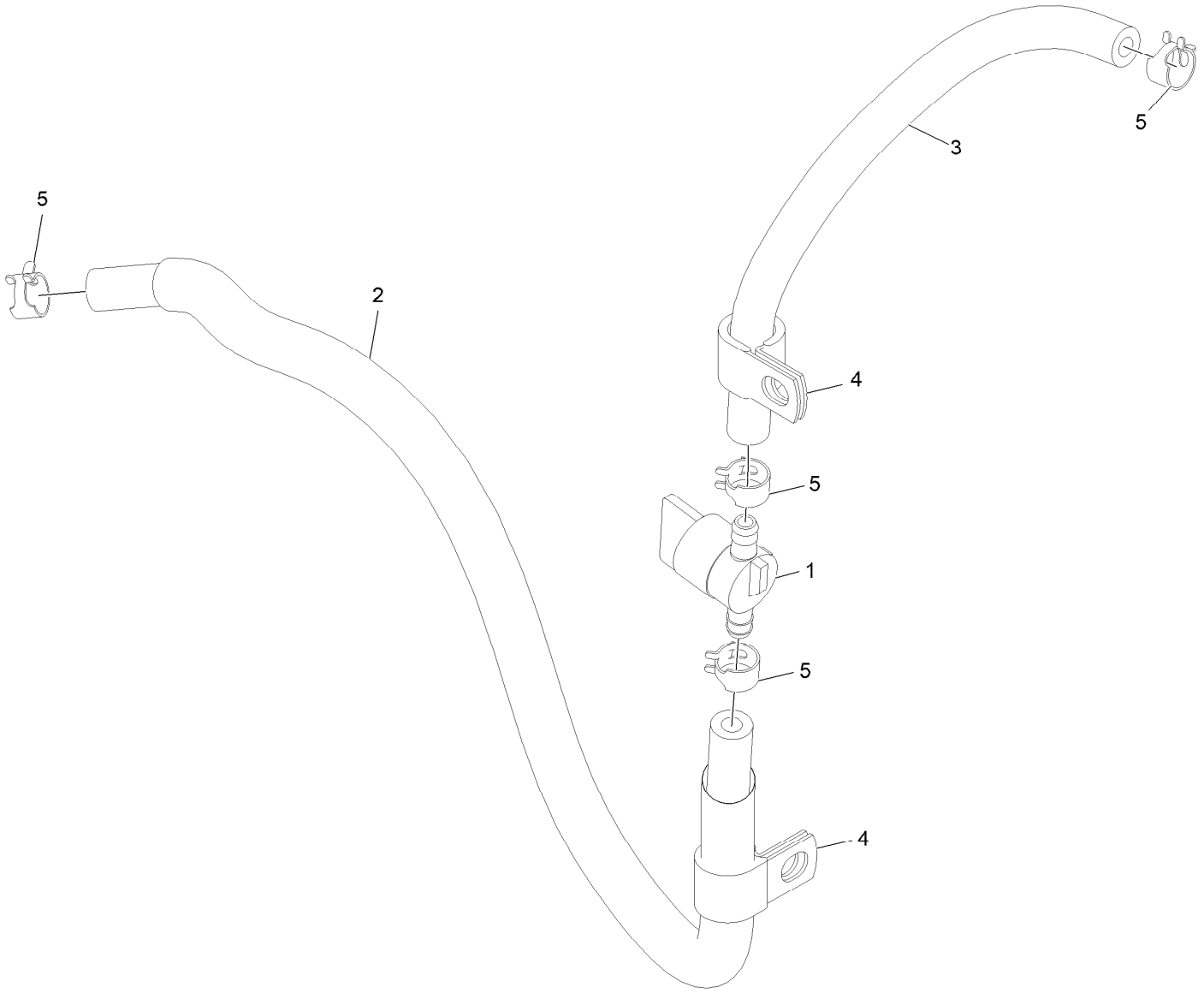

Fuel Line and Valve Assembly No. 142-3596 (continued)

Ref.	Part Number	Qty.	Description
1	1-603770	1	Valve-Fuel
2	109-0298	1	Line-Fuel
3	109-0293	1	Hose-Fuel
4	92-6064	2	Clamp-R
5	2412-98	4	Clamp-Hose

Electrical Assembly

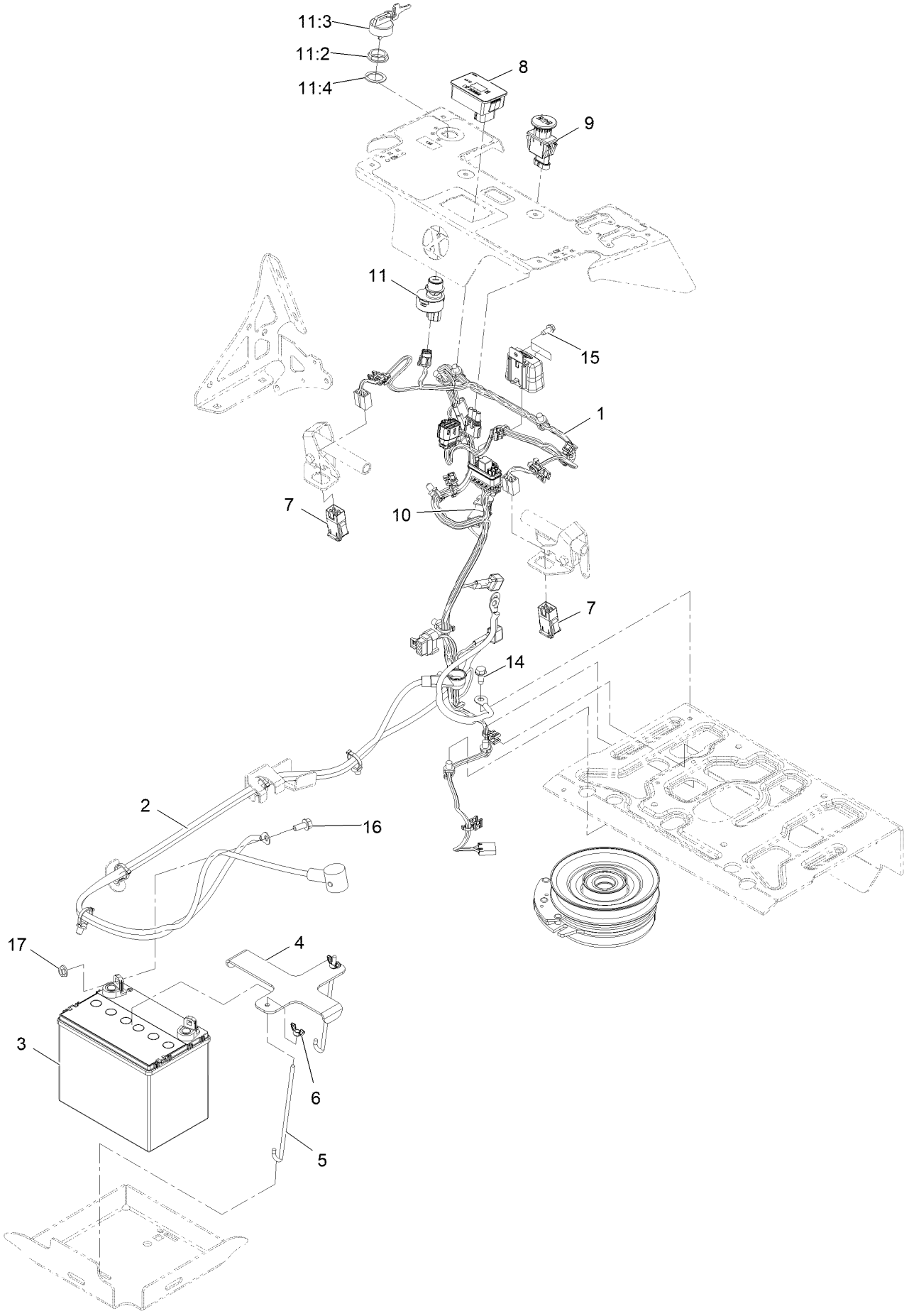

Electrical Assembly (continued)

Ref.	Part Number	Qty.	Description
1	142-2926	1	Harness-Wiring ■
2	135-2255	1	Harness-Battery
3	99-7421	1	Battery- Wet, 12V, 300 CCA
4	135-2056	1	Bracket, Battery Hold Down
5	1-633651	2	Bolt-Holddown
6	1-543792	2	Wingnut-Nyloc 1/4-20
7	104-3338	2	Switch-Delta
8	135-7189	1	Module-Hour Meter
9	126-6187	1	Switch-PTO, Sealed
10	82-2190	1	Switch
11	126-6285	1	Ignition Switch ASM
11:2	108-8660	1	Nut-Mounting
11:3	106-5270	1	Ignition Key Set
11:4	108-8659	1	Washer-Backup
14	32144-11	1	Screw-HWH 5/16-18 X 3/4 Tf
15	32144-10	1	Screw-HWH 1/4-20 X .62
16	3234-5	2	Screw-HH Flg 5/16-18 X 3/4
17	32128-20	2	Nut-Whizlock 5/16-18 ●

● Not illustrated
■ Use dielectric grease on all unsealed connectors and terminals only. Do not apply in sealed connectors.

Harness Assembly No. 142-2926

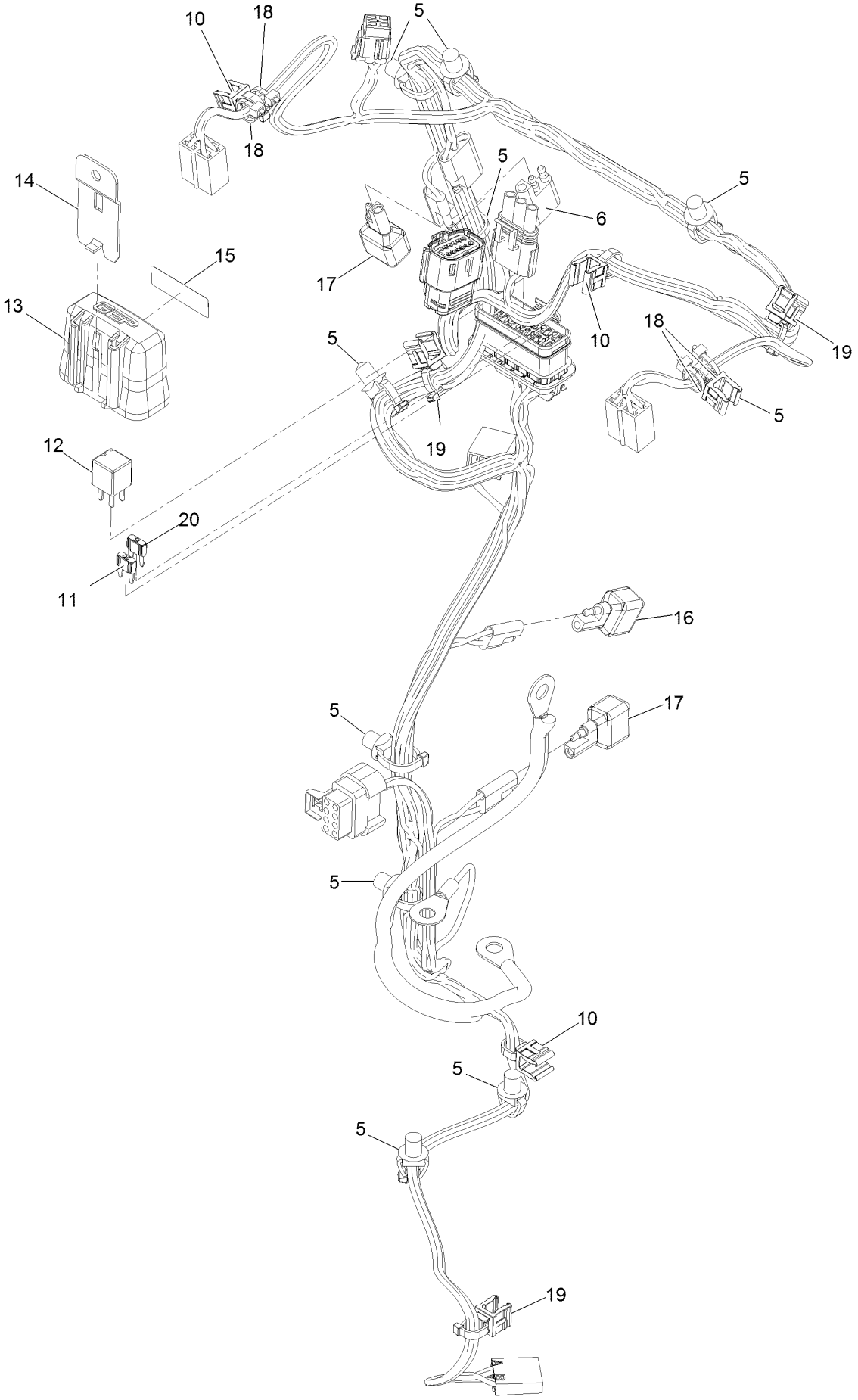

Harness Assembly No. 142-2926 (continued)

Ref.	Part Number	Qty.	Description
5	32180-030	9	Clip-Tie
6	32180-197	1	Cap-Plug
10	32180-078	4	Clip-Edge
11	121-8868	1	Fuse-Mini Blade, 20 Amp
12	126-3991	1	Relay-Micro
13	32180-176	1	Cover-Block, Fuse
14	32180-177	1	Clip-Mounting
15	126-7875	1	Decal-Fuse
16	103-3895	1	Diode
17	100-4918	2	Diode
18	1-303287	7	Tie-Cable
19	32180-082	3	Clip-Edge W/Tie, Perpendicular
20	121-8867	1	Fuse-Mini Blade, 15 Amp

Guarding Assembly

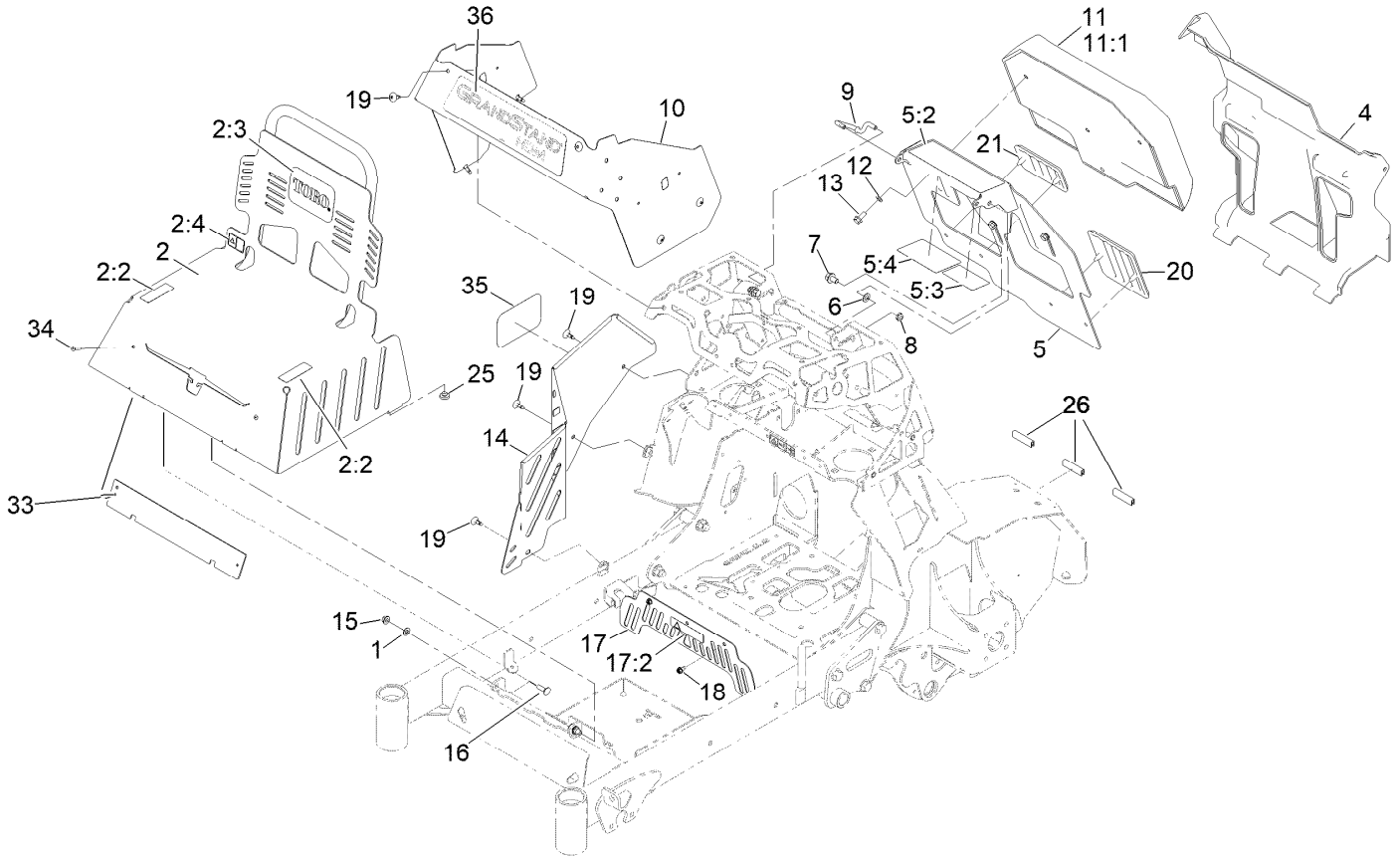

Guarding Assembly (continued)

Ref.	Part Number	Qty.	Description
1	93-6079	2	Spacer-Nylon
2		1	Engine Guard W/Decals ●
2:2	136-1672	2	Decal-No Step/Riders
2:3	105-8278	1	Decal
2:4	106-5517	1	Decal-Warning
4	142-3523	1	Cover-Rear Ste
5	135-2601	1	ASM, Pad Backing W/ Decals
5:2	135-2412	1	Decal-Warning
5:3	116-8253	1	Decal-Drive Release
5:4	135-2563	1	Decal-Service Aid Sm
6	131-8667	2	Washer-Thrust
7	3234-9	2	Screw-HHF
8	3296-59	2	Nut-Lock, NI
9	135-1611	1	Rod, Prop
10	146-2751-01	1	Skin Tower
11	161-3555	1	Pad-Thigh
11:1	161-3554	1	Cover Pad
12	3290-475	3	Washer-Belleville
13	100-1668	3	Screw-HHF
14	146-4142-03	1	Cover-Rt Side
15	32128-25	2	Nut-HF
16	3230-2	2	Bolt-CARR
17	135-2204	1	ASM, Belt Guard W/ Decal
17:2	98-1977	1	Decal-Warning
18	32104-17	2	Screw-HWH
19	135-3494	9	Screw, Torx
20	135-5344	1	Pad, Knee, Lt
21	135-5345	1	Pad, Knee, Rt
25	1-513658	2	Bumper
26	142-4759	3	Strip-Seal 2.13
33	161-3528-01	1	Plate-Backer
34	130-8451	2	Rivet-Trifold
35	105-8278	1	Decal
36	161-6662	1	Decal-Gradstand Hdm

● Not serviced separately

36 Inch Deck Assembly

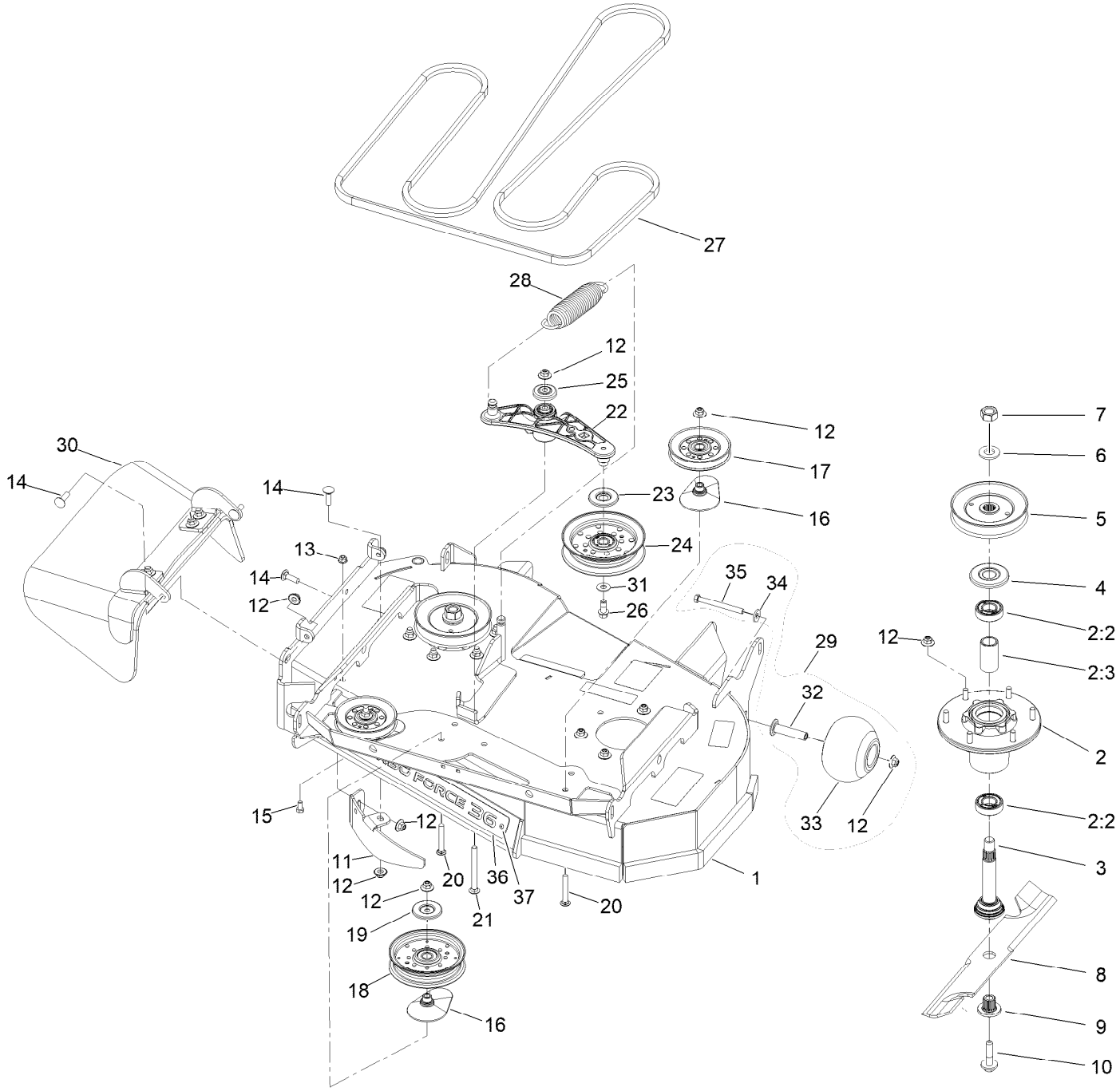

36 Inch Deck Assembly (continued)

Ref.	Part Number	Qty.	Description
1	161-6759	1	ASM-Deck W/Decals
2	116-3344	2	ASM-Cutter Hsg With Bearings
2:2	116-0720	2	Bearing-Ball
2:3	116-3312	1	Spacer-Bearing
3	116-3342	2	ASM-Spindle And Seal
4	116-1286	2	Guard,Bearing Top .989
5	135-4809	2	Sheave-Blade Drive
6	103-2802	2	Washer
7	116-7306	2	Nut-Hex
8	146-3411	2	Blade-High Flow
9	103-3037	2	Bushing, Splined
10	109-9220	2	Screw-Sems
11	126-2783-01	1	Baffle, Dogleg
12	109-6658	21	Nut-Flange, NI
13	104-8300	1	Nut-HF, NI
14	3231-25	4	Bolt-CARR
15	322-2	1	Screw-HH
16	109-2872	3	Spacer-Pulley
17	135-4398	2	Idler - V 4.13 Eod-A
18	126-9187	1	Pulley-Idler, Flat
19	126-8043	1	Shield-Dust
20	3231-31	3	Screw-CARR
21	135-0313	1	Screw-CARR
22	135-1679	1	ASM.-Arm, Idler
23	126-9195	1	Shield-Guard, Dust
24	126-9196	1	Idler-Pulley, Flat
25	103-2916	1	Guard-Top
26	126-1680	1	Screw-HHF
27	135-3214	1	Belt-V
28	116-6317	1	Spring-Extension
29	116-9981	1	Kit, Anti-Scalp Roller
30	135-2160	1	Rubber Deflector ASM
31	3256-4	1	Washer-Flat
32	116-8131	1	Axle, Roller
33	103-8415	1	Roller-Anti-Scalp
34	98-5975	1	Washer-Belleville
35	116-9362	1	Screw-HH
36	161-3535-03	1	Plate-Badge [black]
37	130-8451	2	Rivet-Trifold

Deck Decal Assembly No. 161-6759

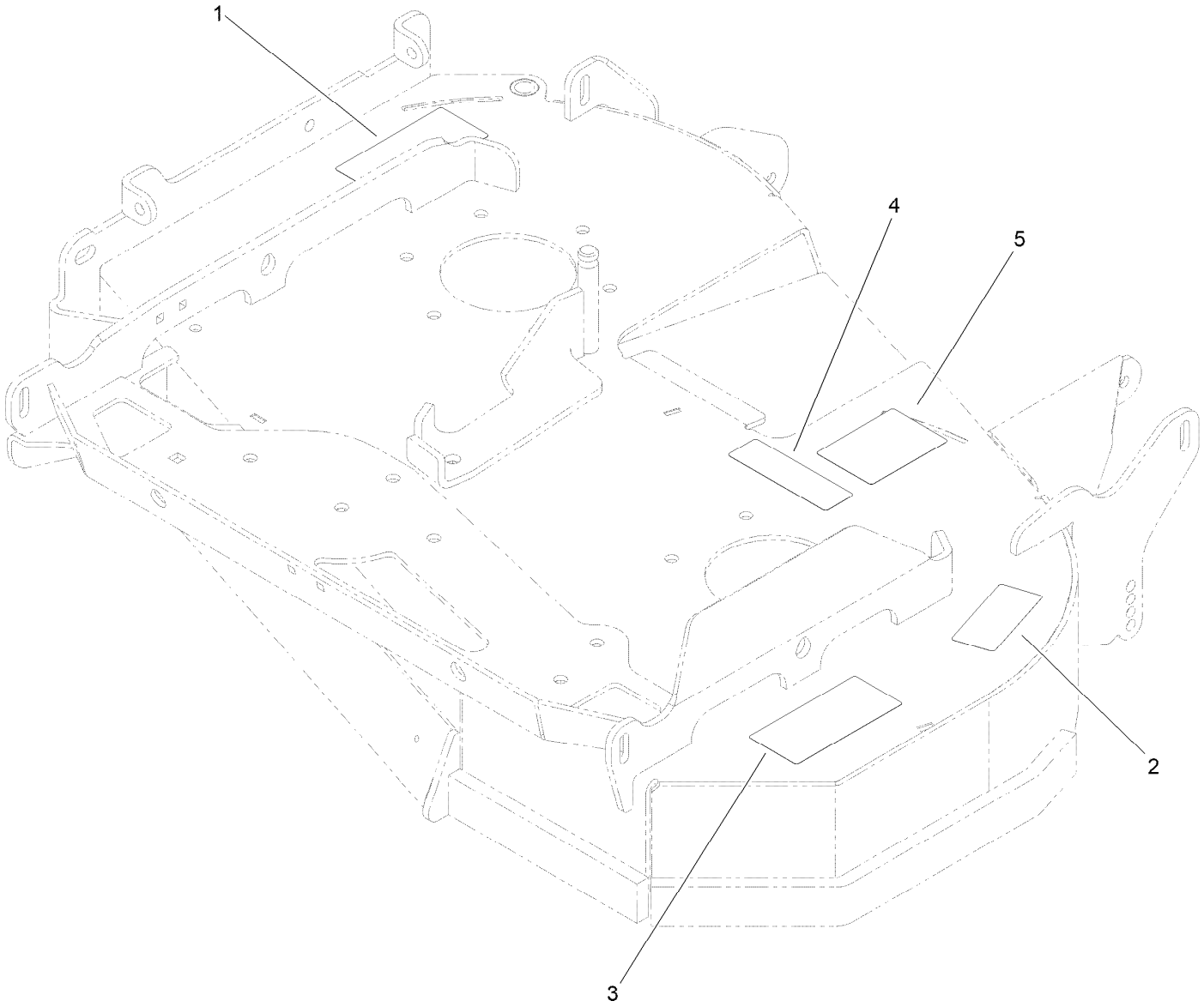

Deck Decal Assembly No. 161-6759 (continued)

Ref.	Part Number	Qty.	Description
1		1	ASM-Deck W/Decals ●
2	116-8283	1	Decal-Torque, Bolt
3	142-6830	2	Decal-Warning Thrown Object
4	112-9028	1	Decal-Cover, Missing
5	135-3004	1	Decal-Belt Routing

● Not serviced separately

Idler Arm Assembly No. 135-1679

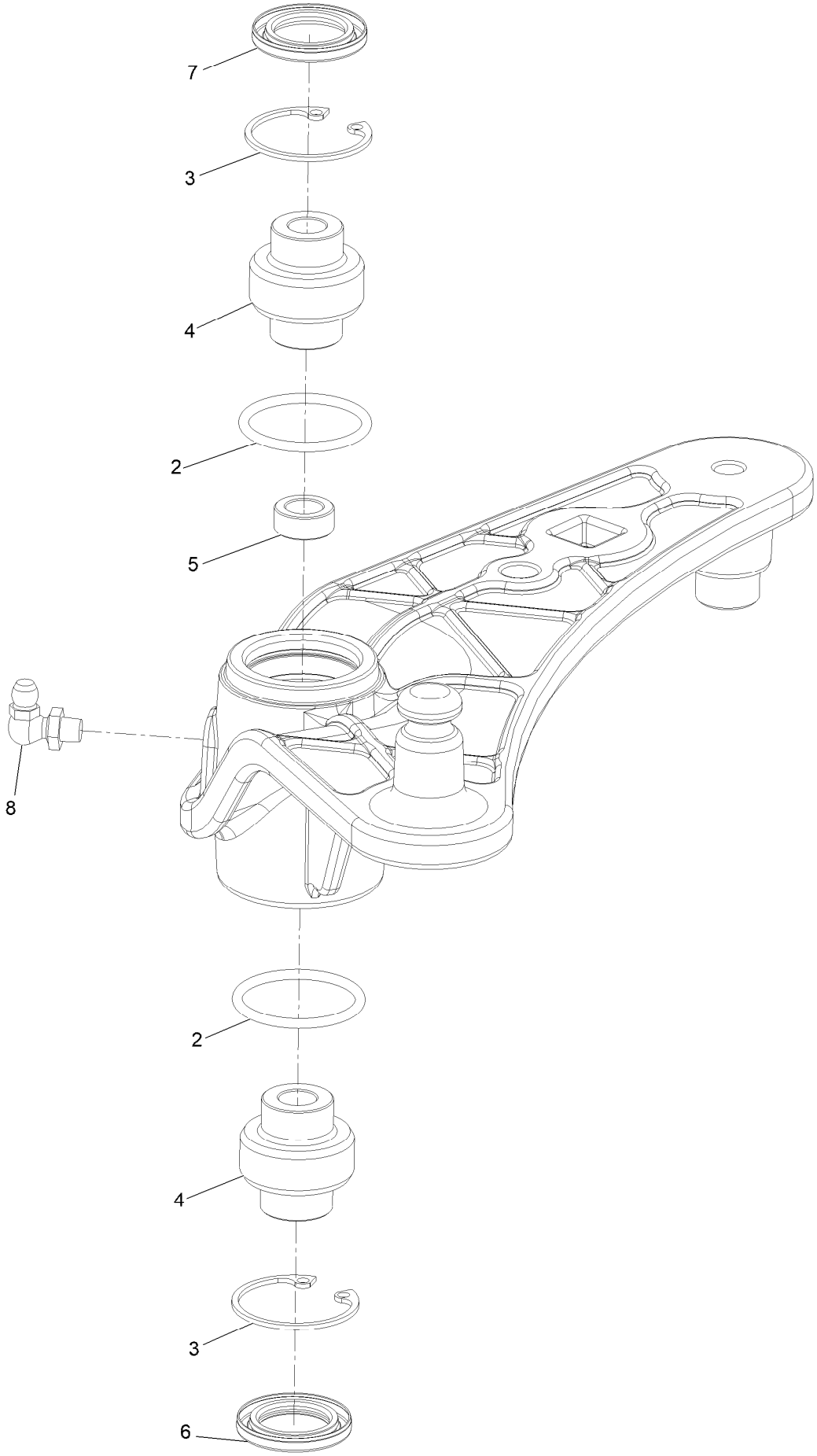

Idler Arm Assembly No. 135-1679 (continued)

Ref.	Part Number	Qty.	Description
2	106-7159	2	O-Ring
3	32120-10	2	Ring-Retaining
4	103-3504	2	Bearing-Spherical
5	103-5677	1	Spacer
6	103-3505	1	Seal-Lip, Double
7	103-3506	1	Seal-Single Lip
8	302-40	1	Zerk-90° 1/4-28

Rubber Deflector Assembly No. 135-2160

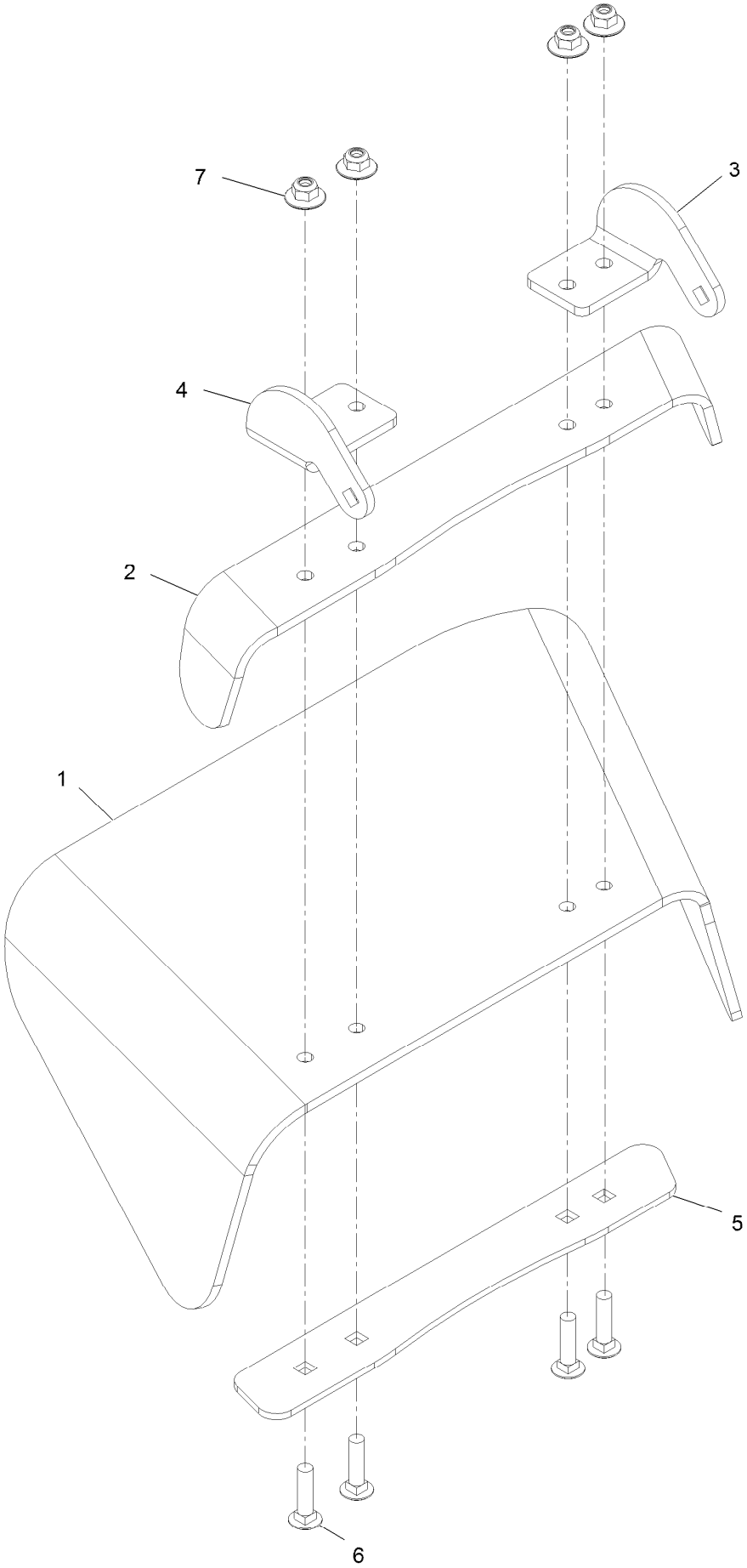

Rubber Deflector Assembly No. 135-2160 (continued)

Ref.	Part Number	Qty.	Description
1	135-2157	1	Deflector-Rubber
2	135-2155-01	1	Bracket-Top Deflector
3	135-2158-01	1	Bracket-Deflector
4	135-2159-01	1	Bracket-Deflector
5	135-2156-03	1	Strap-Bottom Deflector
6	3231-4	4	Bolt-Carriage 3/8-16 X 1 1/2
7	109-6658	4	Nut-Nyloc 3/8-16 Flg

Drive Wheel Assembly

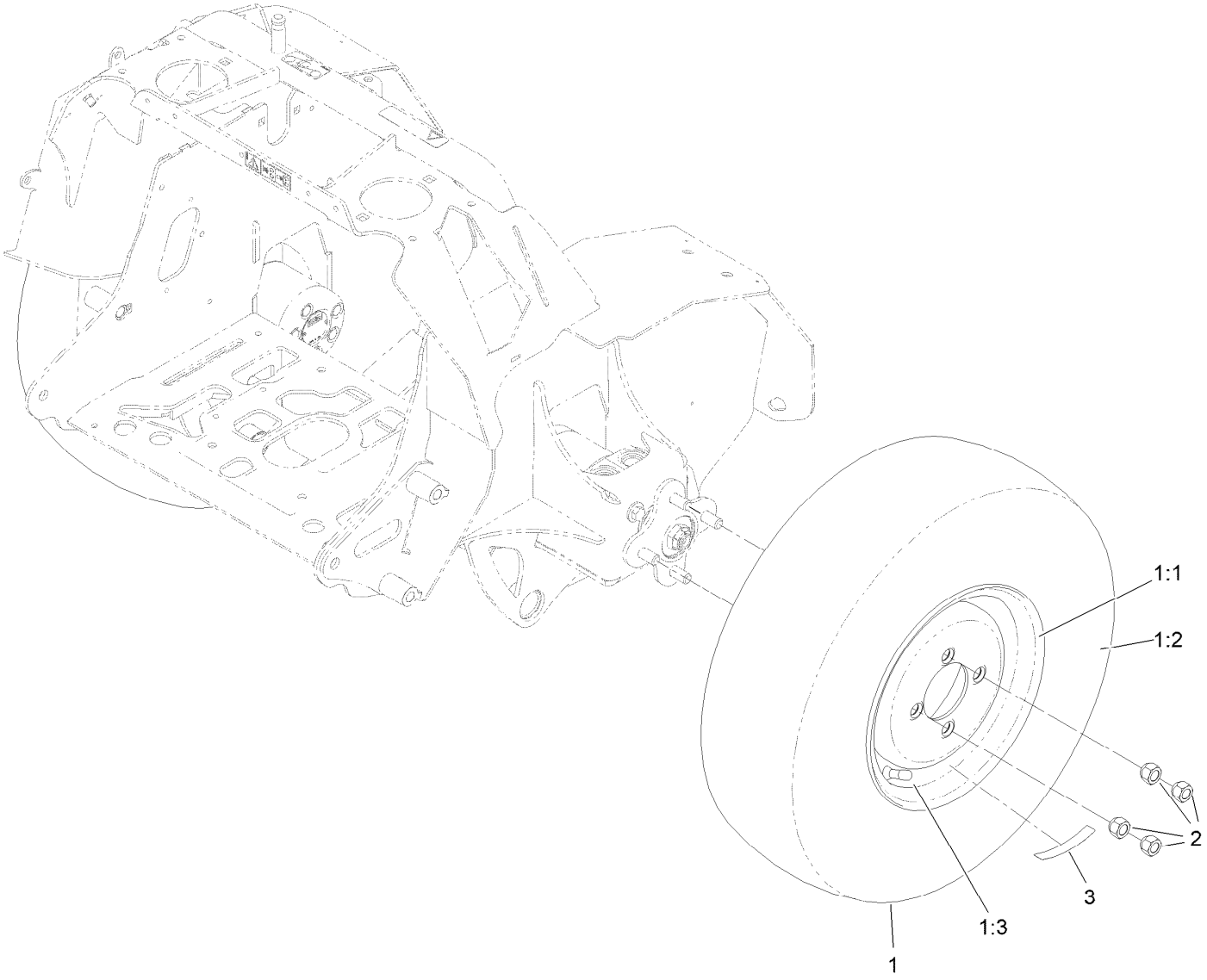

Drive Wheel Assembly (continued)

Ref.	Part Number	Qty.	Description
1	161-3508	2	Wheel And Tire ASM
1:1	161-3507	1	Wheel 10 X 6
1:2	135-1626	1	Tire-21X8.5-10
1:3	232-27	1	Stem-Valve
2	139-2564	8	Nut-Lug
3	126-2056	2	Decal-Torque Wheel Lug-Hub

Caster Wheel Assembly

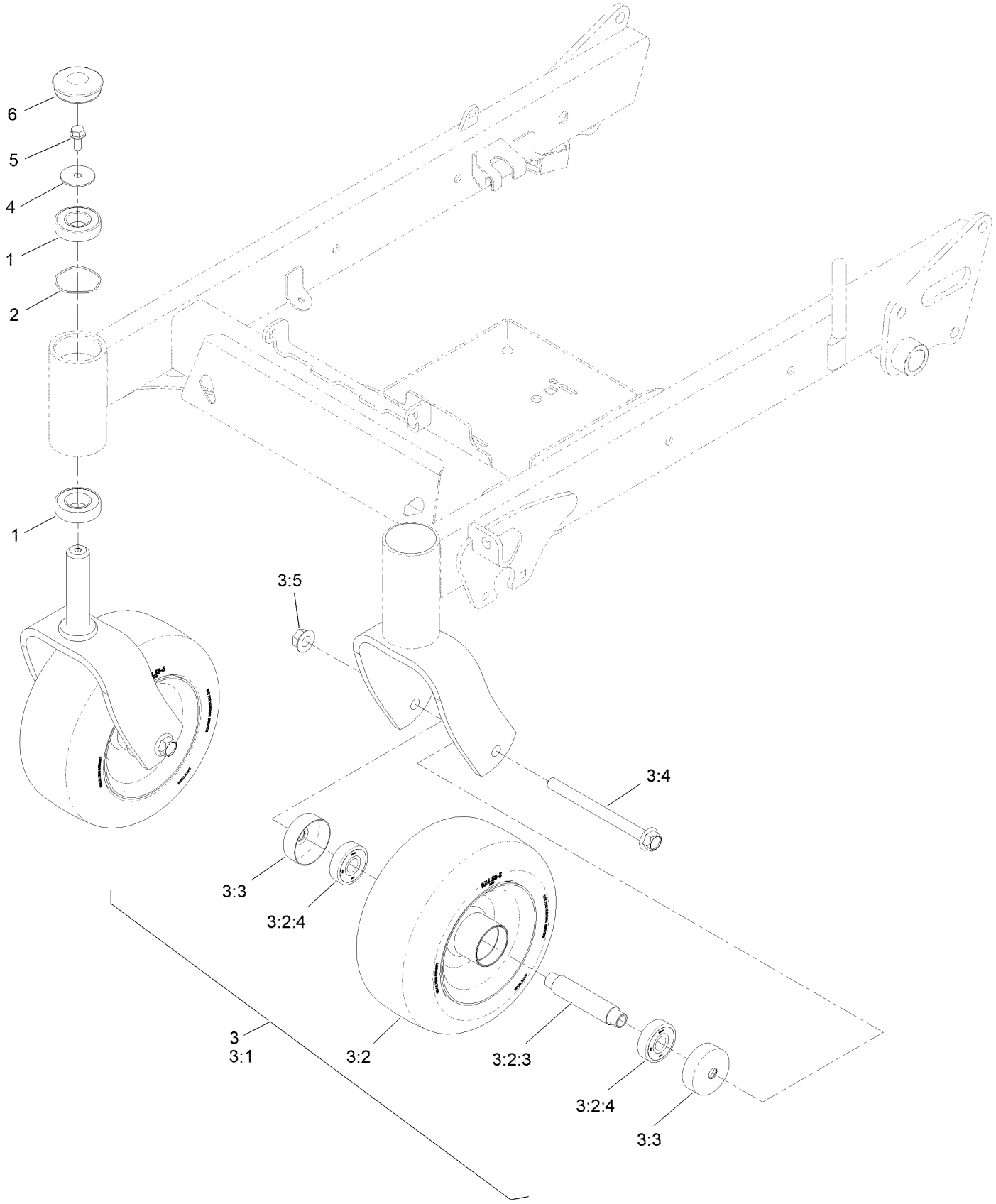

Caster Wheel Assembly (continued)

Ref.	Part Number	Qty.	Description
1	109-3678	4	Bearing-Ball
2	126-5897	2	Spring
3		2	ASM-Caster Fork W/Tire ●
3:1	135-1651-01	1	ASM-Caster Fork [red]
3:2	161-3505	1	ASM-Tire & Whl Sp 9X4.50-5
3:2:3	126-7904	1	Axle-Caster
3:2:4	116-4004	2	Bearing
3:3	135-3218	2	Guard, Seal
3:4	135-4633	1	Screw-HHF
3:5	32128-23	1	Nut-HF
4	3256-68	2	Washer-Flat
5	3234-5	2	Screw-HHF
6	144-0375	2	Cap, Grease

● Not serviced separately

Attachments and Accessories

For 74535 Grandstand 36in HDM

Product Name	Model/Part
Bucket Mount Kit	136-5681
Blade, Medium Flow 18.0 (.94 Hole)	146-3408
6 PACK - BLADE, 18.0 MED FLOW	146-3408P6
Blade, Low Flow 18.0 (.94 Hole)	146-3409
6 PACK - BLADE, 18.0 LOW FLOW	146-3409P6
Blade, Recycler 18.0 (.94 Hole)	146-3410
6 PACK - BLADE, 18.0 RECYCLER	146-3410P6
Blade-high Flow	146-3411
6 PACK - BLADE, 18.0 HIGH FLOW	146-3411P6
Blade-atomic, 18.00"	146-3413
6 PACK - BLADE, 18.0 ATOMIC	146-3413P6
Flasher Light Kit	161-6716
LED Work Light Kit	161-6717
36in Mulch Kit	161-6719
12V Power Adapter Kit	161-6720
Trash Container Kit	161-6721
3-Bushel Bagger	161-6831

Notes:



Count on it.