Form No. 3469-915 Rev A

TORO®

Count on it.

Operator's Manual

# TX 700 Compact Tool Carrier

**Model No. 22351—Serial No. 412900000 and Up**
**Model No. 22351G—Serial No. 400000000 and Up**
**Model No. 22352—Serial No. 412900000 and Up**

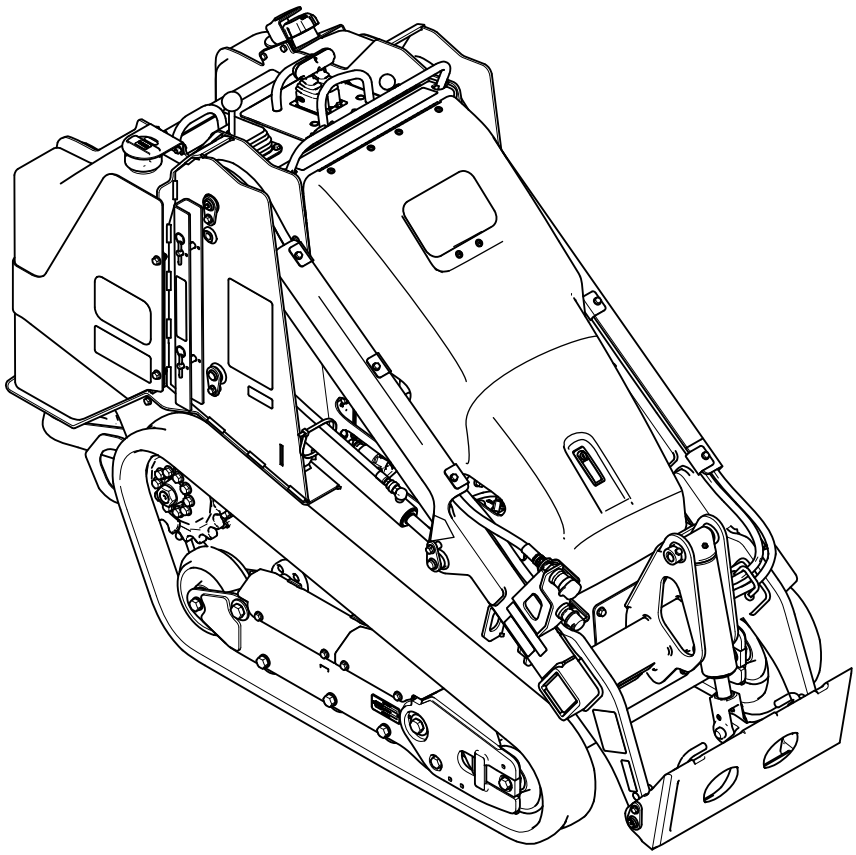

Register at www.Toro.com.
Original Instructions (EN)

CE UK CA

*3469-915*

This product complies with all relevant European directives; for details, please see the separate product specific Declaration of Conformity (DOC) sheet.

It is a violation of California Public Resource Code Section 4442 or 4443 to use or operate the engine on any forest-covered, brush-covered, or grass-covered land unless the engine is equipped with a spark arrester, as defined in Section 4442, maintained in effective working order or the engine is constructed, equipped, and maintained for the prevention of fire.

The enclosed engine owner's manual is supplied for information regarding the US Environmental Protection Agency (EPA) and the California Emission Control Regulation of emission systems, maintenance, and warranty. Replacements may be ordered through the engine manufacturer.

**⚠ WARNING**

**CALIFORNIA**
**Proposition 65 Warning**

**Diesel engine exhaust and some of its constituents are known to the State of California to cause cancer, birth defects, and other reproductive harm.**

**Battery posts, terminals, and related accessories contain lead and lead compounds, chemicals known to the State of California to cause cancer and reproductive harm. Wash hands after handling.**

**Use of this product may cause exposure to chemicals known to the State of California to cause cancer, birth defects, or other reproductive harm.**

Operate this machine in ambient temperatures from -18 to 38°C (0 to 100 °F). Contact your Authorized Service Dealer for provisions required for operating in extreme temperatures.

Read this information carefully to learn how to operate and maintain your product properly and to avoid injury and product damage. You are responsible for operating the product properly and safely.

Visit www.Toro.com for product safety and operation training materials, accessory information, help finding a dealer, or to register your product.

Whenever you need service, genuine Toro parts, or additional information, contact an Authorized Service Dealer or Toro Customer Service and have the model and serial numbers of your product ready. Figure 1 identifies the location of the model and serial numbers on the product. Write the numbers in the space provided.

***Important:*** **With your mobile device, you can scan the QR code on the serial number decal (if equipped) to access warranty, parts, and other product information.**

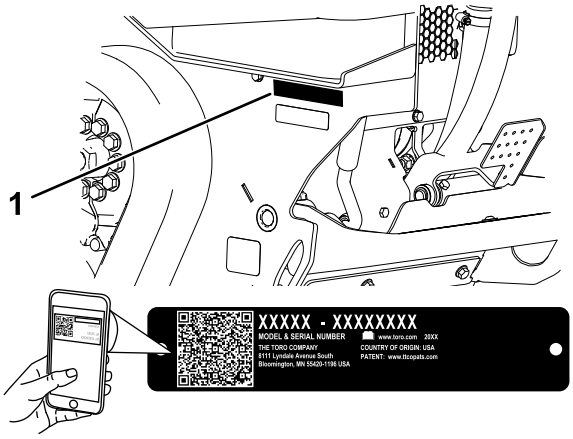


g367614

**Figure 1**

1. Model and serial number location

**Model No.** _____

**Serial No.** _____

# Introduction

This machine is a compact tool carrier intended for use in various earth and materials moving activities for landscaping and construction work. It is designed to operate a wide variety of attachments, each of which perform a specialized function. Using this product for purposes other than its intended use could prove dangerous to you and bystanders. Do not modify the machine or attachments.

This machine should be operated, serviced, and repaired only by professionals familiar with its characteristics and acquainted with the relevant safety procedures.

This manual identifies potential hazards and has safety messages identified by the safety-alert symbol (Figure 2), which signals a hazard that may cause serious injury or death if you do not follow the recommended precautions.

© 2024—The Toro® Company
8111 Lyndale Avenue South
Bloomington, MN 55420



Contact us at www.Toro.com.
Printed in the USA
All Rights Reserved



g000502

**Figure 2**
Safety-alert symbol

This manual uses 2 words to highlight information. **Important** calls attention to special mechanical information and **Note** emphasizes general information worthy of special attention.

# Contents


Safety ..... 4
General Safety ..... 4
Safety and Instructional Decals ..... 5
Product Overview ..... 11
Controls ..... 12
Message Display ..... 15
Specifications ..... 16
Attachments/Accessories ..... 16
Before Operation ..... 16
Before Operation Safety ..... 16
Adding Fuel ..... 17
Performing Daily Maintenance ..... 18
During Operation ..... 18
During Operation Safety ..... 18
Starting the Engine ..... 20
Driving the Machine ..... 20
Shutting Off the Engine ..... 20
Using Attachments ..... 20
After Operation ..... 22
After Operation Safety ..... 22
Retrieving a Stuck Machine ..... 23
Moving a Non-Functioning Machine ..... 23
Hauling the Machine ..... 24
Lifting the Machine ..... 26
Maintenance ..... 27
Maintenance Safety ..... 27
Recommended Maintenance Schedule(s) ..... 27
Pre-Maintenance Procedures ..... 29
Using the Cylinder Locks ..... 29
Accessing Internal Components ..... 29
Lubrication ..... 32
Greasing the Machine ..... 32
Engine Maintenance ..... 32
Engine Safety ..... 32
Servicing the Air-Cleaner ..... 32
Servicing the Engine Oil ..... 34
Fuel System Maintenance ..... 36
Draining the Water Separator ..... 36
Replacing the Water Separator Filter ..... 37
Replacing the In-Line Fuel Filter ..... 37
Checking the Fuel Lines and Connections ..... 37
Bleeding the Fuel System ..... 38
Draining the Fuel Tank(s) ..... 38
Electrical System Maintenance ..... 38
Electrical System Safety ..... 38
Using the Battery-Disconnect Switch ..... 38
Servicing the Battery ..... 39
Jump-Starting the Machine ..... 41
Servicing the Fuses ..... 42
Drive System Maintenance ..... 43
Servicing the Tracks ..... 43
Cooling System Maintenance ..... 46
Cooling System Safety ..... 46
Servicing the Cooling System ..... 46
Brake Maintenance ..... 48
Testing the Parking Brake ..... 48
Belt Maintenance ..... 48
Checking the Alternator-Belt Tension ..... 48
Controls System Maintenance ..... 49
Adjusting the Controls ..... 49
Hydraulic System Maintenance ..... 49
Hydraulic System Safety ..... 49
Relieving Hydraulic Pressure ..... 49
Hydraulic Fluid Specifications ..... 50
Checking the Hydraulic-Fluid Level ..... 50
Replacing the Hydraulic Filter ..... 51
Changing the Hydraulic Fluid ..... 51
Cleaning ..... 52
Removing Debris ..... 52
Washing the Machine ..... 52
Cleaning the Chassis ..... 52
Storage ..... 53
Storage Safety ..... 53
Storage ..... 53
Troubleshooting ..... 54

# Safety

## General Safety

**⚠ DANGER**

**There may be buried utility lines in the work area. Digging into them may cause a shock or an explosion.**

**Have the property or work area marked for buried lines and do not dig in marked areas. Contact your local marking service or utility company to have the property marked (for example, in the US, call 811 or in Australia, call 1100 for the nationwide marking service).**

Always follow all safety instructions to avoid serious injury or death.

- Do not exceed the rated operating capacity, as the machine may become unstable, which may result in loss of control.
- Do not carry a load with the arms raised; always carry loads close to the ground.
- Slopes are a major factor related to loss-of-control and tip-over accidents, which can result in severe injury or death. **Operating the machine on any slope or uneven terrain requires extra caution.**
- **Operate the machine up and down slopes with the heavy end of the machine uphill and the load close to the ground.** Weight distribution changes with attachments. An empty bucket makes the rear of the machine the heavy end, and a full bucket makes the front of the machine the heavy end. Most other attachments make the front of the machine the heavy end.
- Have the property or work area marked for buried lines and other objects, and do not dig in marked areas.
- Read and understand the content of this *Operator's Manual* before starting the engine.
- Use your full attention while operating the machine. Do not engage in any activity that causes distractions; otherwise, injury or property damage may occur.
- Never allow children or untrained people to operate the machine.
- Keep your hands and feet away from the moving components and attachments.
- Do not operate the machine without the guards and other safety protective devices in place and working on the machine.
- Keep bystanders and children out of the operating area.
- Stop the machine, shut off the engine, and remove the key before servicing, fueling, or unclogging the machine.

Improperly using or maintaining this machine can result in injury. To reduce the potential for injury, comply with these safety instructions and always pay attention to the safety-alert symbol



, which means Caution, Warning, or Danger—personal safety instruction. Failure to comply with these instructions may result in personal injury or death.

# Safety and Instructional Decals

Safety decals and instructions are easily visible to the operator and are located near any area of potential danger. Replace any decal that is damaged or missing.



decalbatterysymbols

**Battery Symbols**

Some or all of these symbols are on your battery.

1. Explosion hazard
2. No fire, open flame, or smoking
3. Caustic liquid/chemical burn hazard
4. Wear eye protection.
5. Read the *Operator's Manual*.
6. Keep bystanders away from the battery.
7. Wear eye protection; explosive gases can cause blindness and other injuries.
8. Battery acid can cause blindness or severe burns.
9. Flush eyes immediately with water and get medical help fast.
10. Contains lead; do not discard

---

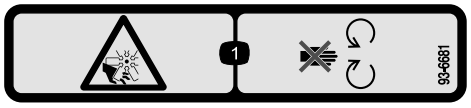

decal93-6681

**93-6681**

1. Cutting/dismemberment hazard, fan—stay away from moving parts.

---

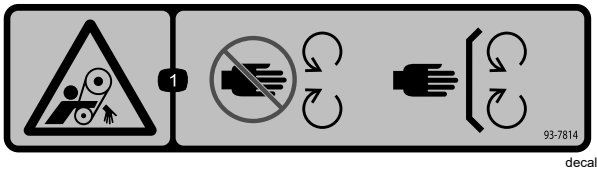

decal93-7814

**93-7814**

1. Entanglement hazard, belt—stay away from moving parts; keep all guards and shields in place.

---

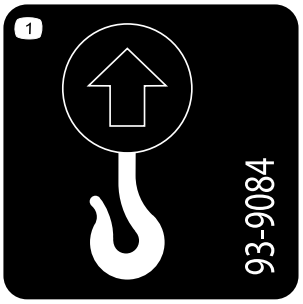

decal93-9084

**93-9084**

1. Lift point

---

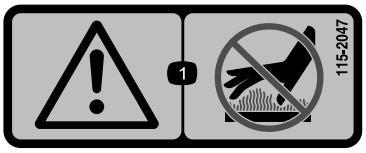

decal115-2047

**115-2047**

1. Warning—do not touch the hot surface.

---

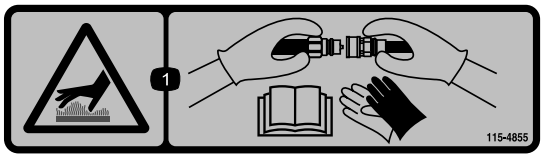

decal115-4855

**115-4855**

1. Hot surface/burn hazard—wear protective gloves when handling the hydraulic couplers and read the *Operator's Manual* for information on handling hydraulic components.

---



decal115-4858

**115-4858**

1. Crushing hazard of hands or feet—install the cylinder lock.

---



decal115-4865

**115-4865**

1. Engine coolant
2. Read the *Operator's Manual*.

---




decal117-3276

**117-3276**

1. Engine coolant under pressure
2. Explosion hazard—read the *Operator's Manual*.
3. Warning—do not touch the hot surface.
4. Warning—read the *Operator's Manual*.

---

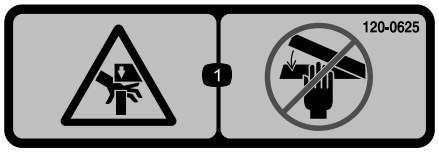


decal120-0625

**120-0625**

1. Pinch point, hand—keep hands away.

---

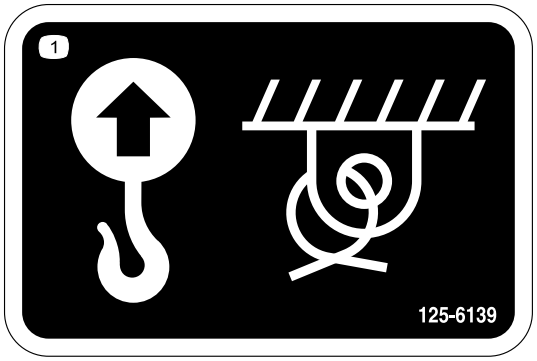


decal125-6139

**125-6139**

1. Lift point and tie-down point

---

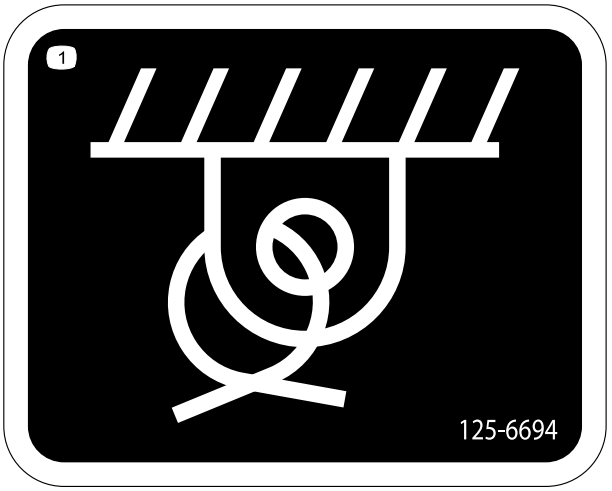


decal125-6694

**125–6694**

1. Tie down location

---

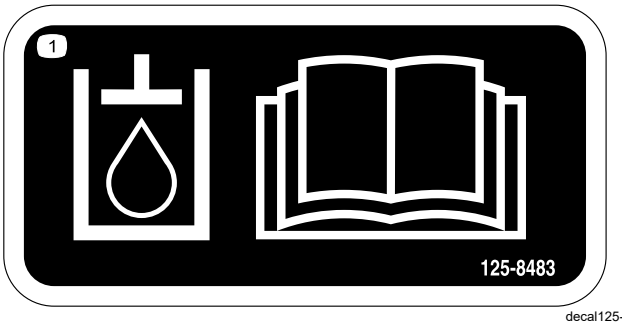


decal125-8483

**125-8483**

1. Hydraulic fluid; read the *Operator's Manual*.

---

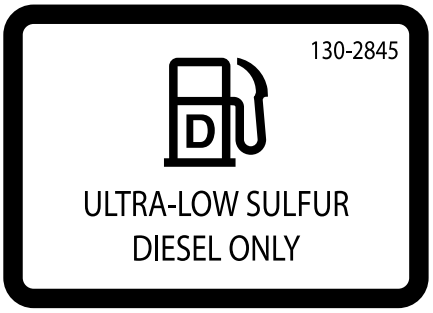


decal130-2845

**130–2845**

---

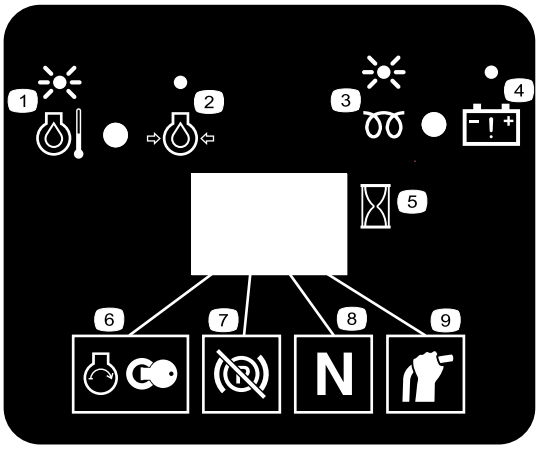


decal130-7637

**130-7637**

1. Blinking light—engine-coolant temperature
2. Steady light—engine-oil pressure
3. Blinking light—glow plug
4. Steady light—battery warning
5. Hourmeter
6. Engine start
7. Parking brake disengaged
8. Traction neutral
9. Auxiliary lever neutral

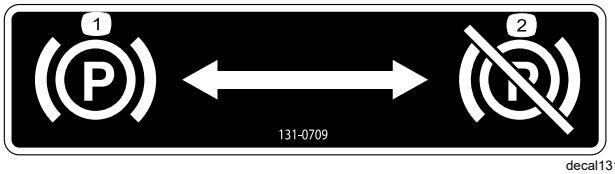


decal131-0709

**131-0709**

1. Parking brake—engage
2. Parking brake—disengage

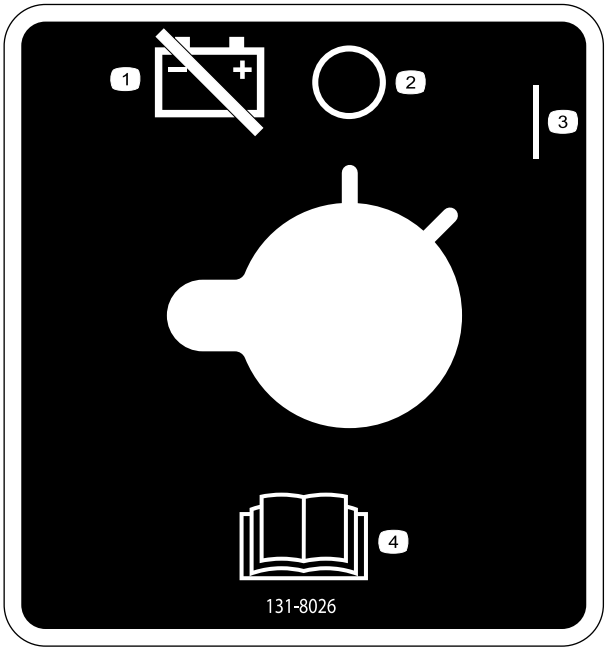


decal131-8026

**131-8026**

1. Battery power—disconnect
2. Off
3. On
4. Read the *Operator's Manual*.




decal133-8062

**133-8062**

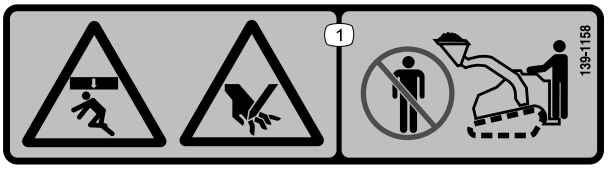


decal139-1158

**139-1158**

1. Crushing hazard, from above, and pinching hazard—stay away from the bucket and loading arms.

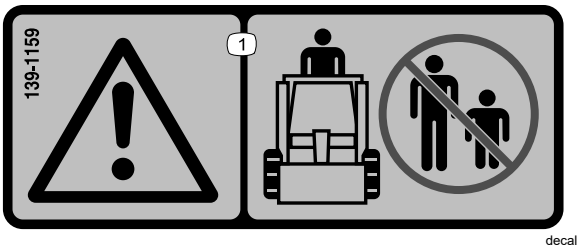


decal139-1159

**139-1159**

1. Warning—keep bystanders away.

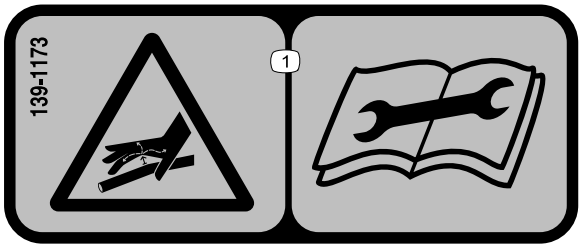


decal139-1173

**139-1173**

1. High-pressure fluid hazard, injection into the body—read the *Operator's Manual* before performing maintenance.

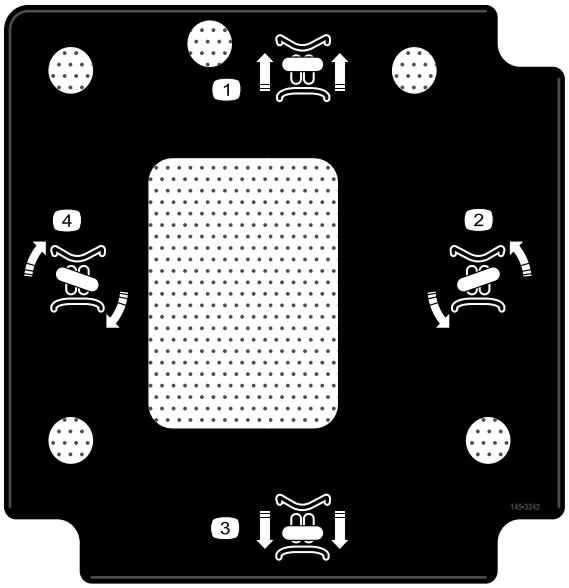


decal145-3242

**145-3242**

1. Move forward
2. Turn left
3. Move rearward
4. Turn right

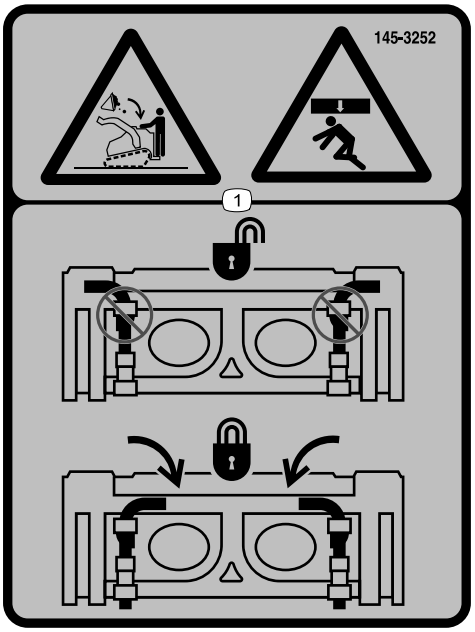


decal145-3252

**145-3252**

1. Crushing hazard from above, falling load—ensure that the quick-attach pins are locked.

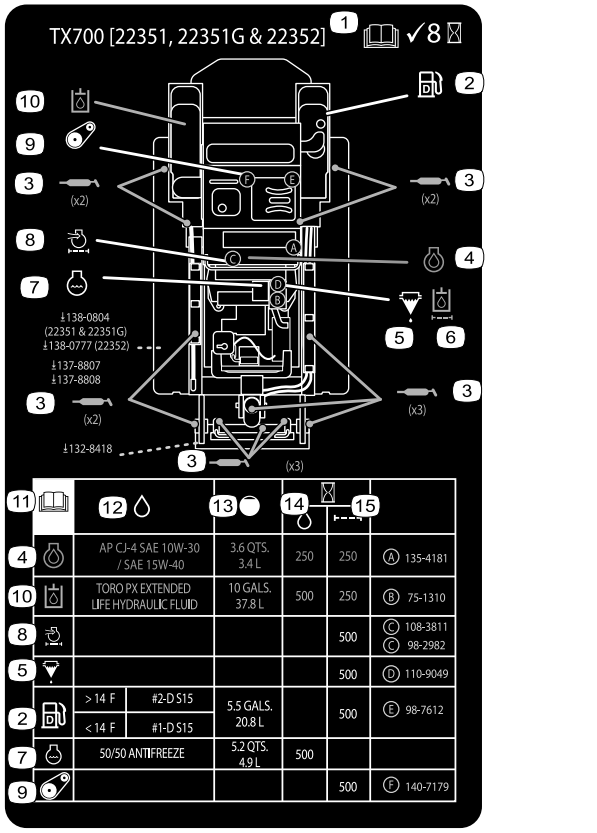


decal147-9016

**147-9016**

1. Read the *Operator's Manual*; Check every 8 hours
2. Diesel fuel
3. Grease points
4. Engine oil
5. Fuel/water separator
6. Hydraulic fluid filter
7. Engine coolant
8. Engine air filter
9. Belt tension
10. Hydraulic fluid
11. Read the *Operator's Manual*.
12. Fluid specification
13. Capacity
14. Fluid change interval (hours)
15. Filter change interval (hours)

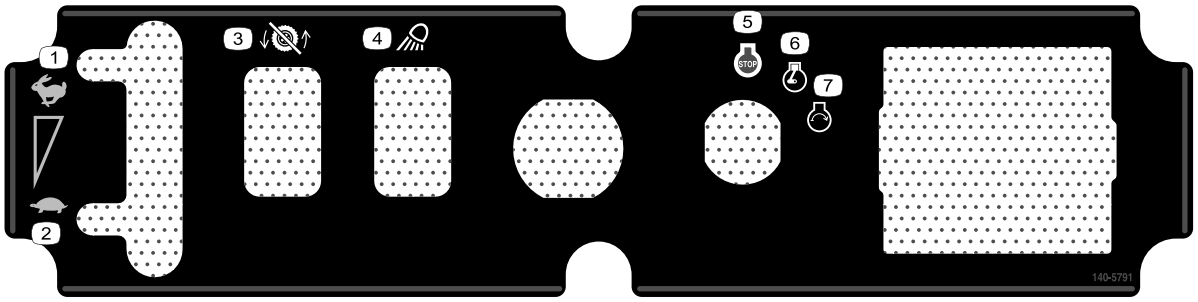


decal140-5791

**140-5791**

1. Fast
2. Slow
3. Traction disabled
4. Work light
5. Engine—start
6. Engine—run
7. Engine—shut off

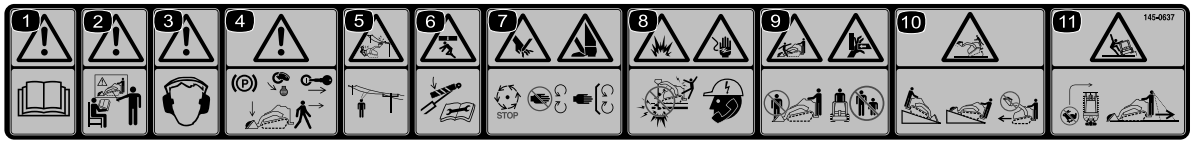


decal145-0637

**145-0637**

1. Warning—read the *Operator's Manual*.
2. Warning—receive training before operating the machine.
3. Warning—wear hearing protection.
4. Warning—engage the parking brake, lower the attachment to the ground, shut off the engine, and remove the key from the ignition before leaving the machine.
5. Electrocution hazard, power lines—check for power lines in the area before using the machine.
6. Crushing hazard—install the cylinder lock; read the *Operator's Manual* before servicing or performing maintenance.
7. Cutting/severing hazard of hand or foot—wait for all moving parts to stop before servicing; keep away from moving parts; keep all guards and shields in place.
8. Explosion hazard; electrocution hazard—call the local utilities hotline before beginning work in an area.
9. Crushing hazard—keep away from the attachment when operating the machine; keep bystanders away from the machine.
10. Tipping hazard—always move up or down slopes with the attachment lowered; never drive on a slope with the attachment raised; always operate with the heavy end uphill; always carry loads low; never jerk the control levers; use a steady, even motion.
11. Tipping hazard—do not make fast turns; always check behind you before reversing the machine.




decal145-0638

**145-0638**

1. Hydraulic attachment—forward; lock the hydraulic flow using the foot pedal.
2. Hydraulic attachment-—reverse; lock the hydraulic flow using the foot pedal.
3. Tilt the attachment forward.
4. Lower the attachment.
5. Tilt the attachment rearward.
6. Raise the attachment.

# Product Overview

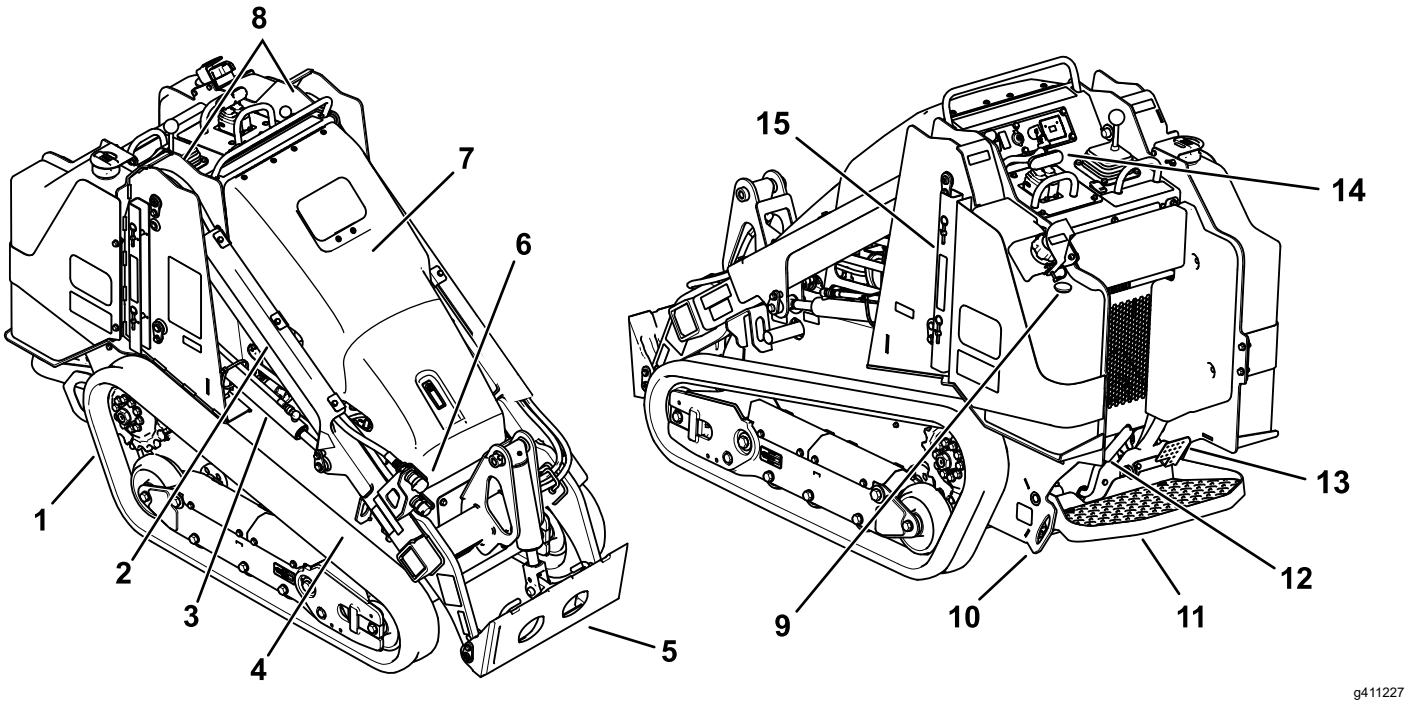


**Figure 3**

1. Track
2. Loader arm
3. Lift cylinder
4. Tie-down/lift loop
5. Mount plate
6. Auxiliary hydraulic couplers
7. Hood
8. Lift point
9. Fuel gauge
10. Tie-down loop
11. Operator platform
12. Parking brake
13. Auxiliary hydraulics lock pedal
14. Control panel
15. Cylinder lock

# Controls

Become familiar with all the controls before you start the engine and operate the traction unit.

## Control Panel

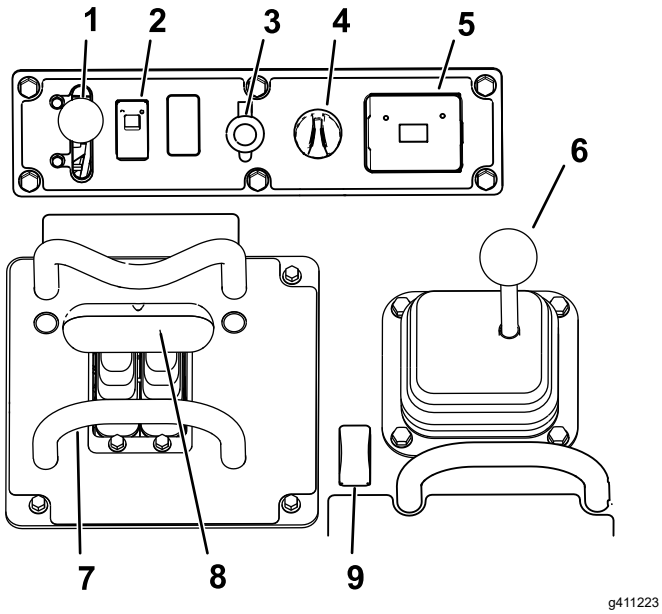


g411223

**Figure 4**

1. Throttle lever
2. Traction-enable switch
3. Power socket
4. Key switch
5. Hour meter
6. Loader-arm/attachment-tilt lever
7. Reference bar
8. Traction control
9. Auxiliary hydraulics switch
10. Loader valve lock

## Key Switch

The key switch, used to start and shut off the engine, has 3 positions: OFF, RUN, and START.

## Throttle Lever

Move the control forward to increase the engine speed and rearward to decrease speed.

## Reference Bar

When driving the traction unit, use the reference bar as a handle and a leverage point for controlling the traction control and the auxiliary-hydraulics lever. To ensure smooth, controlled operation, do not take your hands off the reference bars while operating the machine.

## Traction-Enable Switch

The traction control is automatically disabled when starting the machine. Toggle the traction-enable switch after starting the machine to use the traction control.

## Traction Control

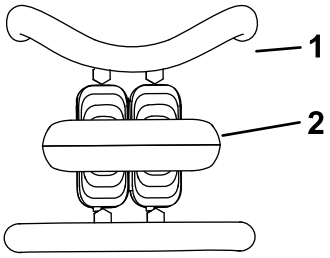


g259646

**Figure 5**

1. Reference bar
2. Traction control

- To move forward, move the traction control forward.

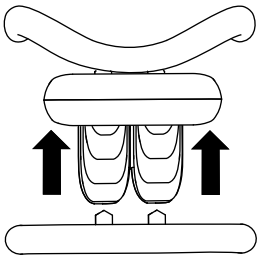

g259645

**Figure 6**

- To move rearward, move the traction control rearward.

  ***Important:*** **When reversing, look behind you for obstructions and keep your hands on the reference bar.**

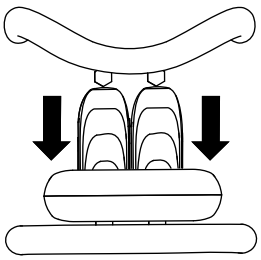

g259647

**Figure 7**

- To turn right, rotate the traction control clockwise.

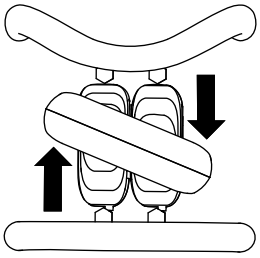

g259649

**Figure 8**

- To turn left, rotate the traction control counterclockwise.

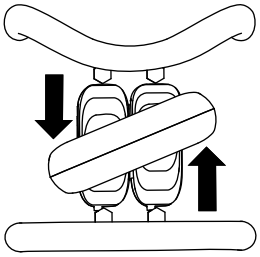

g259648

**Figure 9**

- To stop the machine, release the traction control.

**Note:** The farther you move the traction control in any direction, the faster the machine moves in that direction.

# Loader Arm/Attachment-Tilt Lever

Slowly move the lever to operate the loader arms and tilt the attachment.

**Note:** The detent (float) position allows attachments such as the leveler and the hydraulic blade to follow the contours of the ground (i.e., float) when grading.

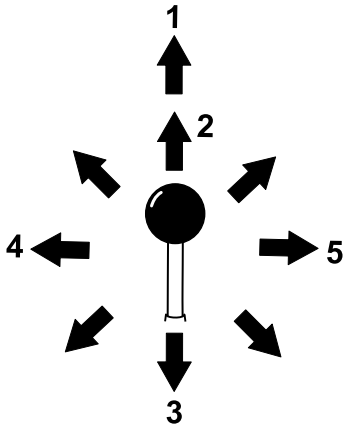


g356466

**Figure 10**

1. Detent (float) position—push the lever fully forward.
2. Lower the loader arms.
3. Raise the loader arms.
4. Tilt the attachment rearward.
5. Tilt the attachment forward.

By moving the lever to an intermediate position (e.g., forward and left), you can move the loader arms and tilt the attachment at the same time.

# Loader-Control-Reference Bar

The loader-control-reference bar helps stabilize your hand while operating the loader arm/attachment-tilt lever (Figure 4).

## Auxiliary-Hydraulics Controls

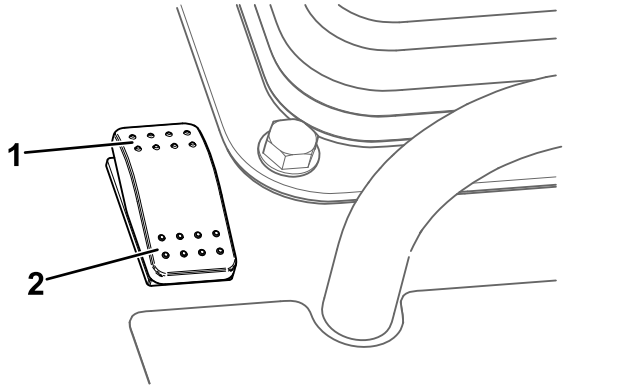


g411222

**Figure 11**

1. Operate auxiliary hydraulics in the forward direction.
2. Operate auxiliary hydraulics in the reverse direction.

## Auxiliary-Hydraulics Lock Pedal

Use your right foot to press the auxiliary-hydraulics lock pedal to continue the forward or reverse flow of the auxiliary hydraulics and free your hand for other controls.

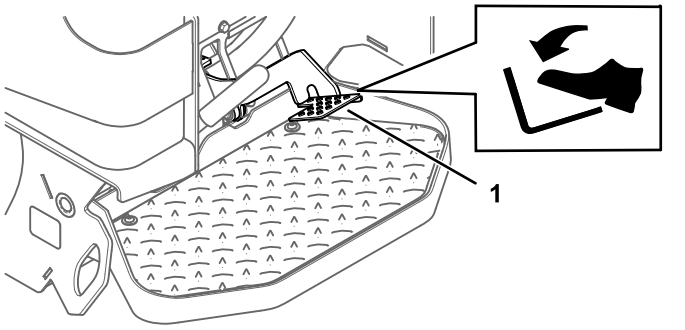


g357086

**Figure 12**

1. Auxiliary-hydraulics lock pedal

## Parking-Brake Lever

- To engage the parking brake, rotate the lever to left.

  **Note:** The traction unit may roll slightly before the brakes engage in the drive sprocket.

- To release the brake, rotate the brake lever to the right.

  **Note:** You may need to adjust the traction control to release the brake pins and rotate the lever.

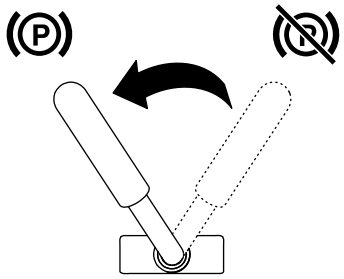


G030721

g030721

**Figure 13**

## Fuel Gauge

This gauge measures the amount of fuel in the fuel tank(s).

# Message Display

### Engine-Coolant-Temperature Light

If the engine coolant becomes too hot, the light on the left of the display flashes and the horn sounds. If this happens, disengage the auxiliary hydraulics and let the machine run at high idle to allow the cooling system to cool the machine. Check the coolant level when the engine has fully cooled.

***Important:*** **Do not shut off the engine, as this may cause the machine to overheat.**



g029201

g029201

**Figure 14**

### Engine-Oil-Pressure Light

If the engine-oil-pressure becomes too low, the light on the left of the display illuminates steadily. If this happens, shut off the engine immediately and check the oil level. If it is low, add oil and look for possible leaks.

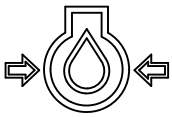

g029665

g029665

**Figure 15**

### Glow-Plug Light

The light on the right flashes while the glow plugs are charged and warming the engine.



g029199

g029199

**Figure 16**

### Battery-Charge Light

If the battery charge becomes too low, the light on the right illuminates steadily. If this happens, shut off the engine and charge or replace the battery. Refer to Servicing the Battery (page 39).

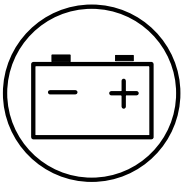

g029207

g029207

**Figure 17**

### Hour Meter

The hour meter displays the number of hours of operation that have been logged on the traction unit and the following indicators:

- Engine start—displays when you start the engine



g029974

g029974

**Figure 18**

- Parking brake—displays when you disengage the parking brake




g029251

g029251

**Figure 19**

- Traction neutral—displays when the traction control is in the NEUTRAL position




g029211

g029211

**Figure 20**

- Auxiliary lever neutral—displays when the auxiliary lever is in the NEUTRAL position



g029975

g029975

**Figure 21**

# Specifications

**Note:** Specifications and design are subject to change without notice.

| Model 22351 and 22351G | |
|---|---|
| Width | 86.9 cm (34.2 inches) |
| Length | 202.7 cm (79.8 inches) |
| Height | 140.5 cm (55.3 inches) |
| Weight | 1250 kg (2756 lb) |
| Operating capacity (with 75 kg (165 lb) operator and standard bucket) | 318 kg (700 lb) |
| Tipping capacity (with 75 kg (165 lb) operator and standard bucket) | 907 kg (2000 lb) |
| Wheelbase | 99.1 cm (39.0 inches) |
| Dump height (with standard bucket) | 133.4 cm (52.5 inches) |
| Reach—fully raised (with standard bucket) | 78.2 cm (30.8 inches) |
| Height to hinge pin (with standard bucket in highest position) | 187.2 cm (73.7 inches) |

| Model 22352 | |
|---|---|
| Width | 102.1 cm (40.2 inches) |
| Length | 202.7 cm (79.8 inches) |
| Height | 140.5 cm (55.3 inches) |
| Weight | 1298 kg (2862 lb) |
| Operating capacity (with 75 kg (165 lb) operator and standard bucket) | 318 kg (700 lb) |
| Tipping capacity (with 75 kg (165 lb) operator and standard bucket) | 918 kg (2023 lb) |
| Wheelbase | 99.1 cm (39.0 inches) |
| Dump height (with standard bucket) | 133.4 cm (52.5 inches) |
| Reach—fully raised (with standard bucket) | 78.2 cm (30.8 inches)) |
| Height to hinge pin (with standard bucket in highest position) | 187.2 cm (73.7 inches) |

## Attachments/Accessories

A selection of Toro approved attachments and accessories is available for use with the machine to enhance and expand its capabilities. Contact your Authorized Service Dealer or authorized Toro distributor or go to www.Toro.com for a list of all approved attachments and accessories.

To ensure optimum performance and continued safety certification of the machine, use only genuine Toro replacement parts and accessories. Replacement parts and accessories made by other manufacturers could be dangerous, and such use could void the product warranty.

# Operation

**Note:** Determine the left and right sides of the machine from the normal operating position.

# *Before Operation*

## Before Operation Safety

### General Safety

- Never allow children or untrained people to operate or service the machine. Local regulations may restrict the age or require certified training of the operator. The owner is responsible for training all operators and mechanics.
- Become familiar with the safe operation of the equipment, operator controls, and safety decals.
- Always engage the parking brake (if equipped), shut off the engine, remove the key, wait for all moving parts to stop, and allow the machine to cool before adjusting, servicing, cleaning, or storing the machine.
- Know how to stop the machine and shut off the engine quickly.
- Check that the operator's presence controls, safety switches, and shields are attached and functioning properly. Do not operate the machine unless they are functioning properly.
- Locate the pinch-point areas marked on the machine and attachments; keep your hands and feet away from these areas.
- Before operating the machine with an attachment, ensure that the attachment is properly installed and that it is a genuine Toro attachment. Read all the attachment manuals.
- Evaluate the terrain to determine what accessories and attachments you need to properly and safely perform the job.
- Have the property or work area marked for buried lines and other objects, and do not dig in marked areas; note the location of unmarked objects and structures, such as underground storage tanks, wells, and septic systems.
- Inspect the area where you will use the equipment for uneven surfaces or hidden hazards.
- Ensure that the area is clear of bystanders before operating the machine. Stop the machine if anyone enters the area.

## Fuel Safety

- Use extreme care when handling fuel. It is flammable and its vapors are explosive.
- Extinguish all cigarettes, cigars, pipes, and other sources of ignition.
- Use only an approved fuel container.
- Do not remove the fuel cap or fill the fuel tank while the engine is running or hot.
- Do not add or drain fuel in an enclosed space.
- Do not store the machine or fuel container where there is an open flame, spark, or pilot light, such as on a water heater or other appliance.
- If you spill fuel, do not attempt to start the engine; avoid creating any source of ignition until the fuel vapors have dissipated.
- To prevent a static charge from igniting the fuel, remove the machine from the truck or trailer and refuel it on the ground, away from all vehicles. If this is not possible, place a portable fuel container on the ground, away from all vehicles, and fill it; then refuel the machine from the fuel container rather than from a fuel-dispenser nozzle.
- Keep the fuel-dispenser nozzle in contact with the rim of the fuel tank or container opening at all times until fueling is complete. Do not use a nozzle lock-open device.

# Adding Fuel

## Recommended Fuel

Use only clean, fresh diesel fuel or biodiesel fuels with low (<500 ppm) or ultra low (<15 ppm) sulfur content. The minimum cetane rating should be 40. Purchase fuel in quantities that you can use within 180 days to ensure fuel freshness.

Use summer-grade diesel fuel (No. 2-D) at temperatures above -7°C (20°F) and winter grade (No. 1-D or No. 1-D/2-D blend) below that temperature. Using winter-grade fuel at lower temperatures provides lower flash point and cold flow characteristics, which eases starting and reduces fuel filter plugging.

Using summer-grade fuel above -7°C (20°F) contributes toward longer fuel pump life and increased power compared to winter-grade fuel.

***Important:*** **Do not use kerosene or gasoline instead of diesel fuel. Failure to observe this caution will damage the engine.**

## Biodiesel Ready

This machine can also use a biodiesel blended fuel of up to B20 (20% biodiesel, 80% petrodiesel). The petrodiesel portion should be low or ultra low sulfur. Observe the following precautions:

- The biodiesel portion of the fuel must meet specification ASTM D6751 or EN14214.
- The blended fuel composition should meet ASTM D975 or EN590.
- Painted surfaces may be damaged by biodiesel blends.
- Use B5 (biodiesel content of 5%) or lesser blends in cold weather.
- Monitor seals, hoses, gaskets in contact with fuel as they may degrade over time.
- Fuel filter plugging may occur for a time after converting to biodiesel blends.
- Contact your distributor for more information on biodiesel.

## Filling the Fuel Tank

**Fuel tank capacity:** 20.8 L (5.5 US gallons)

1. Park the machine on a level surface, engage the parking brake, and lower the loader arms.
2. Shut off the engine and remove the key.
3. Remove the snapper pin and raise the bracket.

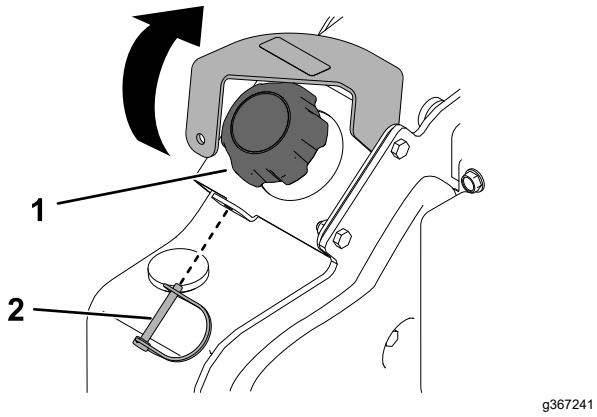


**Figure 22**

1. Fuel cap
2. Snapper pin

4. Remove the fuel cap.
5. Fill the tank with fuel up to the filler neck.
6. Install the cap.
7. Lower the bracket and secure it with the snapper pin.

# Performing Daily Maintenance

Before starting the machine each day, perform the Each Use/Daily procedures listed in Maintenance (page 27).

***Important:*** **Check the hydraulic-fluid level and bleed the fuel system before starting the engine for the first time; refer to Checking the Hydraulic-Fluid Level (page 50) and Bleeding the Fuel System (page 38).**

# *During Operation*

# During Operation Safety

## General Safety

- Do not exceed the rated operating capacity, as the machine may become unstable, which may result in loss of control.
- Do not carry a load with the arms raised. Always carry loads close to the ground.
- Use only Toro-approved attachments and accessories. Attachments can change the stability and the operating characteristics of the machine.
- For machines with a platform:
  - Lower the loader arms before stepping off the platform.
  - Do not try to stabilize the machine by putting your foot on the ground. If you lose control of the machine, step off the platform and away from the machine.
  - Do not place your feet under the platform.
  - Do not move the machine unless you are standing with both feet on the platform and your hands are holding onto the reference bars.
- Use your full attention while operating the machine. Do not engage in any activity that causes distractions; otherwise, injury or property damage may occur.
- Look behind and down before backing up to ensure that the path is clear.
- Never jerk the controls; use a steady motion.
- The owner/user can prevent and is responsible for accidents that may cause personal injury or property damage.
- Wear appropriate clothing including gloves, eye protection, long pants, substantial slip-resistant footwear, and hearing protection. Tie back long hair and do not wear loose clothing or loose jewelry.
- Do not operate the machine when you are tired, ill, or under the influence of alcohol or drugs.
- Never carry passengers and keep pets and bystanders away from the machine.
- Operate the machine only in good light, keeping away from holes and hidden hazards.
- Ensure that all the drives are in neutral and engage the parking brake (if equipped) before starting the engine. Start the engine only from the operator's position.
- Use care when approaching blind corners, shrubs, trees, or other objects that may obscure vision.

- Slow down and use caution when making turns and crossing roads and sidewalks. Watch for traffic.
- Stop the attachment when you are not working.
- Stop the machine, shut off the engine, remove the key, and inspect the machine if you strike an object. Make any necessary repairs before resuming operation.
- Never run an engine in an enclosed area.
- Never leave a running machine unattended.
- Before leaving the operating position, do the following:
  - Park the machine on a level surface.
  - Lower the loader arms and disengage the auxiliary hydraulics.
  - Engage the parking brake (if equipped).
  - Shut off the engine and remove the key.
- Do not operate the machine when there is the risk of lightning.
- Operate the machine only in areas where there is sufficient clearance for you to safely maneuver. Be aware of obstacles in close proximity to you. Failure to maintain adequate distance from trees, walls, and other barriers may result in injury as the machine backs up during operation if you are not attentive to the surroundings.
- Check for overhead clearance (i.e., electrical wires, branches, and doorways) before driving under any objects and do not contact them.
- Do not overfill the attachment and always keep the load level when raising the loader arms. Items in the attachment could fall and cause injury.

## Slope Safety

- **Operate the machine up and down slopes with the heavy end of the machine uphill.** Weight distribution changes with attachments. An empty bucket makes the rear of the machine the heavy end, and a full bucket makes the front of the machine the heavy end. Most other attachments make the front of machine the heavy end.
- Raising the loader arms on a slope affects the stability of the machine. Keep the loader arms in the lowered position when on slopes.
- Slopes are a major factor related to loss of control and tip-over accidents, which can result in severe injury or death. Operating the machine on any slope or uneven terrain requires extra caution.
- Establish your own procedures and rules for operating on slopes. These procedures must include surveying the site to determine which slopes are safe for machine operation. Always use common sense and good judgment when performing this survey.
- Slow down and use extra care on hillsides. Ground conditions can affect the stability of the machine.
- Avoid starting or stopping on a slope. If the machine loses traction, proceed slowly, straight down the slope.
- Avoid turning on slopes. If you must turn, turn slowly and keep the heavy end of the machine uphill.
- Keep all movements on slopes slow and gradual. Do not make sudden changes in speed or direction.
- If you feel uneasy operating the machine on a slope, do not do it.
- Watch for holes, ruts, or bumps, as uneven terrain could overturn the machine. Tall grass can hide obstacles.
- Use caution when operating on wet surfaces. Reduced traction could cause sliding.
- Evaluate the area to ensure that the ground is stable enough to support the machine.
- Use caution when operating the machine near the following:
  - Drop-offs
  - Ditches
  - Embankments
  - Bodies of water

  The machine could suddenly roll over if a track goes over the edge or the edge caves in. Maintain a safe distance between the machine and any hazard.
- Do not remove or add attachments on a slope.
- Do not park the machine on a hillside or slope.

## Utility Line Safety

- If you strike a utility line, do the following:
  - Shut off the machine and remove the key.
  - Remove all individuals from the work area.
  - Immediately contact the proper emergency and utility authorities to secure the area.
  - If you damage a fiber-optic cable, do not look into the exposed light.
- Do not leave the operator's platform if the machine is charged with electricity. You will be safe as long as you do not leave the platform.
  - Touching any part of the machine may ground you.
  - Do not allow another individual to touch or approach the machine when charged.

– Always assume the machine is charged if you strike an electrical or communication line. Do not attempt to leave the machine.

- Leaking gas is both flammable and explosive and may cause serious injury or death. Do not smoke while operating the machine.

# Starting the Engine

1. Ensure that the battery-disconnect switch is in the ON position.
2. Ensure that the traction-control is in the NEUTRAL position.
3. Move the throttle lever to the SLOW position.
4. Insert the key into the key switch and turn it to the ON position.
5. Wait for the glow-plug indicator light to stop blinking.
6. Turn the key to the START position. When the engine starts, release the key.

   ***Important:*** **Do not engage the starter for more than 10 seconds at a time. If the engine fails to start, wait 30 seconds for the starter to cool down between attempts. Failure to follow these instructions could burn out the starter motor.**
7. Move the throttle lever to the FAST position.
8. Enable the traction control by toggling the traction-enable switch before driving the machine.

## Starting in Cold Weather

If the outdoor temperature is below freezing, store the traction unit in a garage to keep it warmer and to aid in starting.

When starting the engine in cold conditions (i.e., when the air temperature is at or below freezing), allow it to run in the SLOW throttle position for 8 minutes before moving the throttle to the FAST position or engaging the auxiliary hydraulics.

***Important:*** **Running the engine at high speeds when the hydraulic system is cold could damage the hydraulic system.**

# Driving the Machine

**Note:** Enable the traction control by toggling the traction-enable switch before driving the machine.

Use the traction control to move the machine. The farther you move the traction control in any direction, the faster the machine moves in that direction. Release the traction control to stop the machine.

The throttle control regulates the engine speed as measured in rpm (revolutions per minute). Place the throttle lever in the FAST position for best performance. You can, however, use the throttle position to operate at slower speeds.

# Shutting Off the Engine

1. Park the machine on a level surface, engage the parking brake (if equipped), and lower the loader arms.
2. Ensure that the auxiliary hydraulics lever is in the NEUTRAL position.
3. Move the throttle lever to the SLOW position.
4. If the engine has been working hard or is hot, let it idle for a minute before turning the key switch to the OFF position.

   **Note:** This helps to cool the engine before you shut it off. In an emergency, you can shut off the engine immediately.
5. Turn the key switch to the OFF position and remove the key.

**⚠ CAUTION**

**A child or untrained bystander could attempt to operate the traction unit and be injured.**

**Remove the key from the key switch when leaving the traction unit, even if just for a few seconds.**

# Using Attachments

## Installing an Attachment

***Important:*** **Use only Toro-approved attachments. Attachments can change the stability and the operating characteristics of the machine. The warranty of the machine may be voided if you use the machine with unapproved attachments.**

***Important:*** **Before installing the attachment, ensure that the mount plates are free of any dirt or debris and that the pins rotate freely. If the pins do not rotate freely, grease them.**

1. Position the attachment on a level surface with enough space behind it to accommodate the machine.
2. Start the engine.
3. Tilt the attachment mount plate forward.
4. Position the mount plate into the upper lip of the attachment receiver plate.

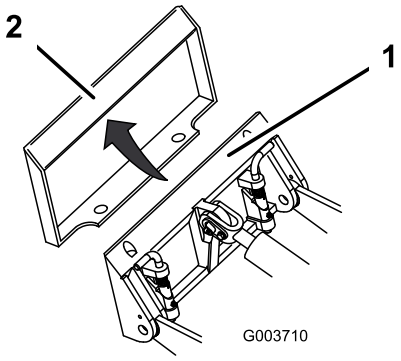


g003710

**Figure 23**

1. Mount plate
2. Receiver plate

5. Raise the loader arms while tilting back the mount plate at the same time.

   ***Important:*** **Raise the attachment enough to clear the ground and tilt the mount plate all the way back.**

6. Shut off the engine and remove the key.
7. Engage the quick-attach pins, ensuring that they are fully seated in the mount plate.

   ***Important:*** **If the pins do not rotate to the engaged position, the mount plate is not fully aligned with the holes in the attachment receiver plate. Check the receiver plate and clean it if necessary.**

**⚠ WARNING**

**If you do not fully seat the quick-attach pins through the attachment mount plate, the attachment could fall off the machine, crushing you or bystanders.**

**Ensure that the quick-attach pins are fully seated in the attachment mount plate.**

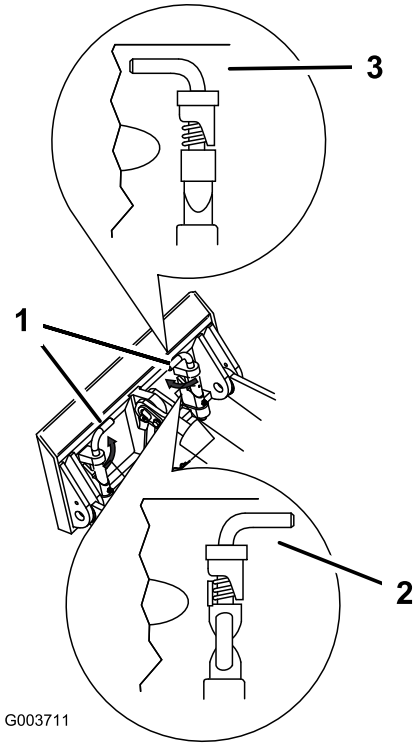


g003711

**Figure 24**

1. Quick-attach pins (engaged position)
2. Disengaged position
3. Engaged position

## Connecting the Hydraulic Hoses

**⚠ WARNING**

**Hydraulic fluid escaping under pressure can penetrate skin and cause injury. Fluid injected into the skin must be surgically removed within a few hours by a doctor familiar with this form of injury; otherwise, gangrene could result.**

- **Ensure that all hydraulic-fluid hoses and lines are in good condition and all hydraulic connections and fittings are tight before applying pressure to the hydraulic system.**
- **Keep your body and hands away from pinhole leaks or nozzles that eject high-pressure hydraulic fluid.**
- **Use cardboard or paper to find hydraulic leaks; never use your hands.**

**⚠ CAUTION**

**Hydraulic couplers, hydraulic lines and valves, and hydraulic fluid may be hot. Contact with hot components could cause a burn, resulting in minor or moderate injury.**

- **Wear gloves when operating the hydraulic couplers.**
- **Allow the machine to cool before touching hydraulic components.**
- **Do not touch hydraulic fluid spills.**

If the attachment requires hydraulics for operation, connect the hydraulic hoses as follows:

1. Shut off the engine.
2. Turn the key to the RUN position, but do not start the machine.
3. Press the auxiliary hydraulic control switch back and forth to relieve pressure at the hydraulic couplers.
4. Turn the key to the OFF position and remove it.
5. Remove the protective covers from the hydraulic connectors on the machine.
6. Ensure that all foreign matter is cleaned from the hydraulic connectors.
7. Push the attachment male connector into the female connector on the machine.

   **Note:** When you connect the attachment male connector first, you relieve any pressure built up in the attachment.
8. Push the attachment female connector onto the male connector on the machine.
9. Confirm that the connection is secure by pulling on the hoses.

## Removing an Attachment

1. Park the machine on a level surface.
2. Lower the attachment to the ground.
3. Shut off the engine and remove the key.
4. Disengage the quick-attach pins by turning them to the outside.
5. If the attachment uses hydraulics, do the following:
   A. Turn the key to the RUN position, but do not start the machine.
   B. Press the auxiliary hydraulic control switch back and forth to relieve pressure at the hydraulic couplers.
   C. Turn the key to the OFF position and remove it.
   D. Slide the collars back on the hydraulic couplers and disconnect them.

      ***Important:*** **Connect the attachment hoses together to prevent hydraulic system contamination during storage.**

   E. Install the protective covers onto the hydraulic couplers on the machine.
6. Start the engine, tilt the mount plate forward, and back the machine away from the attachment.

# *After Operation*

# After Operation Safety

## General Safety

- Engage the parking brake (if equipped), lower the loader arms, shut off the engine, remove the key, wait for all movement to stop, and allow the machine to cool before adjusting, cleaning, storing, or servicing it.
- Clean debris from the attachments, drives, mufflers, and engine to help prevent fires. Clean up oil or fuel spills.
- Keep all parts in good working condition and all hardware tightened.
- Do not touch parts that may be hot from operation. Allow them to cool before attempting to maintain, adjust, or service the machine.
- Use care when loading or unloading the machine into a trailer or truck.

# Retrieving a Stuck Machine

If the machine becomes stuck (e.g., in muddy conditions), pull the machine back into a stable position using either both front tie-down/lift points or both rear tie-down points simultaneously.

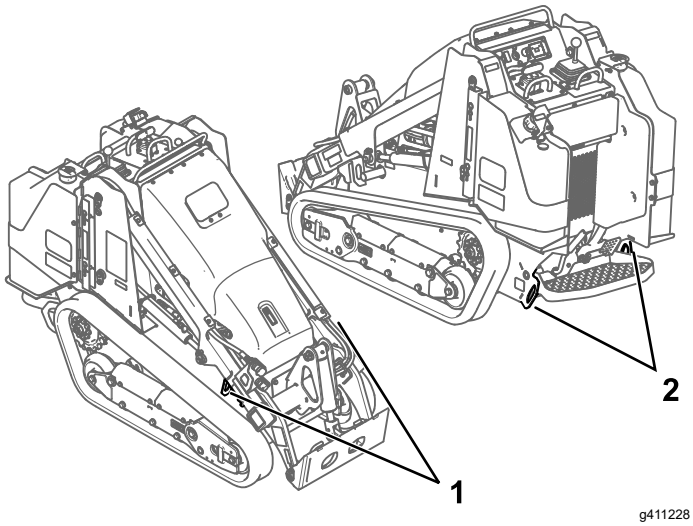


**Figure 25**

1. Front tie-down/lift points
2. Rear tie-down points

# Moving a Non-Functioning Machine

***Important:*** **Do not tow or pull the machine without first opening the tow valves, or you will damage the hydraulic system.**

1. Shut off the engine and remove the key.
2. Open the hood and secure the hood prop.
3. Using a wrench, turn the tow valves on the hydraulic pumps twice counterclockwise.

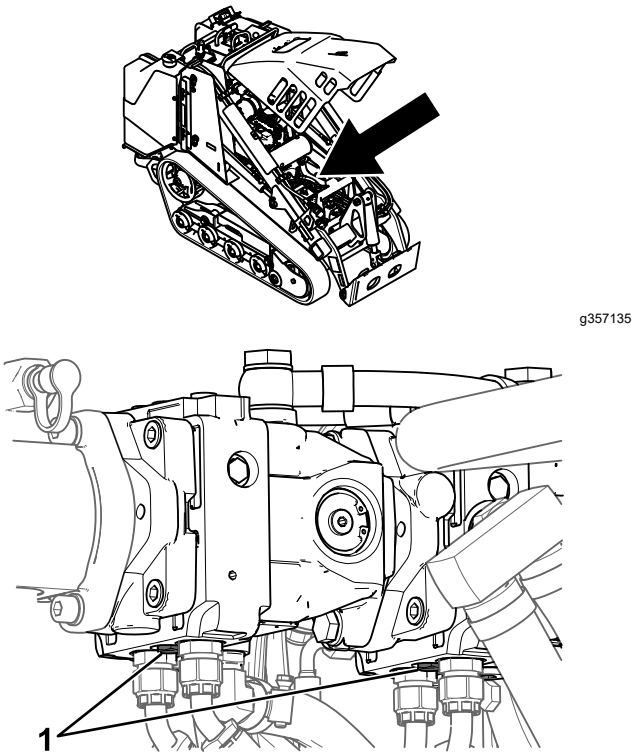


**Figure 26**

1. Tow valve

4. Disengage the parking brake.
5. Tow the machine as required.
6. After repairing the machine, close the tow valves before operating it.

# Hauling the Machine

Use a heavy-duty trailer or truck to haul the machine. Use a full-width ramp. Ensure that the trailer or truck has all the necessary brakes, lighting, and marking as required by law. Please carefully read all the safety instructions. Knowing this information could help you or bystanders avoid injury. Refer to your local ordinances for trailer and tie-down requirements.

**⚠ WARNING**

**Driving on the street or roadway without turn signals, lights, reflective markings, or a slow-moving-vehicle emblem is dangerous and can lead to accidents causing personal injury.**

**Do not drive the machine on a public street or roadway.**

## Selecting a Trailer

**⚠ WARNING**

**Loading a machine onto a trailer or truck increases the possibility of tip-over and could cause serious injury or death (Figure 27).**

- **Use only full-width ramps.**
- **Ensure that the length of ramp is at least 4 times as long as the height of the trailer or truck bed to the ground. This ensures that ramp angle does not exceed 15 degrees on flat ground.**

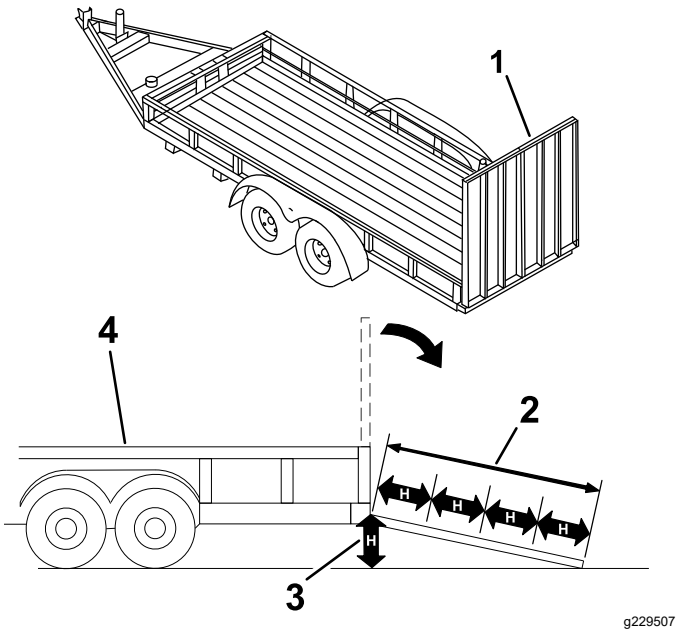


**Figure 27**

1. Full-width ramp(s) in stowed position
2. Ramp is at least 4 times as long as the height of the trailer or truck bed to the ground
3. H=height of the trailer or truck bed to the ground
4. Trailer

# Loading the Machine

**⚠ WARNING**

**Loading or unloading a machine onto a trailer or truck increases the possibility of tip-over and could cause serious injury or death.**

- **Use extreme caution when operating a machine on a ramp.**
- **Load and unload the machine with the heavy end up the ramp.**
- **Avoid sudden acceleration or deceleration while driving the machine on a ramp as this could cause a loss of control or a tip-over situation.**

1. If using a trailer, connect it to the towing vehicle and connect the safety chains.
2. If applicable, connect the trailer brakes.
3. Lower the ramp(s).
4. Lower the loader arms.
5. Load the machine onto the trailer with the heavy end up the ramp, carrying loads low, as shown.
   - If the machine has a **full** load-bearing attachment (e.g., bucket) or a non-load-bearing attachment (e.g., trencher), drive the machine forward up the ramp.
   - If the machine has an **empty** load-bearing attachment or no attachment, back the machine up the ramp.

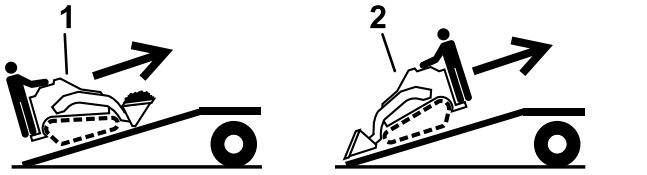


**Figure 28**

1. Machine with full attachment or non-load-bearing attachment—drive the machine forward up the ramp(s).
2. Machine with empty or no attachment—back the machine up the ramp(s).

6. Lower the loader arms all the way down.
7. Engage the parking brake (if equipped), shut off the engine, and remove the key.
8. Use the metal tie-down loops on the machine to securely fasten the machine to the trailer or truck with straps, chains, cable, or ropes. Refer to local regulations for tie-down requirements.

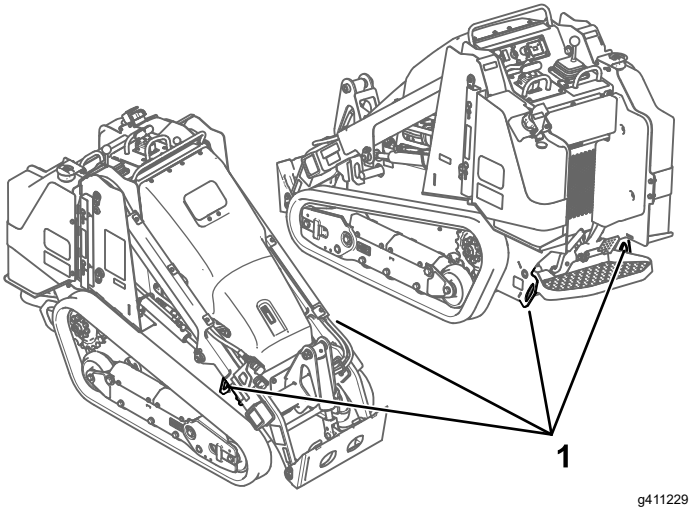


**Figure 29**

1. Tie-down loops

# Unloading the Machine

1. Lower the ramp(s).
2. Unload the machine from the trailer with the heavy end up the ramp, carrying loads low.
   - If the machine has a **full** load-bearing attachment (e.g., bucket) or a non-load-bearing attachment (e.g., trencher), back it down the ramp.
   - If the machine has an **empty** load-bearing attachment or no attachment, drive it forward down the ramp.

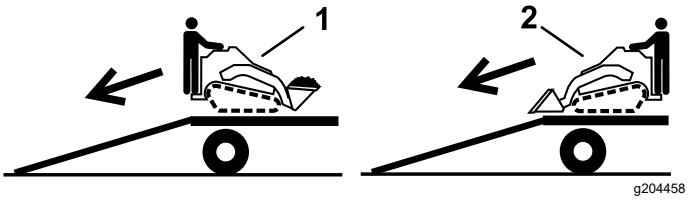


**Figure 30**

1. Machine with full attachment or non-load-bearing attachment—back the machine down the ramp(s).
2. Machine with empty or no attachment—drive the machine forward down the ramp(s).

# Lifting the Machine

Remove any attachments and lift the machine using the 4 lift points.

Do not exceed a 20-degree angle when lifting the machine; use the minimum chain lengths provided below.

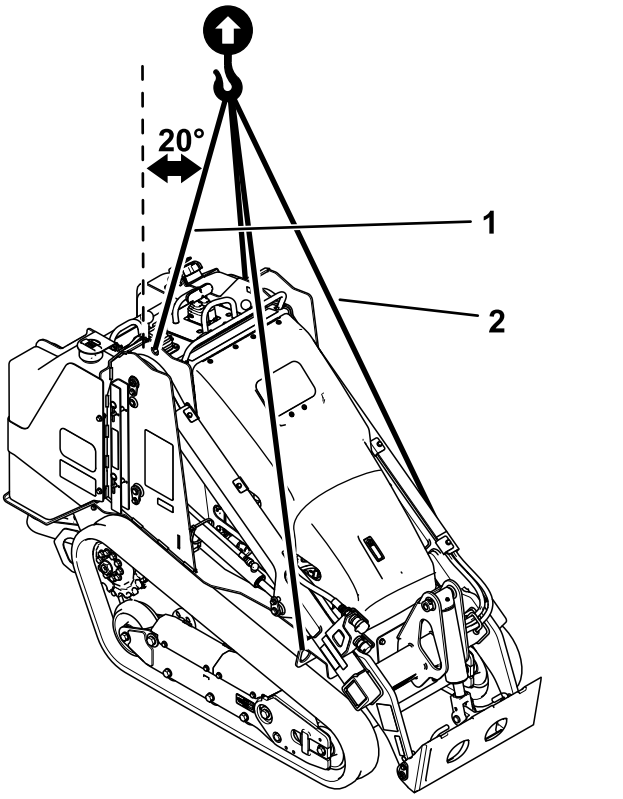


**Figure 31**

1. Chain length for rear lift point (2)—118.9 cm (46.8 inches)
2. Chain length for front lift point (2)—206.2 cm (81.2 inches)

# Maintenance

**Note:** Determine the left and right sides of the machine from the normal operating position.

## Maintenance Safety

**⚠ CAUTION**

**If you leave the key in the switch, someone could accidently start the engine and seriously injure you or other bystanders.**

**Remove the key from the switch before you perform any maintenance.**

- Park the machine on a level surface, disengage the auxiliary hydraulics, lower the attachment, engage the parking brake (if equipped), shut off the engine, and remove the key. Wait for all movement to stop and allow the machine to cool before adjusting, cleaning, storing, or repairing it.
- Clean up oil or fuel spills.
- Do not allow untrained personnel to service the machine.
- Use jack stands to support the components when required.
- Carefully release pressure from components with stored energy; refer to Relieving Hydraulic Pressure (page 49).
- Disconnect the battery before making any repairs; refer to Using the Battery-Disconnect Switch (page 38).
- Keep your hands and feet away from the moving parts. If possible, do not make adjustments with the engine running.
- Keep all parts in good working condition and all hardware tightened. Replace all worn or damaged decals.
- Do not tamper with the safety devices.
- Use only Toro-approved attachments. Attachments can change the stability and the operating characteristics of the machine. You may void the warranty if you use the machine with unapproved attachments.
- Use only genuine Toro replacement parts.
- If any maintenance or repair requires the loader arms to be in the raised position, secure the arms in the raised position with the hydraulic-cylinder lock(s).

## Recommended Maintenance Schedule(s)

| Maintenance Service Interval | Maintenance Procedure |
|---|---|
| After the first 8 hours | • Check and adjust the track tension.<br>• Replace the hydraulic filter. |
| After the first 50 hours | • Check and adjust the track tension. |
| Before each use or daily | • Grease the machine. (Grease immediately after every washing.)<br>• Check the air-filter-service indicator.<br>• Check the engine-oil level.<br>• Drain water and other contaminants from the water separator.<br>• Clean the tracks and check for excessive wear and proper tension.<br>• Clean the screen, oil cooler, and front of the radiator (more often in dirty or dusty conditions).<br>• Check and clean the radiator screen<br>• Check the coolant level in the expansion tank.<br>• Test the parking brake.<br>• Check the alternator-belt condition and tension.<br>• Remove debris from the machine.<br>• Check for loose fasteners. |
| Every 25 hours | • Remove the air-cleaner cover, clean out debris, and check the air-filter-service indicator.<br>• Check the hydraulic-fluid level. |

| Maintenance Service Interval | Maintenance Procedure |
|---|---|
| Every 50 hours | • Check the battery condition.<br>• Check and adjust the track tension. |
| Every 100 hours | • Check the cooling system hoses.<br>• Check the hydraulic lines for leaks, loose fittings, kinked lines, loose mounting supports, wear, weather, and chemical deterioration.<br>• Check for dirt buildup in the chassis. |
| Every 250 hours | • Change the engine oil and filter. (Service more frequently if conditions are extremely dusty or sandy.)<br>• Replace the hydraulic filter. |
| Every 400 hours | • Check the fuel lines and connections for deterioration, damage, or loose connections. |
| Every 500 hours | • Replace the water separator filter.<br>• Replace the in-line fuel filter<br>• Change the engine coolant.<br>• Replace the alternator belt. (Refer to the engine owner's manual for instructions.)<br>• Change the hydraulic fluid. |
| Every 600 hours | • Replace the safety air filter. |
| Every 1,500 hours or 2 years, whichever comes first | • Replace all moving hydraulic hoses. |
| Yearly or before storage | • Check and adjust the track tension.<br>• Touch up chipped paint. |
| Every 2 years | • Drain and clean the fuel tank(s)—Authorized Service Dealer only. |

***Important:*** **Refer to your engine owner's manual for additional maintenance procedures.**

# *Pre-Maintenance Procedures*

# Using the Cylinder Locks

**⚠ WARNING**

**The loader arms may lower when in the raised position, crushing anyone under them.**

**Install the cylinder lock(s) before performing maintenance that requires raised loader arms.**

## Installing the Cylinder Locks

1. Remove the attachment.
2. If needed, open the hood and secure the prop rod.

   **Note:** You cannot open the hood after raising the loader arms.
3. Raise the loader arms to the fully raised position.
4. Shut off the engine and remove the key.
5. Remove the 2 pins securing the cylinder lock to the posts on the side of the machine.
6. Slide the cylinder lock over the lift-cylinder rod.

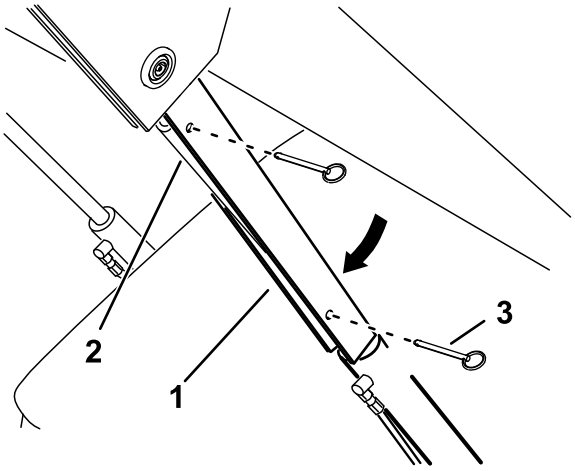


g365284

**Figure 32**

1. Cylinder lock
2. Lift-cylinder rod
3. Pin (2)

7. Repeat step 5 and 6 for the other side of the machine.
8. **Slowly** lower the loader arms until the cylinder locks contact the cylinder bodies and rod ends.

## Removing and Storing the Cylinder Locks

***Important:*** **Remove the cylinder locks from the rods and fully secure them in the storage position before operating the machine.**

1. Start the engine.
2. Raise the loader arms to the fully raised position.
3. Shut off the engine and remove the key.
4. Remove the pins securing the cylinder locks.
5. Place the cylinder locks on the posts on the sides of the machine and secure with the pins.
6. Lower the loader arms.
7. If the hood is open, close it.

# Accessing Internal Components

**⚠ WARNING**

**Opening or removing covers, hoods, and screens while the engine is running could allow you to contact moving parts, seriously injuring you.**

**Before opening any of the covers, hoods, and screens, shut off the engine, remove the key from the key switch, and allow the engine to cool.**

## Opening the Hood

1. Use the latch key to unlock the lever.

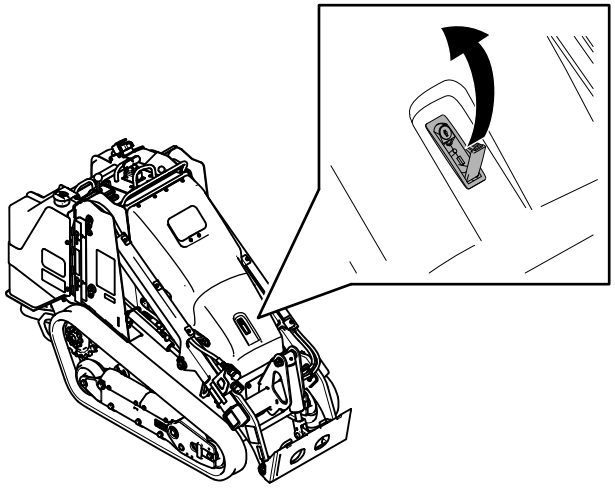

g365296

**Figure 33**

2. Use the lever to lift open the hood
3. Secure the prop rod.

# Closing the Hood

1. Lift up on the tab securing the prop rod.

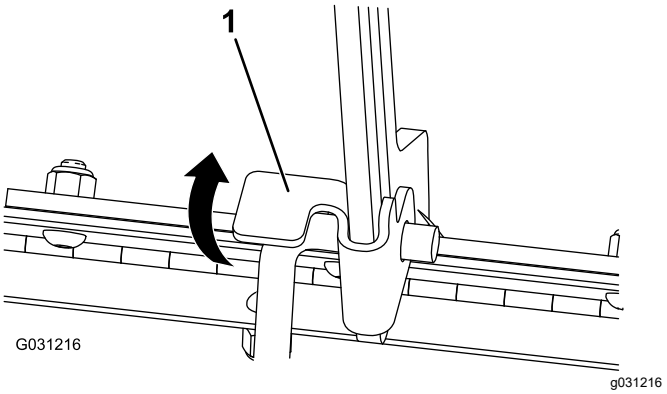


**Figure 34**

1. Prop-rod tab

2. Lower the hood and secure it by pushing down on the front of the hood until it locks in place.
3. Use the latch key to secure the latch.

# Removing the Console Plate

1. Remove the 2 side cushions.

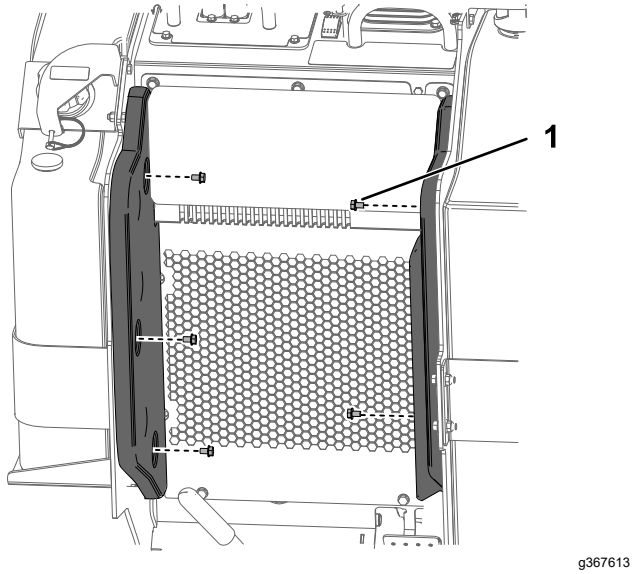


**Figure 35**

1. Hex-washer head bolt—5/16 x 1/2 inch (5)

2. Remove the console plate.

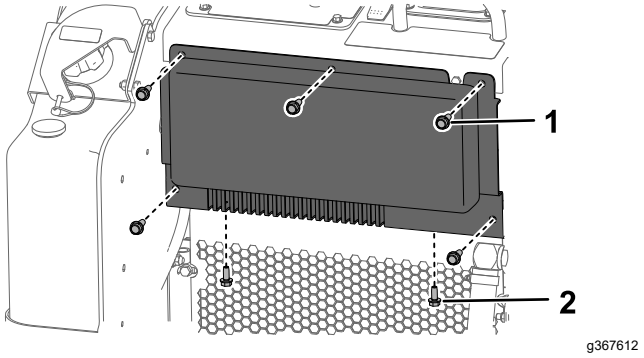


**Figure 36**

1. Hex-washer head bolt—3/8 x 1 inch (5)
2. Hex-washer head bolt—5/16 x 3/4 inch (2)

3. Loosen the hose clamp on the hose and disconnect the hose from the air box.

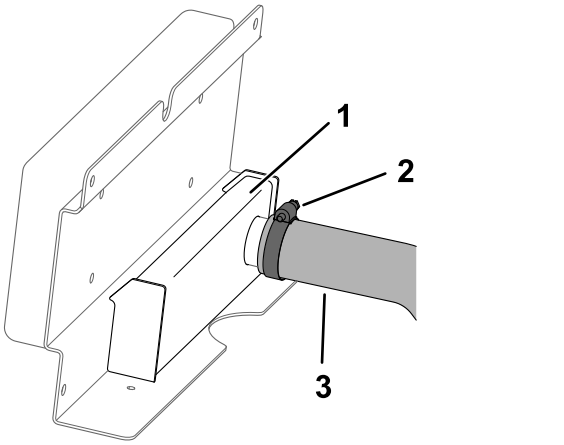


**Figure 37**

1. Air box
2. Hose clamp
3. Hose

# Removing the Front Cover

1. Raise the loader arms and secure with the cylinder locks.
2. Remove the front cover.

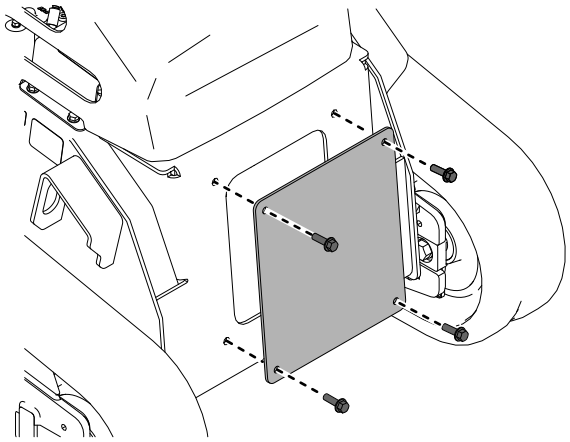

g365300

**Figure 38**

# Lubrication

## Greasing the Machine

**Service Interval:** Before each use or daily (Grease immediately after every washing.)

**Grease Type:** General-purpose grease.

1. Park the machine on a level surface, engage the parking brake, and lower the loader arms.
2. Shut off the engine and remove the key.
3. Clean the grease fittings with a rag.

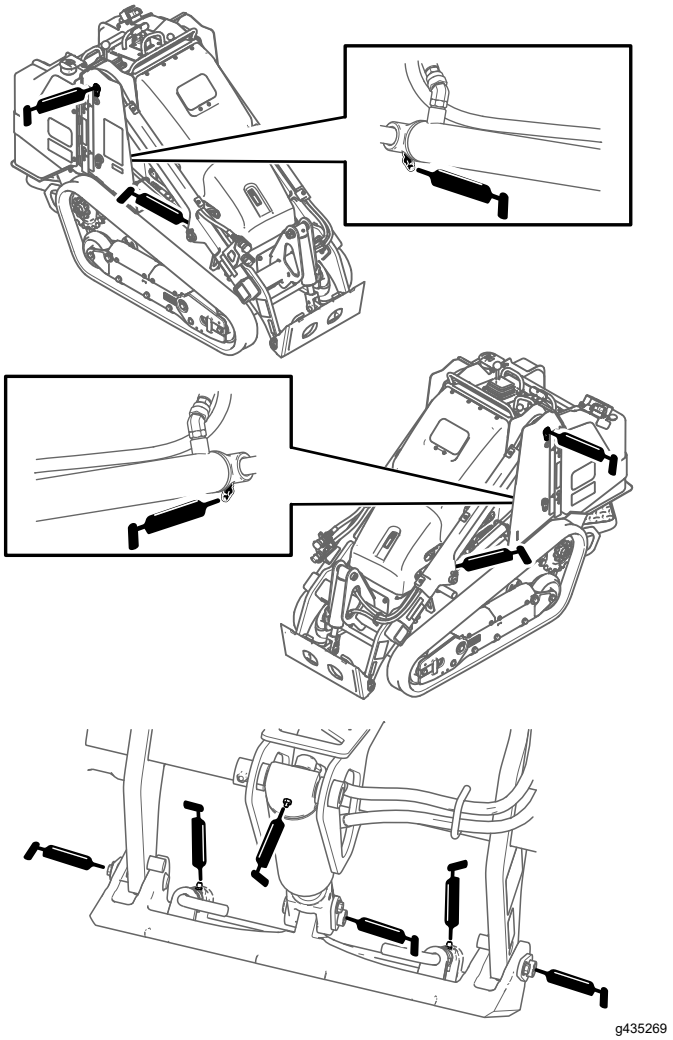


**Figure 39**

4. Connect a grease gun to each fitting.
5. Pump grease into the fittings until grease begins to ooze out of the bearings (approximately 3 pumps).
6. Wipe up any excess grease.

# Engine Maintenance

## Engine Safety

- Shut off the engine before checking the oil or adding oil to the crankcase.
- Do not change the engine governor setting or overspeed the engine.
- Keep your hands, feet, face, other body parts, and clothing away from the muffler and other hot surfaces.

## Servicing the Air-Cleaner

**Service Interval:** Before each use or daily—Check the air-filter-service indicator.

Every 25 hours—Remove the air-cleaner cover, clean out debris, and check the air-filter-service indicator.

Every 600 hours—Replace the safety air filter.

***Important:*** **To prevent engine damage, always operate the engine with the air filter and cover installed.**

***Important:*** **Replace the primary air-cleaner filter only when the service indicator shows red. Changing the air filter before it is necessary only increases the chance of dirt entering the engine when you remove the filter.**

### Servicing the Air-Cleaner Cover and Body

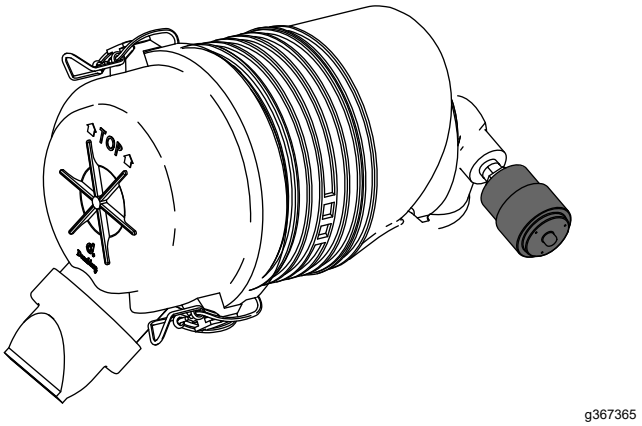


**Figure 40**

1. Park the machine on a level surface, engage the parking brake, and lower the loader arms.
2. Open the hood and secure the prop rod.

   **Note:** You cannot open the hood after raising the loader arms.

3. Raise the loader arms enough to access the air cleaner cover and filters.
4. Shut off the engine and remove the key.
5. Check the air-cleaner body for damage that could cause an air leak. Check the whole intake system for leaks, damage, or loose hose clamps. Replace or repair any damaged components.
6. Release the latches on the air cleaner cover and pull the cover off.

   ***Important:*** **Do not remove the air filter.**

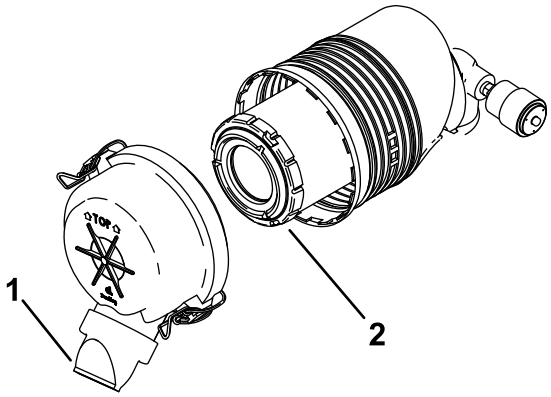


g367366

**Figure 41**

1. Dust cap
2. Filter

7. Squeeze the dust cap sides to open it and knock the dust out.
8. Clean the inside of the cover with compressed air that is under 205 kPa (30 psi).

   ***Important:*** **Do not use compressed air on the air-cleaner body.**
9. Check the service indicator.
   - If the service indicator is clear, install the cover with the dust cap oriented downward and secure the latches.
   - If the service indicator is red, replace the air filter.

# Replacing the Filter(s)

1. Gently slide the primary filter out of the air-cleaner body.

   **Note:** Avoid knocking the filter into the side of the body.

   ***Important:*** **Do not attempt to clean the filter.**

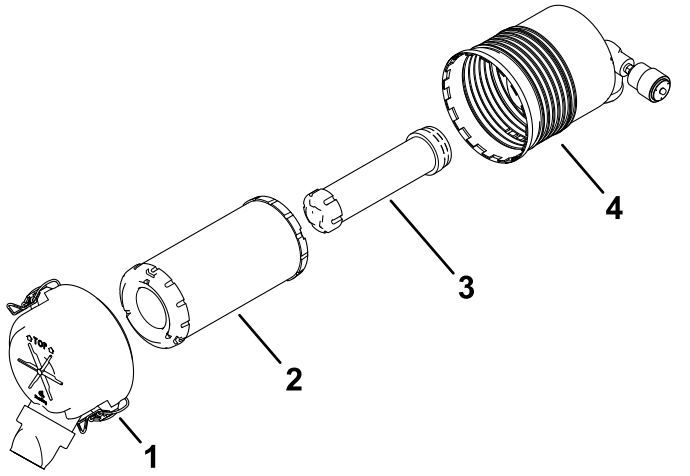


g435274

**Figure 42**

1. Air-cleaner cover
2. Primary filter
3. Safety filter
4. Air-filter body

2. If replacing the safety filter, gently slide the primary filter out of the air-cleaner body.
3. Inspect the new filter(s) for tears, an oily film, or damage to the rubber seal. Look into the filter while shining a bright light on the outside of the filter; holes in the filter appear as bright spots.

   If the filter is damaged, do not use it.
4. Carefully install the filter(s).

   **Note:** Ensure that each filter is fully seated by pushing on the outer rim of the filter while installing it.

   ***Important:*** **Do not press on the soft inside area of the filter.**
5. Install the air-cleaner cover with the dust cap oriented downward as shown in Figure 41 and secure the latches.
6. Close the hood.
7. Lower the loader arms.

# Servicing the Engine Oil

**Service Interval:** Before each use or daily—Check the engine-oil level.

Every 250 hours—Change the engine oil and filter. (Service more frequently if conditions are extremely dusty or sandy.)

## Engine-Oil Specifications

The engine ships with oil in the crankcase; however, check the oil level before and after you first start the engine. Check the oil level before operating the machine each day or each time you use the machine.

**Crankcase capacity:** 3.4 L (3.6 qt) with the filter

**Preferred engine oil:** Toro Premium Engine Oil

If using an alternate oil, use high-quality, low-ash engine oil that meets or exceeds the following specifications:

- API service category CJ-4 or higher
- ACEA service category E6
- JASO service category DH-2

***Important:*** **Using engine oil other than API classification CJ-4 or higher, ACEA E6, or JASO DH-2 may cause the diesel particulate filter to plug or cause engine damage.**

Use the following engine oil viscosity grade:

- SAE 10W-30 (all temperatures)
- SAE 15W-40 (above 0° F)

**Note:** Toro Premium Engine oil is available from your Authorized Service Dealer.

## Checking the Engine-Oil Level

1. Park the machine on a level surface, engage the parking brake, and lower the loader arms.
2. Open the hood and secure the prop rod.

   **Note:** You cannot open the hood after raising the loader arms.
3. Raise the loader arms and secure them with the cylinder locks.
4. Shut off the engine, remove the key, and allow the engine to cool.
5. Check the oil and add additional oil as needed.

   ***Important:*** **Do not overfill the crankcase with oil; if the oil in the crankcase is too high and you run the engine, you may damage the engine.**

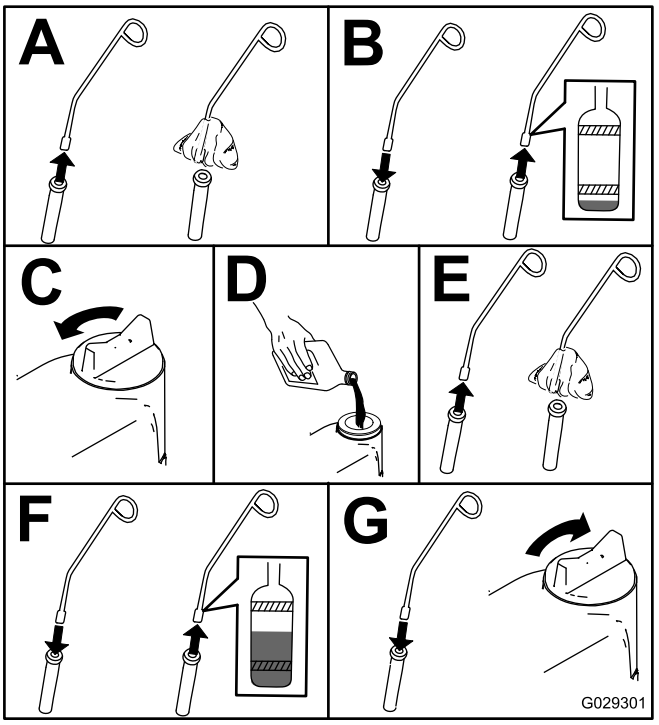


g029301

**Figure 43**

6. Remove the cylinder locks and lower the loader arms.
7. Close the hood.

# Changing the Engine Oil and Filter

1. Start the engine and let it run for 5 minutes.

   **Note:** This warms the oil so that it drains better.

2. Park the machine on a level surface, engage the parking brake, and lower the loader arms.
3. Open the hood and secure the prop rod.

   **Note:** You cannot open the hood after raising the loader arms.

4. Raise the loader arms and secure them with the cylinder locks.
5. Shut off the engine and remove the key.
6. Drain the oil beneath the platform.

**⚠ CAUTION**

**Components will be hot if the machine has been running. If you touch hot components, you may be burned.**

**Use care to avoid touching hot components while changing the oil and/or filter.**

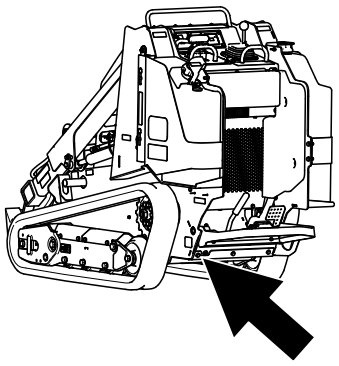

g411226

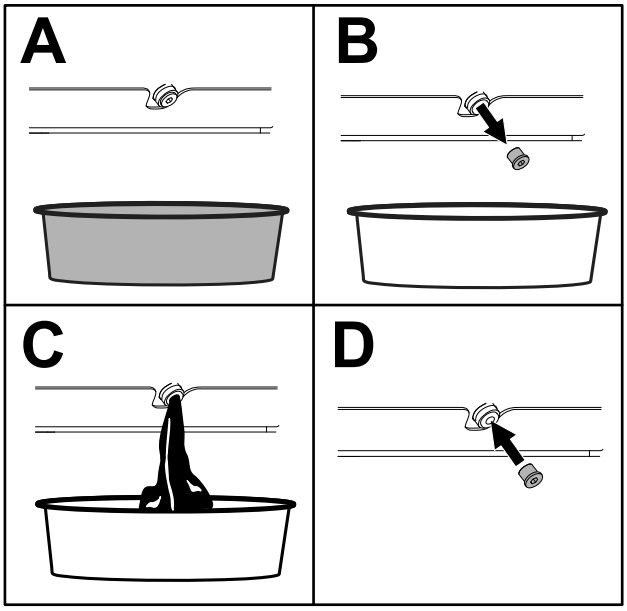


g360882

**Figure 44**

7. Torque the drain plug to 46 to 56 N·m (34 to 42 ft-lb).
8. Place a shallow pan or rag under the filter to catch oil.
9. Change the oil filter as shown.

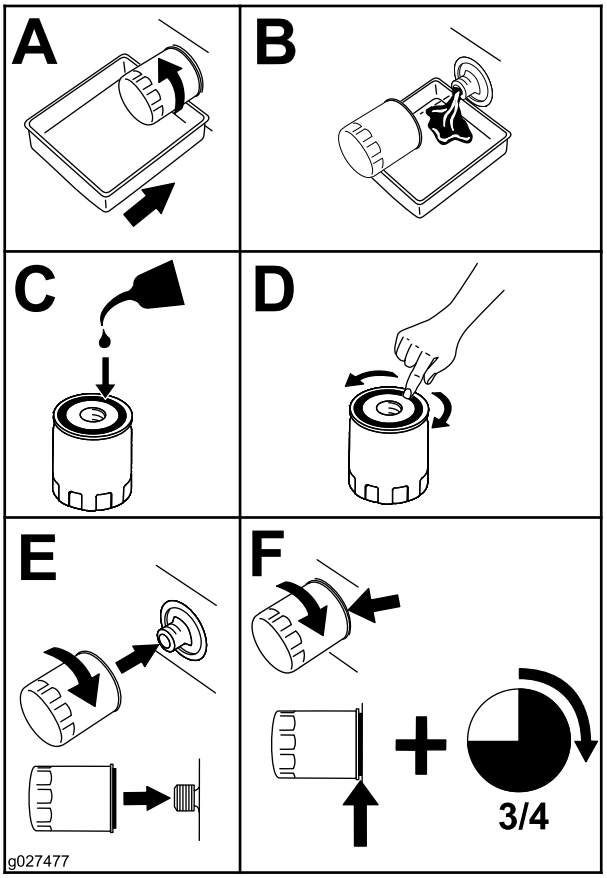


**Figure 45**

10. Remove the oil-fill cap and slowly pour approximately 80% of the specified amount of oil in through the valve cover.
11. Check the oil level.
12. Slowly add additional oil to bring the level to the upper hole on the dipstick.
13. Replace the fill cap.
14. Remove the cylinder locks and lower the loader arms.
15. Close the hood.

# *Fuel System Maintenance*

**⚠ DANGER**

**In certain conditions, fuel is extremely flammable and highly explosive. A fire or explosion from fuel can burn you and others and can damage property.**

**Refer to Fuel Safety (page 17) for a complete list of fuel related precautions.**

## Draining the Water Separator

**Service Interval:** Before each use or daily

1. Park the machine on a level surface, engage the parking brake, and lower the loader arms.
2. Shut off the engine and remove the key.
3. Open the hood.
4. Place a clean container under the water separator.

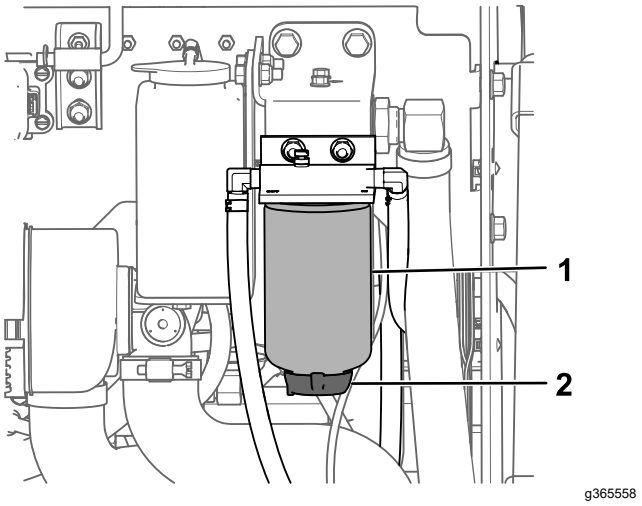


**Figure 46**

1. Water separator
2. Drain valve

5. Loosen the drain valve on the bottom of the filter canister and allow the water to drain.
6. When finished, tighten the drain valve.
7. Close the hood.

# Replacing the Water Separator Filter

**Service Interval:** Every 500 hours

1. Park the machine on a level surface, engage the parking brake, and lower the loader arms.
2. Shut off the engine and remove the key.
3. Open the hood.
4. Clean the area where the filter canister mounts.

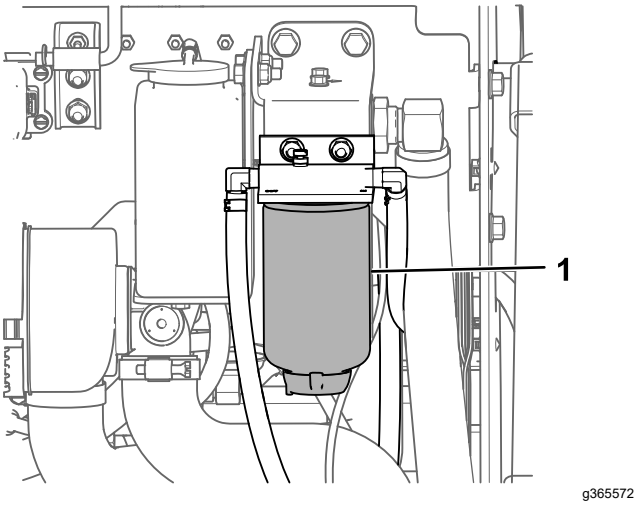


**Figure 47**

1. Water separator

5. Remove the filter canister and clean the mounting surface.
6. Lubricate the gasket on the new filter canister with clean oil.
7. Fill the canister with fuel.
8. Install the filter canister by hand until the gasket contacts the mounting surface, then rotate it an additional 1/2 turn .
9. Close the hood.

# Replacing the In-Line Fuel Filter

**Service Interval:** Every 500 hours

1. Park the machine on a level surface, engage the parking brake, and lower the loader arms.
2. Shut off the engine and remove the key.
3. Remove the console plate; refer to Removing the Console Plate (page 30).
4. Replace the filter as shown.

   **Note:** Ensure that the markings on the filter follow the fuel flow direction.

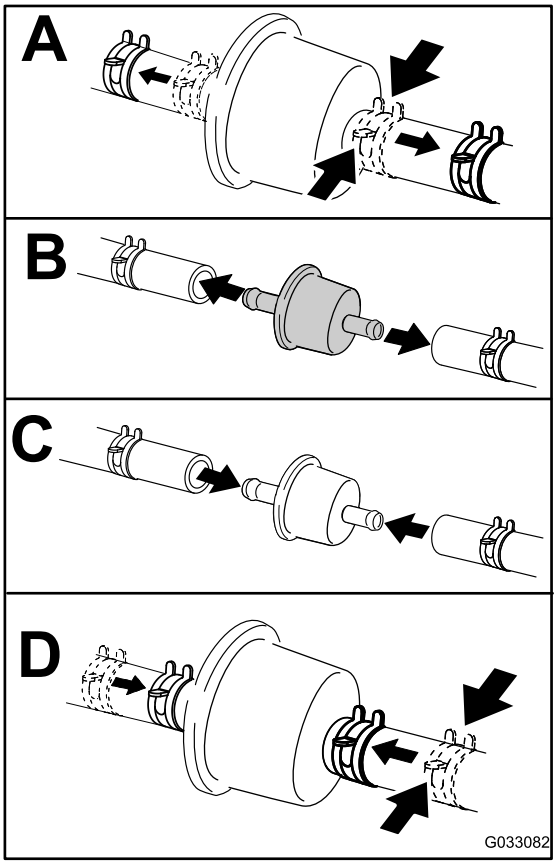


**Figure 48**

# Checking the Fuel Lines and Connections

**Service Interval:** Every 400 hours/Yearly (whichever comes first)

Inspect the fuel lines and connections for deterioration, damage, or loose connections. Tighten any loose connections and contact your Authorized Service Dealer for assistance in fixing damaged fuel lines.

# Bleeding the Fuel System

You must bleed the fuel system before starting the engine if any of the following situations have occurred:

- Initial startup of a new machine
- The engine has ceased running due to a lack of fuel.
- Maintenance has been performed upon fuel-system components (e.g., filter replaced).

1. Turn the key to the RUN position.
2. Let the fuel pump run for 2 minutes prior to starting the machine.

# Draining the Fuel Tank(s)

**Service Interval:** Every 2 years

Have an Authorized Service Dealer drain and clean the fuel tank(s).

# *Electrical System Maintenance*

# Electrical System Safety

- Disconnect the battery before making any repairs; refer to Using the Battery-Disconnect Switch (page 38).
- Charge the battery in an open, well-ventilated area, away from sparks and flames. Unplug the charger before connecting or disconnecting the battery. Wear protective clothing and use insulated tools.
- Battery acid is poisonous and can cause burns. Avoid contact with skin, eyes, and clothing. Protect your face, eyes, and clothing when working with a battery.
- Battery gases can explode. Keep cigarettes, sparks, and flames away from the battery.

# Using the Battery-Disconnect Switch

1. Park the machine on a level surface, engage the parking brake, and lower the loader arms.
2. Shut off the engine and remove the key.
3. Open the hood.
4. Turn the battery-disconnect switch to the ON or OFF position.

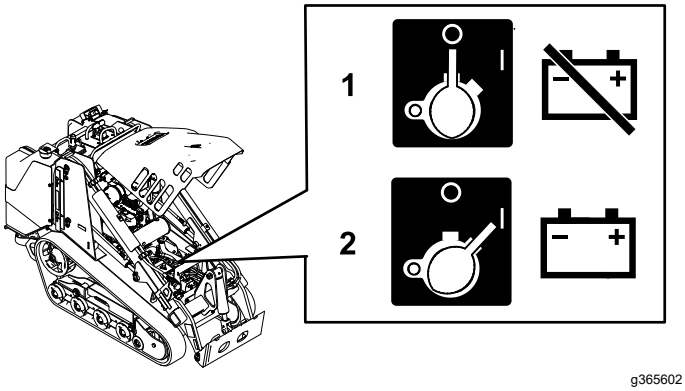


g365602

**Figure 49**

1. De-energize the machine—rotate the battery-disconnect switch to the OFF position.
2. Energize the machine—rotate the battery-disconnect switch to the ON position.

# Servicing the Battery

**Service Interval:** Every 50 hours

## Removing the Battery

**⚠ WARNING**

**Incorrect battery cable routing could damage the machine and cables, causing sparks. Sparks can cause the battery gasses to explode, resulting in personal injury.**

**Always disconnect the negative (black) battery cable before disconnecting the positive (red) cable.**

1. Park the machine on a level surface and engage the parking brake.
2. Raise the loader arms and secure them with the cylinder locks.
3. Shut off the engine and remove the key.
4. Disconnect the negative (black) ground cable from the battery post. Retain the fasteners.

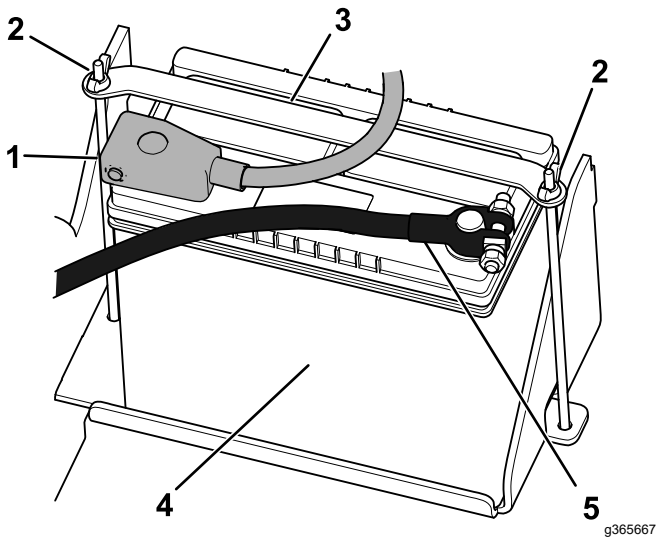


**Figure 50**

1. Positive cable
2. Wing nut and rod (2)
3. Strap
4. Negative cable
5. Battery

5. Slide the rubber cover off the positive (red) cable.
6. Disconnect the positive (red) cable from the battery post. Retain the fasteners.
7. Remove the wing nuts, rods, and strap.
8. Remove the battery.

## Charging the Battery

**⚠ WARNING**

**Charging the battery produces gasses that can explode.**

**Never smoke near the battery and keep sparks and flames away from battery.**

***Important:*** **Always keep the battery fully charged (1.265 specific gravity). This is especially important to prevent battery damage when the temperature is below 0°C (32°F).**

1. Remove the battery from the machine; refer to Removing the Battery (page 39).
2. Charge the battery for 4 to 8 hours at a rate of 3 to 4 A. Do not overcharge the battery.

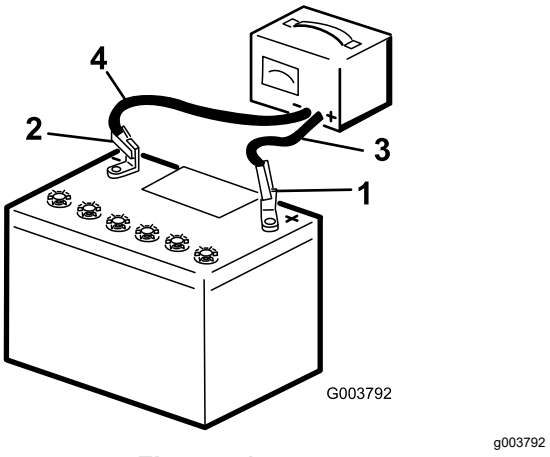


**Figure 51**

1. Positive battery post
2. Negative battery post
3. Red (+) charger lead
4. Black (-) charger lead

3. When the battery is fully charged, unplug the charger from the electrical outlet, then disconnect the charger leads from the battery posts.

## Cleaning the Battery

**Note:** Keep the terminals and the entire battery case clean, to help extend battery life.

1. Park the machine on a level surface, engage the parking brake (if equipped), and lower the loader arms.
2. Shut off the engine and remove the key.
3. Remove the battery from the machine; Removing the Battery (page 39).
4. Wash the entire case with a solution of baking soda and water.
5. Rinse the battery with clear water.
6. Coat the battery posts and cable connectors with Grafo 112X (skin-over) grease or petroleum jelly to prevent corrosion.
7. Install the battery; refer to Installing the Battery (page 40).

## Installing the Battery

**⚠ WARNING**

**Incorrect battery cable routing could damage the machine and cables, causing sparks. Sparks can cause the battery gasses to explode, resulting in personal injury.**

**Always connect the positive (red) battery cable before connecting the negative (black) cable.**

1. Place the battery on the battery tray and secure it with the strap, wing nuts, and rods.

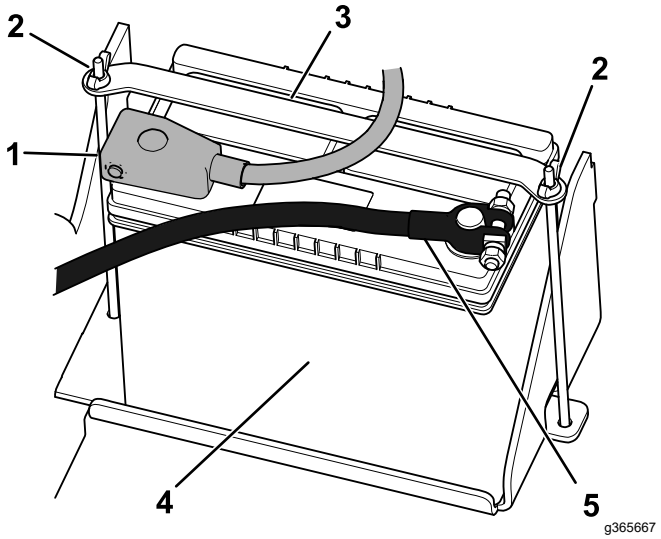


**Figure 52**

1. Positive cable
2. Wing nut and rod (2)
3. Strap
4. Negative cable
5. Battery

2. Using the fasteners previously removed, install the positive (red) battery cable to the positive (+) battery terminal.
3. Slide the red terminal boot onto the positive battery post.
4. Using the fasteners previously removed, install the negative (black) battery cable to the negative (-) battery terminal.
5. Close the hood.

## Servicing a Replacement Battery

The original battery is maintenance-free and does not require service. For servicing a replacement battery, refer to the battery manufacturer's instructions.

# Jump-Starting the Machine

**⚠ WARNING**

**Jump-starting the battery can produce gasses that can explode.**

**Do not smoke near the battery, and keep sparks and flames away from battery.**

1. Open the hood.
2. Check and clean corrosion from the battery terminals before jump-starting. Ensure that the connections are tight.

**⚠ CAUTION**

**Corrosion or loose connections can cause unwanted electrical voltage spikes at any time during the jump-starting procedure.**

**Do not attempt to jump-start the machine with loose or corroded battery terminals, or damage to the engine may occur.**

**⚠ DANGER**

**Jump-starting a weak battery that is cracked or frozen or has a low electrolyte level or an open/shorted battery cell can cause an explosion, resulting in serious personal injury.**

**Do not jump-start a weak battery if these conditions exist.**

3. Make sure that the booster battery is a good and fully charged lead-acid battery at 12.6 V or greater.

   **Note:** Use properly sized jumper cables with short lengths to reduce voltage drop between systems. Make sure that the cables are color coded or labeled for the correct polarity.

**⚠ WARNING**

**Batteries contain acid and produce explosive gases.**

- **Shield your eyes and face from the batteries at all times.**
- **Do not lean over the batteries.**

**Note:** Ensure that the vent caps are tight and level. Place a damp cloth, if available, over any vent caps on both batteries. Also ensure that the machines do not touch and that both electrical systems are off and at the same rated system voltage. These instructions are for negative ground systems only.

4. Connect the positive (+) cable to the positive (+) terminal of the discharged battery that is wired to the starter or solenoid as shown.

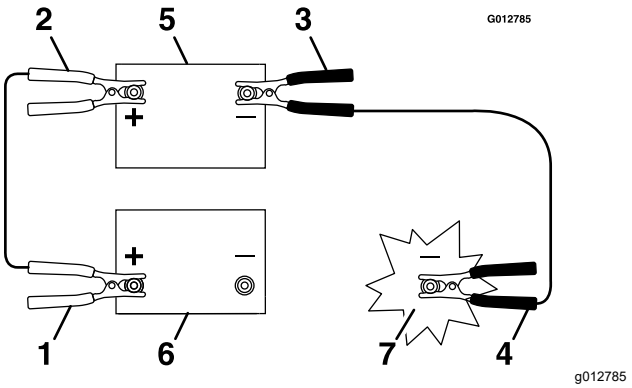


**Figure 53**

1. Positive (+) cable on discharged battery
2. Positive (+) cable on booster battery
3. Negative (–) cable on the booster battery
4. Negative (–) cable on the engine block
5. Booster battery
6. Discharged battery
7. Engine block

5. Connect the other end of the positive (+) jumper cable to the positive terminal of the battery in the other machine.
6. Connect an end of the negative (-) jumper cable to the negative post of the battery in the other machine.
7. Connect the other end of the negative (-) jumper cable to a ground point, such as an unpainted bolt or chassis member.
8. Start the engine in the other machine. Let it run a few minutes, then start your engine.
9. Remove the cables in the reverse order of connection.
10. Close the hood.

# Servicing the Fuses

The electrical system is protected by fuses. It requires no maintenance; however, if a fuse blows, check the component/circuit for a malfunction or a short.

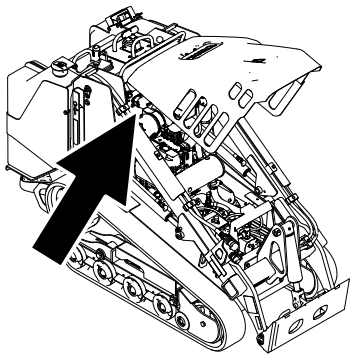

g365804

**Figure 54**

## Fuse Layout

<table>
<tr><th></th><th>1</th><th>2</th><th>3</th><th>4</th><th>5</th><th>6</th><th>7</th><th>8</th><th>9</th><th>10</th><th>11</th><th>12</th></tr>
<tr><td>A</td><td colspan="3" rowspan="2">(Relay)</td><td colspan="3" rowspan="2">(Relay)</td><td colspan="3" rowspan="2">(Relay)</td><td colspan="3" rowspan="2">(Relay)</td></tr>
<tr><td>B</td></tr>
<tr><td>C</td><td colspan="2">Key power<br>(20 A)</td><td>X</td><td colspan="3" rowspan="2">(Relay)</td><td colspan="3" rowspan="2">(Relay)</td><td colspan="3" rowspan="2">(Relay)</td></tr>
<tr><td>D</td><td colspan="2">Hour meter<br>(10 A)</td><td>X</td></tr>
<tr><td>E</td><td colspan="2">Power point/Light kit<br>(15 A)</td><td colspan="2">System power<br>(20 A)</td><td colspan="2">Auxiliary power<br>(10 A)</td><td colspan="2">Telematics<br>(10 A)</td><td colspan="2">Accessory power<br>(10 A)</td><td>Start circuit<br>(15 A)</td></tr>
</table>

**Note:** If the machine does not start, either the main circuit or the control panel/relay fuse could be blown.

# *Drive System Maintenance*

## Servicing the Tracks

**Service Interval:** After the first 8 hours—Check and adjust the track tension.

After the first 50 hours—Check and adjust the track tension.

Every 50 hours—Check and adjust the track tension.

Before each use or daily—Clean the tracks and check for excessive wear and proper tension.

### Cleaning the Tracks

1. Park the machine on a level surface and engage the parking brake.
2. With the bucket installed and angled downward, lower it into the ground so that the front of the traction unit lifts off the ground a few centimeters (inches).
3. Shut off the engine and remove the key.
4. Using a water hose or pressure washer, remove dirt from each track system.

***Important:*** **Ensure that you use high-pressure water to wash only the track area. Do not use a high-pressure washer to clean the rest of the traction unit. Do not use high pressure water between the drive sprocket and the traction unit or you may damage the motor seals. High-pressure washing can damage the electrical system and hydraulic valves or deplete grease.**

***Important:*** **Ensure that you fully clean the road wheels, front wheel, rear wheel, and drive sprocket. The road wheels should rotate freely when clean.**

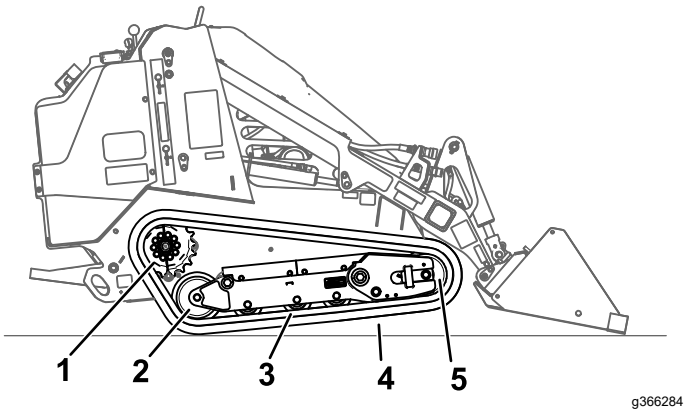


**Figure 55**

1. Sectional drive sprocket
2. Rear wheel
3. Road wheel (4)
4. Track
5. Front wheel

### Checking and Adjusting the Track Tension

Lift/support 1 side of the machine and using the weight of the track, verify that the gap between the bottom of the lip of the road wheel and the track is 13 mm (1/2 inch). If it is not, adjust the track tension using the following procedure.

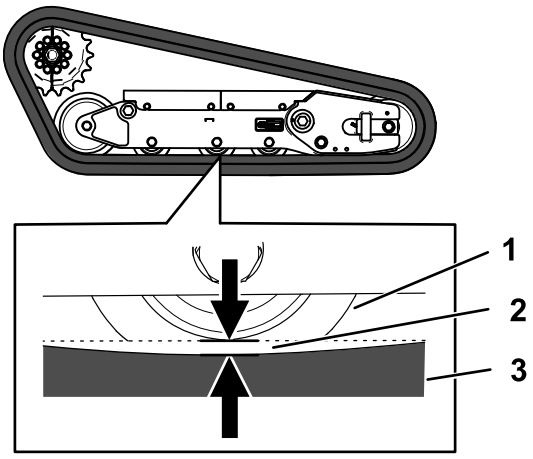


**Figure 56**

1. Road wheel
2. 13 mm (1/2 inch) gap
3. Track

1. Park the machine on a level surface, engage the parking brake, and lower the loader arms.
2. Shut off the engine and remove the key.
3. Raise the side of the machine that you are adjusting so that the track is off the ground.

4. Loosen the bolts on the rear cover and remove the cover.

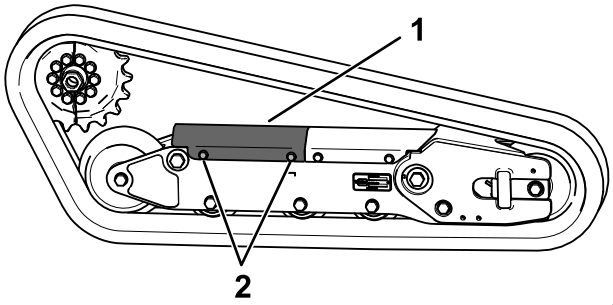


g366295

**Figure 57**

1. Rear cover
2. Bolt (2)

5. Loosen the jam nut and adjust the tensioning screw until the track deflection is 13 mm (1/2 inch).

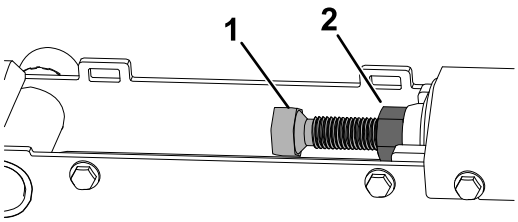


g363401

**Figure 58**

1. Tensioning screw
2. Jam nut

6. Tighten the jam nut.
7. Install the cover and tighten the bolts.
8. Repeat the procedure for the other track.
9. Drive the machine, then park the machine on a level surface, engage the parking brake, shut off the engine, and remove the key.
10. Verify that the track deflection is 13 mm (1/2 inch). Adjust if necessary.

# Replacing the Tracks

## Removing the Tracks

1. Remove any attachments.
2. Park the machine on a level surface, ensuring that only 1 sprocket half is engaged with the track.

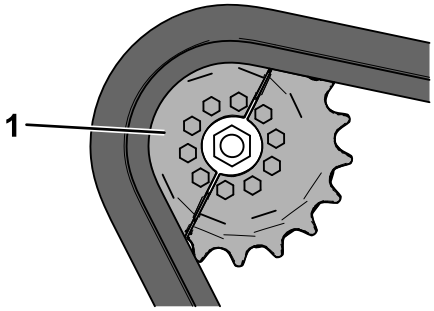


g366389

**Figure 59**

1. Sprocket half

3. Lower the loader arms.
4. Shut off the engine and remove the key.
5. Raise the machine off the ground so that the bottom of the track is at least 10.2 cm (4 inches) off the ground. Support the machine using jack stands.

   **Note:** Use jack stands rated for your machine.

**⚠ WARNING**

**Mechanical or hydraulic jacks may fail to support the machine and cause serious injury.**

**Use jack stands when supporting the machine.**

6. Loosen the bolts on the rear cover and remove the cover.

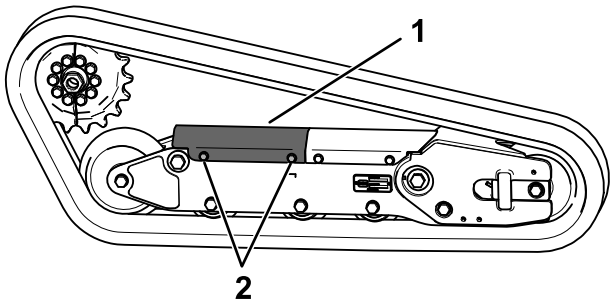


g366295

**Figure 60**

1. Rear cover
2. Bolt (2)

7. Loosen the jam nut and turn the tensioning screw to release the tension.

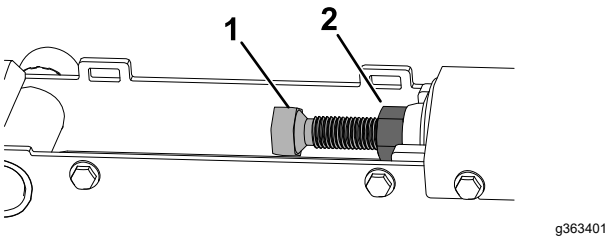


g363401

**Figure 61**

1. Tensioning screw
2. Jam nut

8. Remove the segment of the drive sprocket not engaged with the track.

   ***Important:*** **If you do not remove the sprocket segment, it may be difficult to install a new track without damaging it.**

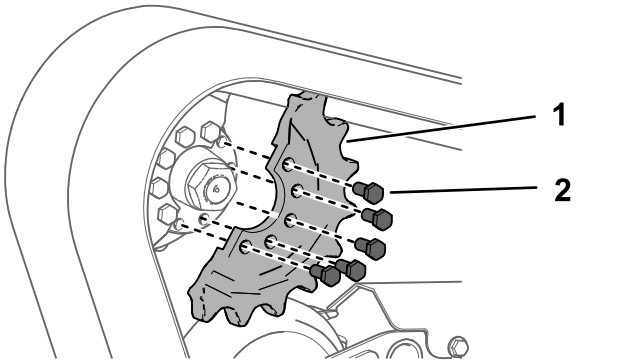


g366388

**Figure 62**

1. Bolt (5)
2. Sprocket half

9. Start the machine and disengage the parking brake.
10. Move the traction control forward until the other half of the drive sprocket is not engaged with the track

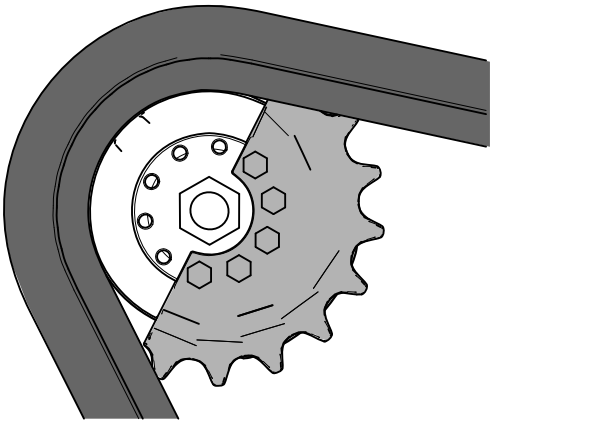

g366387

**Figure 63**

11. Shut off the engine and remove the key.
12. Remove the track from the track frame, drive hub, then front wheel.

## Installing the Tracks

1. Wrap the new track around the front wheel.

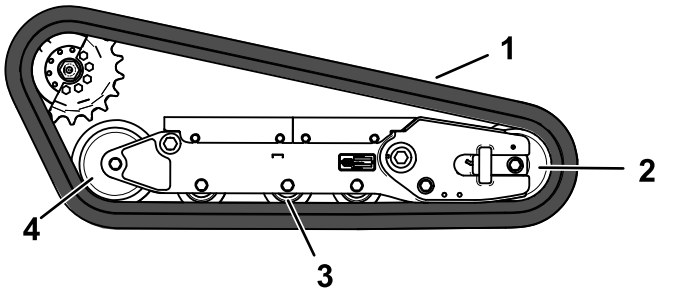


g366403

**Figure 64**

1. Track
2. Front wheel
3. Road wheel (4)
4. Rear wheel

2. Push the track under and between the road wheels and wrap it around the rear wheel.
3. Start the engine and disengage the parking brake.
4. Move the traction control forward until the drive sprocket half engages with the track.

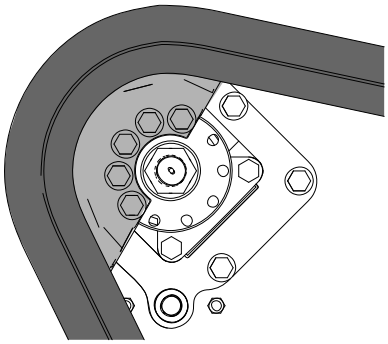

g366402

**Figure 65**

5. Shut off the engine and remove the key.

6. Apply thread-locking compound to the bolts of the drive sprocket half that you removed and install the other sprocket half. Torque the bolts to 80 to 99 N·m (59 to 73 ft-lb).

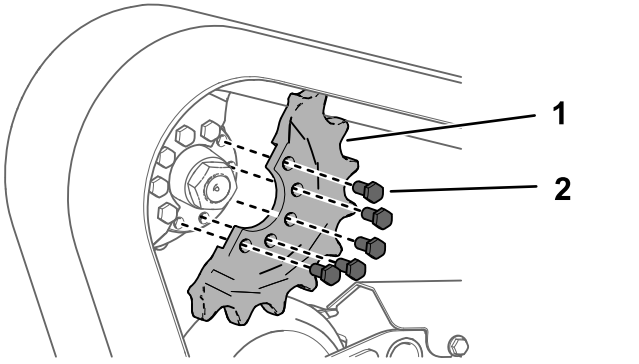


**Figure 66**

1. Bolt (5)
2. Sprocket half

7. Adjust the tensioning screw until the track deflection is 19 mm (3/4 inch).

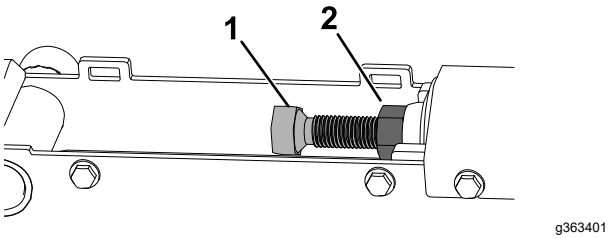


**Figure 67**

1. Tensioning screw
2. Jam nut

8. Tighten the jam nut.
9. Install the cover and tighten the bolts.
10. Repeat the procedure to replace the other track.
11. Lower the machine to the ground.
12. Drive the machine, then park the machine on a level surface, engage the parking brake, shut off the engine, and remove the key.
13. Verify that the track tension is correct; refer to Checking and Adjusting the Track Tension (page 43).

# *Cooling System Maintenance*

## Cooling System Safety

- Swallowing engine coolant can cause poisoning; keep out of reach from children and pets.
- Discharge of hot, pressurized coolant or touching a hot radiator and surrounding parts can cause severe burns.
  - Always allow the engine to cool at least 15 minutes before removing the radiator cap.
  - Use a rag when opening the radiator cap, and open the cap slowly to allow steam to escape.

## Servicing the Cooling System

**Service Interval:** Before each use or daily—Clean the screen, oil cooler, and front of the radiator (more often in dirty or dusty conditions).

Every 100 hours—Check the cooling system hoses.

### Cleaning the Radiator Screen

**Service Interval:** Before each use or daily

Remove any buildup of grass, dirt or other debris from the radiator screen with compressed air.

# Checking the Engine-Coolant Level

**Service Interval:** Before each use or daily—Check the coolant level in the expansion tank.

**Capacity:** 5 L (5.2 US qts)

**Type:** 50/50 solution of water and permanent ethylene-glycol antifreeze.

1. Park the machine on a level surface, engage the parking brake, and lower the loader arms.
2. Open the hood and secure the prop rod.

   **Note:** You cannot open the hood after raising the loader arms.
3. Raise the loader arms and secure them with the cylinder locks.
4. Shut off the engine, remove the key, and allow the engine to cool.
5. Check the coolant level in the expansion tank.

   **Note:** The coolant level should be at or above the mark on the side of the tank.

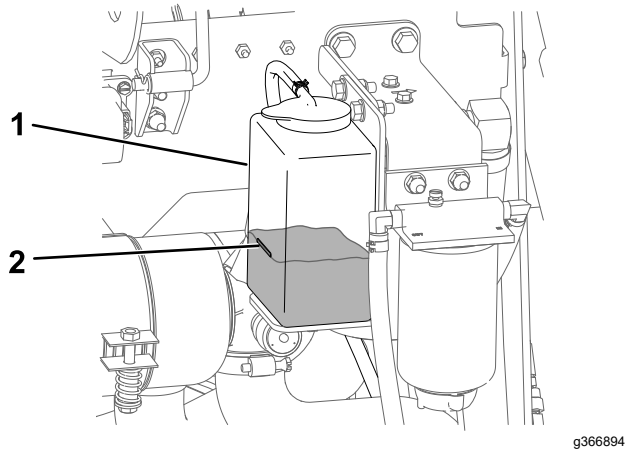


**Figure 68**

1. Expansion tank
2. Full mark

6. If the coolant level is low, remove the expansion tank cap and add a 50/50 mixture of water and permanent ethylene-glycol antifreeze.

   ***Important:*** **Do not overfill the expansion tank.**
7. Install the expansion-tank cap.
8. Remove the cylinder locks and lower the loader arms.
9. Close the hood.

# Changing the Engine Coolant

**Service Interval:** Every 500 hours

Have an Authorized Service Dealer change the engine coolant yearly.

If you need to add engine coolant, refer to Checking the Engine-Coolant Level (page 47).

# Brake Maintenance

## Testing the Parking Brake

**Service Interval:** Before each use or daily

1. Engage the parking-brake; refer to Parking-Brake Lever (page 14).
2. Start the engine.
3. Slowly attempt to drive the machine forward or rearward.
4. If the machine moves, contact your Authorized Service Dealer for service.

# Belt Maintenance

## Checking the Alternator-Belt Tension

**Service Interval:** Before each use or daily

Every 500 hours (Refer to the engine owner's manual for instructions.)

Proper tension of the belt allows 10 mm (3/8 inch) of deflection when a force of 10 kg (22 lb) is applied on the belt midway between the pulleys.

If the deflection is not 10 mm (3/8 inch), perform the following steps:

1. Loosen the alternator-mounting bolt.

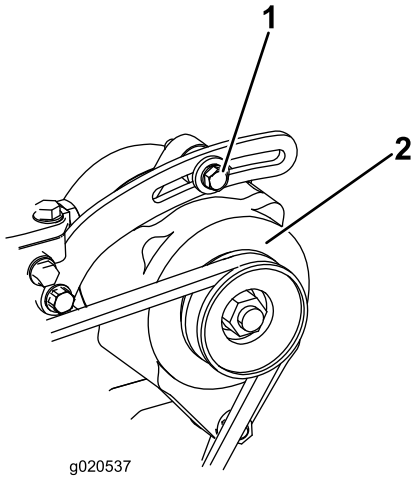


g020537

**Figure 69**

1. Mounting bolt
2. Alternator

2. Increase or decrease the alternator-belt tension and tighten the bolt.
3. Check the deflection of the belt again to ensure that the tension is correct.

# Controls System Maintenance

## Adjusting the Controls

The factory adjusts the controls before shipping the machine. However, after many hours of use, you may need to adjust the traction control alignment, the NEUTRAL position of the traction control, and the tracking of the traction control in the full forward position.

Contact your Authorized Service Dealer to adjust the controls of your machine.

# Hydraulic System Maintenance

## Hydraulic System Safety

- Seek immediate medical attention if fluid is injected into skin. Injected fluid must be surgically removed within a few hours by a doctor.
- Ensure that all hydraulic-fluid hoses and lines are in good condition and all hydraulic connections and fittings are tight before applying pressure to the hydraulic system.
- Keep your body and hands away from pinhole leaks or nozzles that eject high-pressure hydraulic fluid.
- Use cardboard or paper to find hydraulic leaks.
- Safely relieve all pressure in the hydraulic system before performing any work on the hydraulic system.

## Relieving Hydraulic Pressure

To relieve hydraulic pressure while the engine is on, disengage the auxiliary hydraulics and fully lower and retract the loader arms.

To relieve the pressure while the engine is off, cycle the loader-arm/attachment-tilt lever between the forward positions to lower the loader arms. Turn the key switch to the RUN position and press the auxiliary-hydraulic switch back and forth.

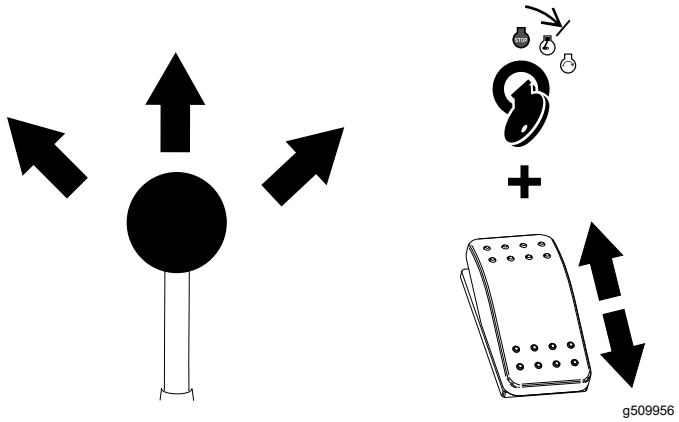


**Figure 70**

# Hydraulic Fluid Specifications

**Hydraulic-System Capacity:** 37.8 L (10 US gallons)

**Recommended hydraulic fluid:** Toro PX Extended Life Hydraulic Fluid

**Note:** A machine using the recommended replacement fluid requires less frequent fluid and filter changes.

**Alternative hydraulic fluids:** If Toro PX Extended Life Hydraulic Fluid is not available, you may use another conventional, petroleum-based hydraulic fluid having specifications that fall within the listed range for all the following material properties and that it meets industry standards. Do not use synthetic fluid. Consult with your lubricant distributor to identify a satisfactory product.

**Note:** Toro does not assume responsibility for damage caused by improper substitutions, so use products only from reputable manufacturers who will stand behind their recommendation.

### High Viscosity Index/Low Pour Point Anti-wear Hydraulic Fluid, ISO VG 46

| Material Properties: | |
|---|---|
| Viscosity, ASTM D445 | cSt @ 40°C (104°F) 44 to 48 |
| Viscosity Index ASTM D2270 | 140 or higher |
| Pour Point, ASTM D97 | -37°C to -45°C (-34°F to -49°F) |
| Industry Specifications: | Eaton Vickers 694 (I-286-S, M-2950-S/35VQ25 or M-2952-S) |

**Note:** Many hydraulic fluids are almost colorless, making it difficult to spot leaks. A red dye additive for the hydraulic fluid is available in 20 ml (0.67 fl oz) bottles. A bottle is sufficient for 15 to 22 L (4 to 6 US gallons) of hydraulic fluid. Order Part No. 44-2500 from your Authorized Service Dealer.

# Checking the Hydraulic-Fluid Level

**Service Interval:** Every 25 hours

***Important:*** **Always use the correct hydraulic fluid. Unspecified fluids will damage the hydraulic system. Refer to Hydraulic Fluid Specifications (page 50).**

1. Remove any attachments.
2. Park the machine on a level surface and engage the parking brake.
3. Shut off the engine and remove the key.
4. Raise the bracket.

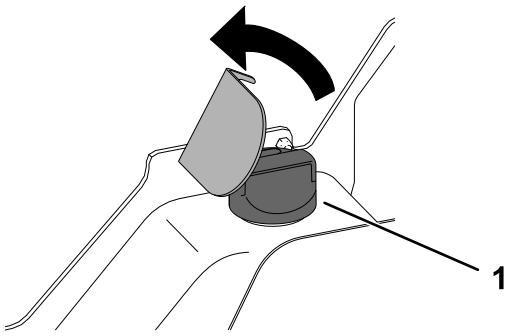


**Figure 71**

1. Filler cap

5. Clean the area around the filler cap .
6. Remove the filler-neck cap and check the fluid level on the dipstick.

   **Note:** The fluid level should be within the marks on the dipstick.

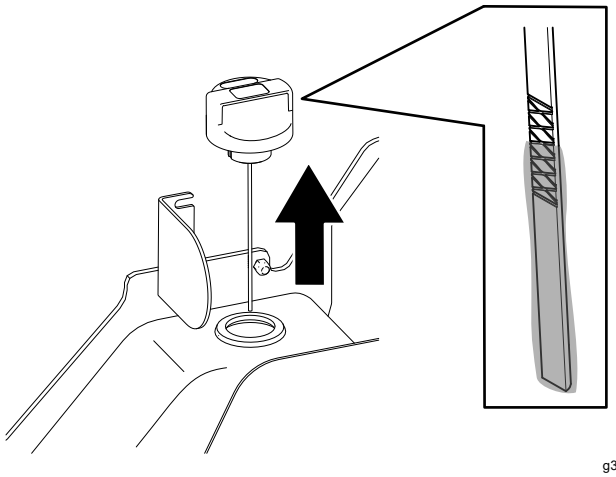


**Figure 72**

7. If the level is low, add enough fluid to raise it to the proper level.
8. Install the filler cap.
9. Lower the bracket.

# Replacing the Hydraulic Filter

**Service Interval:** After the first 8 hours

Every 250 hours

***Important:*** **Do not substitute an automotive oil filter; otherwise, severe hydraulic system damage may result.**

1. Park the machine on a level surface, engage the parking brake, and lower the loader arms.
2. Shut off the engine and remove the key.
3. Open the hood and secure the prop rod.
4. Place a drain pan under the filter and replace the filter as shown.

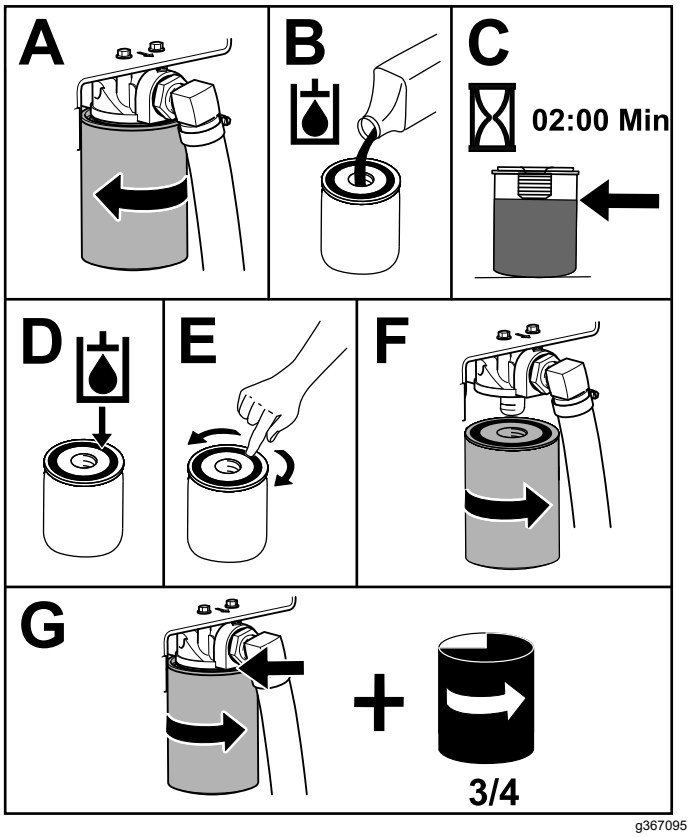


g367095

**Figure 73**

5. Clean up any spilled fluid.
6. Start the engine and let it run for about 2 minutes to purge air from the system.
7. Shut off the engine and check for leaks.
8. Check the fluid level in the hydraulic tank; refer to Hydraulic Fluid Specifications (page 50) and add fluid to raise the level to mark on dipstick.

   ***Important:*** **Do not overfill the tank.**
9. Close the hood.

# Changing the Hydraulic Fluid

**Service Interval:** Every 500 hours

1. Park the machine on a level surface, engage the parking brake, and lower the loader arms.
2. Shut off the engine and remove the key.
3. Place a large drain pain capable of holding 57 L (15 US gallons) under the drain plug on the hydraulic tank.

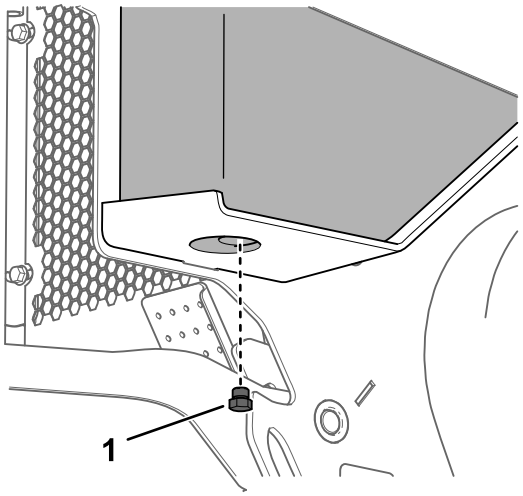


g367140

**Figure 74**

1. Drain plug

4. Remove the drain plug and allow the oil to drain into the pan.
5. When the oil is finished draining, install and tighten the drain plug.

   **Note:** Dispose of the used oil at a certified recycling center.
6. Fill the hydraulic tank with hydraulic fluid; refer to Hydraulic Fluid Specifications (page 50).
7. Start the engine and let it run for a few minutes.
8. Shut off the engine and remove the key.
9. Check the hydraulic-fluid level and add fluid to fill the tank if necessary; refer to Checking the Hydraulic-Fluid Level (page 50).

# Cleaning

## Removing Debris

**Service Interval:** Before each use or daily

***Important:*** **Operating the engine with blocked screens and/or cooling shrouds removed will result in engine damage from overheating.**

1. Park the machine on a level surface and lower the loader arms.
2. Shut off the engine, remove the key, and allow the engine to cool.
3. Open the hood and secure the prop rod.
4. Wipe away debris from the air cleaner.
5. Clean any debris buildup on the engine and in the oil cooler fins with a brush or blower.

   ***Important:*** **Operating the engine with blocked screens and/or cooling shrouds removed will result in engine damage due to overheating.**
6. Clean debris from the hood opening, muffler, heat shields, and radiator screen (if applicable).
7. Close the hood.

## Washing the Machine

When pressure washing the machine, do the following:

- Wear appropriate personal protective equipment for the pressure washer.
- Keep all guards in place on the machine.
- Avoid spraying at electronic components.
- Avoid spraying at edges of decals.
- Spray the exterior of the machine only. Do not spray directly into openings in the machine.
- Spray only the dirty parts of the machine.
- Use a 40-degree or larger spray nozzle. 40-degree nozzles are usually white.
- Keep the tip of the pressure washer at least 61 cm (2 ft) away from the surface being washed.
- Use only pressure washers with pressure below 13790 kpa (2000 psi) and flow below 7.6 L (2 US gallons) per minute.
- Replace damaged or peeling decals.
- Grease all grease points after washing; refer to Greasing the Machine (page 32).

## Cleaning the Chassis

**Service Interval:** Every 100 hours—Check for dirt buildup in the chassis.

Over time, the chassis under the engine collects dirt and debris that must be removed. Open the hood, secure the prop rod, and use a flashlight to inspect the area under the engine regularly. When the debris is 2.5 to 5 cm (1 to 2 inches) deep, clean the chassis.

1. Park the machine on a level surface, engage the parking brake, and lower the loader arms.
2. Raise the front of the machine so that the machine is angled backward.
3. Shut off the engine and remove the key.
4. Remove the 2 bolts securing the bottom plate and remove the bottom plate.

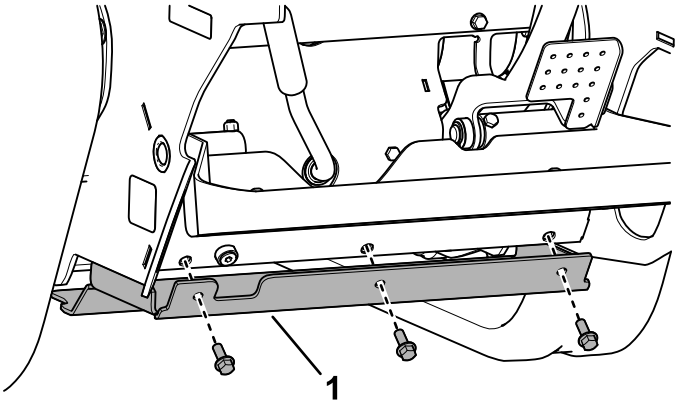


**Figure 75**

1. Bottom plate

5. Remove the front cover; refer to Removing the Front Cover (page 31).
6. Spray water into the chassis to clean out the dirt and debris.

   **Note:** The water will drain at the back of the machine.

   ***Important:*** **Do not spray water into the engine.**
7. Grease the machine; refer to Greasing the Machine (page 32).
8. Install the bottom plate.
9. Install the front screen.
10. Lower the machine.

# Storage

## Storage Safety

- Shut off the engine, remove the key, wait for all moving parts to stop, and allow the machine to cool before storing it.
- Do not store the machine or fuel near flames.

## Storage

1. Park the machine on a level surface, engage the parking brake, and lower the loader arms.
2. Shut off the engine and remove the key.
3. Remove dirt and grime from the entire machine.

   ***Important:*** **You can wash the machine with mild detergent and water. Do not pressure-wash the machine. Avoid excessive use of water, especially near the control panel, engine, hydraulic pumps, and motors.**
4. Service the air cleaner; refer to Servicing the Air-Cleaner (page 32).
5. Grease the machine; refer to Greasing the Machine (page 32).
6. Change the engine oil; refer to Changing the Engine Oil and Filter (page 35).
7. Charge the battery; refer to Charging the Battery (page 39).
8. Check and adjust the track tension; refer to Checking and Adjusting the Track Tension (page 43).
9. Check and tighten all fasteners. Repair or replace any worn, damaged, or missing parts.
10. Paint all scratched or bare metal surfaces with paint available from your Authorized Service Dealer.
11. Store the machine in a clean, dry garage or storage area. Remove the key from the ignition switch and keep it in a memorable place.
12. Disconnect the battery; refer to Using the Battery-Disconnect Switch (page 38).
13. Cover the machine to protect it and keep it clean.

# Troubleshooting

| Problem | Possible Cause | Corrective Action |
|---|---|---|
| The starter does not crank. | 1. The electrical connections are corroded or loose.<br>2. A fuse is blown or loose.<br>3. The battery is discharged.<br>4. The relay or switch is damaged.<br>5. A starter or starter solenoid is damaged.<br>6. Internal engine components have seized.<br>7. The safety interlock is engaged. | 1. Check the electrical connections for good contact.<br>2. Correct or replace the fuse.<br>3. Charge the battery or replace it.<br>4. Contact your Authorized Service Dealer.<br>5. Contact your Authorized Service Dealer.<br>6. Contact your Authorized Service Dealer.<br>7. Check the neutral setting on the traction and auxiliary controls. |
| The engine cranks but does not start. | 1. The starting procedure is incorrect.<br>2. The fuel tank is empty.<br>3. The fuel-shutoff valve is closed.<br>4. Dirt, water, stale fuel, or incorrect fuel is in the fuel system.<br>5. The fuel line is clogged.<br>6. There is air in the fuel.<br>7. The glow plugs are inoperative.<br>8. The cranking speed is slow.<br>9. The air-cleaner filters are dirty.<br>10. The fuel filter is clogged.<br>11. The improper fuel grade for cold weather is in the machine.<br>12. There is low compression.<br>13. The injection nozzles are damaged.<br>14. The injection pump timing is incorrect.<br>15. The injection pump is damaged.<br>16. The ETR solenoid is damaged. | 1. Refer to Starting the Engine.<br>2. Fill the tank with fresh fuel.<br>3. Open the fuel-shutoff valve.<br>4. Drain and flush the fuel system; add fresh fuel.<br>5. Clean or replace the fuel line.<br>6. Bleed the nozzles and check for air leaks at the fuel hose connections and fittings between the fuel tank and engine.<br>7. Check the fuse, glow plugs, and wiring.<br>8. Check the battery, oil viscosity, and starting motor (contact your Authorized Service Dealer).<br>9. Service the air filters.<br>10. Replace the fuel filter.<br>11. Drain the fuel system and replace the fuel filter. Add fresh fuel of proper grade for ambient temperature conditions. You may need to warm the entire traction unit.<br>12. Contact your Authorized Service Dealer.<br>13. Contact your Authorized Service Dealer.<br>14. Contact your Authorized Service Dealer.<br>15. Contact your Authorized Service Dealer.<br>16. Contact your Authorized Service Dealer. |

| Problem | Possible Cause | Corrective Action |
|---|---|---|
| The engine starts but does not keep running. | 1. The fuel-tank vent is restricted. | 1. Loosen the cap. If the engine runs with the cap loosened, replace the cap. |
| | 2. Dirt or water is in the fuel system. | 2. Drain and flush the fuel system; add fresh fuel. |
| | 3. The fuel filter is clogged. | 3. Replace the fuel filter. |
| | 4. There is air in the fuel. | 4. Bleed the nozzles and check for air leaks at fuel hose connections and fittings between the fuel tank and engine. |
| | 5. Improper fuel grade for cold weather was used in the machine. | 5. Drain the fuel system and replace the fuel filter. Add fresh fuel of proper grade for ambient temperature conditions. |
| | 6. The spark-arrestor screen is clogged. | 6. Clean or replace the spark-arrestor screen. |
| | 7. The fuel pump is damaged. | 7. Contact your Authorized Service Dealer. |
| The engine runs but knocks or misses. | 1. Dirt, water, stale fuel, or incorrect fuel is in the fuel system. | 1. Drain and flush the fuel system; add fresh fuel. |
| | 2. The engine is overheating. | 2. Refer to “The engine overheats.” |
| | 3. There is air in the fuel. | 3. Bleed the nozzles and check for air leaks at the fuel hose connections and fittings between the fuel tank and engine. |
| | 4. The injection nozzles are damaged. | 4. Contact your Authorized Service Dealer. |
| | 5. There is low compression | 5. Contact your Authorized Service Dealer. |
| | 6. The injection-pump timing is incorrect. | 6. Contact your Authorized Service Dealer. |
| | 7. There is excessive carbon buildup. | 7. Contact your Authorized Service Dealer. |
| | 8. There is internal wear or damage. | 8. Contact your Authorized Service Dealer. |
| The engine does not idle. | 1. The fuel-tank vent is restricted. | 1. Loosen the cap. If the engine runs with the cap loosened, replace the cap. |
| | 2. Dirt, water, stale fuel, or incorrect fuel is in the fuel system. | 2. Drain and flush the fuel system; add fresh fuel. |
| | 3. The air-cleaner filters are dirty. | 3. Service the air filters. |
| | 4. The fuel filter is clogged. | 4. Replace the fuel filter. |
| | 5. There is air in the fuel. | 5. Bleed the nozzles and check for air leaks at fuel hose connections and fittings between the fuel tank and engine. |
| | 6. The fuel pump is damaged. | 6. Contact your Authorized Service Dealer. |
| | 7. There is low compression | 7. Contact your Authorized Service Dealer. |

| Problem | Possible Cause | Corrective Action |
|---|---|---|
| The engine overheats. | 1. More coolant is needed. | 1. Check and add coolant. |
| | 2. There is restricted air flow to the radiator. | 2. Inspect and clean the radiator screen with every use. |
| | 3. The crankcase-oil level is incorrect. | 3. Fill or drain to the Full mark. |
| | 4. The engine load is excessive. | 4. Reduce the load; use a lower ground speed. |
| | 5. Incorrect fuel is in the fuel system. | 5. Drain and flush the fuel system; add fresh fuel. |
| | 6. The thermostat is damaged. | 6. Contact your Authorized Service Dealer. |
| | 7. The fan belt is loose or broken. | 7. Contact your Authorized Service Dealer. |
| | 8. Injection timing is incorrect. | 8. Contact your Authorized Service Dealer. |
| | 9. The coolant pump is damaged. | 9. Contact your Authorized Service Dealer. |
| | 10. The engine rpm is too low. | 10. Check the high idle speed. |
| The engine loses power. | 1. The engine load is excessive. | 1. Reduce the load; use a lower ground speed. |
| | 2. The crankcase-oil level is incorrect. | 2. Fill or drain to the Full mark. |
| | 3. The air-cleaner filters are dirty. | 3. Service the air filters. |
| | 4. Dirt, water, stale fuel, or incorrect fuel is in the fuel system. | 4. Drain and flush the fuel system; add fresh fuel. |
| | 5. The engine is overheating. | 5. Refer to “The engine overheats.” |
| | 6. The spark-arrestor screen is clogged. | 6. Clean or replace the spark-arrestor screen. |
| | 7. There is air in the fuel. | 7. Bleed the nozzles and check for air leaks at fuel hose connections and fittings between the fuel tank and engine. |
| | 8. There is low compression | 8. Contact your Authorized Service Dealer. |
| | 9. The fuel-tank vent is restricted. | 9. Contact your Authorized Service Dealer. |
| | 10. The injection-pump timing is incorrect. | 10. Contact your Authorized Service Dealer. |
| | 11. The injection pump is damaged. | 11. Contact your Authorized Service Dealer. |
| | 12. The engine high idle speed is too low. | 12. Contact your Authorized Service Dealer. |
| Exhaust produces excessive black smoke. | 1. The engine load is excessive. | 1. Reduce the load; use a lower ground speed. |
| | 2. The air-cleaner filters are dirty. | 2. Service the air filters. |
| | 3. Incorrect fuel is in the fuel system. | 3. Drain and flush the fuel system; add fresh fuel. |
| | 4. The injection-pump timing is incorrect. | 4. Contact your Authorized Service Dealer. |
| | 5. The injection pump is damaged. | 5. Contact your Authorized Service Dealer. |
| | 6. The injection nozzles are damaged. | 6. Contact your Authorized Service Dealer. |

| Problem | Possible Cause | Corrective Action |
|---|---|---|
| Exhaust produces excessive white smoke. | 1. The key was turned to the START position before the glow-plug light turned off. | 1. Turn the key to the RUN position and allow the glow-plug light to turn off before starting the engine. |
| | 2. The engine temperature is low. | 2. Check the thermostat. |
| | 3. The glow plugs are inoperative. | 3. Check the fuse, glow plugs, and wiring. |
| | 4. The injection-pump timing is incorrect. | 4. Contact your Authorized Service Dealer. |
| | 5. The injection nozzles are damaged. | 5. Contact your Authorized Service Dealer. |
| | 6. There is low compression. | 6. Contact your Authorized Service Dealer. |
| The machine does not drive. | 1. The traction-control hydraulics are disabled. | 1. Toggle the traction-enable switch. |
| | 2. The parking brake is engaged. | 2. Disengage the parking brake. |
| | 3. The hydraulic-fluid level is low. | 3. Add hydraulic fluid to the reservoir. |
| | 4. The hydraulic system is damaged. | 4. Contact your Authorized Service Dealer. |
| | 5. The tow valves are open. | 5. Close the tow valves. |
| | 6. The flow-divider valve lever is in 9 o'clock position. | 6. Move the lever to the 12 o'clock to 10 o'clock position. |
| | 7. A traction pump drive coupler is loose or broken. | 7. Contact your Authorized Service Dealer. |
| | 8. Pump and/or wheel motor is damaged. | 8. Contact your Authorized Service Dealer. |
| | 9. The control valve is damaged. | 9. Contact your Authorized Service Dealer. |
| | 10. The relief valve is damaged. | 10. Contact your Authorized Service Dealer. |

# Notes:

# California Proposition 65 Warning Information

## What is this warning?

You may see a product for sale that has a warning label like the following:



**WARNING:** Cancer and Reproductive Harm—www.p65Warnings.ca.gov.

## What is Prop 65?

Prop 65 applies to any company operating in California, selling products in California, or manufacturing products that may be sold in or brought into California. It mandates that the Governor of California maintain and publish a list of chemicals known to cause cancer, birth defects, and/or other reproductive harm. The list, which is updated annually, includes hundreds of chemicals found in many everyday items. The purpose of Prop 65 is to inform the public about exposure to these chemicals.

Prop 65 does not ban the sale of products containing these chemicals but instead requires warnings on any product, product packaging, or literature with the product. Moreover, a Prop 65 warning does not mean that a product is in violation of any product safety standards or requirements. In fact, the California government has clarified that a Prop 65 warning "is not the same as a regulatory decision that a product is 'safe' or 'unsafe.'" Many of these chemicals have been used in everyday products for years without documented harm. For more information, go to https://oag.ca.gov/prop65/faqs-view-all.

A Prop 65 warning means that a company has either (1) evaluated the exposure and has concluded that it exceeds the "no significant risk level"; or (2) has chosen to provide a warning based on its understanding about the presence of a listed chemical without attempting to evaluate the exposure.

## Does this law apply everywhere?

Prop 65 warnings are required under California law only. These warnings are seen throughout California in a wide range of settings, including but not limited to restaurants, grocery stores, hotels, schools, and hospitals, and on a wide variety of products. Additionally, some online and mail order retailers provide Prop 65 warnings on their websites or in catalogs.

## How do the California warnings compare to federal limits?

Prop 65 standards are often more stringent than federal and international standards. There are various substances that require a Prop 65 warning at levels that are far lower than federal action limits. For example, the Prop 65 standard for warnings for lead is 0.5 µg/day, which is well below the federal and international standards.

## Why don't all similar products carry the warning?

- Products sold in California require Prop 65 labelling while similar products sold elsewhere do not.
- A company involved in a Prop 65 lawsuit reaching a settlement may be required to use Prop 65 warnings for its products, but other companies making similar products may have no such requirement.
- The enforcement of Prop 65 is inconsistent.
- Companies may elect not to provide warnings because they conclude that they are not required to do so under Prop 65; a lack of warnings for a product does not mean that the product is free of listed chemicals at similar levels.

## Why does Toro include this warning?

Toro has chosen to provide consumers with as much information as possible so that they can make informed decisions about the products they buy and use. Toro provides warnings in certain cases based on its knowledge of the presence of one or more listed chemicals without evaluating the level of exposure, as not all the listed chemicals provide exposure limit requirements. While the exposure from Toro products may be negligible or well within the "no significant risk" range, out of an abundance of caution, Toro has elected to provide the Prop 65 warnings. Moreover, if Toro does not provide these warnings, it could be sued by the State of California or by private parties seeking to enforce Prop 65 and subject to substantial penalties.




**Count on it.**