FORM NO. 3312-159

TORO®

MODEL NO. 16771-3000001 & UP

PARTS CATALOG

21″ S.P. SIDE DISCHARGE

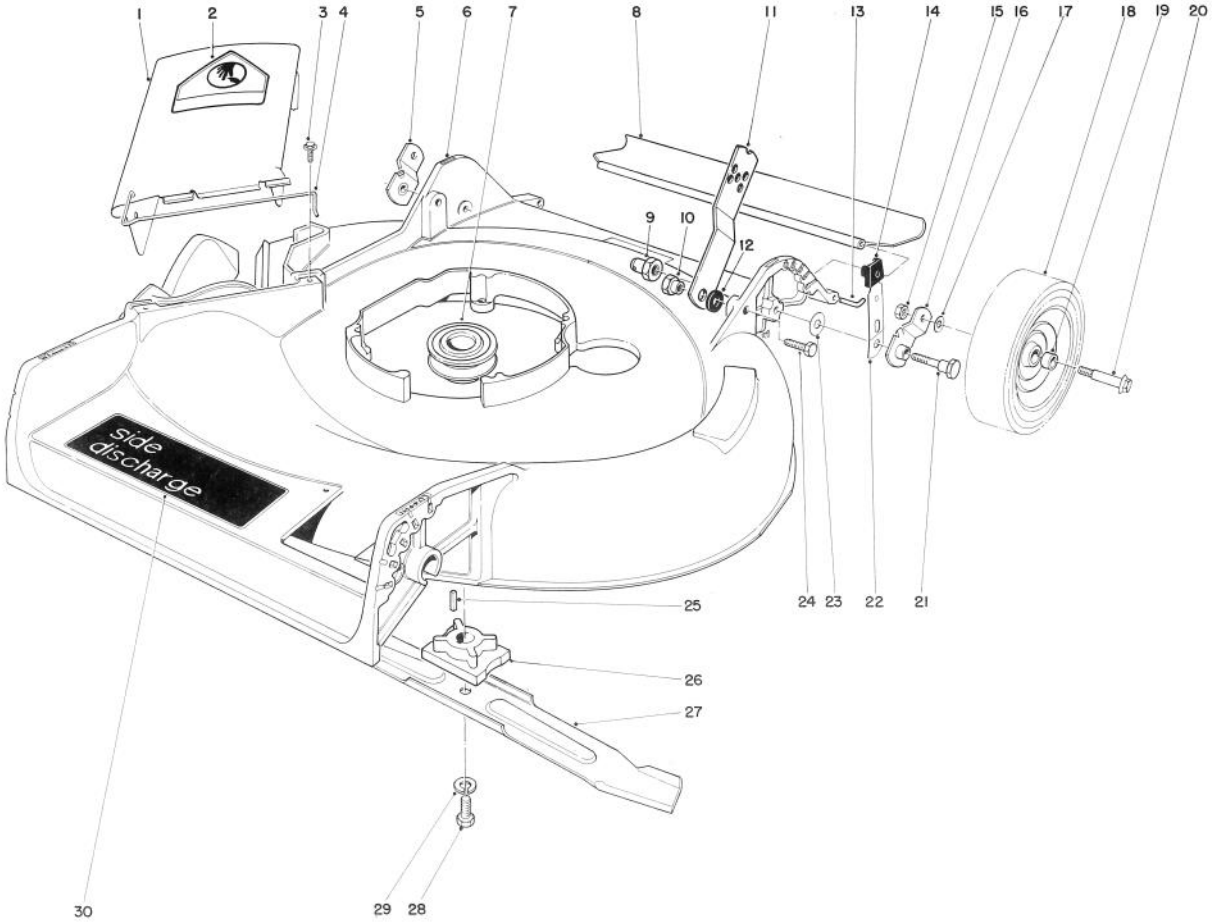

HOUSING ASSEMBLY

Ref. No.	Part No.	Description	No. Used
1	27-7817	Deflector (Incl. Ref. #2 & 4)	1
2	39-5770	Decal — Danger	1
3	46-6810	Screw & Washer Assembly	2
4	20-2640	Hinge — Spring	1
5	20-2130	Pivot Arm Assembly "B"	1
6	11-4639	Housing	1
7	23-0130	Pulley — Driver	1
8	22-4950	Shield — Rear	1
9	12-2080	Nut — Shoulder	2
10	27-6520	Nut — Shoulder	2
11	27-7070	Latch — Handle	2
12	3-3287	Spacer — Handle Latch	2
13	33-3201	Rod — Rear Shield	1
14	25-7740	Knob — Spring Arm	2
15	32146-6	Nut — Lock	2
16	20-2140	Pivot Arm Assembly "A"	1
17	40-1940	Washer — Wheel Bolt	2
18	27-6200	Wheel & Tire Assembly (Incl. Ref. #19)	2
19	27-6250	Bushing	4
20	27-6230	Bolt — Wheel	2
21	3-0655	Screw — Pivot	2
22	25-8000	Spring Arm	2
23	5-4460	Washer — Pivot	2
24	322-6	Screw — Cap Hex Hd.	2
25	5-7310	Key Square	1
26	46-4870	Retainer — Blade	1
27	20-2720	Blade 21"	1
28	26-0671	Screw — Blade Hex Hd.	1
29	3253-22	Washer — Lock	1
30	44-0440	Decal — Side Discharge	1

COPYRIGHT © ALL RIGHTS RESERVED

The Toro Company — 1983
MINNEAPOLIS, MN 55420 — U.S.A.

PRICE $1.00

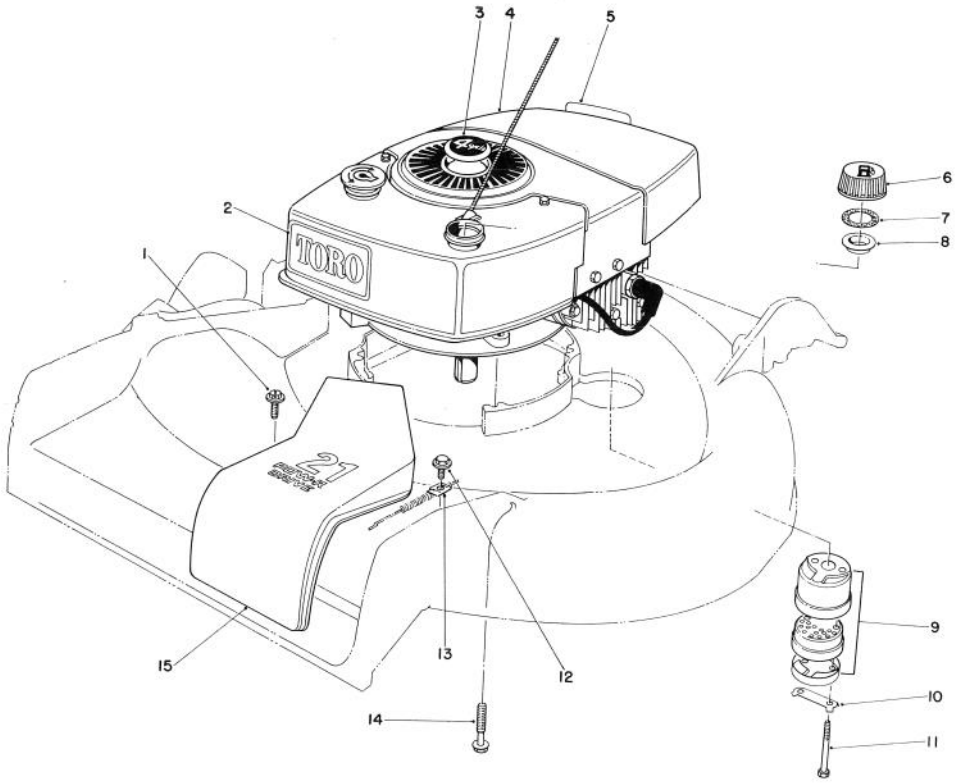

ENGINE ASSEMBLY

Ref. No.	Part No.	Description	No. Used
1	12-5450	Screw — Thread Forming	2
2	44-0510	Decal — Toro	1
3	38-1480	Button Plug	1
4	221-731	Engine	1
5	37-1580	Decal — Maintenance	1
6	27-7872	Gas Cap Assembly (Incl. Ref. #7 & 8)	1
7	2210-144	Gasket — Gas Cap	1
8	2210-143	Baffle — Gas Cap	1

Ref. No.	Part No.	Description	No. Used
9	5-4769	Muffler Assembly (Incl. #10 & 11)	1
10	3-5094	Clip — Locking	1
11	321-23	Screw — Cap Hex Hd.	2
12	32144-11	Screw — Thread Forming Hex Washer Hd.	1
13	46-5610	Clamp — Cable	1
14	11-0580	Screw — Engine Hex Hd.	3
15	46-4780	Cover — Belt	1
*	11-3459	Loose Parts	1

*Not Illustrated

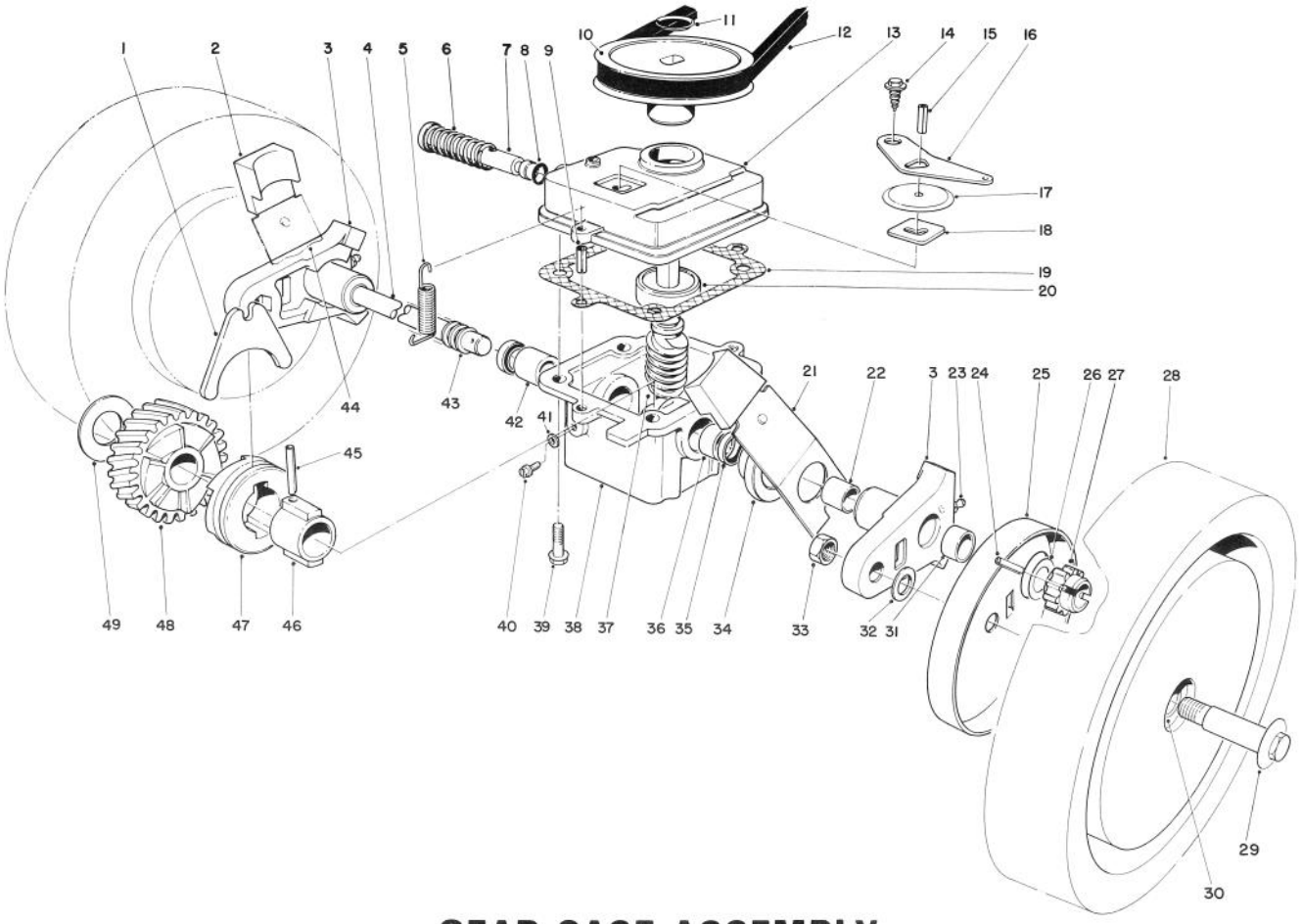

GEAR CASE ASSEMBLY

Ref. No.	Part No.	Description	No. Used
1	5-3247	Shifter Fork	1
2	25-7740	Knob Arm	2
3	38-2220	Pivot Arm (Incl. Ref. #22,23&31)	2
4	37-9440	Drive Shaft	1
5	17-4490	Spring — Belt Tension	1
6	3-0731	Spring	1
7	46-8240	Shifter Rod	1
8	237-137	"O" — Ring	1
9	32121-1	Roll Pin	2
10	18-9760	Pulley	1
11	3290-346	Push On Retainer	1
12	5-4505	V-Belt	1
13	39-1100	Gear Case Cover	1
14	32140-64	Screw — Self Tapping	1
15	32121-23	Roll Pin	1
16	5-3252	Shifter Arm	1
17	3-2615	Transmission Dust Cover	1
18	3-0681	Latch Plate	1
19	36-1000	Gasket — Gear Case	1
20	251-284	Ball Bearing	1
21	25-7930	Spring Arm Assembly L.H.	1
22	256-206	Bushing	2
23	302-56	Grease Fitting	2
24	32121-98	Pin — Coil	2
25	18-9820	Wheel Cover	2
26	46-6510	Thrust Washer	4
27	46-5930	Pinion Gear	2

Ref. No.	Part No.	Description	No. Used
28	11-1419	Wheel & Tire Assembly (Incl. Ref. #30)	2
29	27-6230	Wheel Bolt	2
30	27-6250	Bushing — Wheel	4
31	256-1	Bushing	2
32	40-1940	Washer — Wheel Bolt	2
33	32146-6	Nut	2
34	3-2646	End Cap	2
35	253-140	Oil Seal	2
36	256-110	Bushing	1
37	8-5679	Worm Shaft & Gear (Incl. Ref. #48)	1
38	8-0479	Gear Case (Incl. Ref. # 35-36 & 42)	1
39	11-9760	Screw	4
40	28-1550	Screw Nylon	1
41	46-9640	Gasket	1
42	256-263	Bushing	1
43	24-7920	Cover Drive Shaft	1
44	25-7920	Spring Arm Assembly R.H.	1
45	32121-88	Coil Pin	1
46	3-0721	Sleeve	1
47	19-5660	Clutch Jaw	1
48		Helical Gear	1
49	3-0724	Thrust Washer	1
*	11-4149	Gear Case Assembly Complete	1

*Not Illustrated

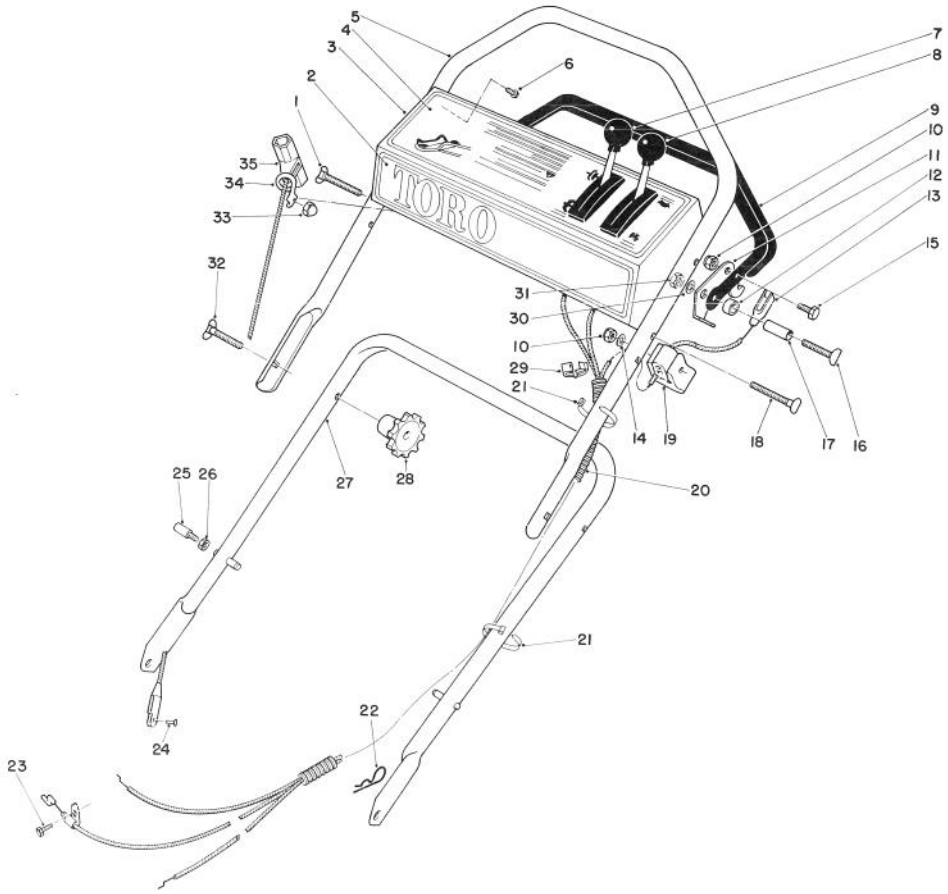

HANDLE ASSEMBLY

Ref. No.	Part No.	Description	No. Used
1	46-6433	Screw — Handle	1
2	46-7380	Decal — Toro	1
3	11-4699	Panel — Control (Incl. Ref. #4)	1
4	46-7390	Decal — Instruction	1
5	46-5410	Handle — Upper	1
6	32104-76	Screw — Self Tapping Acorn Hd.	3
7	46-6040	Control — Traction (Bend Type #1) (Sheath Lg. 53") (Wire Lg. 2½")	1
8	46-6010	Control — Throttle (Bend Type #1) (Sheath Lg. 36-1/2") (Wire Lg. 2-1/16")	1
9	46-5560	Control Bar Assembly	1
10	3296-42	Nut — Lock	2
11	46-7950	Lever — Control	1
12	46-6240	Spacer — Nylon	1
13	46-8010	Cable — Brake	1
14	3256-22	Washer — Plain	1
15	321-5	Screw — Cap Hex. Hd.	1

Ref. No.	Part No	Description	No. Used
16	17-9421	Screw — Handle	2
17	46-5580	Bushing	2
18	46-6432	Screw — Handle	1
19	46-6980	Support — Cable	1
20	46-6441	Cover — Control Cable	1
21	3290-378	Cable Tie	2
22	3290-255	Pin — Cotter Hair	2
23	2210-250	Screw Hex. Cross Hd.	1
24	2210-251	Rivet — Tubular	1
25†	17-9380	Handle Pin	2
26†	32146-8	Locknut	2
27	49-0120	Lower — Handle	1
28	19-4050	Knob — Handle	2
29	2412-50	Clip — Convoluted Tubing	2
30	3256-22	Washer — Plain	2
31	3296-47	Nut — Lock	2
32	17-9421	Screw — Handle	2
33	32111-7	Nut — Acorn	1
34	46-8080	Guide — Rope	1
35‡		Rope — Starter	1

†Service Replacement Parts

‡Obtain from your local Tecumseh dealer

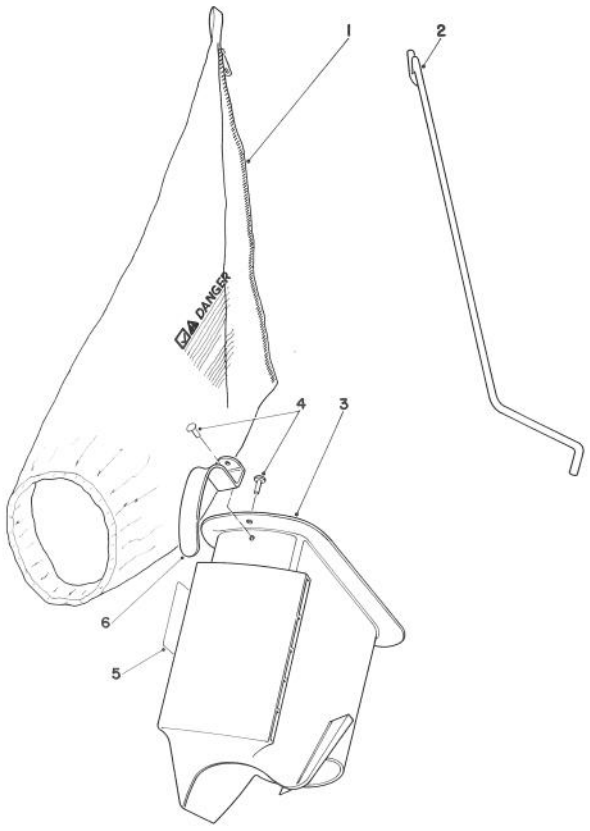

BAGGING KIT NO. 47-6510 (OPTIONAL)

Ref. No.	Part No.	Description	No. Used
1	6-0929	Grass Bag	1
2	47-5830	Bag Rod	1
3	6-1089	Grass Chute (Incl. Ref. #4&6)	1

Ref. No.	Part No.	Description	No. Used
4	3295-26	Rivet	2
5	36-5230	Decal — Bag Chute	1
6	20-4650	Handle Chute	1

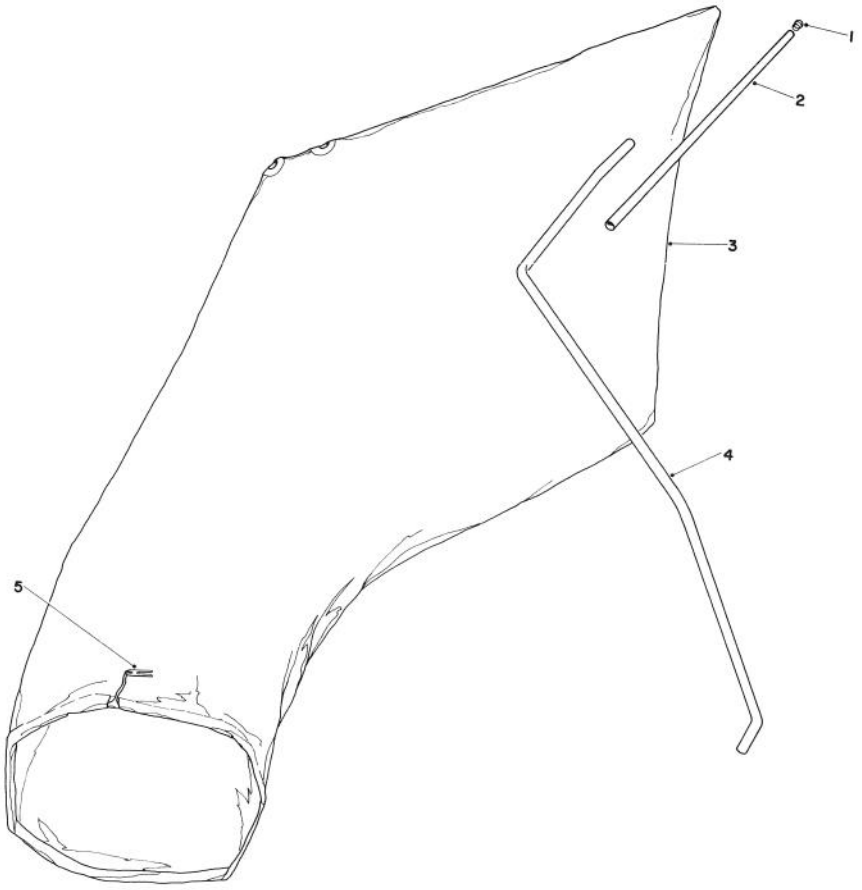

GIANT BAGGING KIT NO. 29-9750 (OPTIONAL)

Ref. No.	Part No.	Description	No. Used
1	2410-29	Cap	1
2	29-7000	Tube 25"	1
3	8-4719	Bag (incl. Ref. #5)	1

Ref. No.	Part No.	Description	No. Used
4	22-4820	Hanger Rod	1
5	3-2781	Bag Cord Fasteners	1

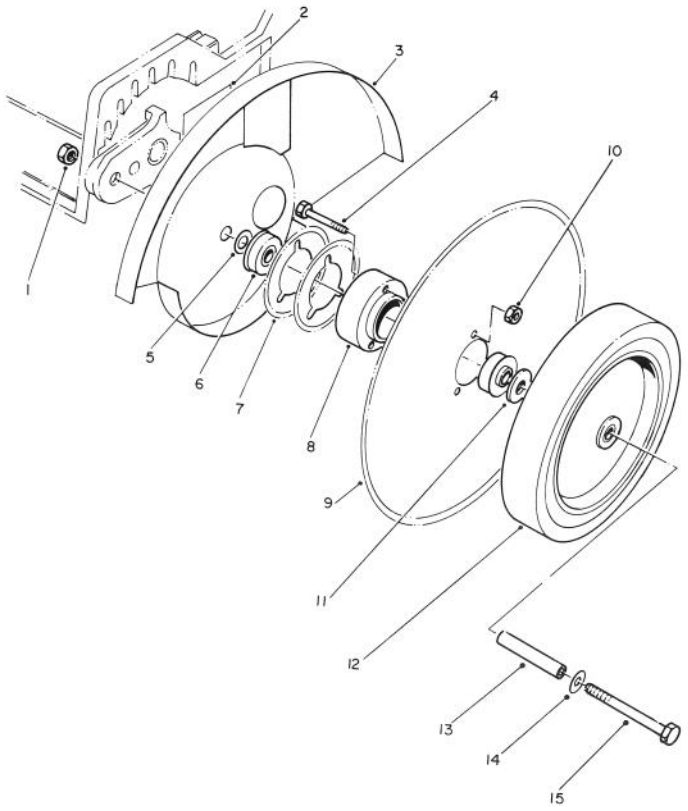

EDGER KIT NO. 57125 (Optional)

Ref. No.	Part No.	Description	No. Used
1	32146-6	Locknut	1
2	47-2210	Decal — Toro Edger	1
3	47-6150	Shield	1
4	3290-360	Hex Hd. Machine Screw	3
5	40-1940	Washer — Wheel Bolt	1
6	251-180	Bearing	2
7	47-6280	Gear — Wheel	2
8	47-6190	Spacer — Hub	1

Ref. No.	Part No.	Description	No. Used
9	47-6200	Blade — Edger 80 Tooth	1
10	32153-1	Locknut	3
11	29-8870	Spacer	1
12	34-0380	Wheel Assembly	1
13	47-6210	Spacer — Wheel Bolt	1
14	3256-3	Washer	1
15	3211-17	Capscrew	1

ENGINE TECUMSEH MODEL TNT100-10085E

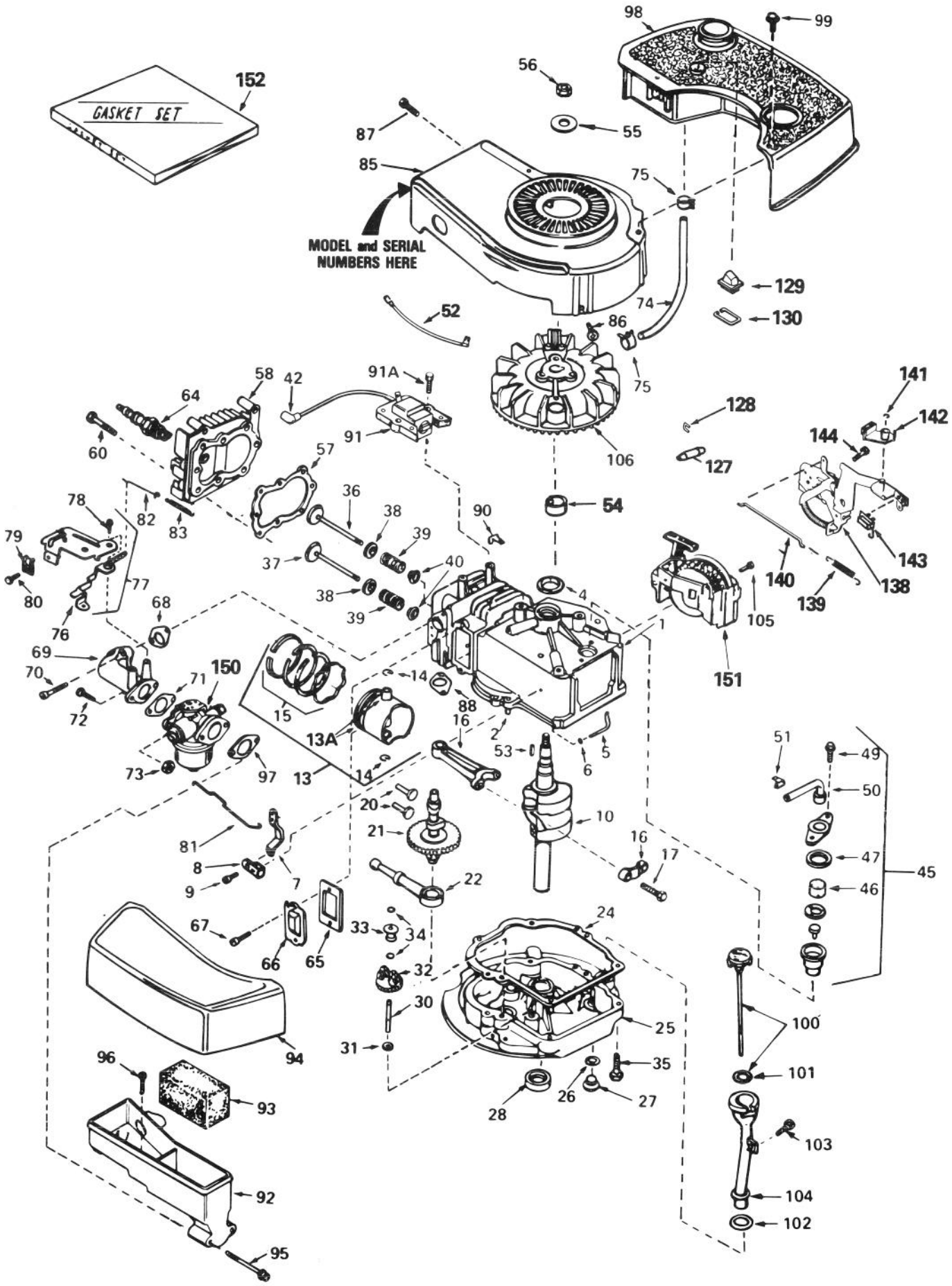

ENGINE TECUMSEH MODEL TNT100-10085E

Ref. No.	Part No.	Description	No. Used
1	34429A	Cylinder Assy. (Inc. #2&4)	1
2	26727	Pin, Dowel	2
4	32600	Seal, Oil	1
5	30589	Rod, Governor (Incl. #6)	1
6	28277	Washer, Flat	1
7	32651	Lever, Governor	1
8	31335	Clamp, Governor Lever	1
9	650548	Screw, Hex Washer Hd.	1
10	34440	Crankshaft	1
13	34851	Piston, Pin & Ring Assy. (Std.) (Incl. #13A, 14 & 15)	1
13	34852	Piston, Pin & Ring Assy. (.010 oversize) (Incl. #13A, 14 & 15)	1
13	34853	Piston, Pin & Ring Assy. (.020 oversize) (Incl. #13A, 14 & 15)	1
13A	32603B	Piston & Pin Assy. (Std.) (Inc. #14)	1
13A	32604B	Piston & Pin Assy. (.010 oversize) (Incl. #14)	1
13A	32605B	Piston & Pin Assy. (.020 oversize) (Inc. #14)	1
14	20381	Ring, Piston Pin Retaining	2
15	34854	Ring Set, Piston (Std.)	1
15	34855	Ring Set, Piston (.010 oversize)	1
15	34856	Ring Set, Piston (.020 oversize)	1
16	30963B	Rod Assy., Connecting (Incl. #17)	1
17	32610A	Bolt, Connecting Rod	2
20	27241	Lifter, Valve	2
21	33553	Camshaft (Mech. Compression Release)	1
22	29914	Pump Assy., Oil	1
24	*26750A	Gasket, Mounting Flange	1
25	30594B	Flange Assy., Mounting (Incl. #26 thru 30)	1
26	*28833	Gasket, Oil Drain Plug	1
27	27244	Plug, Oil Drain	1
28	26208	Seal, Oil	1
30	30574	Shaft, Mechanical Governor	1
31	30590A	Washer, Flat	1
32	30591	Gear Assy., Governor (Incl. #31)	1
33	30588A	Spool, Governor	1
34	29193	Ring, Retaining	2
35	650488	Screw, Hex Hd.	6
36	29314B	Valve, Intake (Std.) (Incl. #40)	1
36	29315C	Valve, Intake (1/32" oversize) (Incl. #40)	1
37	29313C	Valve, Exhaust (Std.) (Incl. #40)	1
37	29315C	Valve, Exhaust (1/32" oversize (Incl. #40)	1
38	31671	Cap, Upper Valve Spring	2
39	31672	Spring, Valve	2
40	31673	Cap, Lower Valve Spring	2
42	610118	Cover, Spark Plug	1
45	34214A	Breather Assy. (Incl. #46 thru 51)	1
46	33734	Element, Breather	1
47	*33735	Gasket, Breather	1
49	30200	Screw, Hex Washer Hd. Self-tap	2
50	33886	Tube, Breather	1
51	33887	Clip, Breather Tube	1
52	34961	Wire, Ground	1
53	611004	Key, Flywheel (Solid State)	1
54	34080	Spacer, Flywheel Key	1
55	650815	Washer, Belleville	1
56	650816	Nut, Flywheel	1

Ref. No.	Part No.	Description	No. Used
57	*33015	Gasket, Cylinder Head	1
58	34342	Head, Cylinder	1
60	6021A	Screw, Hex Flange Hd.	8
64	33636	Plug, Spark (Champion J-8 or equivalent) *Except for Canada*	1
64	34251 Canada	Resistor Spark Plug (Canadian Regulations require RJ-17LM resistor spark plug)	1
65	*27234	Gasket, Valve Spring Cover	1
66	32755	Cover, Valve Spring Box	1
67	650128	Screw, Fil. Hd.	2
68	*34690	Gasket, Intake Pipe	1
69	33004A	Pipe, Intake (Incl. #68)	1
70	650451	Screw, Hex Hd.	2
71	*31688	Gasket, Carburetor	1
72	6201	Screw, Hex Hd.	2
73	29752	Nut & Lockwasher Assy.	2
74	34682	Line, Fuel	1
75	26460	Clamp, Fuel Line	2
76	34310	Lever, Control	1
77	33889A	Control Assy., Speed (Incl. #76&78)	1
78	650804	Screw, Hex Washer Hd. Shoulder Self-tap	1
79	27793	Clip, Conduit	1
80	28942	Screw, Hex Washer Hd.	1
81	34336	Link, Governor-to-throttle	1
82	33151	Link, Governor Spring	1
83	33890	Spring, Governor	1
85	33891B	Housing, Blower	1
86	650561	Screw, Hex Washer Hd. Durlok	2
87	30200	Screw, Hex Washer Hd. Self-tap	2
88	*30081	Gasket, Exhaust	1
90	29443	Clip, Fuel Line	2
91	34443A	Lamination & Coil Assy. (Solid State) (Incl. #42)	1
91A	650814	Screw, Hex Hd.	2
92	33895	Body, Air Cleaner	1
93	33896	Filter, Air Cleaner	1
94	33897	Cover, Air Cleaner	1
95	650762	Screw, Fil. Hd.	2
96	650784	Screw, Hex Hd. Taptite w/flatwasher	1
97	*33051	Gasket, Air Cleaner	1
98	35028	Tank, Fuel	1
99	28763	Screw, Hex Washer Hd.	2
100	33894A	Dipstick, Oil (Incl. #101)	1
101	33590	"O" Ring	1
102	34265	Gasket, Fill Tube	1
103	650562	Screw, Hex Washer Hd.	1
104	34380	Tube, Oil Fill	1
105	650802	Screw, Hex Washer Hd. Taptite	2
106	611046	Flywheel	1
127	35026	Coupling, Starter Rope	1
128	35025	Staple, Rope Retainer (Strip of 25 Pieces)	1
129	34983	Pulley Assy., Starter	1
130	34984	Retainer, Pulley	1
138	35015	Bracket Assy.	1
139	34965	Spring, Extension	1
140	34966	Link, Control	1
141	32309	Ring, Retaining	1
142	34968	Lever, Brake	1
143	610973	Terminal Assy.	1
144	650837	Screw, Hex Hd. E.T.	1
150	632050A	Carburetor (Incl. #71)	1
151	590532	Starter, Sidemount rewind	1
152	33906A	Gasket Set (Incl. Items Marked*)	1

*Indicates parts included in Gasket Set, Ref. No. 152.

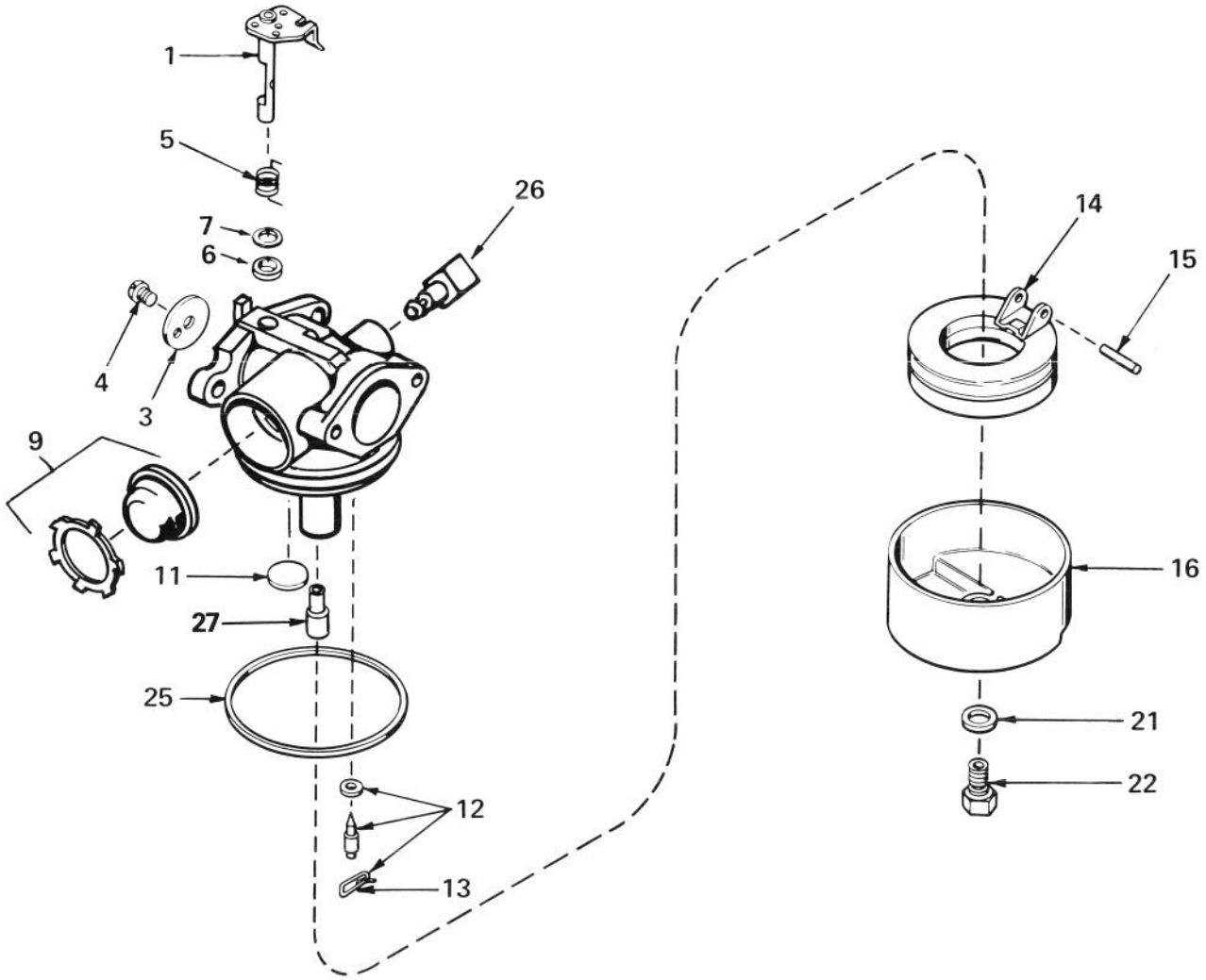

CARBURETOR ASSEMBLY NO. 632050A

Ref. No.	Part No.	Description	No. Used
1	631615	Shaft & Lever Assy., Throttle	1
3	631616	Shutter, Throttle	1
4	650506	Screw, Throttle Shutter	1
5	631767	Spring, Return	1
6	631971	Seal, Dust	1
7	631184	Washer, Flat	1
9	632047	Bulb & Retainer, Primer	1
11	631027	Plug, Welch	1
12	631021	Inlet Needle, Seat & Clip Assy. (Incl. #13)	1

Ref. No.	Part No.	Description	No. Used
13	631022	Clip, Inlet Needle	1
14	632019	Float, Carburetor	1
15	631024	Shaft, Float	1
16	631700	Bowl, Float	1
21	631334	Gasket, Bowl-to-body	1
22	631935	Nut, Float Bowl	1
25	631028	Gasket, Bowl-to-body	1
26	631807	Fitting, Fuel Inlet	1
27	632158	Spacer	1

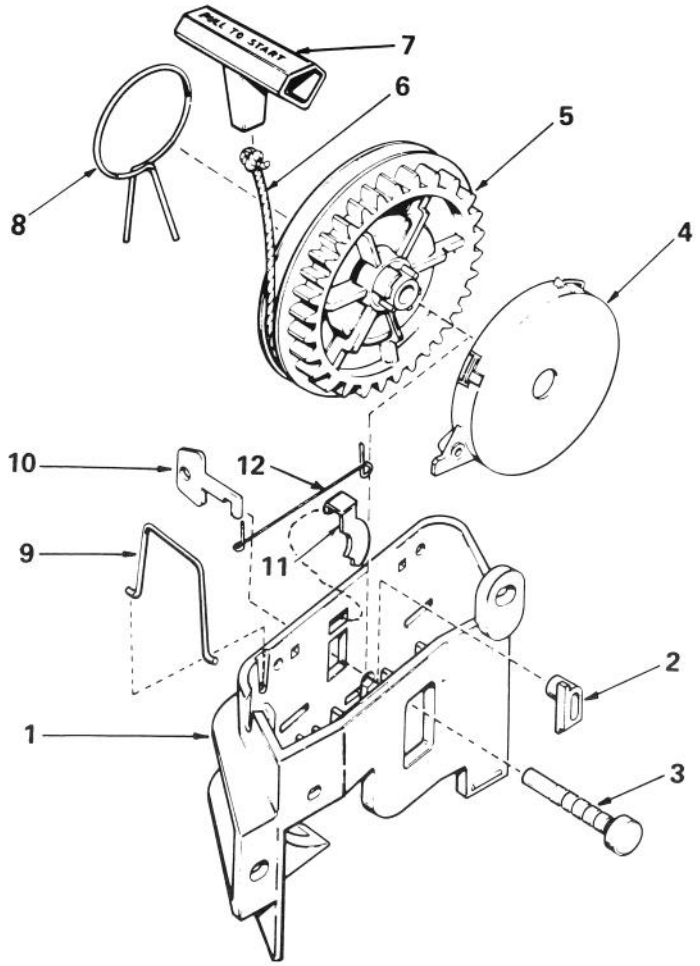

STARTER ASSEMBLY NO. 590532

Ref. No.	Part No.	Description	No. Used
1	590523	Bracket, Starter	1
2	590524	Pawl, Locking (Not used on all engine models)	1
3	590525	Pin, Pulley	1
4	590526	Spring Assy., Rewind (Incl. #3)	1
5	590522	Pulley, Starter	1
6	590535	Rope, Starter (Length 95" & 9/64" Dia.)	1

Ref. No.	Part No.	Description	No. Used
7	590452	Handle, Starter	1
8	590554	Spring, Brake	1
9	590529	Clip, Rope	1
10	590530	Key (Not used on all engine models)	1
11	590533	Pawl, Starter	1
12	590534	Spring, Pawl	1

PRODUCT CHANGES

In an effort to make improvements available to TORO owners as quickly as possible, minor changes are incorporated into Toro's products from time to time that do not become immediately shown in the Parts Catalog. If such a change apparently has been made in your unit, which is not reflected in your manual, see your TORO Distributor or his Authorized TORO Service Dealer for information and part numbers.

IDENTIFICATION AND ORDERING

MODEL AND SERIAL NUMBERS

The Mower has two identification numbers: a model number and a serial number. The two numbers are stamped on a decal which is located on the mower housing between the rear wheels. In any correspondence concerning the mower, supply model and serial numbers to assure that correct information and replacement parts are obtained.

To order replacement parts from an Authorized TORO Service Dealer, supply the following information:

1. Model and serial numbers of the mower.
2. Part number, description, and quantity of part(s) desired.

Note: Do not order by reference number if a parts catalog is being used; use the PART NUMBER.

The Toro Promise

A ONE YEAR LIMITED WARRANTY

The Toro Company promises to repair your TORO Product if defective in materials or workmanship. The following time periods from the date of purchase apply:

Residential Product . . . . . 1 Year
Residential Products Used Commercially . . . 45 Days

The costs of parts and labor are included, but the customer pays the transportation costs. Just return any residential product to an Authorized TORO Service Dealer or TORO Distributor.

Should you feel your TORO Product is defective and wish to rely on The Toro Promise, the following procedure is recommended:

1. Contact any Authorized TORO Service Dealer, TORO Master Service Dealer, or TORO Distributor (the Yellow Pages of your telephone directory is a good reference source).
2. He will either instruct you to return the product to him or recommend another Authorized TORO Service outlet which might be more convenient.
3. Bring the product along with your original sales slip, or other evidence of purchase date, to the service dealer.
4. The servicing dealer will inspect the unit, advise you whether the product is defective and, if so, make all repairs necessary to correct the defect without extra charge to you.

If for any reason you are dissatisfied with the dealer's analysis of the defect or the service performed, you may contact us.

Write:

TORO Consumer Service Department
8111 Lyndale Avenue South
Minneapolis, Minnesota 55420

The above remedy of product defects through repair by an Authorized TORO Service Dealer is the purchaser's sole remedy for any defect.

THERE IS NO OTHER EXPRESS WARRANTY. ALL IMPLIED WARRANTIES OF MERCHANTABILITY AND FITNESS FOR USE ARE LIMITED TO THE DURATION OF THE EXPRESS WARRANTY.

Some states do not allow limitations on how long an implied warranty lasts, so the above limitation may not apply to you.

This warranty applies only to parts or components which are defective and does not cover repairs necessary due to normal wear, misuse, accidents, or lack of proper maintenance. Regular, routine maintenance of the unit to keep it in proper operating condition is the responsibility of the owner.

All warranty repairs reimbursable under The Toro Promise must be performed by an Authorized TORO Service Dealer using Toro approved replacement parts.

Repairs or attemped repairs by anyone other than an Authorized TORO Service Account are not reimbursable under The Toro Promise. In addition, these unauthorized repair attempts may result in additional malfunctions, the correction of which is not covered by warranty.

THE TORO COMPANY IS NOT LIABLE FOR INDIRECT, INCIDENTAL OR CONSEQUENTIAL DAMAGES IN CONNECTION WITH THE USE OF THE PRODUCT INCLUDING ANY COST OR EXPENSE OF PROVIDING SUBSTITUTE EQUIPMENT OR SERVICE DURING PERIODS OF MALFUNCTION OR NON-USE.

Some states do not allow the exclusion or limitation of incidental or consequential damages, so the above limitation or exclusion may not apply to you.

This warranty gives you specific legal rights, and you may also have other rights which vary from state to state.

COUNTRIES OTHER THAN THE UNITED STATES OR CANADA

Customers who have purchased TORO products exported from the United States or Canada should contact their TORO Distributor (Dealer) to obtain guarantee policies for your country, province or state. If for any reason you are dissatisfied with your Distributor's service or have difficulty obtaining guarantee information, contact the TORO importer. If all other remedies fail, you may contact us at The Toro Company.

Compliance with Radio Interference Regulations Certified.
Certifie Conforme au Reglement sur le Brouillage Radioelectrique.