FORM NO. 3312-160

TORO®

MODEL NO. 20773-3000001 & UP

PARTS CATALOG

21" S.P. REAR BAGGER

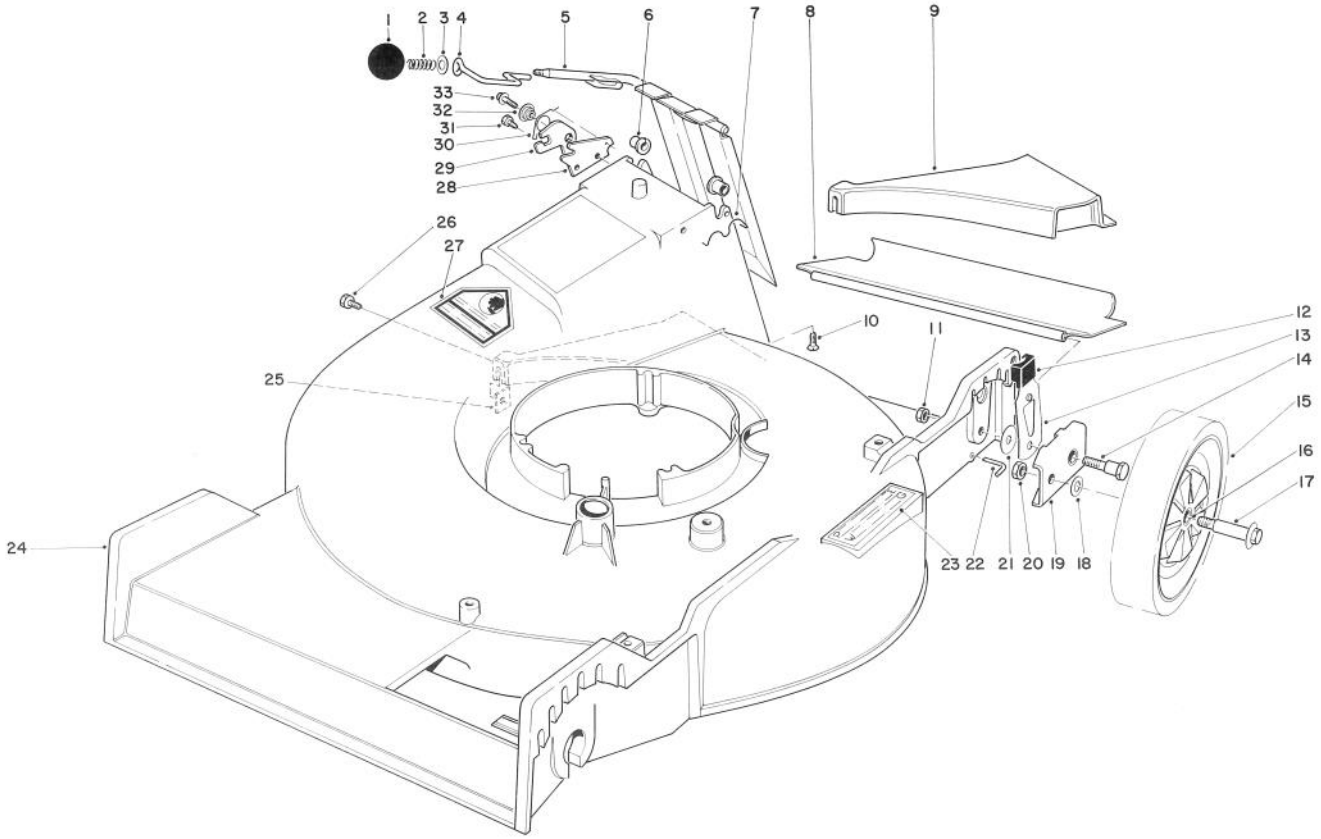

HOUSING ASSEMBLY

Ref. No.	Part No.	Description	No. Used
1	233-21	Knob — Door Handle	1
2	23-0920	Spring — Compression	1
3	23-1120	Washer — Plain	1
4	23-0940	Latch — Door	1
5	43-7900	Door	1
6	23-0880	Bushing — Split Flange	2
7	33-4830	Retainer — Door	1
8	23-0560	Trailing Shield	1
9	23-0360	Insert — Rear	1
10	32144-17	Screw — Thread Forming	2
11	3296-29	Nut — Lock	2
12	25-7740	Knob Arm	2
13	44-1020	Spring Arm	2
14	44-5270	Screw — Pivot	2
15	27-6200	Wheel & Tire Assembly (Incl. Ref. #16)	2
16	27-6250	Bushing — Wheel	4
17	27-6230	Wheel — Bolt	2

Ref. No.	Part No.	Description	No. Used
18	40-1940	Washer — Wheel	2
19	47-2940	Pivot Arm	2
20	32146-6	Nut — Lock	2
21	33-0390	Washer — Pivot	2
22	33-3202	Rod — Shield	1
23	46-9050	Decal — Step Pad	1
24	11-5099	Housing (Incl. Ref. #23 & 27)	1
25	26-0660	Nut — Special	1
26	32104-114	Screw — Self Tapping Indent Hex Hd.	1
27	43-8480	Decal — Danger	1
28	23-1040	Plate — Latch	1
29	42-4010	Latch — Interlock	1
30	23-1200	Spring — Torsion	1
31	11-9760	Screw — Thread Forming Hex Washer Hd.	1
32	43-4840	Spacer — Latch	1
33	32104-17	Screw — Self Tapping Hex Hd.	1

COPYRIGHT © ALL RIGHTS RESERVED

The Toro Company — 1983

MINNEAPOLIS, MN 55420 — U.S.A.

PRICE $1.00

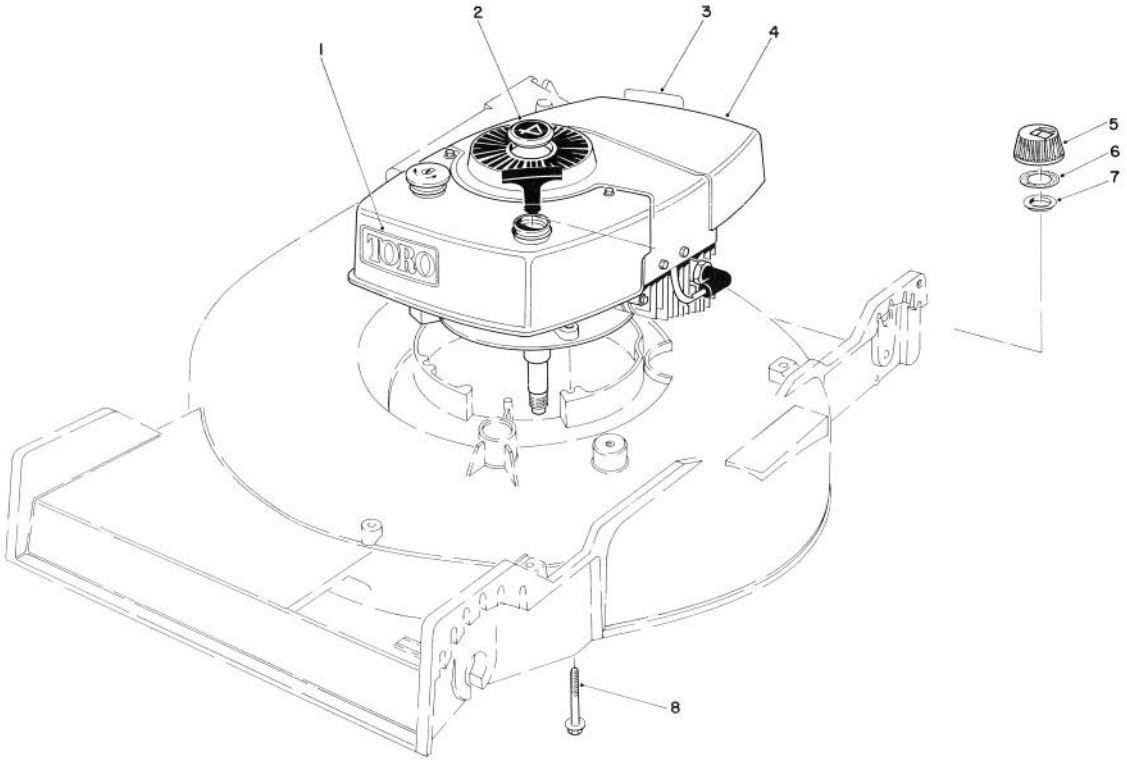

ENGINE ASSEMBLY

Ref. No.	Part No.	Description	No. Used
1	44-0510	Decal — Toro Engine	1
2	38-1480	Button — Plug 4 Cycle	1
3	37-1580	Decal — Maintenance, Engine	1
4	221-733	Engine	1
5	27-7872	Gas Cap Assembly (Incl. Ref. #6 & 7)	1
6	2210-144	Gasket — Gas Cap	1
7	2210-143	Baffle — Gas Cap	1
8	11-0581	Screw — Cap Thread Forming	3
*	11-4119	Loose Parts	1

*Not Illustrated

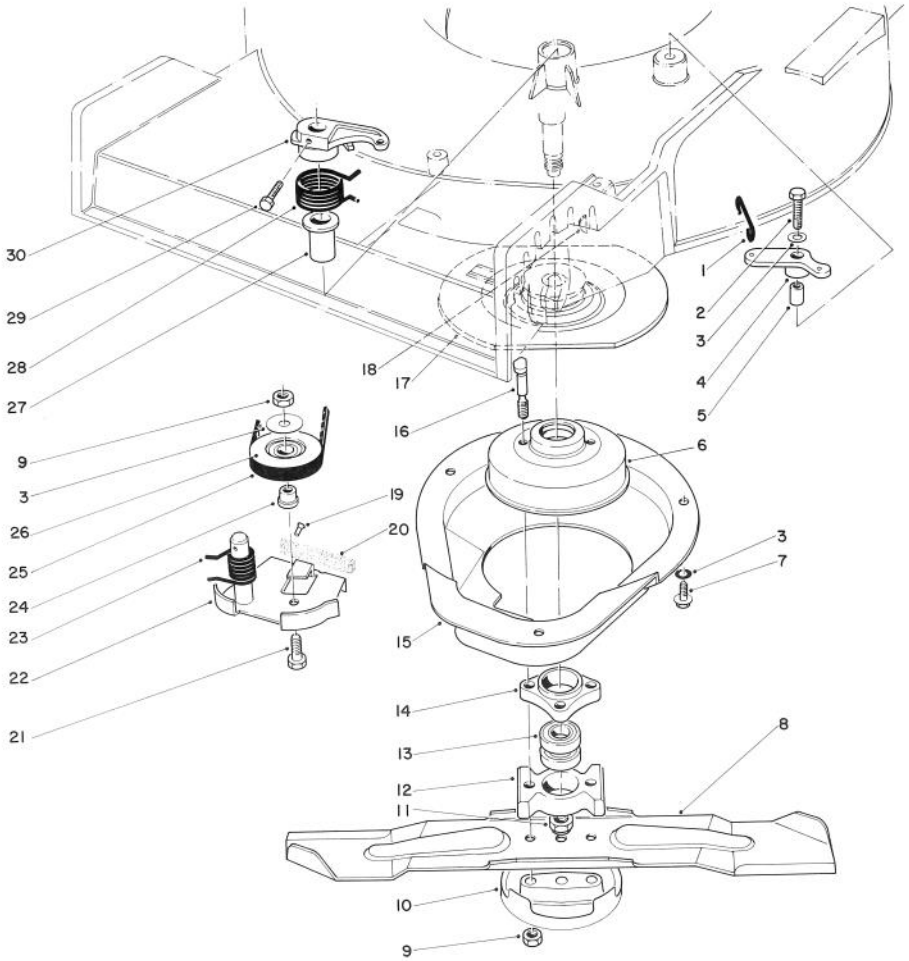

BLADE BRAKE CLUTCH ASSEMBLY

Ref. No.	Part No.	Description	No. Used
1	43-1380	Link — Control	1
2	32104-107	Screw — Self-Tapping Hex Hd.	1
3	3256-2	Washer — Plain	5
4	46-5640	Bell Crank	1
5	42-1330	Sleeve — Bell Crank	1
6	42-1020	Drum — Brake	1
7	32144-11	Screw — Thread Forming Hex Washer Hd.	3
8	42-1000	Blade 21"	1
9	3296-47	Nut — Lock	3
10	42-0910	Cup — Anti Scalp	1
11	3296-33	Nut — Lock	1
12	42-6760	Spacer — Blade	1
13	38-7820	Bearing	2
14	42-6890	Hub Assembly (Incl. Ref. #13)	1
15	46-8710	Shield	1

Ref. No.	Part No.	Description	No. Used
16	42-3190	Bolt — Blade	2
17	43-7720	Flywheel	1
18	3257-3	Key Woodruff	1
19	3295-23	Rivet — Semi Tubular	2
20	42-0890	Pad — Brake	1
21	322-16	Capscrew	1
22	42-0940	Brake Plate	1
23	46-5670	Spring — Torsion Lower	1
24	46-5630	Hub — Idler Pulley	1
25	42-0880	V-Belt	1
26	46-5650	Pulley Idler	1
27	46-6680	Bushing — Flanged	1
28	46-5660	Spring — Torsion Upper	1
29	32104-97	Screw — Self Tapping Hex Hd.	1
30	42-0950	Lever	1

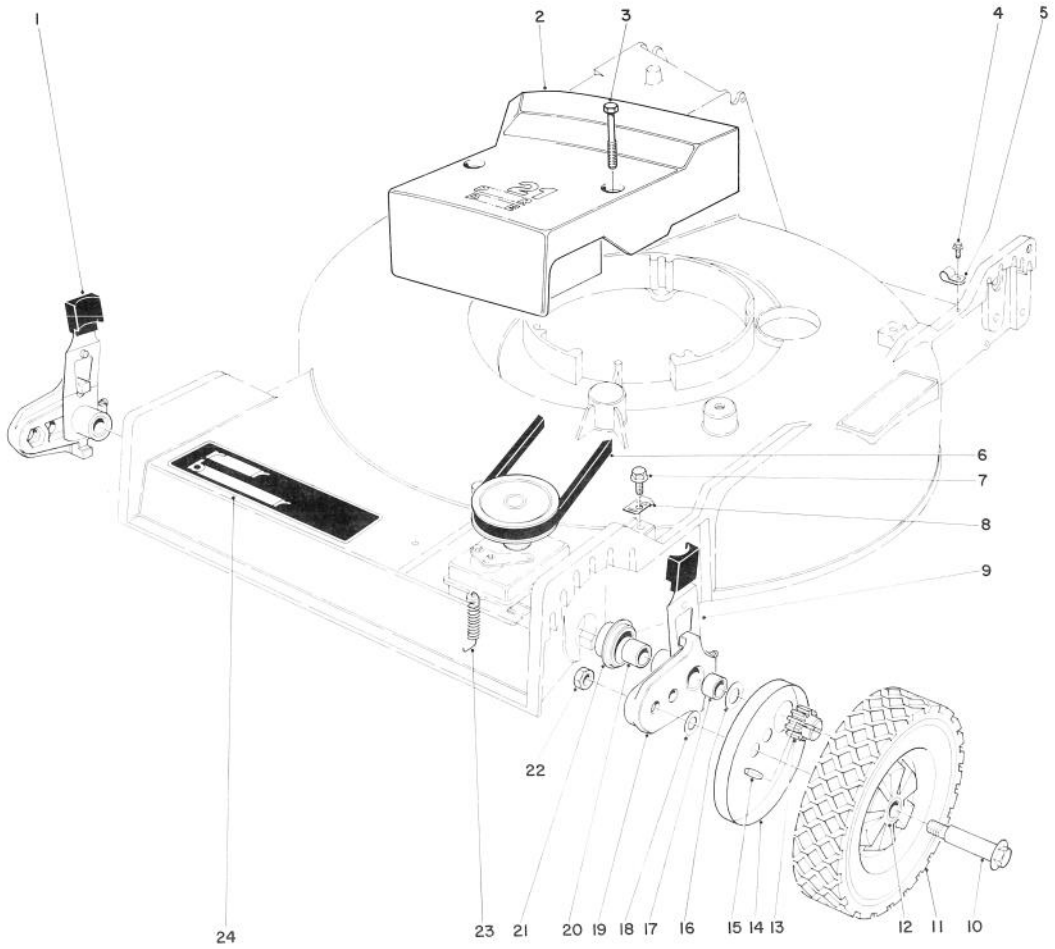

FRONT WHEEL & PIVOT ARM ASSEMBLY

Ref. No.	Part No.	Description	No. Used
1	25-7740	Knob Arm	2
2	46-8780	Cover — Belt	1
3	37-7261	Screw — Thread Forming Hex Washer Hd.	2
4	12-5450	Screw — Thread Forming Hex Hd.	1
5	2412-83	R-Clamp	1
6	5-4505	V-Belt	1
7	32144-11	Screw — Thread Forming Hex Washer Hd.	2
8	46-5610	Clamp — Cable	2
9	44-1030	Spring Arm	2
10	27-6230	Wheel Bolt	2
11	11-1419	Wheel Assembly (Incl. Ref. #12)	2

Ref. No.	Part No.	Description	No. Used
12	27-6250	Bushing — Wheel	4
13	46-6520	Gear — Pinion	2
14	36-5630	Cover — Wheel	2
15	32121-98	Pin — Spring Coiled	2
16	46-6510	Washer — Thrust	4
17	256-110	Bushing	2
18	40-1940	Washer	2
19	42-3510	Pivot Arm (Incl. Ref. #17 & 20)	2
20	256-263	Bushing	2
21	23-0380	End Cap	2
22	32146-6	Nut — Lock	2
23	17-4490	Spring — Tension	1
24	44-0460	Decal — Deck	1

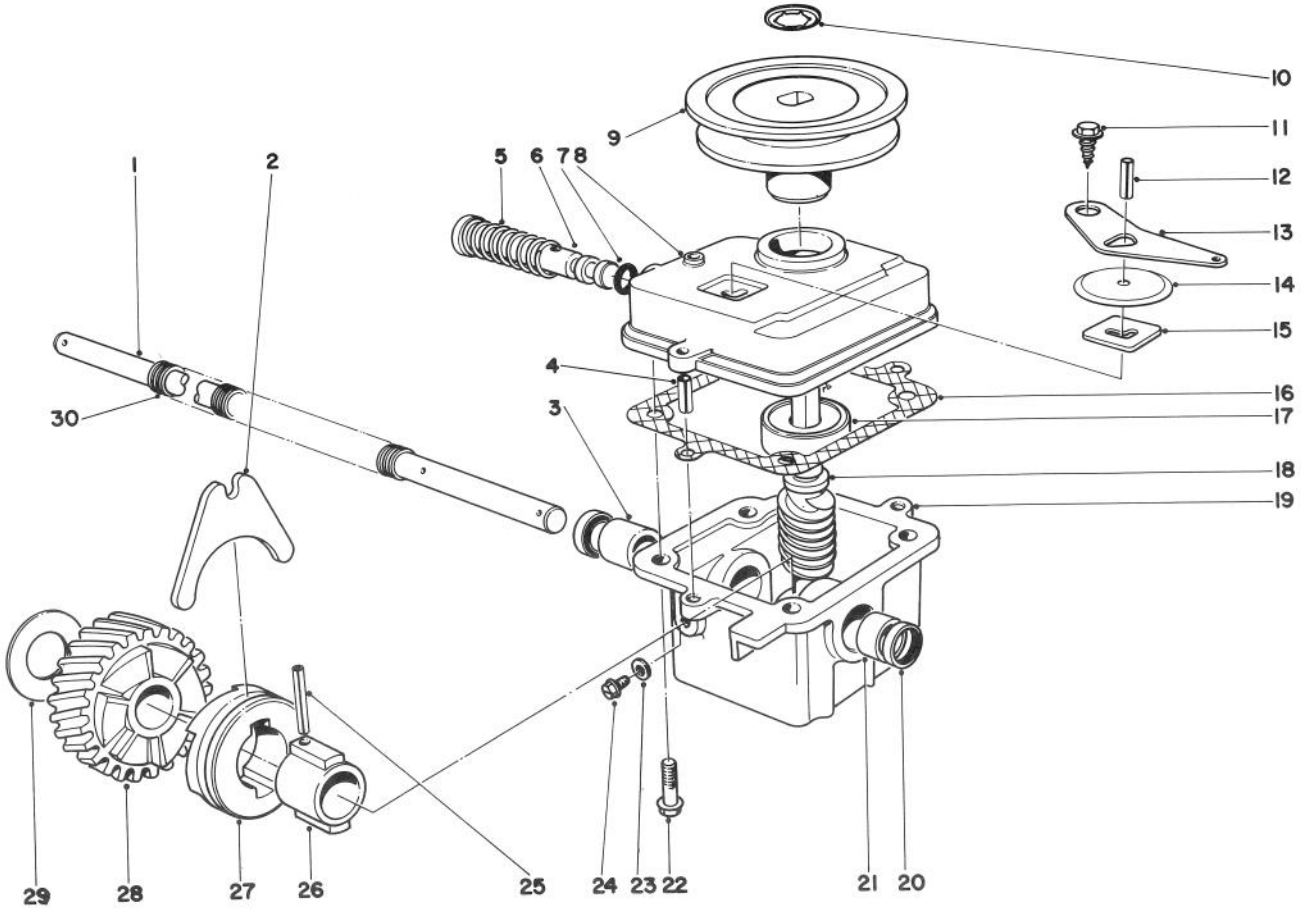

GEAR CASE ASSEMBLY

Ref. No.	Part No.	Description	No. Used
1	37-9440	Drive Shaft	1
2	5-3247	Shifter Fork	1
3	256-263	Bushing	1
4	32121-1	Roll Pin	2
5	3-0731	Spring	1
6	46-8240	Shifter Rod	1
7	237-137	O-Ring	1
8	39-1100	Cover — Gear Case	1
9	18-9760	Pulley	1
10	3290-346	Retainer — Push On	1
11	32140-64	Screw — Self Tapping	1
12	32121-23	Roll Pin	1
13	5-3252	Shifter Arm	1
14	3-2615	Dust Cover	1
15	3-0681	Latch Plate	1
16	36-1000	Gasket	1

Ref. No.	Part No.	Description	No. Used
17	251-284	Bearing	1
18	8-5679	Worm Shaft/Gear (Incl. Ref. #28)	1
19	8-0479	Gear Case (Incl. Ref. #3,20&21)	1
20	253-140	Oil Seal	2
21	256-110	Bushing	1
22	11-9760	Screw	4
23	46-9640	Gasket — Fill Plug	1
24	28-1550	Nylon Screw	1
25	32121-88	Coil Pin	1
26	3-0721	Sleeve	1
27	19-5660	Clutch Jaw	1
28		Helical Gear	1
29	3-0724	Thrust Washer	1
30	24-8690	Cover — Drive Shaft	1
*	11-4719	Gear Case Assembly Complete	1

*Not Illustrated

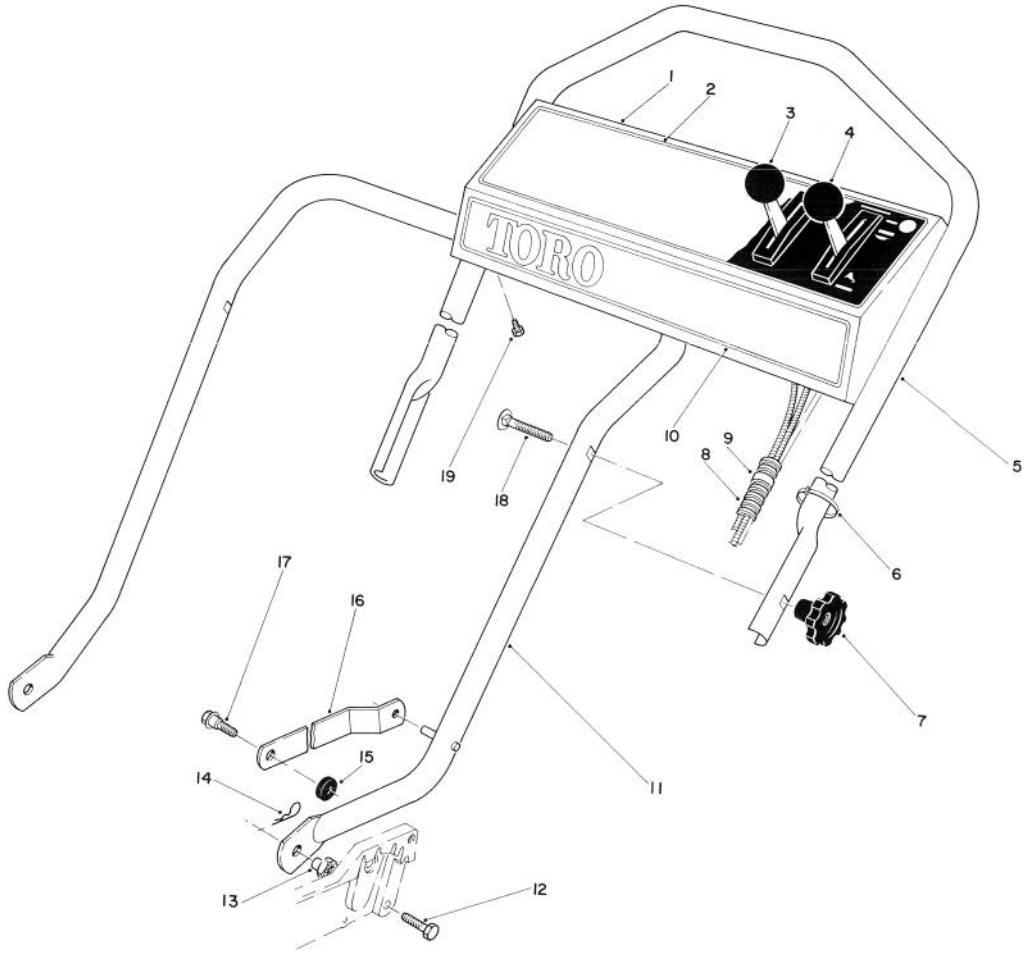

HANDLE ASSEMBLY

Ref. No.	Part No.	Description	No. Used
1	11-5109	Panel — Control (Incl. Ref. # 2)	1
2	46-7400	Decal — Instructions	1
3	46-6040	Control — Traction (Bend Type #1) (Sheath Lg. 65½") (Wire Lg. 2½")	1
4	46-6010	Control — Throttle (Bend Type #1) (Sheath Lg. 53½") (Wire Lg. 2")	1
5	46-4990	Handle — Upper	1
6	3290-378	Cable Tie	1
7	19-4050	Knob — Handle Release	2
8	46-6442	Cover — Control Cables	1
9	2412-50	Clip — Convoluted Tubing	2
10	46-7380	Decal — Toro, Panel	1

Ref. No.	Part No.	Description	No. Used
11	33-4340	Lower Handle Assembly	1
12	322-5	Screw Cap Hex Hd.	2
13	12-2080	Nut — Handle Pivot	2
14	3290-255	Pin — Cotter Hair	2
15	3-3287	Spacer — Handle Latch	2
16	26-0760	Latch — Handle	2
17	5-2490	Screw — Handle	2
18	17-9421	Screw — Handle	2
19	32104-76	Screw — Self Tapping Slotted Hex Hd.	3

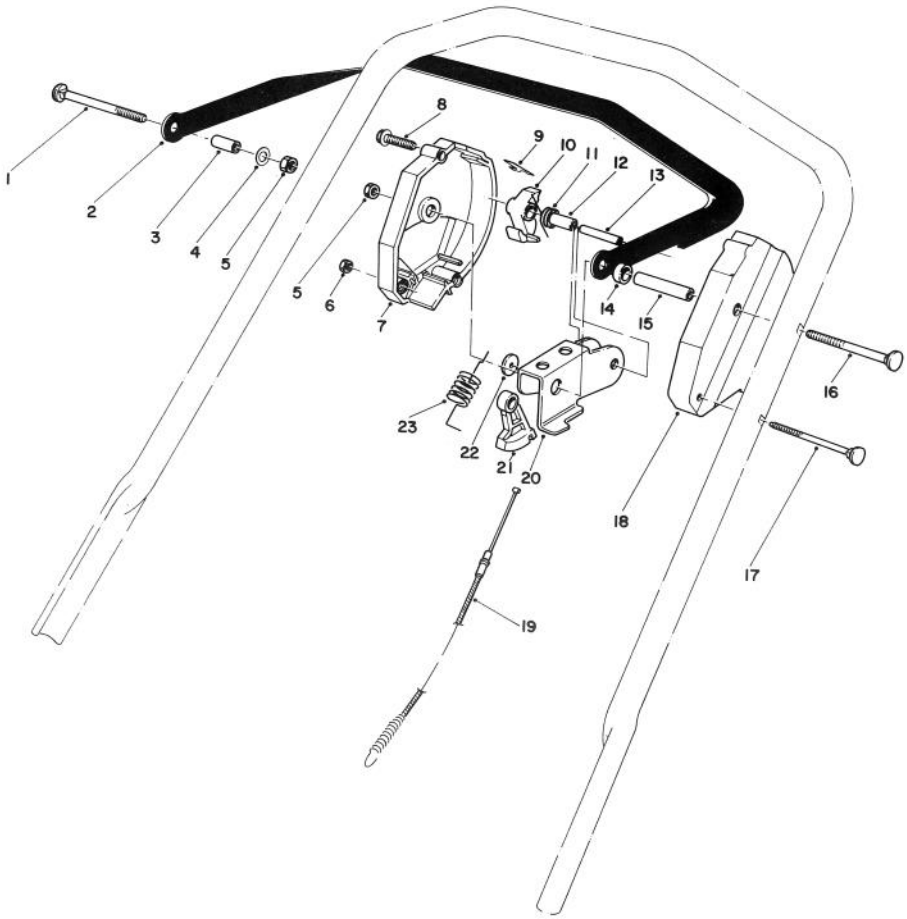

TRACTION CONTROL ASSEMBLY

Ref. No.	Part No.	Description	No. Used
1	17-9421	Screw — Handle	1
2	46-5560	Control Bar Assembly	1
3	46-5580	Spacer	1
4	3256-2	Washer — Plain	1
5	3296-47	Nut — Lock	2
6	3296-42	Nut — Lock	1
7	46-5450	Housing Control R.H.	1
8	46-7040	Screw — Thread Forming Hex Washer Hd.	2
9	46-5570	Spring — Leaf	1
10	46-5530	Hook — Control	1
11	46-5510	Spring — Torsion	1

Ref. No.	Part No.	Description	No. Used
12	46-5550	Bushing	1
13	32121-9	Pin — Roll Slotted	1
14	256-276	Spacer — Nylon	1
15	46-5590	Spacer	1
16	17-9422	Screw — Handle	1
17	46-6431	Screw — Handle	1
18	46-5460	Housing — Control L.H.	1
19	46-5470	Cable — Clutch	1
20	46-5490	Rocker	1
21	46-5540	Lever — Cable	1
22	46-5600	Washer — Nylon	1
23	46-5500	Spring — Extension	1

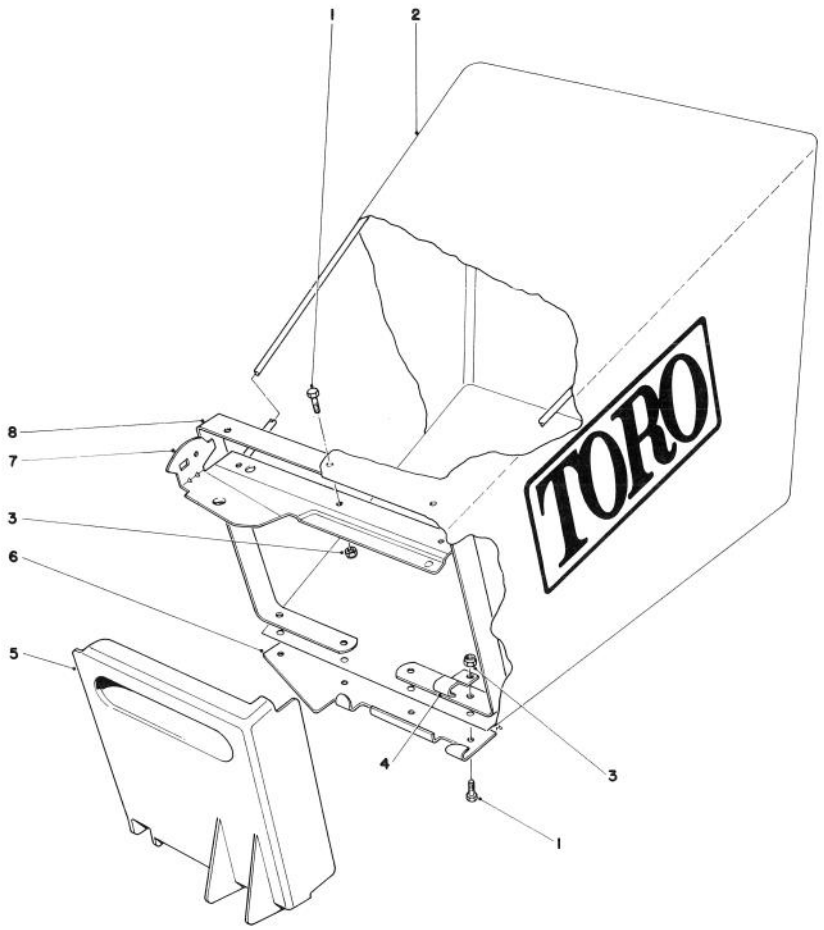

GRASS BAG ASSEMBLY

Ref. No.	Part No.	Description	No. Used
1	3290-321	Hex Hd. Machine Screw	7
2	6-1389	Grass Bag	1
3	3290-419	Locknut	7
4	23-5100	Support Bracket	1
5	23-1140	Bag Door	1

Ref. No.	Part No.	Description	No. Used
6	23-1150	Door Bracket	1
7	27-8170	Bag Frame	1
8	23-1110	Bag Support	1
*	6-7859	Grass Bagging Kit (Incl. Ref. #1 thru 8)	1

*Not Illustrated

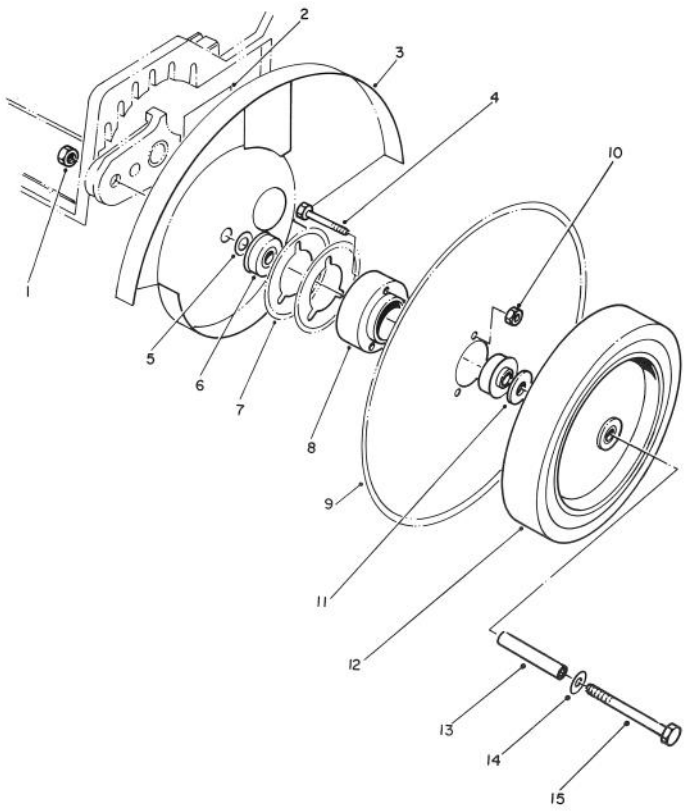

EDGER KIT NO. 57125 (Optional)

Ref. No.	Part No.	Description	No. Used
1	32146-6	Locknut	1
2	47-2210	Decal — Toro Edger	1
3	47-6150	Shield	1
4	3290-360	Hex Hd. Machine Screw	3
5	40-1940	Washer — Wheel Bolt	1
6	251-180	Bearing	2
7	47-6280	Gear — Wheel	2
8	47-6190	Spacer — Hub	1

Ref. No.	Part No.	Description	No. Used
9	47-6200	Blade — Edger 80 Tooth	1
10	32153-1	Locknut	3
11	29-8870	Spacer	1
12	34-0380	Wheel Assembly	1
13	47-6210	Spacer — Wheel Bolt	1
14	3256-3	Washer	1
15	3211-17	Capscrew	1

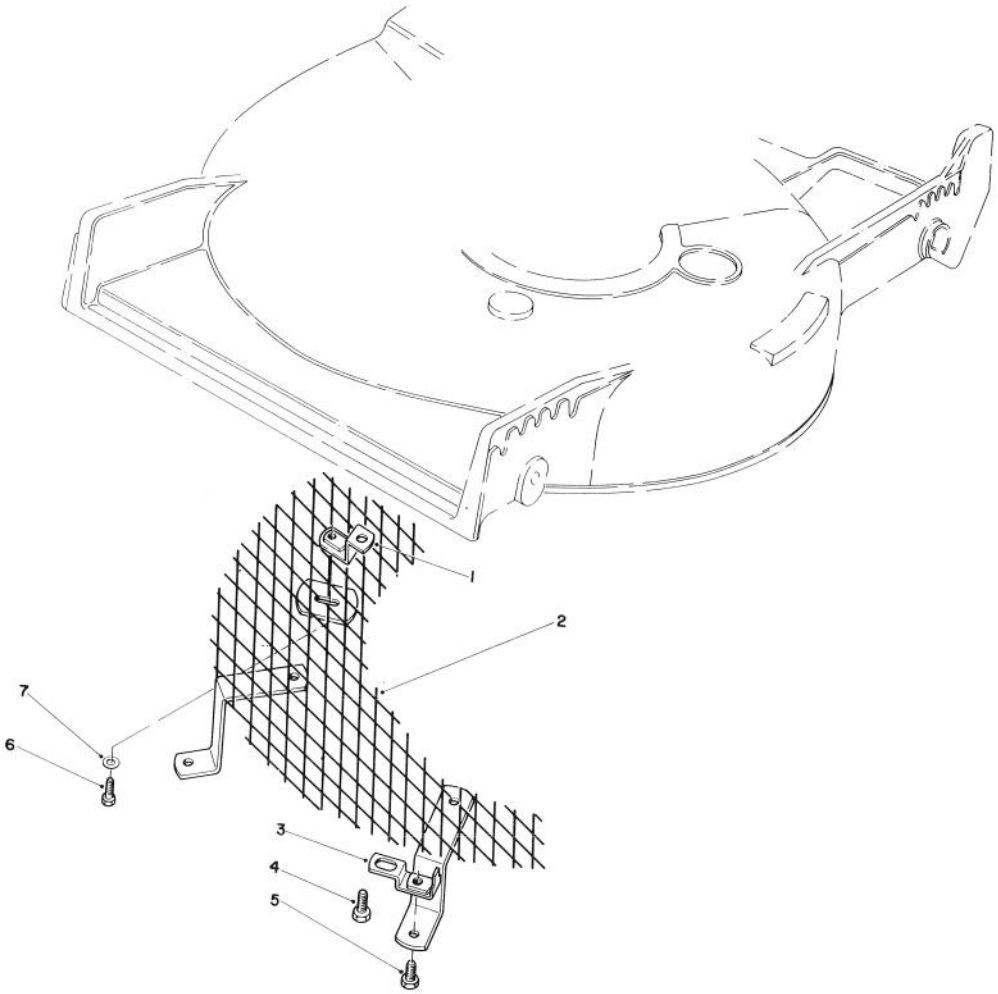

LEAF SHREDDER KIT MODEL NO. 59157 (Optional)

Ref. No.	Part No.	Description	No. Used
1	47-6260	Bracket	1
2	47-6230	Screen	1
3	46-4880	Mounting Bracket	2
4	32144-11	Screw — Self Tapping	2

Ref. No.	Part No.	Description	No. Used
5	321-3	Capscrew, Hex Hd.	2
6	321-5	Capscrew, Hex Hd.	1
7	3256-1	Washer	1

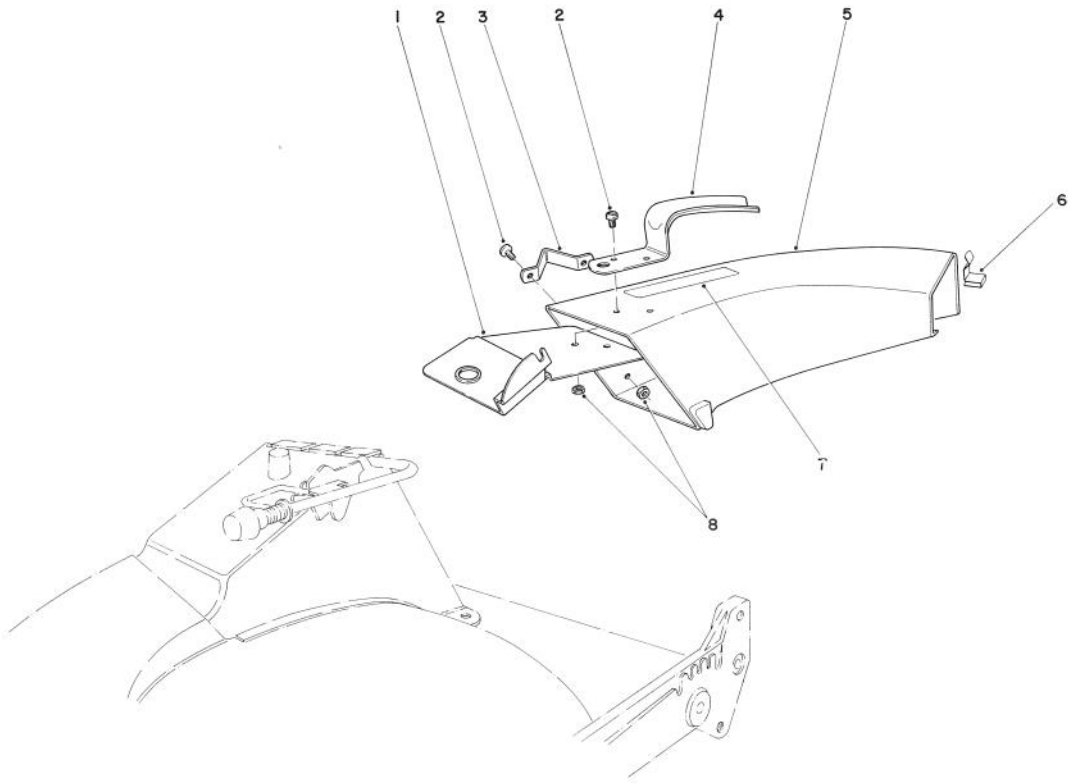

SIDE DISCHARGE CHUTE MODEL NO. 59108 (Optional)

Ref. No.	Part No.	Description	No. Used
1	44-2330	Plate — Discharge Chute	1
2	3251-3	Screw	4
3	46-6580	Bracket	1
4	42-1340	Handle — Grass Chute	1

Ref. No.	Part No.	Description	No. Used
5	44-7720	Chute Assembly (Incl. Ref. #1-8)	1
6	3290-439	Clip	1
7	39-9120	Decal — Caution	1
8	3296-12	Locknut	4

ENGINE TECUMSEH MODEL NO. TNT100-10083E

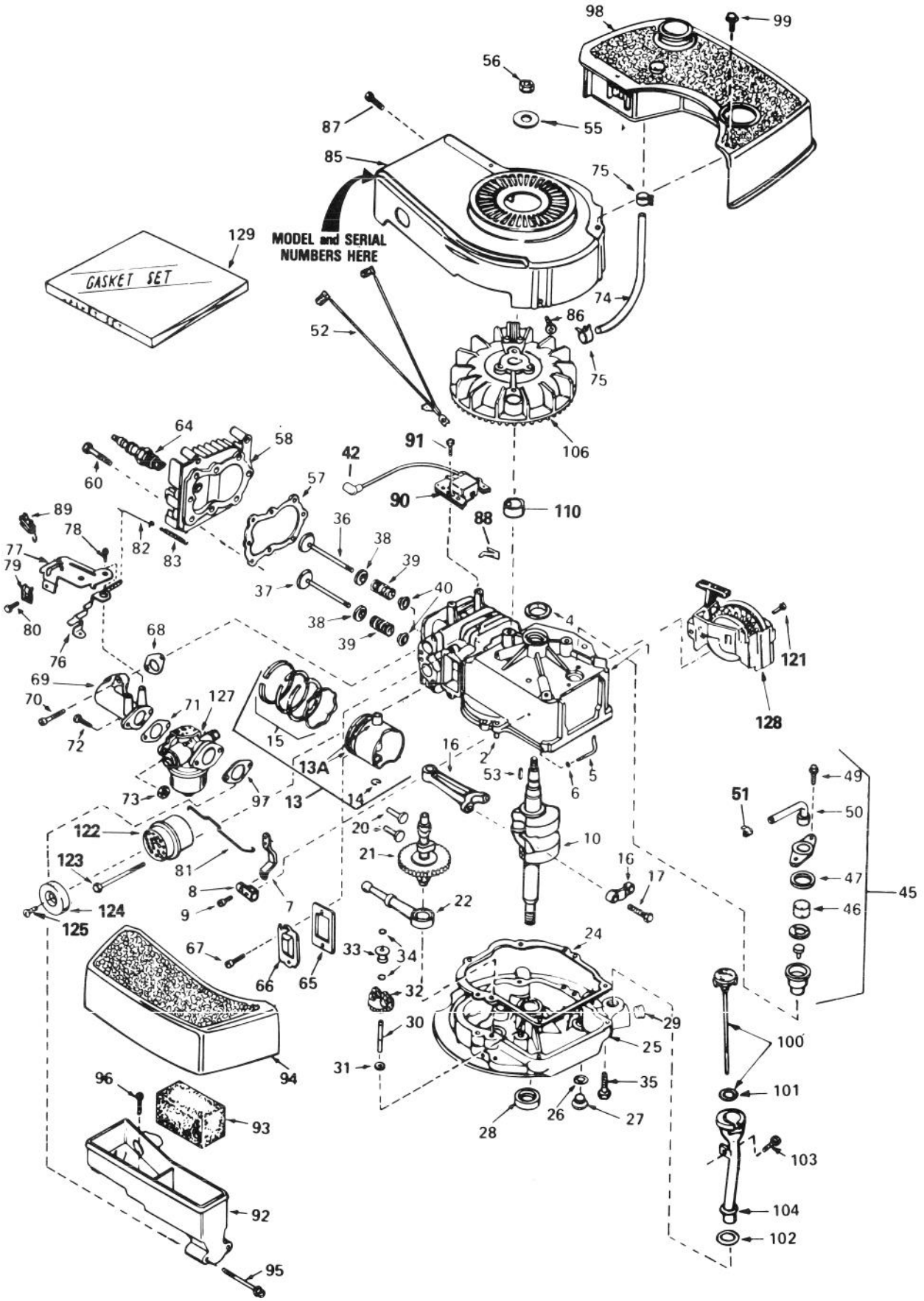

ENGINE TECUMSEH MODEL NO. TNT100-10083E

Ref. No.	Part No.	Description	No. Used
1	35010	Cylinder Assy. (Incl. #2&4)	1
2	26727	Pin, Dowel	2
4	32600	Seal, Oil	1
5	30589	Rod, Governor (Incl. #6)	1
6	28277	Washer, Flat	1
7	32651	Lever, Governor	1
8	31335	Clamp, Governor Lever	1
9	650548	Screw, Hex Washer Hd.	1
10	34821	Crankshaft	1
13	34851	Piston, Pin & Ring Assy. (Std.) (Incl. #13A, 14 & 15)	1
13	34852	Piston, Pin & Ring Assy. (.010 oversize) (Incl. #13A,14&15)	1
13	34853	Piston, Pin & Ring Assy. (.020 oversize) (Incl. #13A,14&15)	1
13A	32603B	Piston & Pin Assy. (Std.) (Incl. #14)	1
13A	32604B	Piston & Pin Assy. (.010 oversize) (Incl. #14)	1
13A	32605B	Piston & Pin Assy. (.020 oversize) (Incl. #14)	1
14	20381	Ring, Piston Pin Retaining	2
15	34854	Ring Set, Piston (Std.)	1
15	34855	Ring Set, Piston (.010 oversize)	1
15	34856	Ring Set, Piston (.020 oversize)	1
16	30963B	Rod Assy., Connecting (Incl. #17)	1
17	32610A	Bolt, Connecting Rod	2
20	27241	Lifter, Valve	2
21	33553	Camshaft (Mechanical Compression Release)	1
22	29914	Pump Assy., Oil	1
24	*26750A	Gasket, Mounting Flange	1
25	30594B	Flange Assy., Mounting (Incl. #26 thru 30)	1
26	*28833	Gasket, Oil Drain Plug	1
27	27244	Plug, Oil Drain	1
28	26208	Seal, Oil	1
29	9556	Plug, Pipe (Sq. Hd.)	1
30	30574	Shaft, Mechanical Governor	1
31	30590A	Washer, Flat	1
32	30591	Gear Assy., Governor (Incl #31)	1
33	30588A	Spool, Governor	1
34	29193	Ring, Retaining	2
35	650488	Screw, Hex Hd.	6
36	29314B	Valve, Intake (Std.) (Incl. #40)	1
36	29315C	Valve, Intake (1/32" oversize) (Incl. #40)	1
37	29313C	Valve, Exhaust (Std.) (Incl. #40)	1
37	29315C	Valve, Exhaust (1/32" oversize) (Incl. #40)	1
38	31671	Cap, Upper Valve Spring	2
39	31672	Spring, Valve	2
40	31673	Cap, Lower Valve Spring	2
42	610118	Cover, Spark Plug	1
45	34214A	Breather Assy. (Incl. #46 thru 51)	1
46	33734	Element, Breather	1
47	*33735	Gasket, Breather	1
49	30200	Screw, Hex Washer Hd. Self-Tap	2
50	33886	Tube, Breather	1
51	33887	Clip, Breather Tube	1
52	34231	Wire, Ground	1
53	611004	Key, Flywheel	1
55	650815	Washer, Belleville	1

Ref. No.	Part No.	Description	No. Used
56	650816	Nut, Flywheel	1
57	*33015	Gasket, Cylinder Head	1
58	34342	Head, Cylinder	1
60	6021A	Screw, Hex Flange Hd.	8
64	33636	Plug, Spark (Champion J-8 or equivalent) *Except for Canada*	1
64	34251 Canada	Resistor-Spark Plug (Canadian Regulations require RJ-17LM Resistor Spark Plug)	1
65	*27234	Gasket, Valve Spring Cover	1
66	32755	Cover, Valve Spring Box	1
67	650128	Screw, Fil. Hd.	2
68	*34690	Gasket, Intake Pipe	1
69	33004A	Pipe, Intake (Incl. #68)	1
70	650451	Screw, Hex Hd.	2
71	*31688	Gasket, Carburetor	1
72	6201	Screw, Hex Hd.	2
73	29752	Nut & Lockwasher Assy.	2
74	30705	Line, Fuel	1
75	26460	Clamp, Fuel Line	2
76	34310	Lever, Control	1
77	33889A	Control Assy., Speed (Incl. #76, 78 & 89)	1
78	650804	Screw, Hex Washer Hd. Shoulder Self-tap	1
79	27793	Clip, Conduit	1
80	28942	Screw, Hex Washer Hd.	1
81	34336	Link, Governor-to-throttle	1
82	33151	Link, Governor Spring	1
83	33890	Spring, Governor	1
85	33891B	Housing, Blower	1
86	650561	Screw, Hex Washer Hd.	2
87	30200	Screw, Hex Washer Hd. Self-tap	2
88	29943	Clip, Spring	1
89	610973	Terminal Assy.	1
90	34443A	Lamination & Coil Assy. (Solid State) (Incl. #42)	1
91	650814	Screw, Hex Hd.	2
92	33895	Body, Air Cleaner	1
93	33896	Filter, Air Cleaner	1
94	33897	Cover, Air Cleaner	1
95	650762	Screw, Fil. Hd.	2
96	650784	Screw, Hex Hd. Taptite w/flatwasher	1
97	*33051	Gasket, Air Cleaner	1
98	33904B	Tank, Fuel	1
99	28763	Screw, Hex Washer Hd.	2
100	33894A	Dipstick, Oil (Incl. #101)	1
101	33590	"O" Ring, Dipstick	1
102	34265	Gasket, Fill Tube	1
103	650562	Screw, Hex Washer Hd.	1
104	34380	Tube, Oil Fill	1
106	611046	Flywheel	1
110	34080	Spacer, Flywheel Key	1
121	650802	Screw, Hex Washer Hd.	2
122	27181B	Muffler (Incl. # 123)	1
123	650795	Screw, Hex Hd.	2
124	32431	Cover, Muffler	1
125	650643	Screw, Pan Hd. Self-tap	1
127	632050A	Carburetor (Incl.-# 71)	1
128	590531	Starter, Side Mount	1
129	33906A	Gasket Set (Incl. items marked *)	1

*Indicates parts included in Gasket Set, Ref. No. 129.

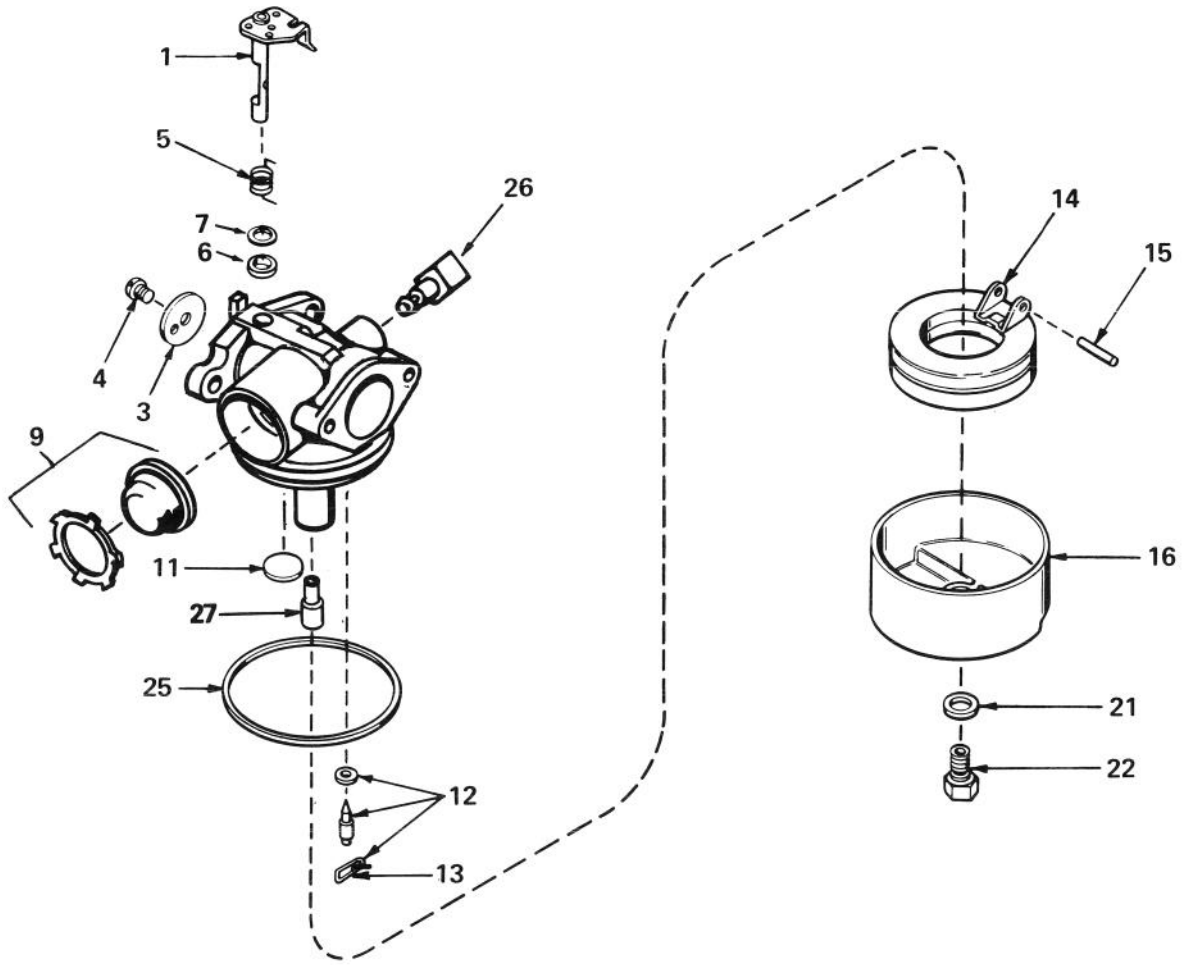

CARBURETOR NO. 632050A

Ref. No.	Part No.	Description	No. Used
1	631615	Shaft & Lever Assy., Throttle	1
3	631616	Shutter, Throttle	1
4	650506	Screw, Throttle Shutter	1
5	631767	Spring, Return	1
6	631971	Seal, Dust	1
7	631184	Washer, Flat	1
9	632047	Bulb & Retainer, Primer	1
11	631027	Plug, Welch	1
12	631021	Inlet Needle, Seat & Clip Assy. (Incl. # 13)	1

Ref. No.	Part No.	Description	No. Used
13	631022	Clip, Inlet Needle	1
14	632019	Float, Carburetor	1
15	631024	Shaft, Float	1
16	631700	Bowl, Float	1
21	631334	Gasket, Bowl-to-body	1
22	631935	Nut, Float bowl	1
25	631028	Gasket, Bowl-to-body	1
26	631807	Fitting, Fuel Inlet	1
27	632158	Spacer	1

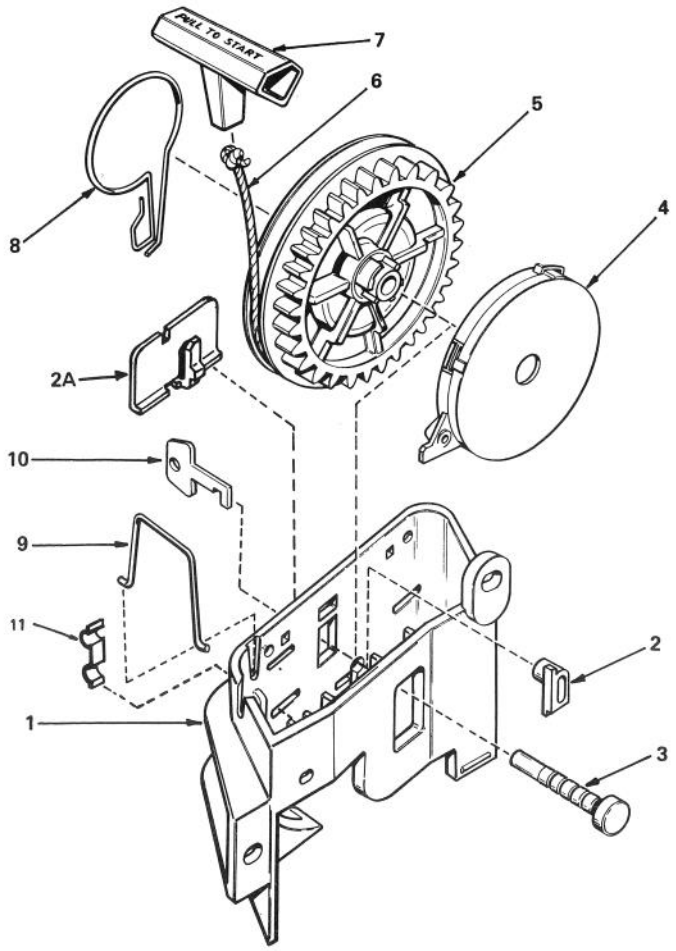

REWIND STARTER NO. 590531

Ref. No.	Part No.	Description	No. Used
1	590523	Bracket, Starter	1
2	590524	Pawl, Locking (Not used on all engine models)	1
2A	590538	Clip, Starter Bracket (Used on starters not equipped with Locking Pawl, Ref. #2)	1
3	590525	Pin, Pulley	1
4	590526	Spring Assy., Rewind (Incl. #3)	1
5	590522	Pulley	1
6	590527	Rope, Starter (Length 65" & 9/64" Diameter)	1
7	590452	Handle, Starter	1
8	590528	Spring, Brake	1
9	590529	Clip, Rope	1
10	590530	Key (Not used on all engine models)	1
11	590500	Clip, Bowden Wire (Not used on all engine models)	1

PRODUCT CHANGES

In an effort to make improvements available to TORO owners as quickly as possible, minor changes are incorporated into Toro's products from time to time that do not become immediately shown in the Parts Catalog. If such a change apparently has been made in your unit, which is not reflected in your manual, see your TORO Distributor or his Authorized TORO Service Dealer for information and part numbers.

IDENTIFICATION AND ORDERING

MODEL AND SERIAL NUMBERS

The Mower has two identification numbers: a model number and a serial number. The two numbers are stamped on a decal which is located on the mower housing between the rear wheels. In any correspondence concerning the mower, supply model and serial numbers to assure that correct information and replacement parts are obtained.

To order replacement parts from an Authorized TORO Service Dealer, supply the following information:

1. Model and serial numbers of the mower.
2. Part number, description, and quantity of part(s) desired.

Note: Do not order by reference number if a parts catalog is being used; use the PART NUMBER.

The Toro Promise

A ONE YEAR LIMITED WARRANTY

The Toro Company promises to repair your TORO Product if defective in materials or workmanship. The following time periods from the date of purchase apply:

Residential Product . . . . . 1 Year
Residential Products Used Commercially . . . 45 Days

The costs of parts and labor are included, but the customer pays the transportation costs. Just return any residential product to an Authorized TORO Service Dealer or TORO Distributor.

Should you feel your TORO Product is defective and wish to rely on The Toro Promise, the following procedure is recommended:

1. Contact any Authorized TORO Service Dealer, TORO Master Service Dealer, or TORO Distributor (the Yellow Pages of your telephone directory is a good reference source).
2. He will either instruct you to return the product to him or recommend another Authorized TORO Service outlet which might be more convenient.
3. Bring the product along with your original sales slip, or other evidence of purchase date, to the service dealer.
4. The servicing dealer will inspect the unit, advise you whether the product is defective and, if so, make all repairs necessary to correct the defect without extra charge to you.

If for any reason you are dissatisfied with the dealer's analysis of the defect or the service performed, you may contact us.

Write:

TORO Consumer Service Department
8111 Lyndale Avenue South
Minneapolis, Minnesota 55420

The above remedy of product defects through repair by an Authorized TORO Service Dealer is the purchaser's sole remedy for any defect.

THERE IS NO OTHER EXPRESS WARRANTY. ALL IMPLIED WARRANTIES OF MERCHANTABILITY AND FITNESS FOR USE ARE LIMITED TO THE DURATION OF THE EXPRESS WARRANTY.

Some states do not allow limitations on how long an implied warranty lasts, so the above limitation may not apply to you.

This warranty applies only to parts or components which are defective and does not cover repairs necessary due to normal wear, misuse, accidents, or lack of proper maintenance. Regular, routine maintenance of the unit to keep it in proper operating condition is the responsibility of the owner.

All warranty repairs reimbursable under The Toro Promise must be performed by an Authorized TORO Service Dealer using Toro approved replacement parts.

Repairs or attemped repairs by anyone other than an Authorized TORO Service Account are not reimbursable under The Toro Promise. In addition, these unauthorized repair attempts may result in additional malfunctions, the correction of which is not covered by warranty.

THE TORO COMPANY IS NOT LIABLE FOR INDIRECT, INCIDENTAL OR CONSEQUENTIAL DAMAGES IN CONNECTION WITH THE USE OF THE PRODUCT INCLUDING ANY COST OR EXPENSE OF PROVIDING SUBSTITUTE EQUIPMENT OR SERVICE DURING PERIODS OF MALFUNCTION OR NON-USE.

Some states do not allow the exclusion or limitation of incidental or consequential damages, so the above limitation or exclusion may not apply to you.

This warranty gives you specific legal rights, and you may also have other rights which vary from state to state.

COUNTRIES OTHER THAN THE UNITED STATES OR CANADA

Customers who have purchased TORO products exported from the United States or Canada should contact their TORO Distributor (Dealer) to obtain guarantee policies for your country, province or state. If for any reason you are dissatisfied with your Distributor's service or have difficulty obtaining guarantee information, contact the TORO importer. If all other remedies fail, you may contact us at The Toro Company.

Compliance with Radio Interference Regulations Certified.
Certifie Conforme au Reglement sur le Brouillage Radioelectrique.