Form No. 3453-885 Rev B

TORO®

Count on it.

Parts Catalog

# ProCore® 648 Aerator

**Model No. 09200—Serial No. 412200000 and Up**

Register at www.Toro.com.
Original Instructions (EN)

CE

*3453-885* B

# Ordering Replacement Parts

To order replacement parts, please supply the part number, the quantity, and the description of each part desired.

### Understanding Reference Numbers

Each identified part in an illustration has a reference number. The reference number for a part also appears in the parts list, along with other information about the part.

This catalog uses two special reference number formats, one to indicate parts in a service assembly and another to indicate the quantity of a given part in an illustration.

### Service Assembly Reference Numbers

Parts in service assemblies have reference numbers in the form a:b. The a represents the reference number of the entire service assembly and the b represents a sequential number unique to each part within the service assembly.

For example, a wheel assembly might be identified by reference number 6, the tire by 6:1, the valve by 6:2, and the wheel by 6:3. When you order the assembly identified by reference number 6, you receive all parts identified by reference numbers 6:1,6:2, and 6:3. However, you may also order any part individually. Reference numbers of this type appear in illustration and in parts lists.

### Reference Numbers Indicating Quantity

In an illustration, if a reference number indicates more than one part, the reference number has the form nX y. The n represents the quantity of the part, the X is the multiplication symbol, and the y represents the reference number.

For example, in an illustration, the reference number 2X 37 means that two of the parts identified by reference number 37 are indicated.

# Contents

Control Bail Assembly . . . . . 4
Front Handle Assembly . . . . . 5
Front Fork Assembly . . . . . 6
Fuel Tank Assembly . . . . . 7
Console Assembly . . . . . 8
Console Electronics Assembly . . . . . 9
Line Marker Assembly . . . . . 10
Engine and Muffler Assembly . . . . . 11
Rear Hood and Muffler Shield Assembly . . . . . 12
Shield Assembly No. 107-7546 . . . . . 13
Jackshaft Hood Assembly . . . . . 14
Primary Belt Drive Assembly . . . . . 15
Secondary Belt Drive Assembly . . . . . 16
Hydro Control Assembly . . . . . 17
Hydrostat Pump Assembly . . . . . 18
Hydrostat and Puimp Assembly No. 140-8824 . . . . . 19
Lift System Assembly . . . . . 20
Hydraulic Cylinder Assembly No. 140-2205 . . . . . 21
Control Manifold Assembly No. 106-8802 . . . . . 22
Wheel and Motor Assembly . . . . . 23
(CW) Hydraulic Motor Assembly No. 106-8807 . . . . . 24
(CCW) Hydraulic Motor Assembly No. 106-8806 . . . . . 25
(CCW) Hydraulic Motor Assembly No. 106-8808 . . . . . 26
Brake Latch Assembly . . . . . 27
Hydraulic Tank Assembly . . . . . 28
Hydraulic Fitting Assembly . . . . . 29
Hardline and Hose Assembly . . . . . 31
H-Frame Assembly . . . . . 32
Coring Head Crank No. 1 and 2 Assembly . . . . . 33
Coring Head Crank No. 3 and 4 Assembly . . . . . 34
Coring Head Crank No. 5 and 6 Assembly . . . . . 35
Coring Head Assembly for Rotolinks . . . . . 36
Coring Head Assembly for Turfguards . . . . . 37
Depth Control Assembly . . . . . 38
Depth Actuator Assembly . . . . . 39
Optional Tire Scraper Assembly (Model 09225) . . . . . 40
Attachments and Accessories . . . . . 41

**© 2024—The Toro® Company**
**8111 Lyndale Avenue South**
**Bloomington, MN 55420**



**Contact us at www.Toro.com.**
**Printed in the USA.**
**All Rights Reserved**

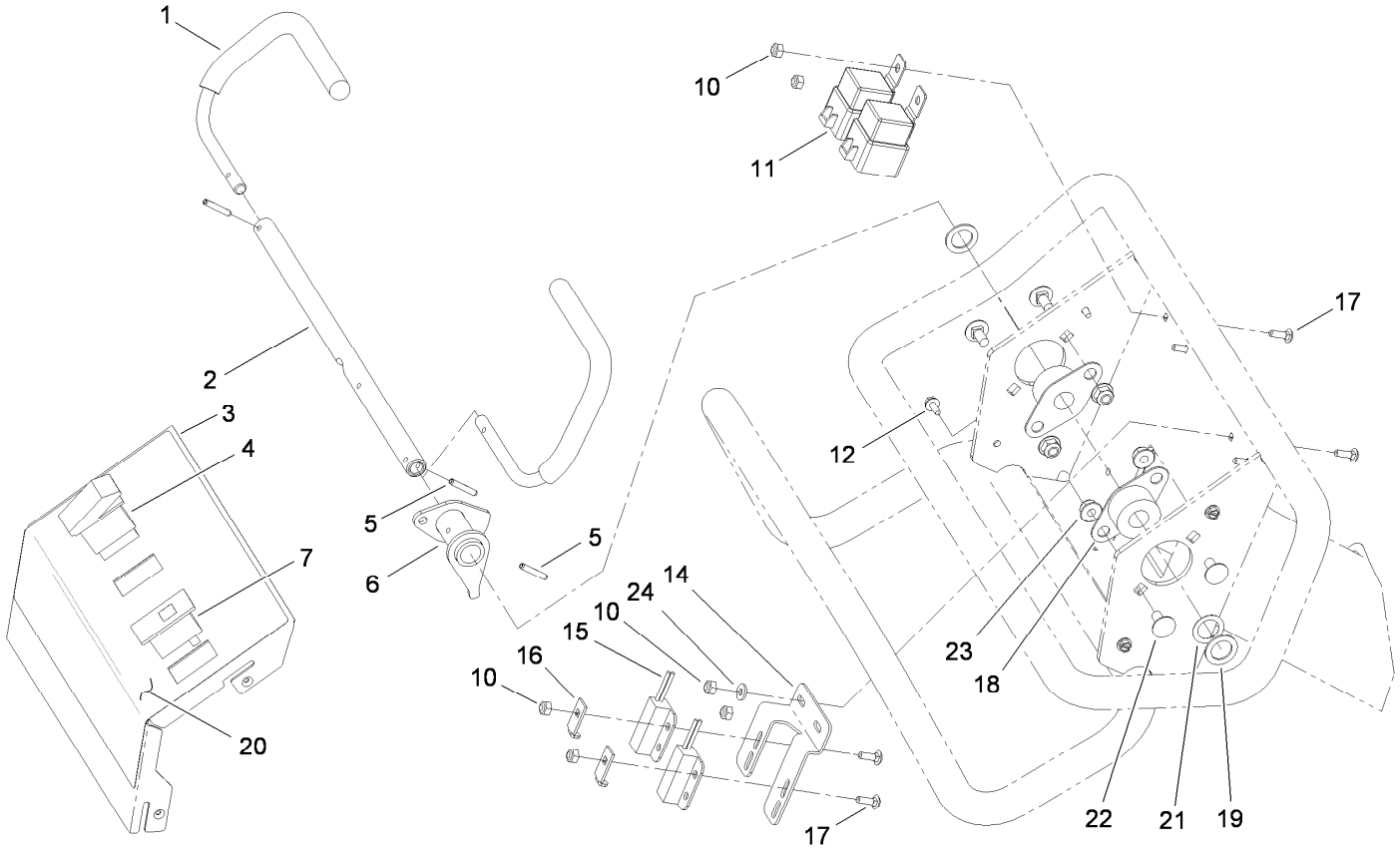


# Control Bail Assembly

| Ref. | Part Number | Qty. | Description |
|---|---|---|---|
| 1 | 115-4719 | 2 | Bail-Traction |
| 2 | 107-3350 | 1 | Shaft-Pivot, Bail V |
| 3 | 105-1183-03 | 1 | Cover-Handle, Control |
| 4 | 106-8921 | 1 | Switch-Rocker, Off-On |
| 5 | 32121-45 | 3 | Pin-Spring |
| 6 | 137-1609 | 1 | Bail Lever (Mach) |
| 7 | 99-7410 | 1 | Indicator-Light, Low-Oil Pressure |
| 10 | 3296-2 | 6 | Nut-Lock, NI |
| 11 | 99-7430 | 2 | Relay-Mini |
| 12 | 32104-60 | 4 | Screw-HWH |
| 14 | 107-3361 | 1 | Mount-Switch |
| 15 | 100-1270 | 2 | Switch-Proximity |
| 16 | 100-4872 | 2 | Plate-Switch, Neutral |
| 17 | 3229-34 | 6 | Screw-CARR |
| 18 | 256-236 | 2 | Bearing-Mount, Flange |
| 19 | 3256-69 | 2 | Washer-Flat |
| 20 | 115-4716 | 1 | Decal-Handle Control Panel, CE |
| 21 | 108-2100 | 1 | Washer-Spring, Curved |
| 22 | 3230-18 | 4 | Screw-CARR |
| 23 | 104-8300 | 4 | Nut-HF, NI |
| 24 | 3256-14 | 2 | Washer-Flat |

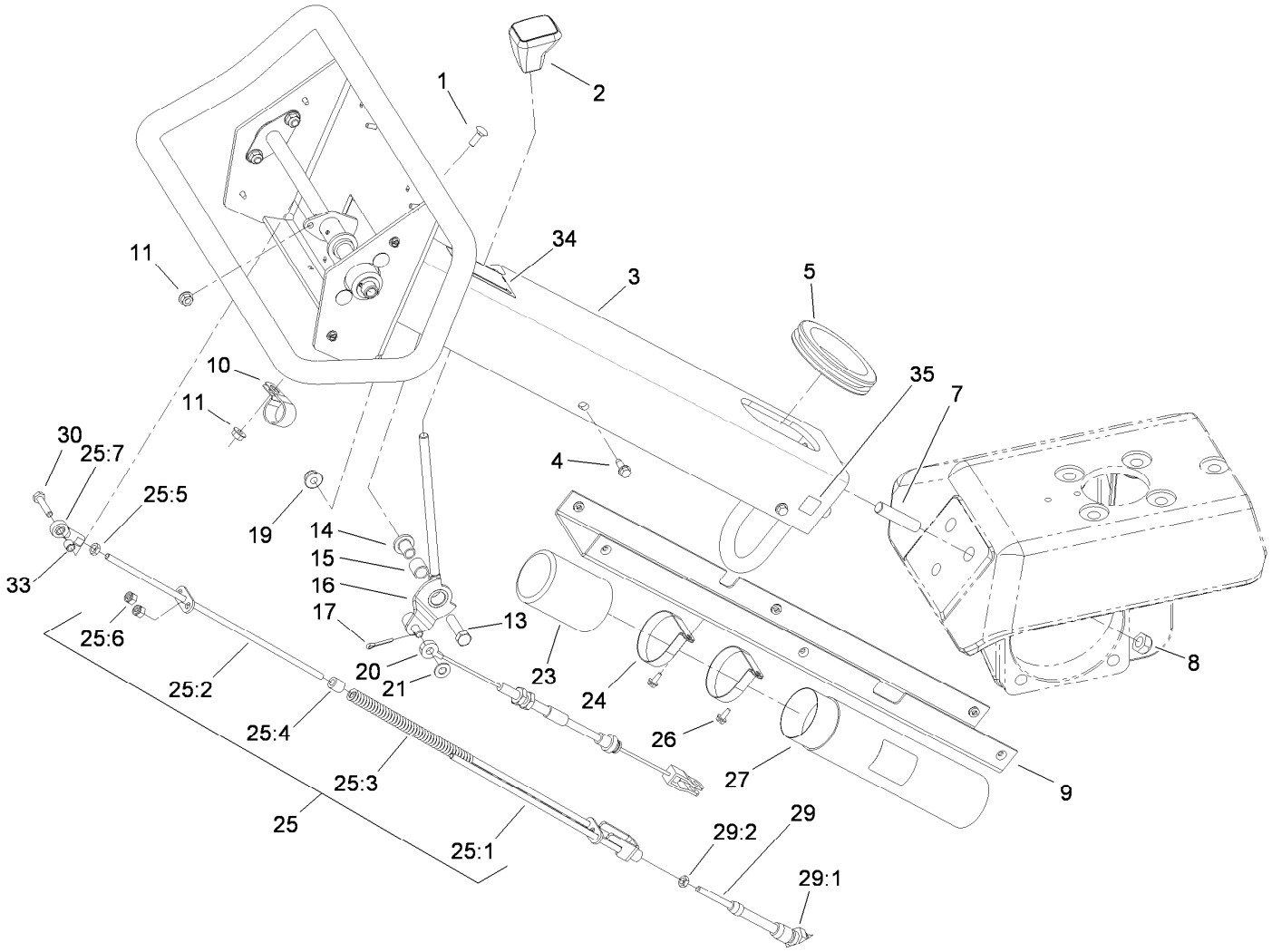


# Front Handle Assembly

| Ref. | Part Number | Qty. | Description |
|---|---|---|---|
| 1 | 3229-1 | 1 | Screw-CARR |
| 2 | 65-8970 | 1 | Knob-Shift |
| 3 | 115-4723SP | 1 | Control Handle ASM |
| 4 | 32144-44 | 6 | Screw-HWH, Thread Roll |
| 5 | 240-8 | 1 | Grommet-Rubber |
| 7 | 80-8680 | 3 | Stud |
| 8 | 3296-19 | 3 | Nut-Hex |
| 9 | 107-3363-03 | 1 | Cover-Lower, Handle |
| 10 | 2412-39 | 1 | Clamp-R |
| 11 | 32128-33 | 2 | Nut-HF |
| 13 | 323-8 | 1 | Screw-HH |
| 14 | 80-7200 | 1 | Spacer-Brake |
| 15 | 256-206 | 1 | Bushing |
| 16 | 86-8420 | 1 | Lever-Brake |
| 17 | 3272-10 | 1 | Pin-Cotter |
| 19 | 104-8301 | 1 | Nut-HF, NI |
| 20 | 106-8896 | 1 | Cable-Latch, Parking |
| 21 | 3256-23 | 1 | Washer-Plain |
| 23 | 104-7048 | 1 | Cap-Housing |

| Ref. | Part Number | Qty. | Description |
|---|---|---|---|
| 24 | 2412-120 | 2 | Clamp-R |
| 25 | 115-6661 | 1 | Rod ASM |
| 25:1 | 107-3360 | 1 | Spring Retainer ASM |
| 25:2 | 107-3354 | 1 | Override Rod ASM |
| 25:3 | 107-3373 | 1 | Spring-Compression |
| 25:4 | 22-7810 | 1 | Spacer |
| 25:5 | 3220-1 | 1 | Nut-Jam |
| 25:6 | 3296-3 | 2 | Nut-Lock |
| 25:7 | 2411-41 | 1 | Rod End-Ball Joint |
| 26 | 32104-60 | 2 | Screw-HWH |
| 27 | 104-7050 | 1 | Tube-Manual |
| 29 | 80-7220 | 1 | Cable-Control, Stroke |
| 29:1 | 3220-6 | 4 | Nut-Jam |
| 29:2 | 3220-1 | 2 | Nut-Jam |
| 30 | 321-8 | 1 | Screw-HH |
| 33 | 99-3545 | 1 | Spacer |
| 34 | 93-9363 | 1 | Decal-Brake, Parking |
| 35 | 93-9084 | 3 | Decal-Point, Lift |

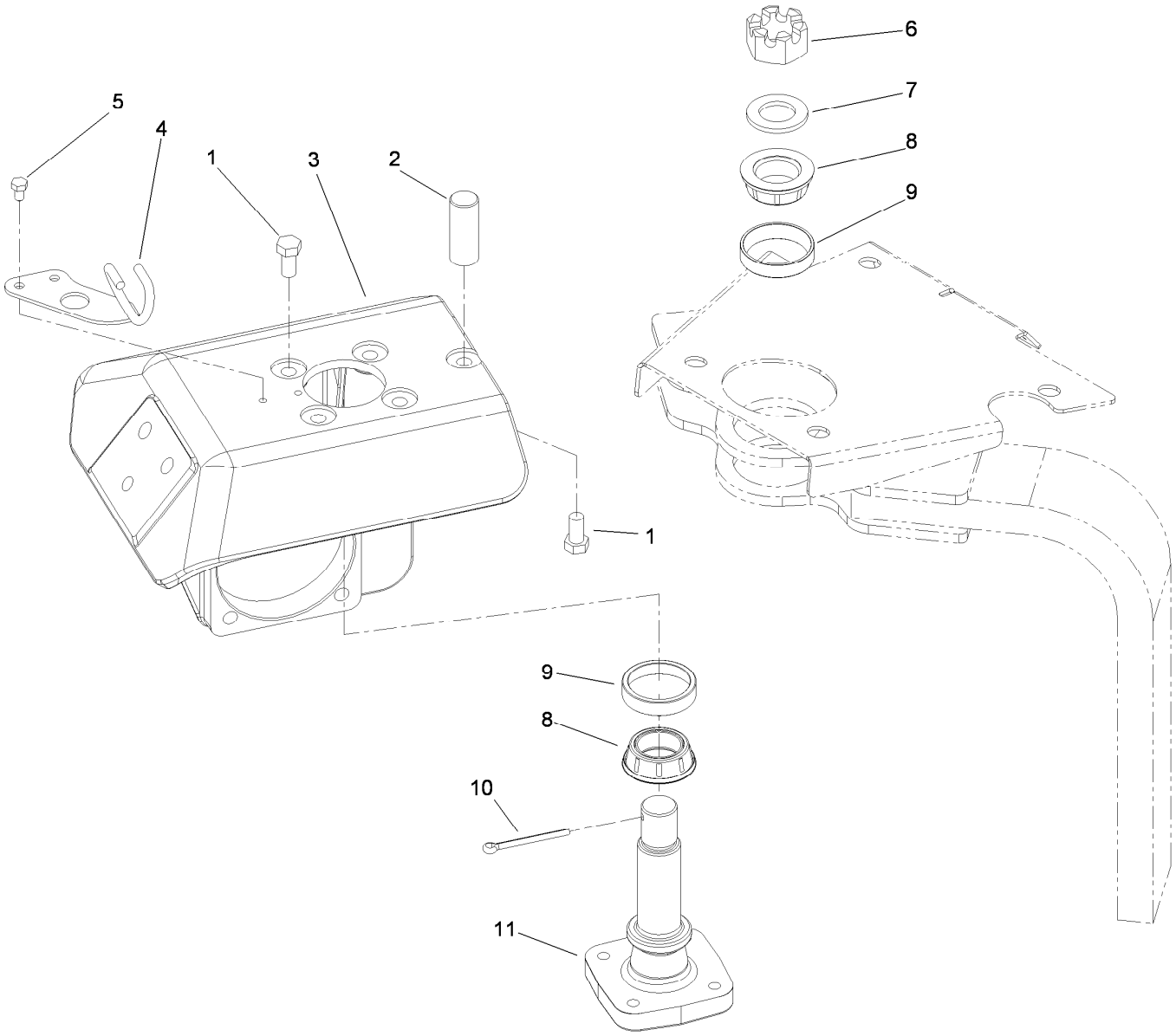


# Front Fork Assembly

| *Ref.* | *Part Number* | *Qty.* | *Description* |
|---|---|---|---|
| 1 | 325-4 | 5 | Screw-HH |
| 2 | 106-8939 | 1 | Stop-Steering |
| 3 | 108-1252-01 | 1 | Arm-Steering |
| 4 | 106-8937 | 1 | Cable Guide ASM |
| 5 | 322-1 | 2 | Screw-HH |
| 6 | 32136-9 | 1 | Nut-Hex, Slotted |
| 7 | 107-7597 | 1 | Washer-Plain |
| 8 | 107-7589 | 2 | Cone-Bearing (W/ Seal) |
| 9 | 107-7590 | 2 | Cup-Bearing |
| 10 | 3272-37 | 1 | Pin-Cotter |
| 11 | 107-7595-0P | 1 | Spindle-Steer |

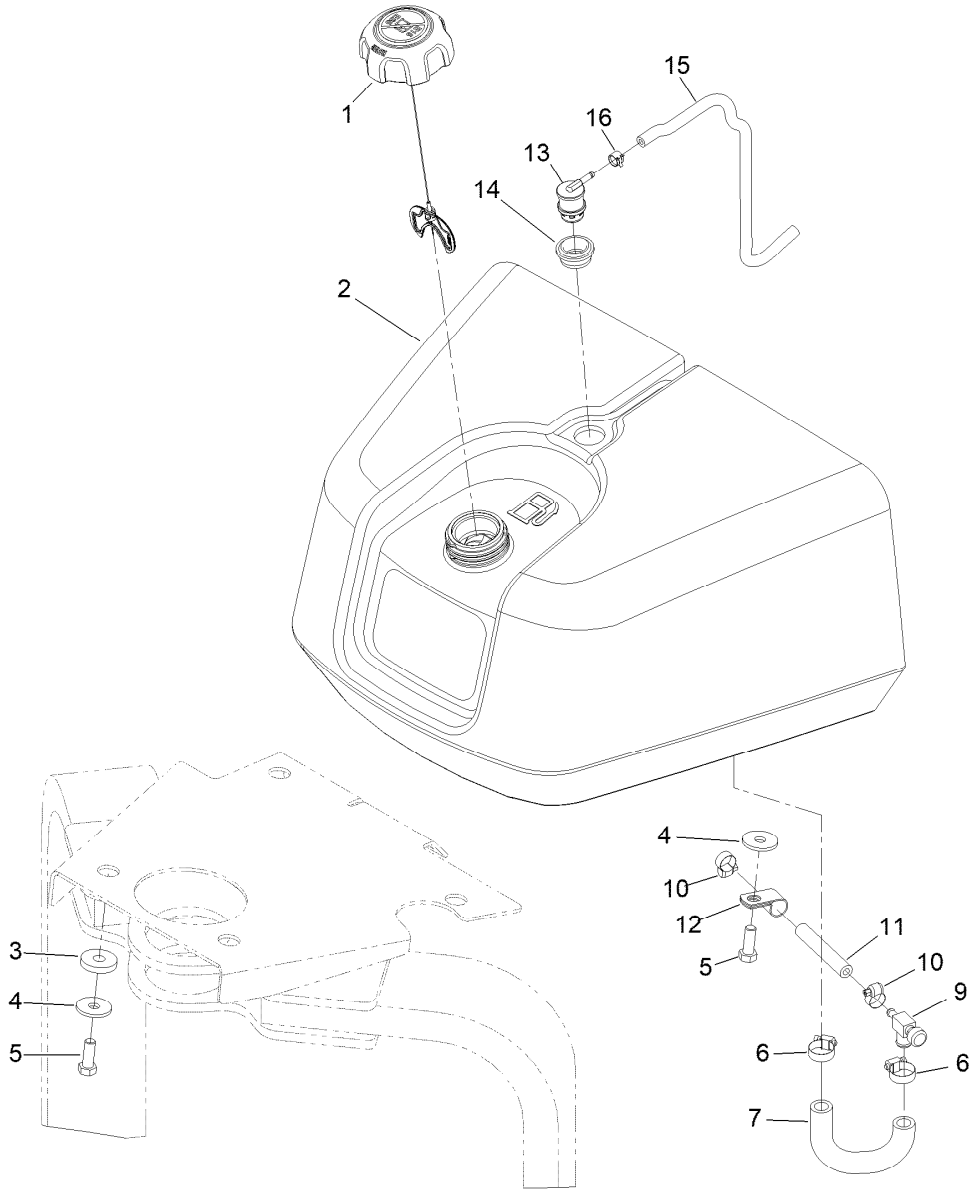


# Fuel Tank Assembly

| Ref. | Part Number | Qty. | Description |
|---|---|---|---|
| 1 | 137-4127 | 1 | Cap-Fuel |
| 2 | 115-5387 | 1 | Tank-Fuel |
| 3 | 240-11 | 4 | Bushing-Flange |
| 4 | 63-8410 | 4 | Washer |
| 5 | 323-6 | 4 | Screw-HH |
| 6 | 2412-36 | 2 | Clamp-Hose |
| 7 | 108-6818 | 1 | Hose-Fuel, Molded |
| 9 | 83-1390 | 1 | Valve-Shut-Off, Fuel |
| 10 | 2412-108 | 1 | Clamp-Worm |
| 11 | 114-3765 | 1 | Hose-Fuel |
| 12 | 2412-41 | 1 | Clamp-R |
| 13 | 114-0285 | 1 | Valve-Rollover |
| 14 | 114-0284 | 1 | Grommet |
| 15 | 115-4735 | 1 | Hose-Fuel |
| 16 | 2412-146 | 1 | Clamp-Hose |

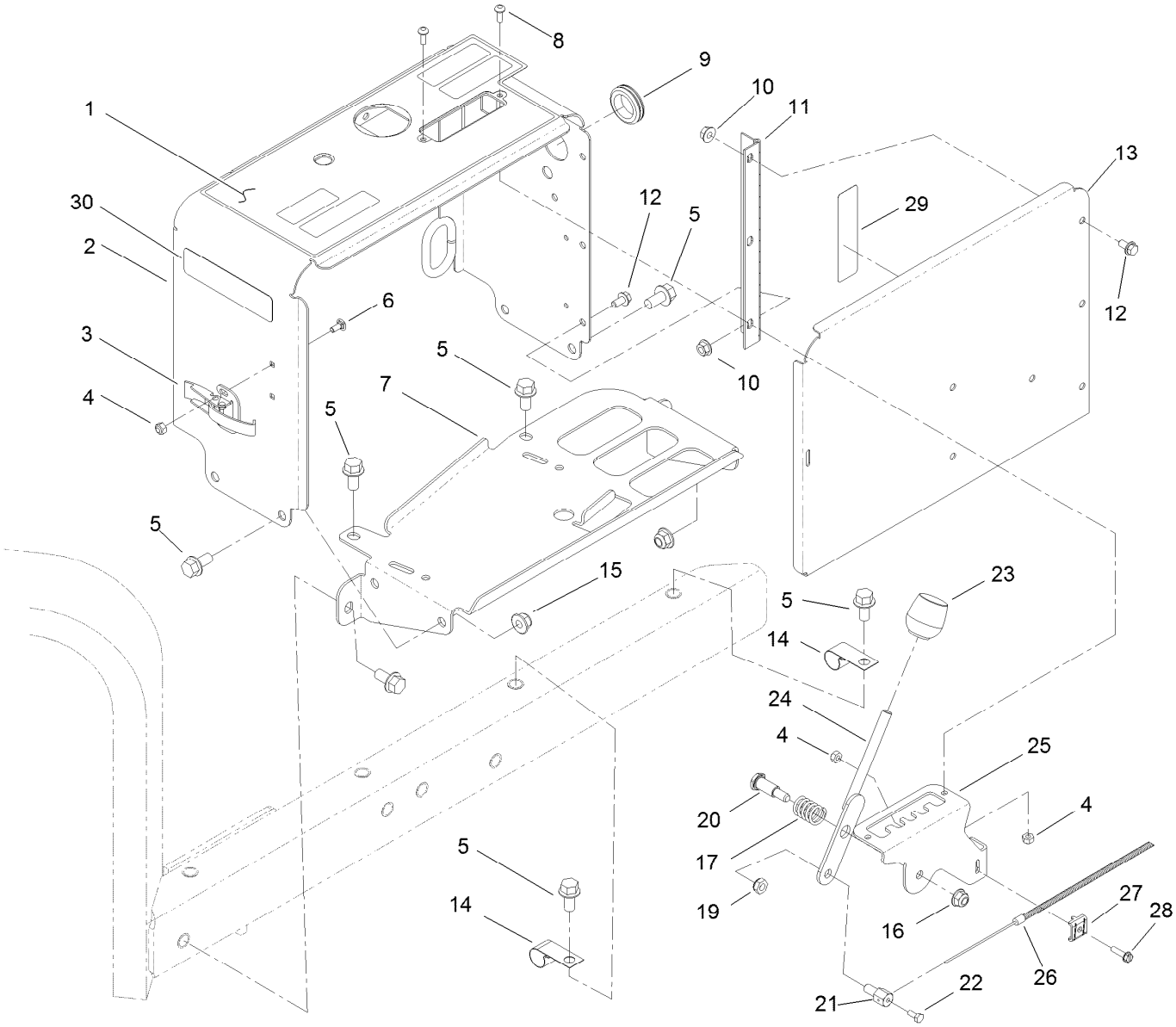


# Console Assembly

| Ref. | Part Number | Qty. | Description |
|---|---|---|---|
| 1 | 106-8854 | 1 | Decal-Console, Main |
| 2 | 105-1175-01 | 1 | Console |
| 3 | 249-21 | 1 | Clamp-Slotted |
| 4 | 3296-2 | 6 | Nut-Lock, NI |
| 5 | 3234-1 | 10 | Screw-HHF |
| 6 | 104-1450 | 2 | Bolt-CARR |
| 7 | 105-1182-01 | 1 | Base-Console |
| 8 | 3250-12 | 3 | Screw-PPH |
| 9 | 240-5 | 1 | Grommet |
| 10 | 32128-33 | 6 | Nut-HF |
| 11 | 106-8908 | 1 | Hinge-Console |
| 12 | 3234-13 | 6 | Screw-HHF |
| 13 | 105-1171-01 | 1 | Cover-Console |
| 14 | 2412-150 | 2 | Clip-J |
| 15 | 104-8301 | 4 | Nut-HF, NI |

| Ref. | Part Number | Qty. | Description |
|---|---|---|---|
| 16 | 104-8300 | 1 | Nut-HF, NI |
| 17 | 20-6110 | 1 | Spring-Compression |
| 19 | 3296-20 | 1 | Nut-Lock, NI |
| 20 | 63-2650 | 1 | Screw-Shoulder |
| 21 | 98-9311 | 1 | Swivel-Throttle |
| 22 | 25-8640 | 1 | Screw-HH |
| 23 | 233-37 | 1 | Knob |
| 24 | 105-1167 | 1 | Spacing Lever ASM |
| 25 | 105-1166-03 | 1 | Bracket-Lever, Spacer |
| 26 | 105-1062 | 1 | Cable-Control, Spacing |
| 27 | 81-1690 | 1 | Clamp-Cable |
| 28 | 32105-13 | 1 | Screw-HWH |
| 29 | 107-7555 | 1 | Decal-Block, Fuse |
| 30 | 133-8062 | 1 | Decal-Spark Arrestor |

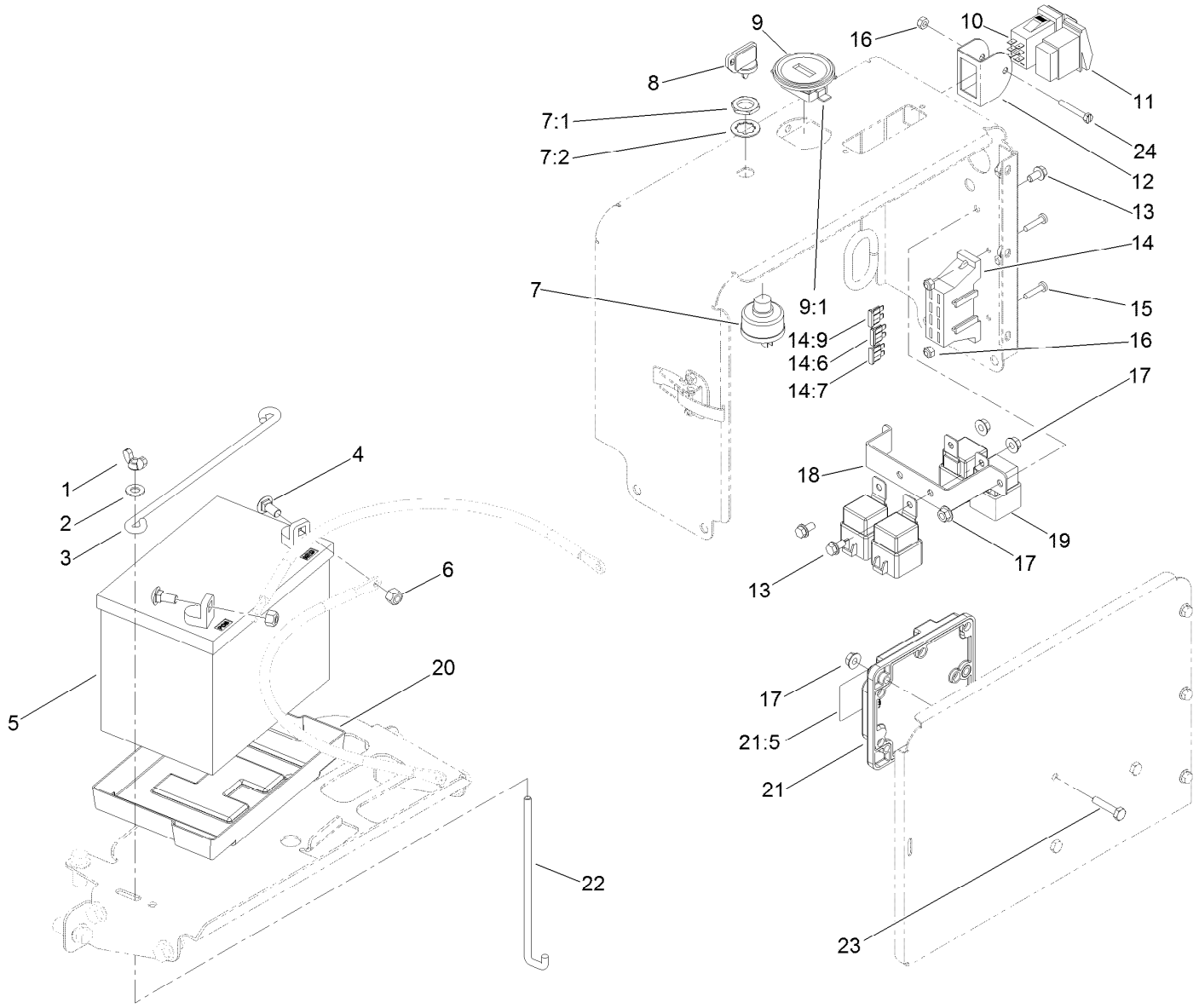


# Console Electronics Assembly

| Ref. | Part Number | Qty. | Description |
|---|---|---|---|
| 1 | 32103-22 | 2 | Nut-Wing |
| 2 | 3256-23 | 2 | Washer-Plain |
| 3 | 100-6434 | 1 | Rod-Hold Down, Battery |
| 4 | 3230-1 | 2 | Bolt-CARR |
| 5 | 99-7421 | 1 | Battery- Wet, 12V, 300 CCA |
| 6 | 104-8300 | 2 | Nut-HF, NI |
| 7 | 83-0020 | 1 | Switch-Ignition |
| 7:1 | 218-461 | 1 | Nut-HH |
| 7:2 | 3254-5 | 1 | Washer-Lock |
| 8 | 63-8360 | 2 | Key-Ignition |
| 9 | 104-7427 | 1 | Inductive Hourmeter ASM |
| 9:1 | 104-4234 | 1 | Clip-Mounting |
| 10 | 106-8920 | 1 | Switch-Paddle, On-None-On |
| 11 | 106-2027 | 1 | Switch-Intermittent |
| 12 | 105-1158 | 1 | Guard-Switch |

| Ref. | Part Number | Qty. | Description |
|---|---|---|---|
| 13 | 3234-13 | 3 | Screw-HHF |
| 14 | 122-1507 | 1 | Harness-Wire |
| 14:6 | 218-578 | 2 | Fuse-Blade, 10 Amp |
| 14:7 | 94-6710 | 1 | Fuse-2 Amp |
| 14:9 | 109101 | 1 | Fuse-Blade, 20 Amp |
| 15 | 3250-27 | 2 | Screw-PPH |
| 16 | 3296-2 | 3 | Nut-Lock, NI |
| 17 | 32128-33 | 6 | Nut-HF |
| 18 | 107-7530-0P | 1 | Bracket-Relay |
| 19 | 99-7430 | 4 | Relay-Mini |
| 20 | 106948 | 1 | Tray-Battery |
| 21 | 106-8831 | 1 | Module-Control, Aerator |
| 21:5 | 106-8835 | 1 | Decal-Module, Aerator |
| 22 | 100-6435 | 2 | Post-Battery |
| 23 | 321-8 | 3 | Screw-HH |
| 24 | 32105-1 | 1 | Screw-SHH |

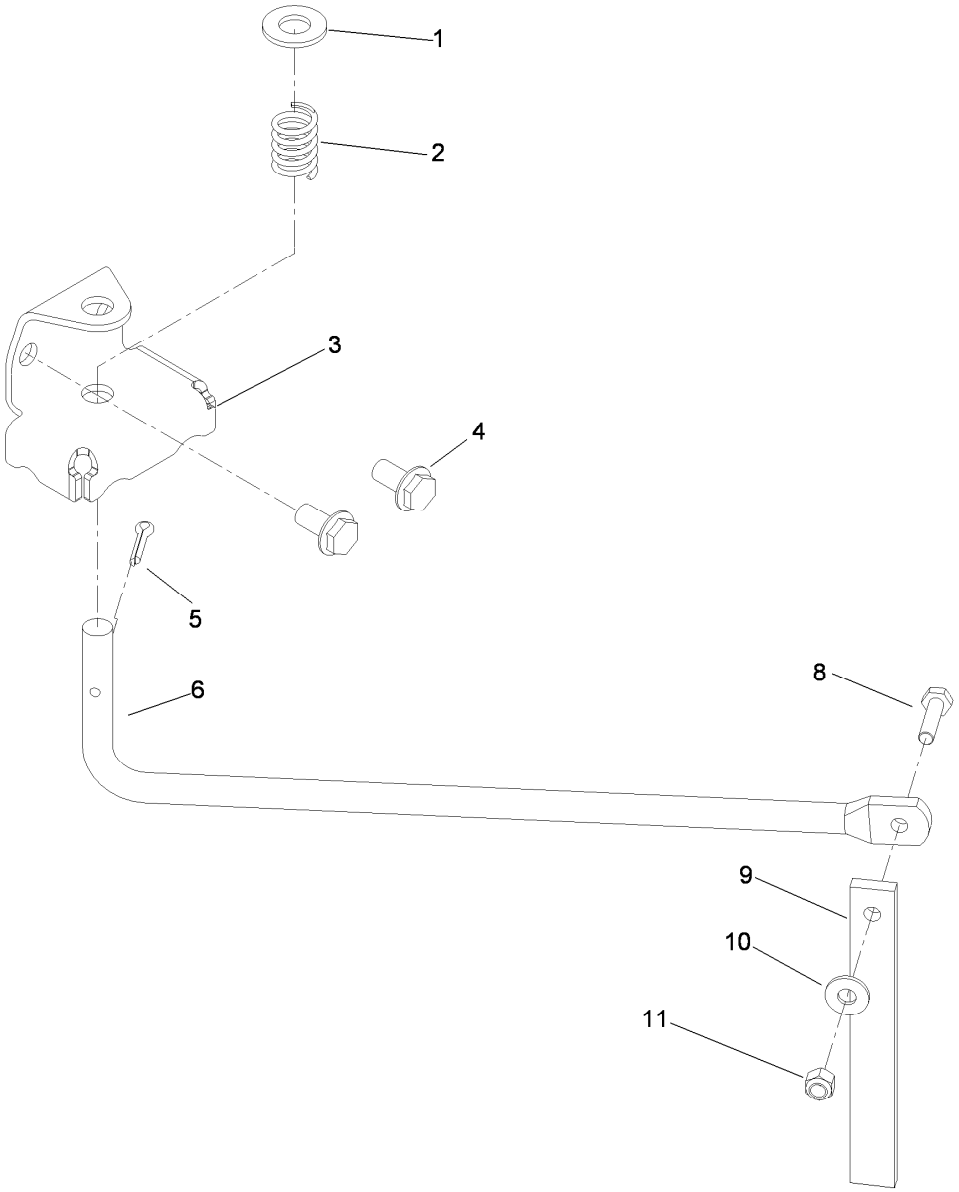


# Line Marker Assembly

| Ref. | Part Number | Qty. | Description |
|---|---|---|---|
| 1 | 3256-26 | 2 | Washer-Flat |
| 2 | 20-6110 | 2 | Spring-Compression |
| 3 | 105-1178-01 | 2 | Bracket-Marker |
| 4 | 3234-1 | 4 | Screw-HHF |
| 5 | 3272-31 | 2 | Pin-Cotter |
| 6 | 105-1179 | 2 | Rod-Marker |
| 8 | 321-6 | 2 | Screw-HH |
| 9 | 59-9460 | 2 | Guide |
| 10 | 3256-2 | 2 | Washer-Flat |
| 11 | 3296-42 | 2 | Nut-Lock, NI |

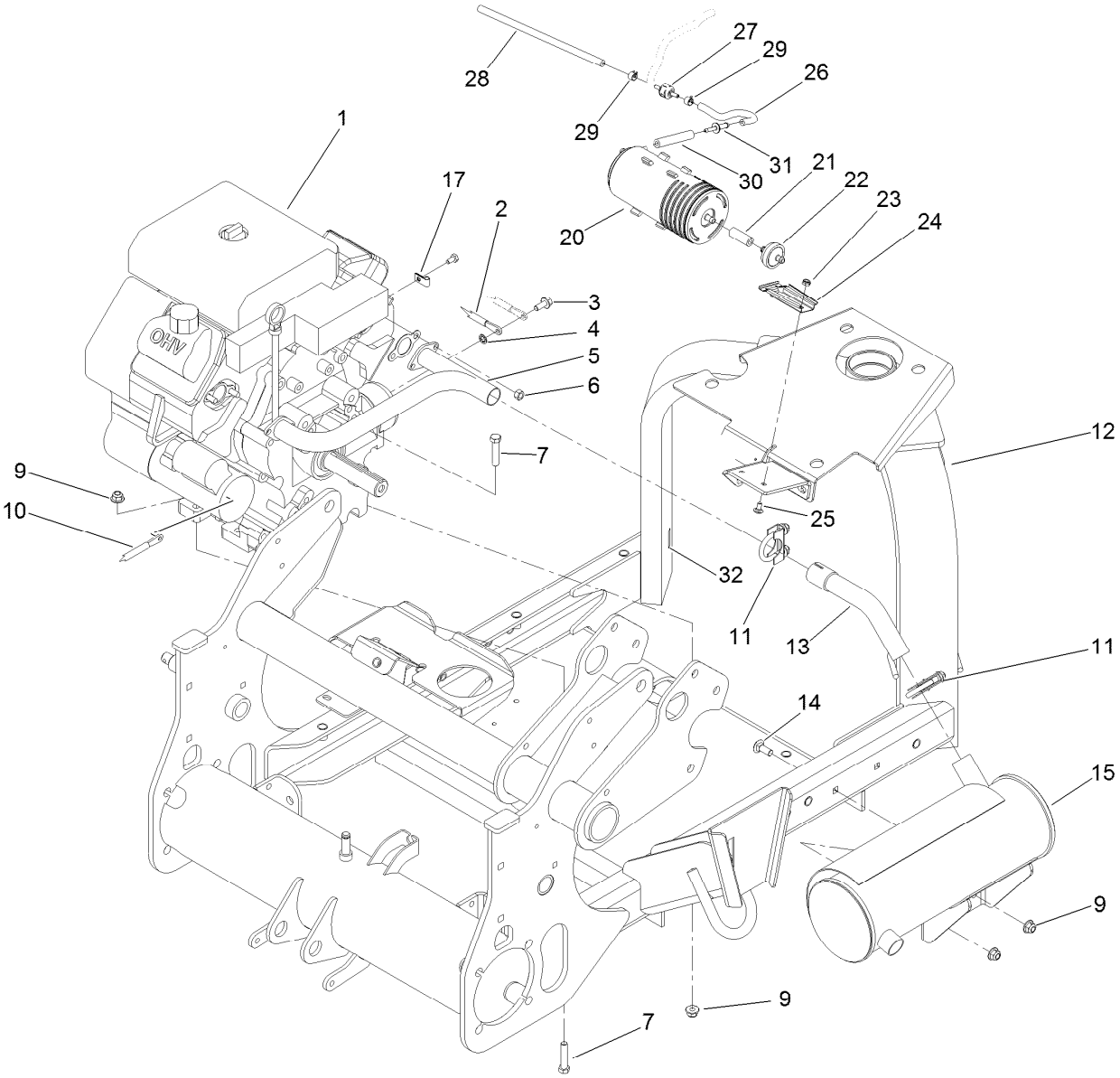


# Engine and Muffler Assembly

| Ref. | Part Number | Qty. | Description |
|---|---|---|---|
| 1 | 161-9175 | 1 | Engine-Kohler Ch680-3165 |
| 2 | 106-8946 | 1 | Cable-Battery, Negative |
| 3 | 33104-020 | 1 | Screw-HHF |
| 4 | 3254-2 | 1 | Washer-Lock, Internal |
| 5 | 106-8858 | 1 | Manifold-Exhaust |
| 6 | 33014-00 | 4 | Nut-Hex |
| 7 | 323-9 | 4 | Screw-HH |
| 9 | 104-8301 | 6 | Nut-HF, NI |
| 10 | 106-8945 | 1 | Cable-Battery, Positive |
| 11 | 104-4090 | 2 | Clamp-Muffler |
| 12 | 106-8910 | 1 | Front Frame ASM |
| 13 | 106-8857 | 1 | Elbow-Exhaust |
| 14 | 3231-2 | 2 | Bolt-CARR |
| 15 | 106-8859 | 1 | Muffler-Exhaust |

| Ref. | Part Number | Qty. | Description |
|---|---|---|---|
| 17 | 2412-72 | 1 | Clip-Closed, Insulated |
| 20 | 117-1221 | 1 | Canister-Carbon, 800Cc |
| 21 | 99-9415 | 1 | Hose-Fuel |
| 22 | 115-7854 | 1 | Filter-Fuel, Inline |
| 23 | 3296-56 | 2 | Nut-Lock, NI |
| 24 | 114-0292 | 1 | Bracket-Canister, Carbon |
| 25 | 3229-10 | 2 | Screw-CARR |
| 26 | 115-4736 | 1 | Hose-Fuel |
| 27 | 133-8499 | 1 | Valve-Check, Vacuum |
| 28 | 51-3217 | 1 | Hose-Fuel |
| 29 | 2412-146 | 2 | Clamp-Hose |
| 30 | 114-3765 | 1 | Hose-Fuel |
| 31 | 121-0743 | 1 | Adapter-Orifice |
| 32 | 133-8095 | 1 | Decal-CE |

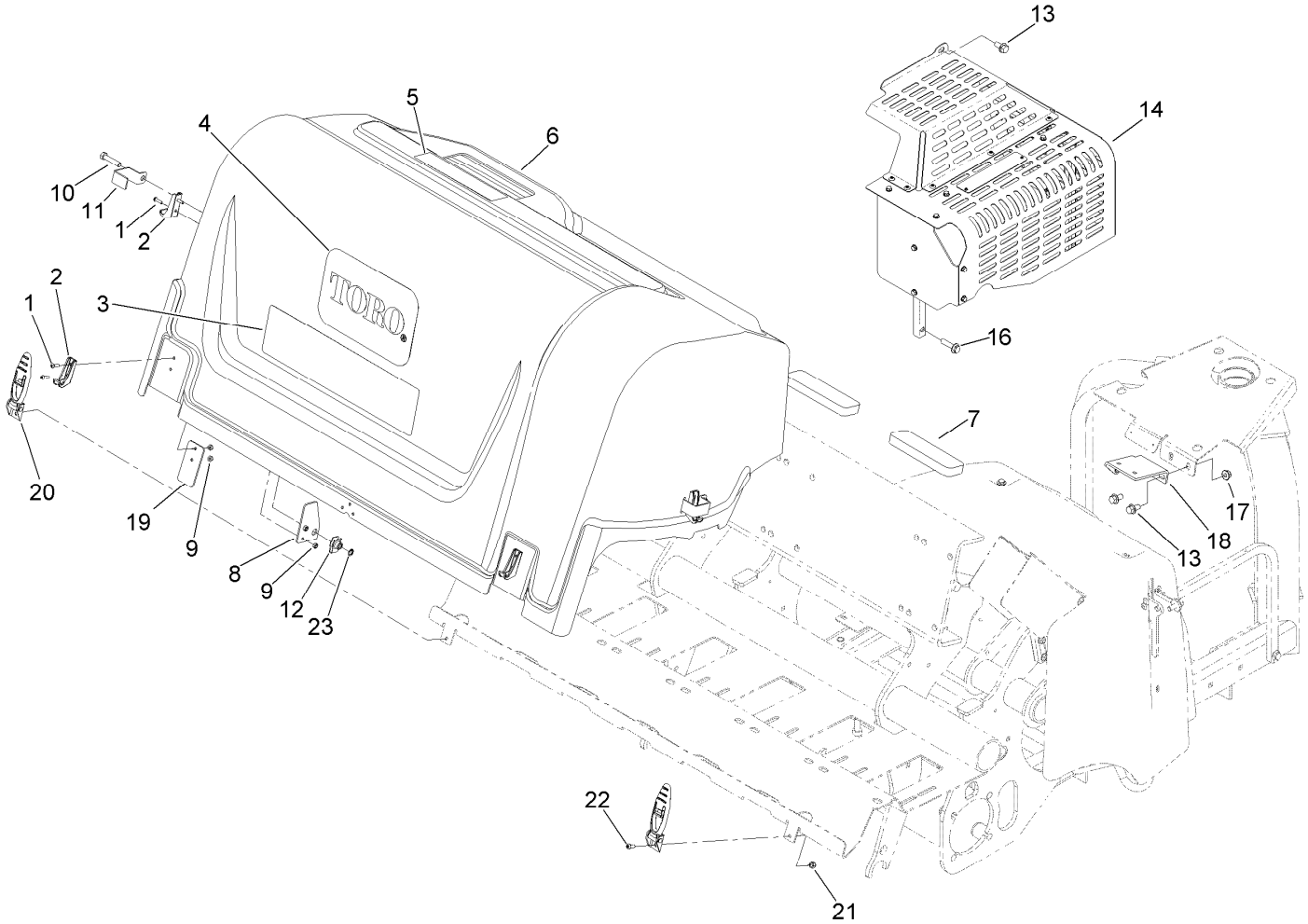


# Rear Hood and Muffler Shield Assembly

| Ref. | Part Number | Qty. | Description |
|---|---|---|---|
| 1 | 104-2408 | 8 | Screw-HSBH |
| 2 | 103-2897 | 4 | Latch-Catch |
| 3 | 106-8852 | 1 | Decal |
| 4 | 67-7310 | 1 | Decal |
| 5 | 106-8856 | 1 | Decal - Tine Depth, CE |
| 6 | 110-1494 | 1 | Hood-Rear |
| 7 | 107-7507 | 3 | Pad-Foam |
| 8 | 110-4672 | 2 | Plate-Reinforcement |
| 9 | 3296-2 | 8 | Nut-Lock, NI |
| 10 | 323-53 | 2 | Screw-HH |
| 11 | 110-4673 | 2 | Lock-Latch, CE |

| Ref. | Part Number | Qty. | Description |
|---|---|---|---|
| 12 | 105-4886 | 2 | Nut-Tinnerman |
| 13 | 3234-1 | 3 | Screw-HHF |
| 14 | 107-7546 | 1 | Shield ASM |
| 16 | 3234-18 | 2 | Screw-HHF |
| 17 | 104-8301 | 2 | Nut-HF, NI |
| 18 | 115-4734 | 1 | Canister Bracket ASM |
| 19 | 110-1499 | 2 | Plate-Reinforcement |
| 20 | 103-2898 | 4 | Latch-Rubber |
| 21 | 3296-42 | 4 | Nut-Lock, NI |
| 22 | 3274-31 | 4 | Screw-HSBH |
| 23 | 32151-72 | 2 | Ring-Retaining |

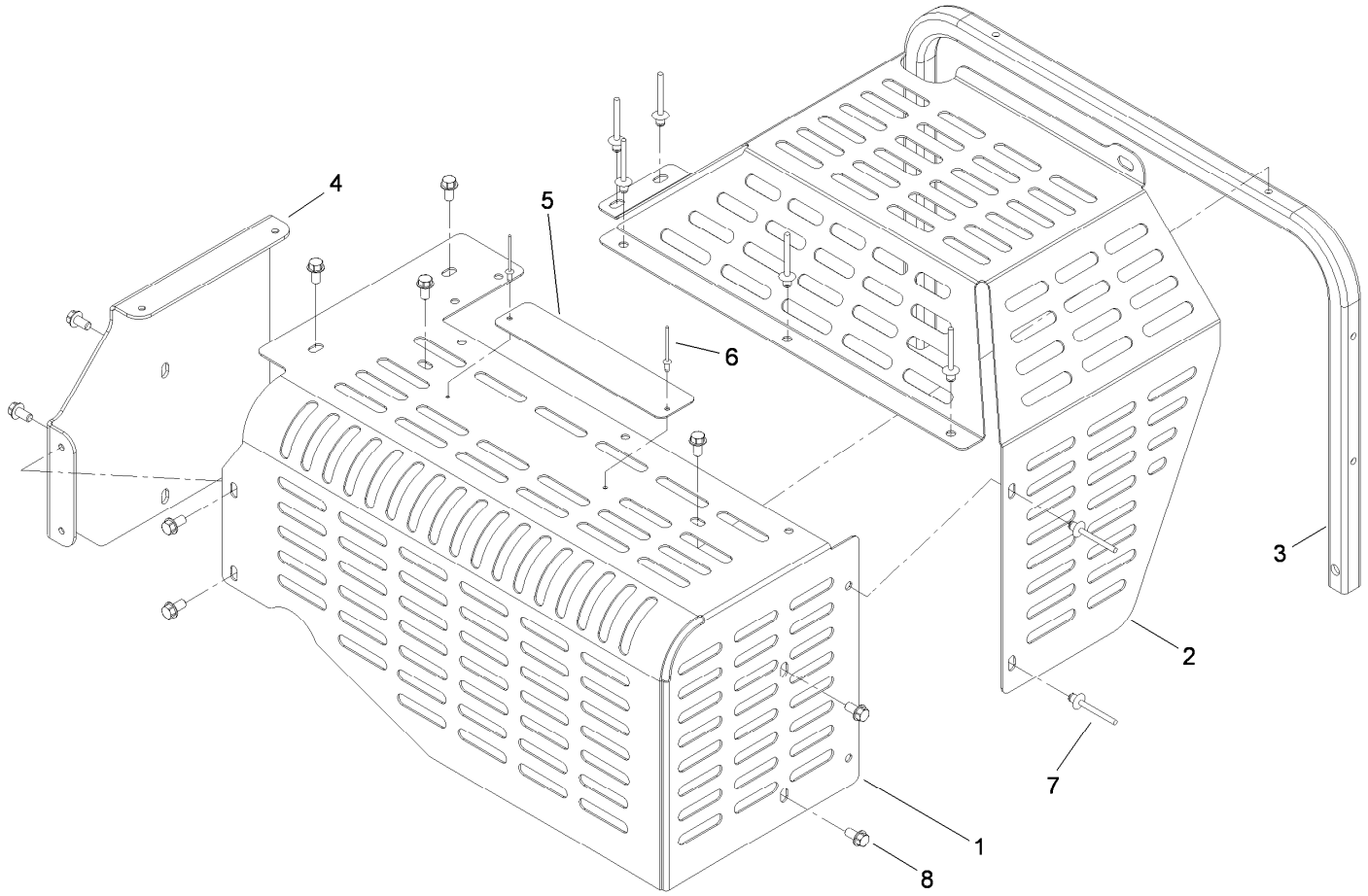


# Shield Assembly No. 107-7546

| *Ref.* | *Part Number* | *Qty.* | *Description* |
|---|---|---|---|
| 1 | 106-8903-01 | 1 | Shield-Muffler |
| 2 | 106-8904-03 | 1 | Shield-Clutch |
| 3 | 106-8848-01 | 1 | Tube-Shield, Muffler |
| 4 | 106-8906-01 | 1 | Bracket-Shield, Muffler |
| 5 | 140-8962 | 1 | Artwork-Plate, Warning, Procore |
| 6 | 3269-32 | 2 | Rivet-Pop |
| 7 | 93-8744 | 7 | Rivet-Blind |
| 8 | 32144-4 | 10 | Screw-HWH |

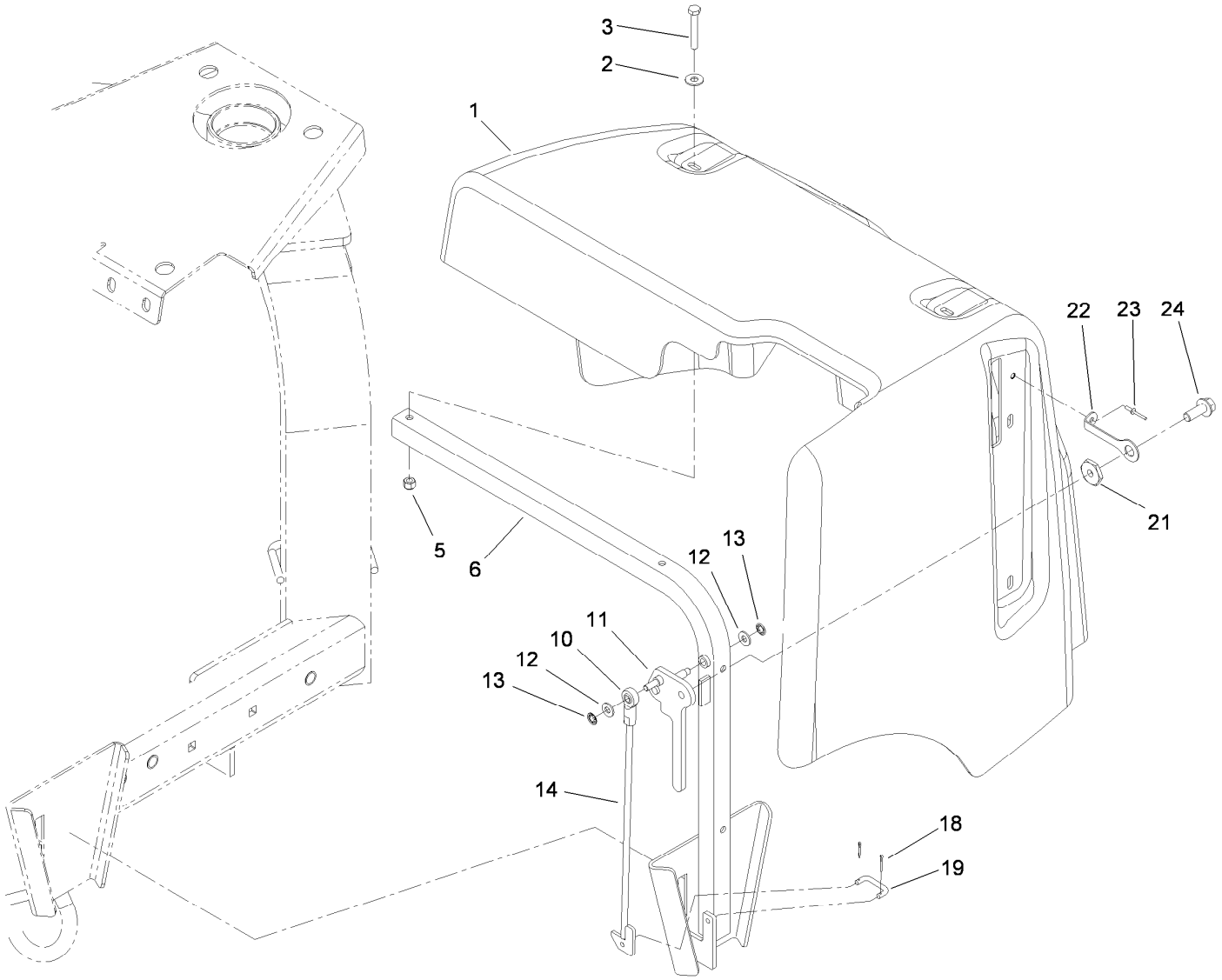


# Jackshaft Hood Assembly

| Ref. | Part Number | Qty. | Description |
|---|---|---|---|
| 1 | 106-8901 | 1 | Hood-Front |
| 2 | 100-2400 | 4 | Washer |
| 3 | 321-10 | 4 | Screw-HH |
| 5 | 3296-42 | 4 | Nut-Lock, NI |
| 6 | 106-8846-03 | 1 | Frame-Hood |
| 10 | 2411-41 | 1 | Rod End-Ball Joint |
| 11 | 115-4737-03 | 1 | Lever-Hood |
| 12 | 3256-22 | 2 | Washer-Flat |

| Ref. | Part Number | Qty. | Description |
|---|---|---|---|
| 13 | 104-8310 | 2 | Ring-Retaining |
| 14 | 106-8928 | 1 | Hook ASM |
| 18 | 3272-1 | 2 | Pin-Cotter |
| 19 | 69-9140 | 1 | Link-Lever, Valve |
| 21 | 117-8347 | 1 | Nut-Shoulder |
| 22 | 117-8339 | 1 | Lanyard-3 Inch |
| 23 | 3290-55 | 1 | Rivet-Pop |
| 24 | 3234-42 | 1 | Screw-HHF |

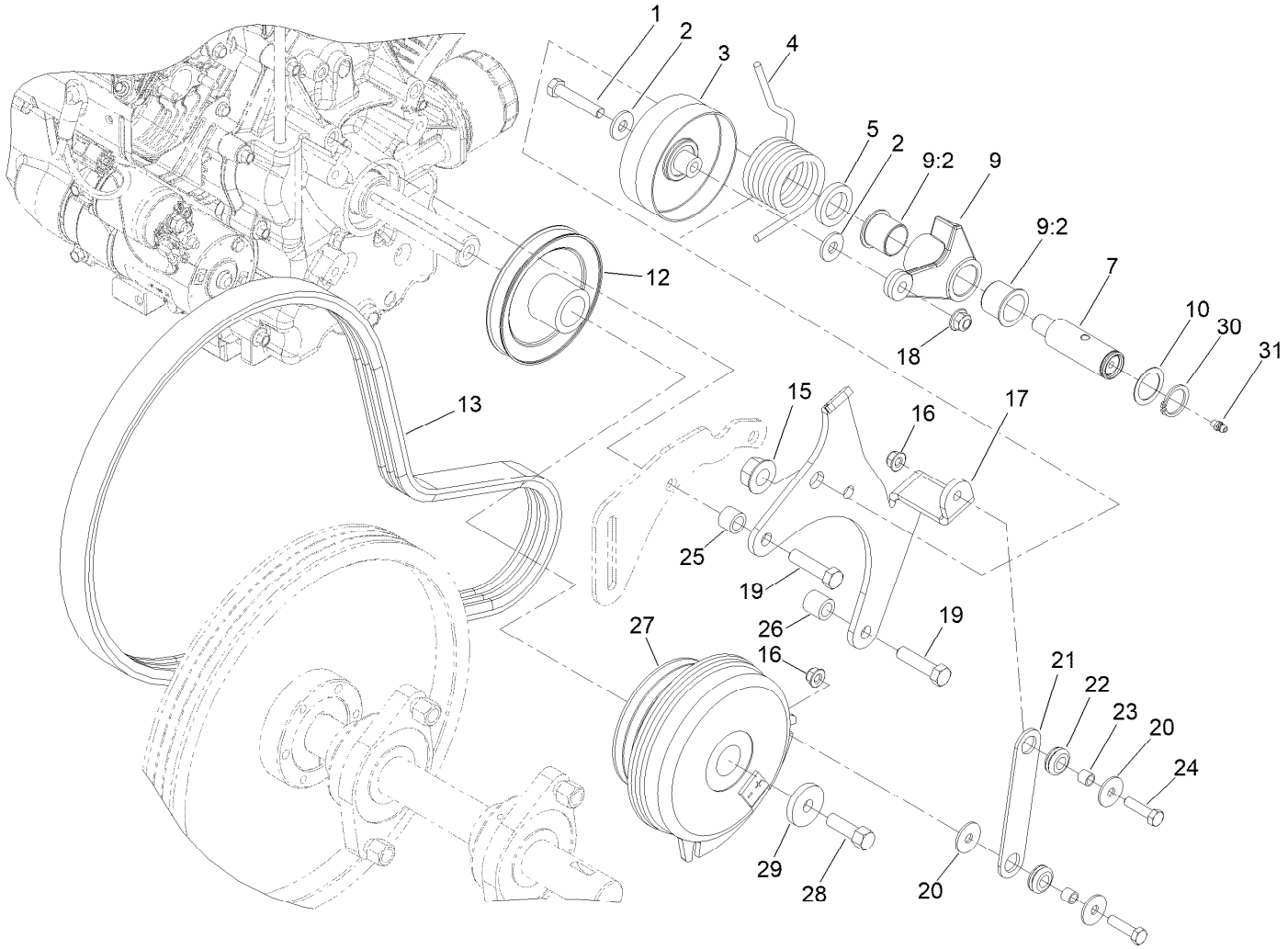


# Primary Belt Drive Assembly

| Ref. | Part Number | Qty. | Description |
|---|---|---|---|
| 1 | 323-10 | 1 | Screw-HH |
| 2 | 80-6990 | 2 | Washer-Hardened |
| 3 | 139-6031 | 1 | Pulley-Idler |
| 4 | 115-3488 | 1 | Spring-Torsion |
| 5 | 99-3625 | 1 | Spacer-Arm, Idler |
| 7 | 99-3624 | 1 | Shaft-Pivot, Idler |
| 9 | 137-1653 | 1 | Idler Arm ASM |
| 9:2 | 126-1963 | 2 | Bushing-Pivot |
| 10 | 74-1810 | 1 | Washer |
| 12 | 107-3379 | 1 | Pulley |
| 13 | 105-0989 | 1 | Belt-3V |
| 15 | 32128-54 | 1 | Nut-HF |
| 16 | 104-8300 | 2 | Nut-HF, NI |
| 17 | 115-4724-03 | 1 | Bracket-Mounting, Idler |

| Ref. | Part Number | Qty. | Description |
|---|---|---|---|
| 18 | 104-8301 | 1 | Nut-HF, NI |
| 19 | 324-7 | 3 | Screw-HH |
| 20 | 3256-82 | 3 | Washer-Flat |
| 21 | 107-3382 | 1 | Strap-Clutch |
| 22 | 1-633630 | 2 | Grommet |
| 23 | 1-633545 | 2 | Spacer |
| 24 | 322-6 | 2 | Screw-HH |
| 25 | 68-5440 | 2 | Spacer |
| 26 | 105-0985 | 1 | Spacer-Support, Idler |
| 27 | 108-2126 | 1 | Clutch-Electric |
| 28 | 26-0671 | 1 | Screw-HH |
| 29 | 1-543610 | 1 | Washer-Flat |
| 30 | 32151-36 | 1 | Ring-Retaining |
| 31 | 302-5 | 1 | Fitting-Grease |

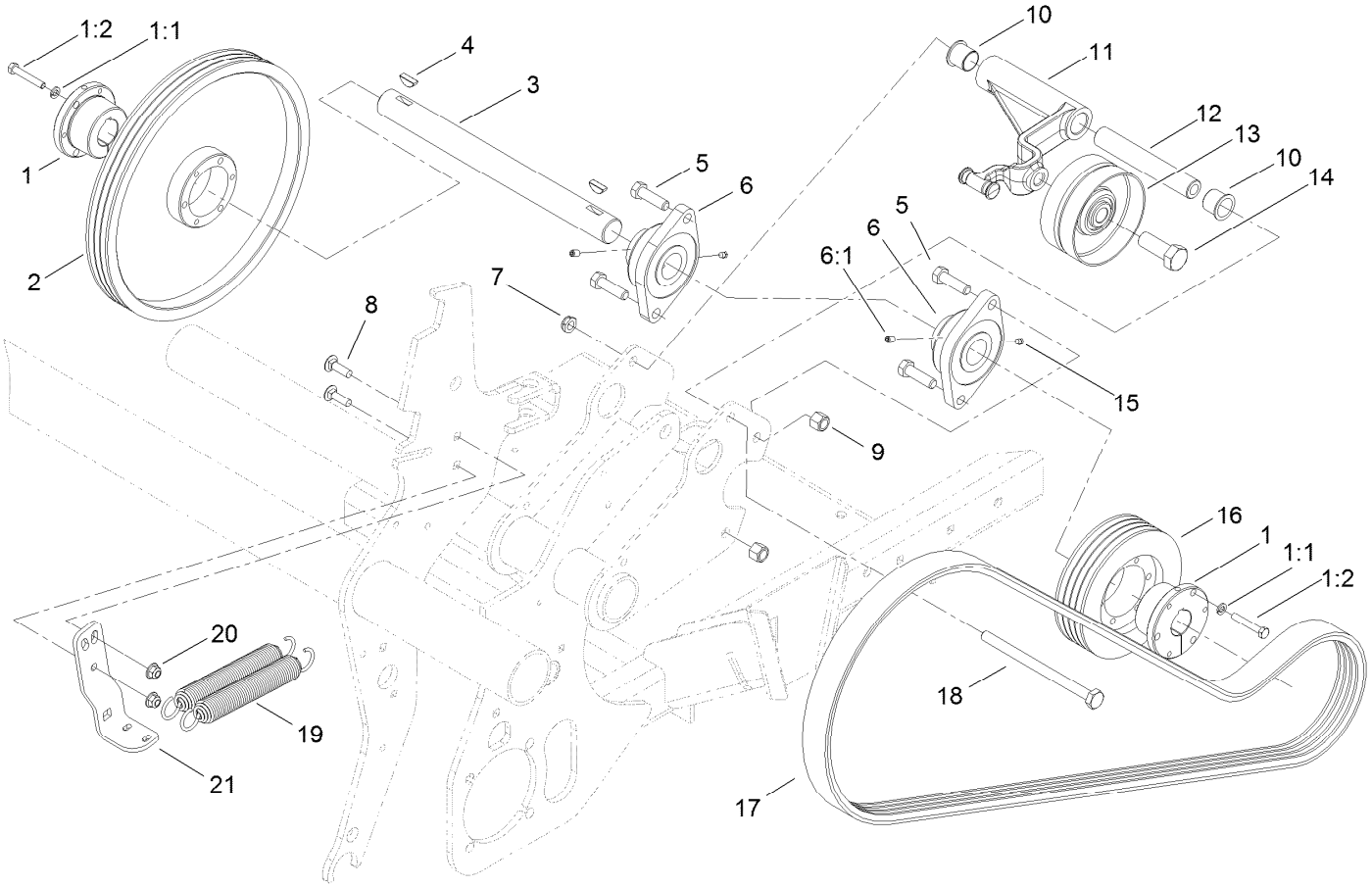


# Secondary Belt Drive Assembly

| Ref. | Part Number | Qty. | Description |
|---|---|---|---|
| 1 | 59-3790 | 2 | Bushing-Lock, Taper |
| 1:1 | 3253-4 | 3 | Washer-Lock |
| 1:2 | 120-6000 | 3 | Bolt-TAP, HH |
| 2 | 105-0977 | 1 | Pulley-3V |
| 3 | 105-0975 | 1 | Jackshaft |
| 4 | 3257-42 | 2 | Key-Woodruff |
| 5 | 325-7 | 4 | Screw-HH |
| 6 | 105-0962 | 2 | Bearing-Mount, Flange |
| 6:1 | 3246-17 | 1 | Setscrew-HSH |
| 7 | 3296-45 | 1 | Nut-Hex |
| 8 | 3231-25 | 2 | Bolt-CARR |
| 9 | 3296-23 | 4 | Nut-Lock, NI |

| Ref. | Part Number | Qty. | Description |
|---|---|---|---|
| 10 | 126-1963 | 2 | Bushing-Pivot |
| 11 | 105-1132-03 | 1 | Arm-Idler |
| 12 | 105-1172 | 1 | Tube-Pivot, Idler |
| 13 | 100-7631 | 1 | Pulley-Idler |
| 14 | 328-24 | 1 | Screw-HH |
| 15 | 302-59 | 2 | Plug-EXT Hex Spl |
| 16 | 105-0976 | 1 | Pulley-3V |
| 17 | 105-0991 | 1 | Belt-Banded, 4 Groove |
| 18 | 325-36 | 1 | Screw-HH |
| 19 | 106-8933 | 2 | Spring-Extension |
| 20 | 104-8301 | 2 | Nut-HF, NI |
| 21 | 105-1118-03 | 1 | Arm-Spring, Idler |

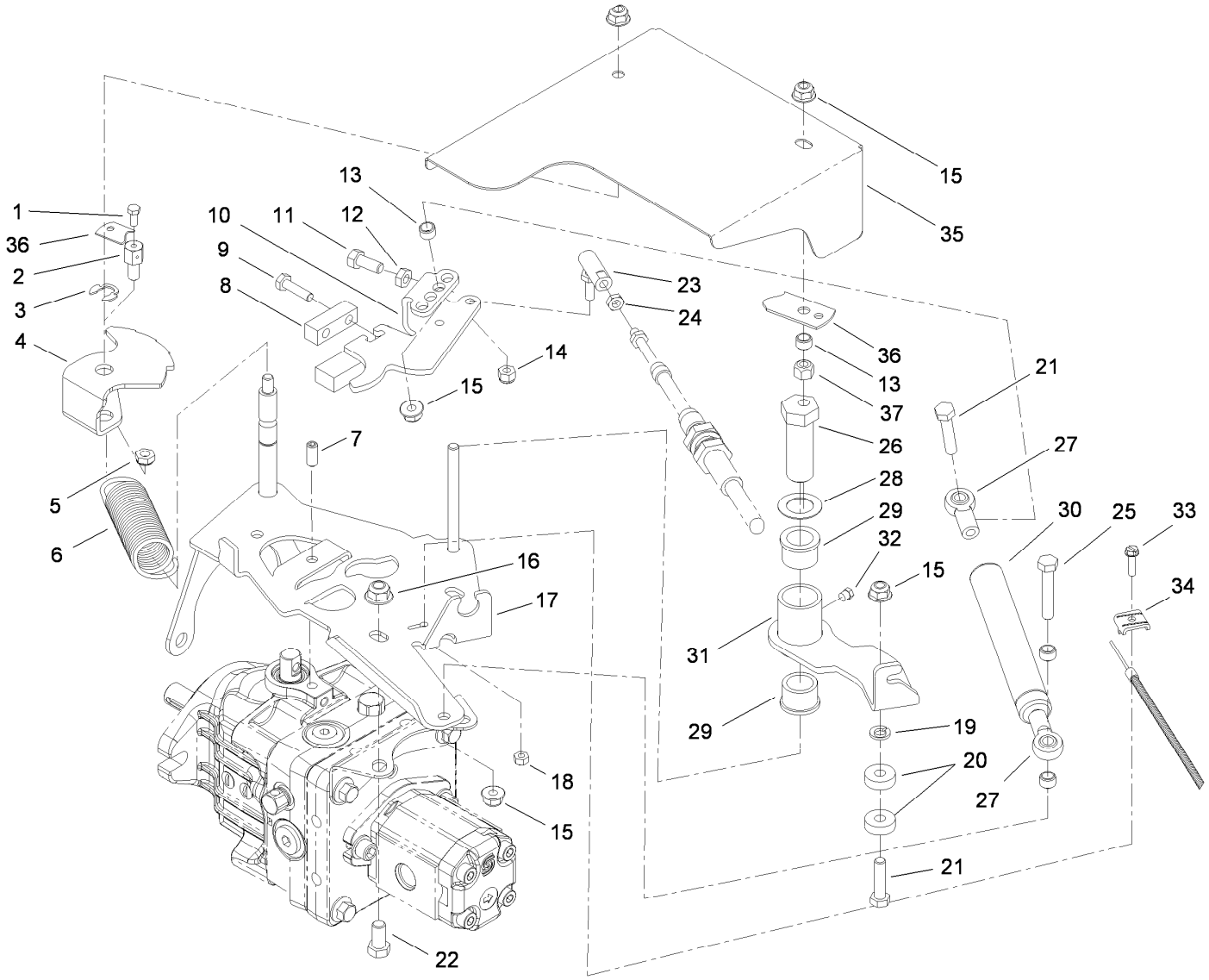


# Hydro Control Assembly

| Ref. | Part Number | Qty. | Description |
|---|---|---|---|
| 1 | 25-8640 | 1 | Screw-HH |
| 2 | 98-9311 | 1 | Swivel-Throttle |
| 3 | 32151-68 | 1 | Ring-Retaining |
| 4 | 105-1129-01 | 1 | Pivot-Selector, Speed |
| 5 | 3296-20 | 1 | Nut-Lock, NI |
| 6 | 115-4712 | 1 | Spring-Extension |
| 7 | 115-2819 | 1 | Screw-Set, HSH |
| 8 | 105-1109 | 1 | Clamp-Trunnion |
| 9 | 321-6 | 2 | Screw-HH |
| 10 | 105-1125-01 | 1 | Lever-Pump |
| 11 | 3210-3 | 1 | Screw-HH |
| 12 | 3220-2 | 1 | Nut-Jam |
| 13 | 92-3133 | 4 | Spacer-Lever, Traction |
| 14 | 3296-3 | 1 | Nut-Lock |
| 15 | 104-8300 | 5 | Nut-HF, NI |
| 16 | 104-8301 | 2 | Nut-HF, NI |
| 17 | 115-2809-01 | 1 | Bracket-Control |
| 18 | 3296-2 | 1 | Nut-Lock, NI |
| 19 | 3253-4 | 1 | Washer-Lock |

| Ref. | Part Number | Qty. | Description |
|---|---|---|---|
| 20 | 251-259 | 2 | Bearing-Ball |
| 21 | 322-7 | 2 | Screw-HH |
| 22 | 323-4 | 2 | Screw-HH |
| 23 | 2411-34 | 1 | Joint-Ball |
| 24 | 3220-1 | 1 | Nut-Jam |
| 25 | 322-9 | 1 | Screw-HH |
| 26 | 76-8640 | 1 | Stud-Traction |
| 27 | 104-8331 | 2 | End-Rod, Spherical |
| 28 | 3-6498 | 1 | Washer-Thrust |
| 29 | 256-113 | 2 | Bushing-Flange |
| 30 | 105-3249 | 1 | Damper |
| 31 | 105-1060-01 | 1 | Lever-Neutral |
| 32 | 302-59 | 1 | Plug-EXT Hex Spl |
| 33 | 32105-13 | 1 | Screw-HWH |
| 34 | 81-1690 | 1 | Clamp-Cable |
| 35 | 107-7578-01 | 1 | Shield-Hydrostat |
| 36 | 108-6836 | 1 | Strap-Traction |
| 37 | 3296-29 | 1 | Nut-Lock, NI |

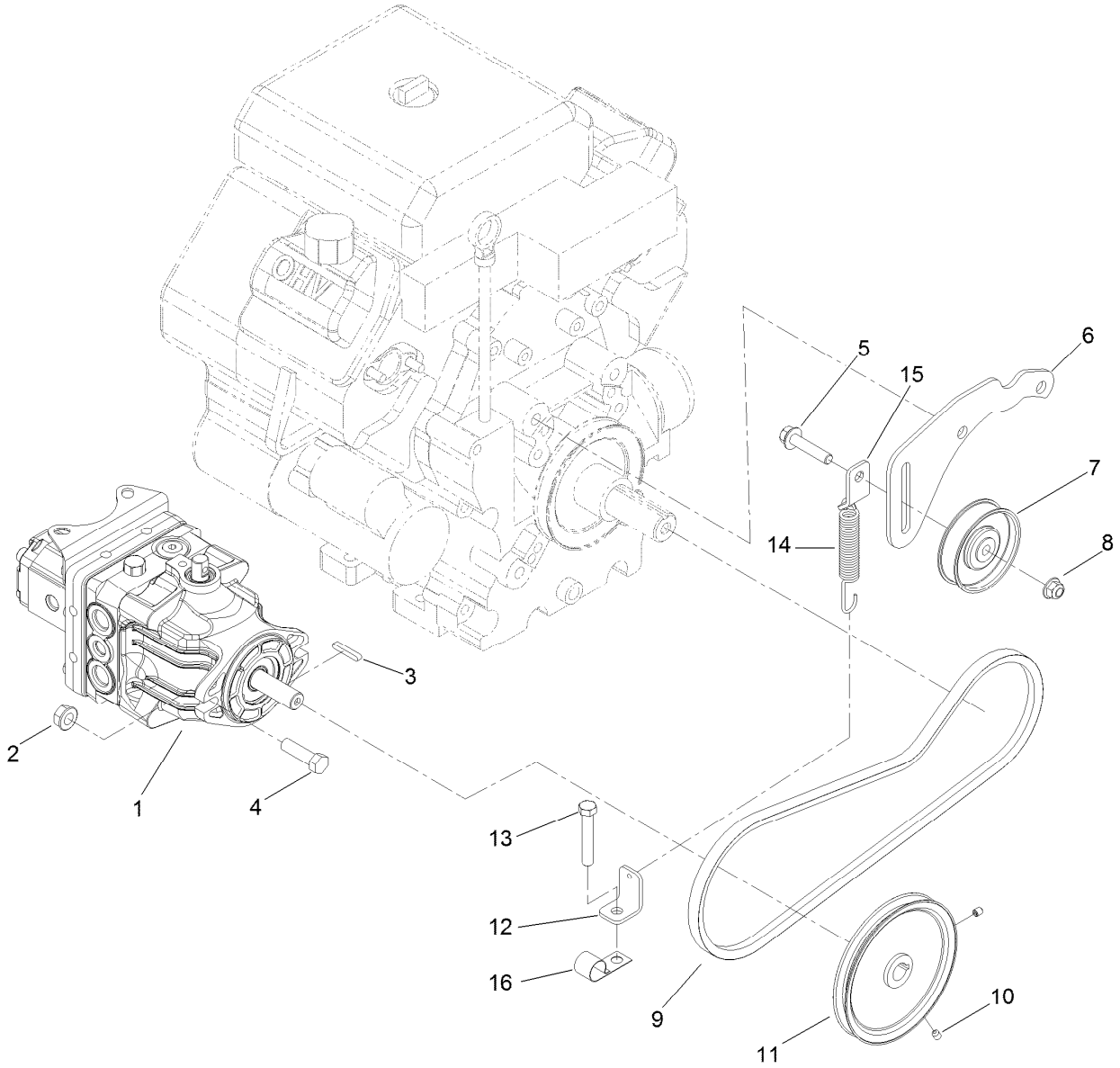


# Hydrostat Pump Assembly

| Ref. | Part Number | Qty. | Description |
|---|---|---|---|
| 1 | 140-8824 | 1 | Hydrostat And Pump ASM |
| 2 | 32128-37 | 2 | Nut-HF |
| 3 | 103-2739 | 1 | Key |
| 4 | 324-6 | 2 | Screw-HH |
| 5 | 3234-19 | 1 | Screw-HHF |
| 6 | 105-1085-03 | 1 | Support-Idler |
| 7 | 112426 | 1 | Pulley-Idler |
| 8 | 104-8301 | 1 | Nut-HF, NI |

| Ref. | Part Number | Qty. | Description |
|---|---|---|---|
| 9 | 107-7513 | 1 | V-Belt |
| 10 | 3245-7 | 2 | Screw-Set |
| 11 | 105-0988 | 1 | Pulley-Drive |
| 12 | 107-7583 | 1 | Bracket-L |
| 13 | 104-3396 | 1 | Screw-HH |
| 14 | 106-4502 | 1 | Spring-Scraper |
| 15 | 107-7588 | 1 | Bracket-Spring |
| 16 | 2412-150 | 1 | Clip-J |

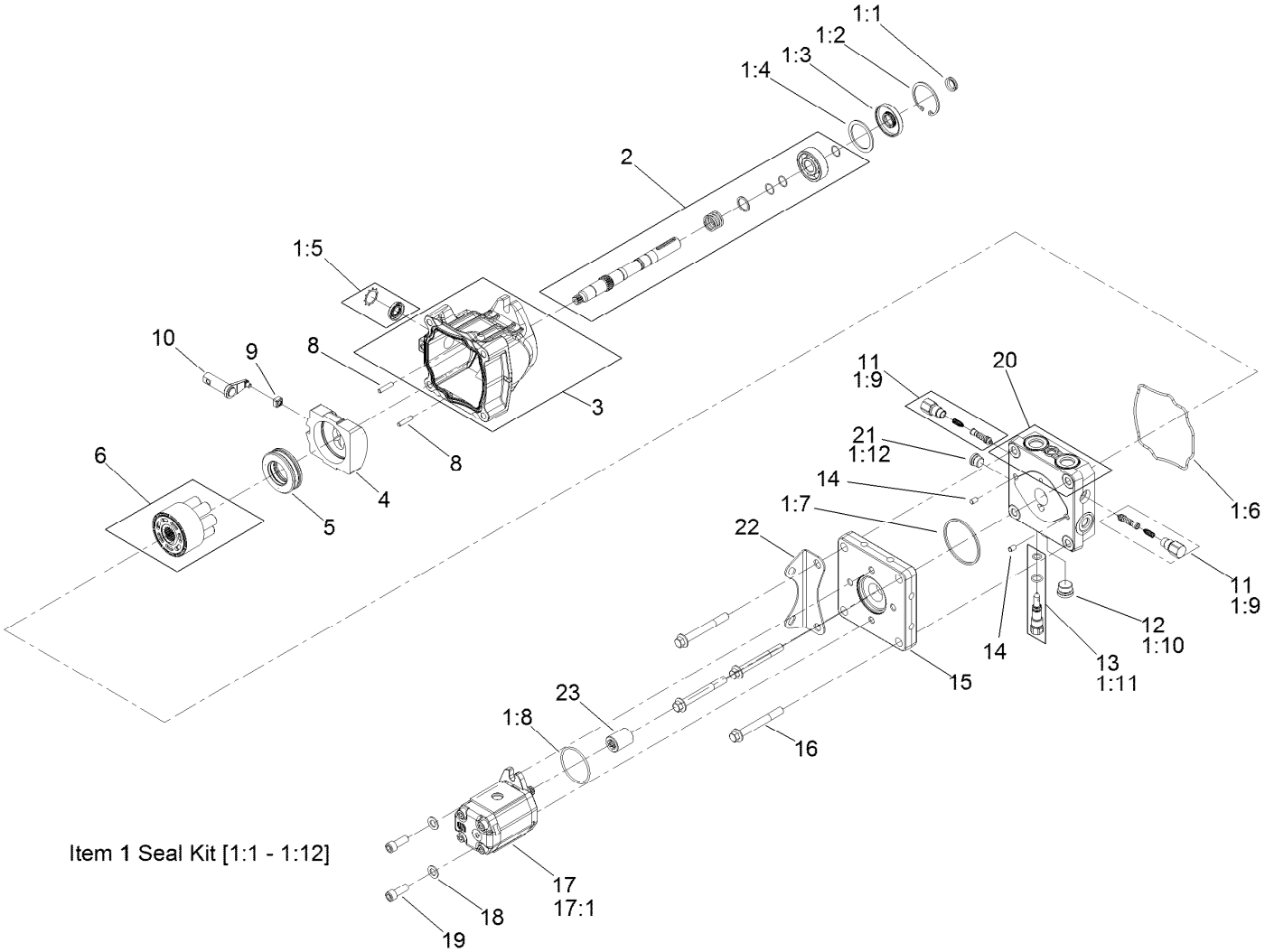


# Hydrostat and Puimp Assembly No. 140-8824

| Ref. | Part Number | Qty. | Description |
|---|---|---|---|
| 1 | 108-2110 | 1 | Overhaul Seal Kit |
| 1:1 | | 1 | V-Ring ● |
| 1:2 | | 1 | Ring-Retaining ● |
| 1:3 | | 1 | Seal-Shaft ● |
| 1:4 | | 1 | Spacer ● |
| 1:5 | | 1 | Seal-Trunnion ● |
| 1:6 | | 1 | Gasket-Housing ● |
| 1:7 | | 1 | O-Ring, Sq Section ● |
| 1:8 | | 1 | O-Ring, Pump ● |
| 1:9 | | 2 | O-Ring, Shock Valve ● |
| 1:10 | | 1 | O-Ring, Plug ● |
| 1:11 | | 1 | O-Ring, Bypass ● |
| 1:12 | | 1 | O-Ring, Plug ● |
| 2 | | 1 | Pump Shaft Kit ● |
| 3 | | 1 | Housing ● |
| 4 | | 1 | Swashplate-Variable ● |
| 5 | | 1 | Thrust Bearing ASM ● |
| 6 | 120-1092 | 1 | Cylinder Block Kit |

| Ref. | Part Number | Qty. | Description |
|---|---|---|---|
| 8 | | 2 | Pin ● |
| 9 | | 1 | Slot-Guide ● |
| 10 | | 1 | Arm-Trunnion ● |
| 11 | 108-2109 | 2 | Shock Valve Kit |
| 12 | | 1 | Plug ● |
| 13 | 106-8759 | 1 | Bypass Valve Kit |
| 14 | | 2 | Pin ● |
| 15 | | 1 | Plate-Adapter ● |
| 16 | | 4 | Screw-Hex, Flange Head ● |
| 17 | 108-2113 | 1 | Pump-HYD |
| 17:1 | 106-6362 | 1 | Seal Kit |
| 18 | | 2 | Washer ● |
| 19 | | 2 | Capscrew-SHH ● |
| 20 | | 1 | Endcap Kit ● |
| 21 | | 1 | Plug ● |
| 22 | | 1 | Bracket-Mount ● |
| 23 | 108-6843 | 1 | Coupling |

● Not serviced separately

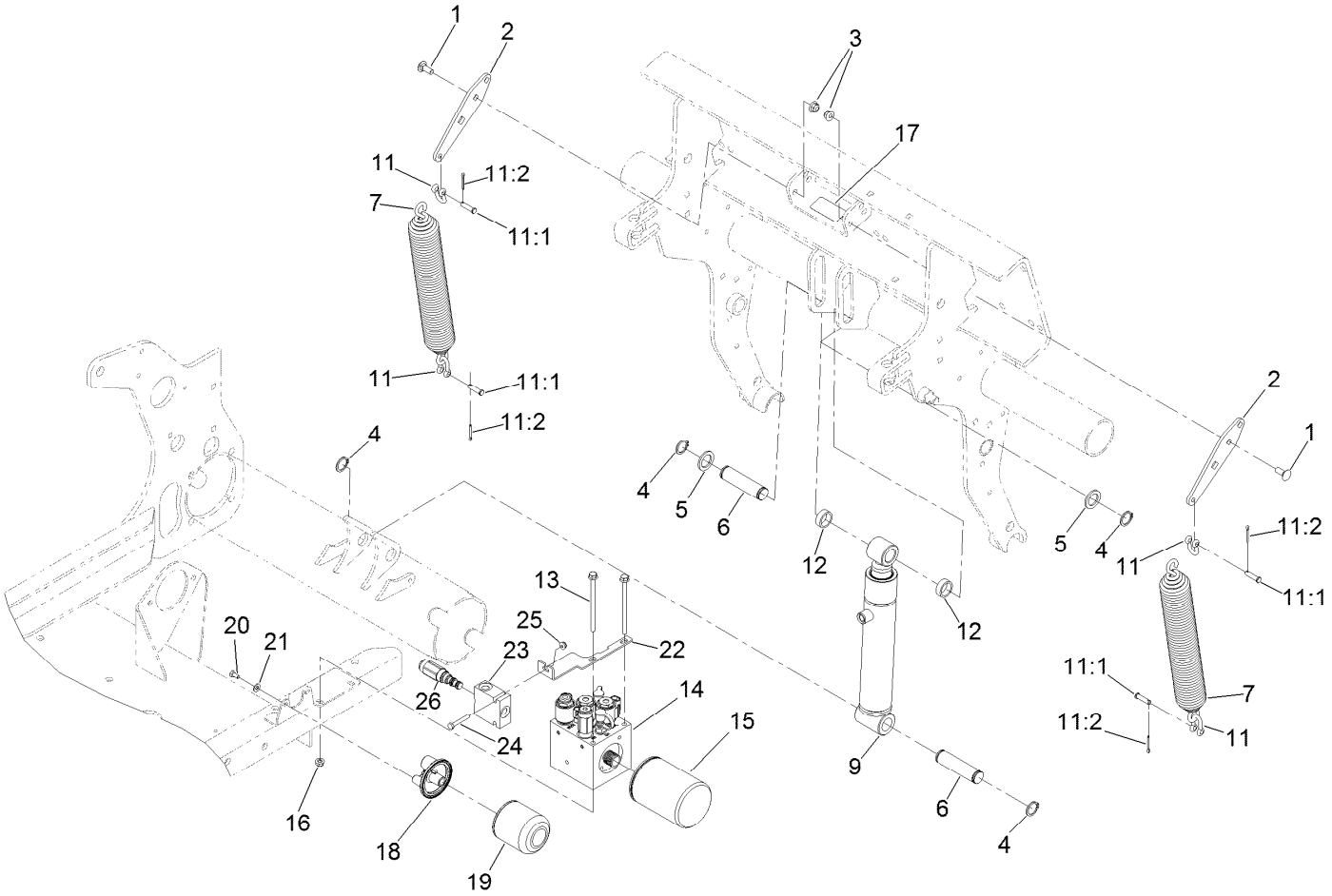


# Lift System Assembly

| Ref. | Part Number | Qty. | Description |
|---|---|---|---|
| 1 | 3231-2 | 4 | Bolt-CARR |
| 2 | 105-1190-01 | 2 | Plate-Tension, Spring |
| 3 | 104-8301 | 4 | Nut-HF, NI |
| 4 | 32151-36 | 4 | Ring-Retaining |
| 5 | 256-115 | 2 | Washer-Thrust |
| 6 | 105-1031 | 2 | Pin-Cylinder |
| 7 | 105-1156-03 | 2 | Spring-Extention |
| 9 | 140-2205 | 1 | Cylinder-Hydraulic |
| 11 | 282-4 | 4 | Shackle |
| 11:1 | 283-6 | 1 | Pin-Clevis |
| 11:2 | 3272-11 | 1 | Pin-Cotter |
| 12 | 88-7530 | 2 | Spacer |
| 13 | 126-5896 | 2 | Screw HHF |

| Ref. | Part Number | Qty. | Description |
|---|---|---|---|
| 14 | 106-8802 | 1 | Manifold-Control |
| 15 | 107-9531 | 1 | Filter-Oil, HYD |
| 16 | 104-8300 | 2 | Nut-HF, NI |
| 17 | 93-6696 | 1 | Decal-Warning |
| 18 | 103-2888 | 1 | Head-Filter |
| 19 | 1-633750 | 1 | Filter-Oil, HYD |
| 20 | 321-2 | 2 | Screw-HH |
| 21 | 3256-22 | 2 | Washer-Flat |
| 22 | 140-2244-01 | 1 | Bracket-Manifold |
| 23 | 131-8638 | 1 | Block-Manifold |
| 24 | 321-10 | 1 | Screw-HH |
| 25 | 104-7201 | 1 | Nut-HF, NI |
| 26 | 132-4893 | 1 | Valve-Sequence, 110 PSI |

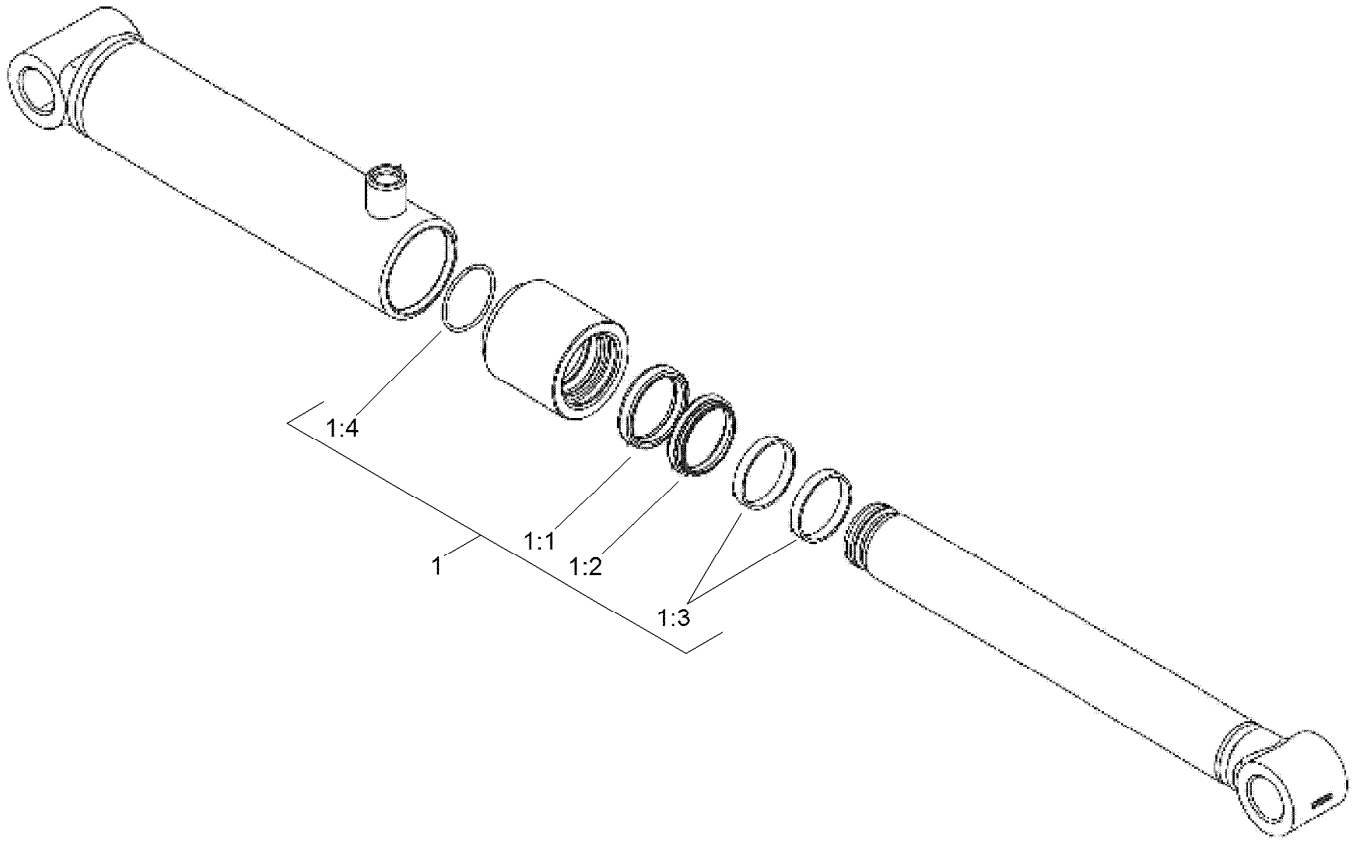


# Hydraulic Cylinder Assembly No. 140-2205

| *Ref.* | *Part Number* | *Qty.* | *Description* |
|---|---|---|---|
| 1 | 140-2207 | 1 | Seal Kit |
| 1:1 | | 1 | Rod Seal ● |
| 1:2 | | 1 | Rod Wiper ● |
| 1:3 | | 2 | Wear Ring ● |
| 1:4 | | 1 | Wire Ring ● |

● Not serviced separately

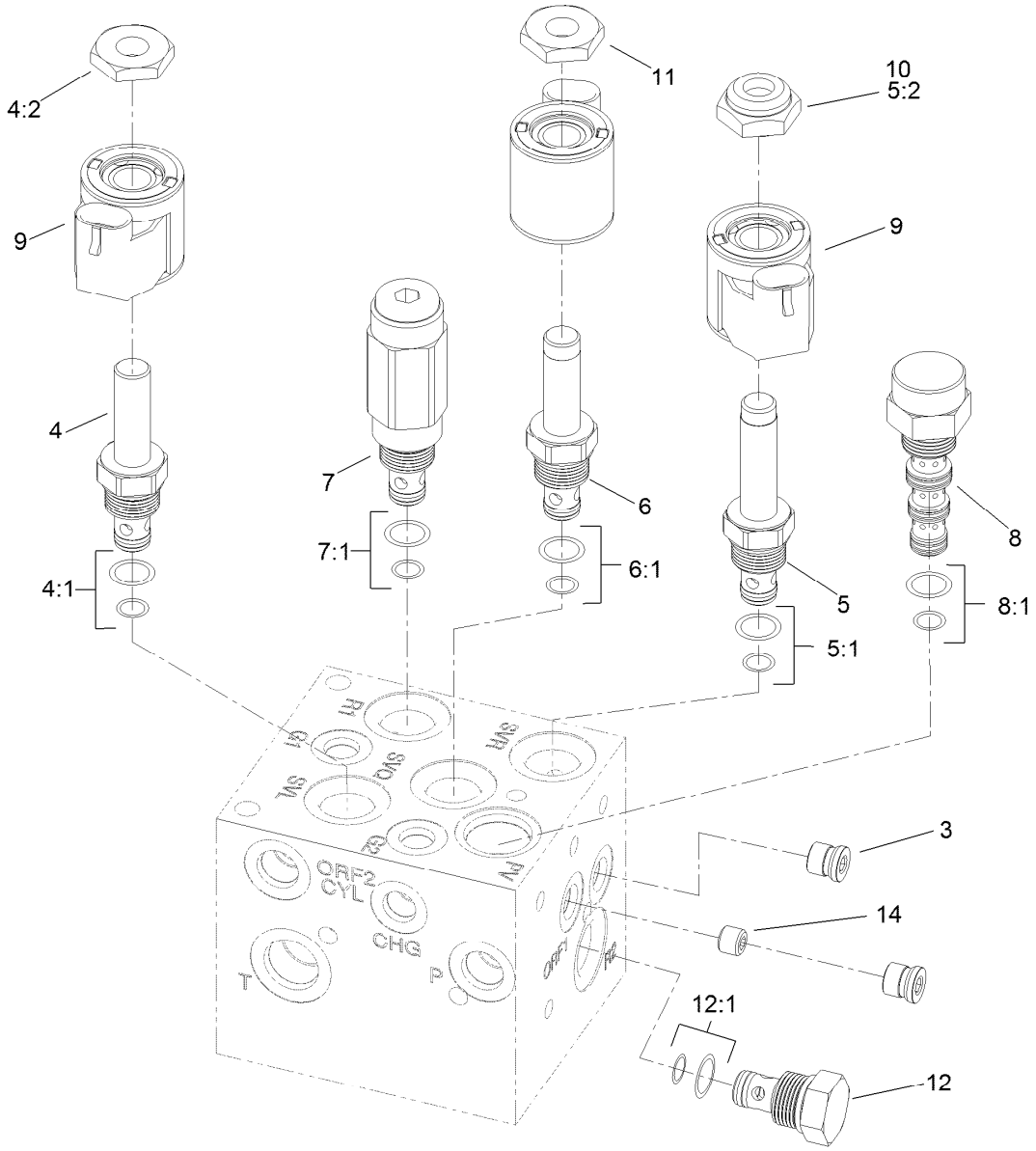


# Control Manifold Assembly No. 106-8802

| Ref. | Part Number | Qty. | Description |
|---|---|---|---|
| 3 | 106-1025 | 2 | Plug-HYD |
| 4 | 112-9206 | 1 | Solenoid Valve ASM |
| 4:1 | 105-9156 | 1 | Seal Kit |
| 4:2 | 110-2634 | 1 | Nut-Coil |
| 5 | 107-7517 | 1 | Valve-Solenoid |
| 5:1 | 105-9156 | 1 | Seal Kit |
| 5:2 | 107-7812 | 1 | Nut-Solenoid |
| 6 | 107-7518 | 1 | Valve-Solenoid |
| 6:1 | 107-7527 | 1 | Seal Kit |
| 7 | 107-7519 | 1 | Valve-Relief, 900 PSI |

| Ref. | Part Number | Qty. | Description |
|---|---|---|---|
| 7:1 | 105-9156 | 1 | Seal Kit |
| 8 | 107-7520 | 1 | Compensator-Pressure (W/Screen) |
| 8:1 | 110-8908 | 1 | Spool Valve Seal Kit |
| 9 | 110-0497 | 3 | Coil-Solenoid |
| 10 | 107-7522 | 1 | Nut-E Coil |
| 11 | 105-9332 | 2 | Nut-E Coil |
| 12 | 107-7524 | 1 | Check Valve ASM |
| 12:1 | 105-9156 | 1 | Seal Kit |
| 14 | 110-0495 | 1 | Plug-Orifice (0.050 Inch) |

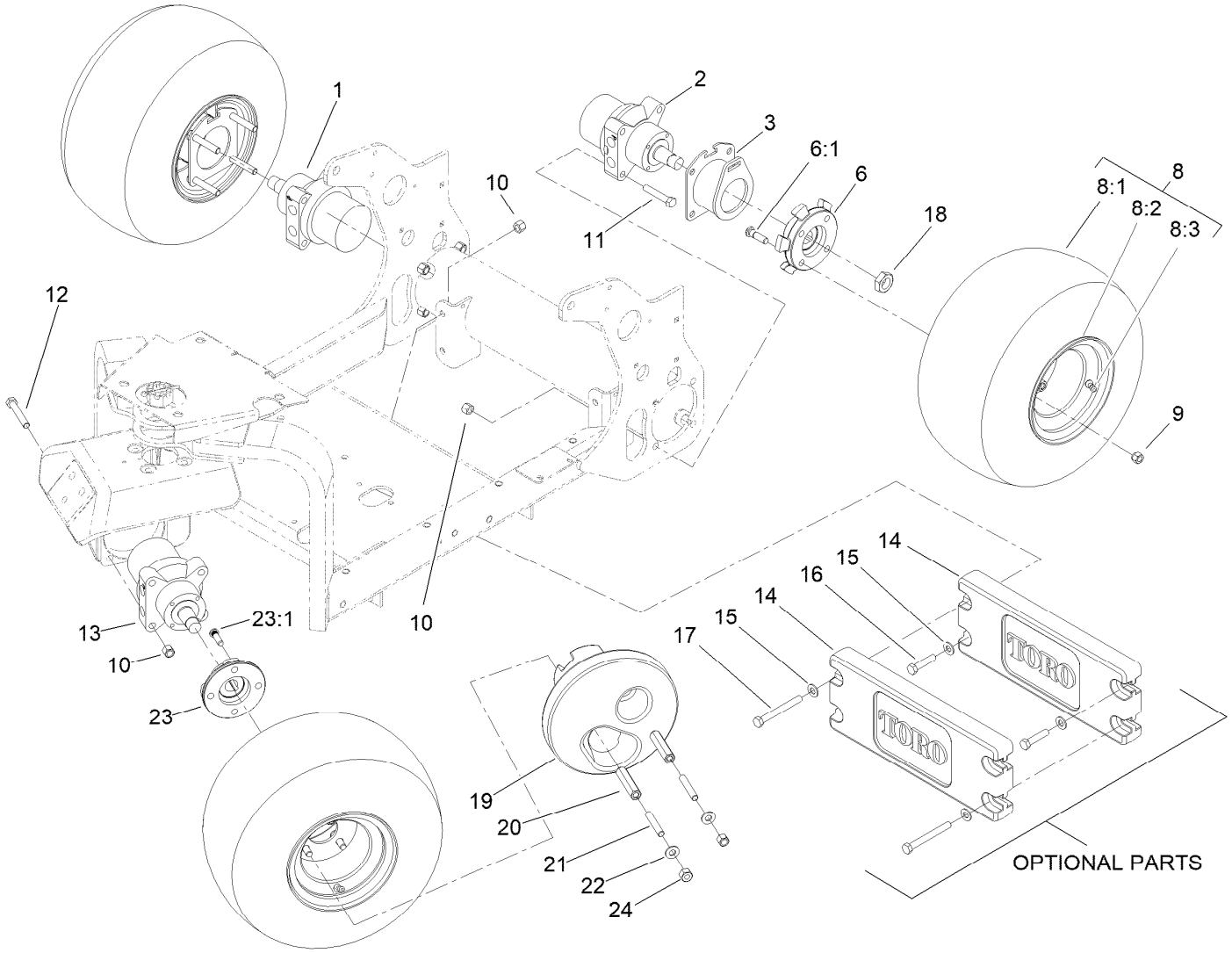


# Wheel and Motor Assembly

| Ref. | Part Number | Qty. | Description |
|---|---|---|---|
| 1 | 106-8807 | 1 | HYD Motor ASM |
| 2 | 106-8806 | 1 | HYD Motor ASM |
| 3 | 140-6269 | 2 | Parking Latch Supt |
| 6 | 140-6277 | 2 | Wheel Hub ASM |
| 6:1 | 10-6830 | 4 | Stud-Type, Drive |
| 8 | 114-4665 | 3 | Tire ASM |
| 8:1 | 70-8500 | 1 | Tire-Smooth, 4-Ply |
| 8:2 | 114-4643 | 1 | Wheel |
| 8:3 | 232-27 | 1 | Stem-Valve |
| 9 | 242-50 | 10 | Nut-Lug |
| 10 | 3296-23 | 16 | Nut-Lock, NI |
| 11 | 325-11 | 8 | Screw-HH |
| 12 | 325-13 | 4 | Screw-HH |

| Ref. | Part Number | Qty. | Description |
|---|---|---|---|
| 13 | 106-8808 | 1 | HYD Motor ASM |
| 14 | 99-6166-01 | 2 | Counterweight-Front |
| 15 | 3256-26 | 4 | Washer-Flat |
| 16 | 325-9 | 2 | Screw-HH |
| 17 | 325-18 | 2 | Screw-HH |
| 18 | 26-3790 | 3 | Nut-Lock |
| 19 | 107-3396-03 | 1 | Weight-Wheel |
| 20 | 107-3399 | 2 | Adapter-Weight, Wheel |
| 21 | 105-1088 | 2 | Stud |
| 22 | 87-7270 | 2 | Washer-Thrust |
| 23 | 140-6278 | 1 | Wheel Hub ASM |
| 23:1 | 10-6830 | 4 | Stud-Type, Drive |
| 24 | 3296-25 | 2 | Nut-Lock, NI |

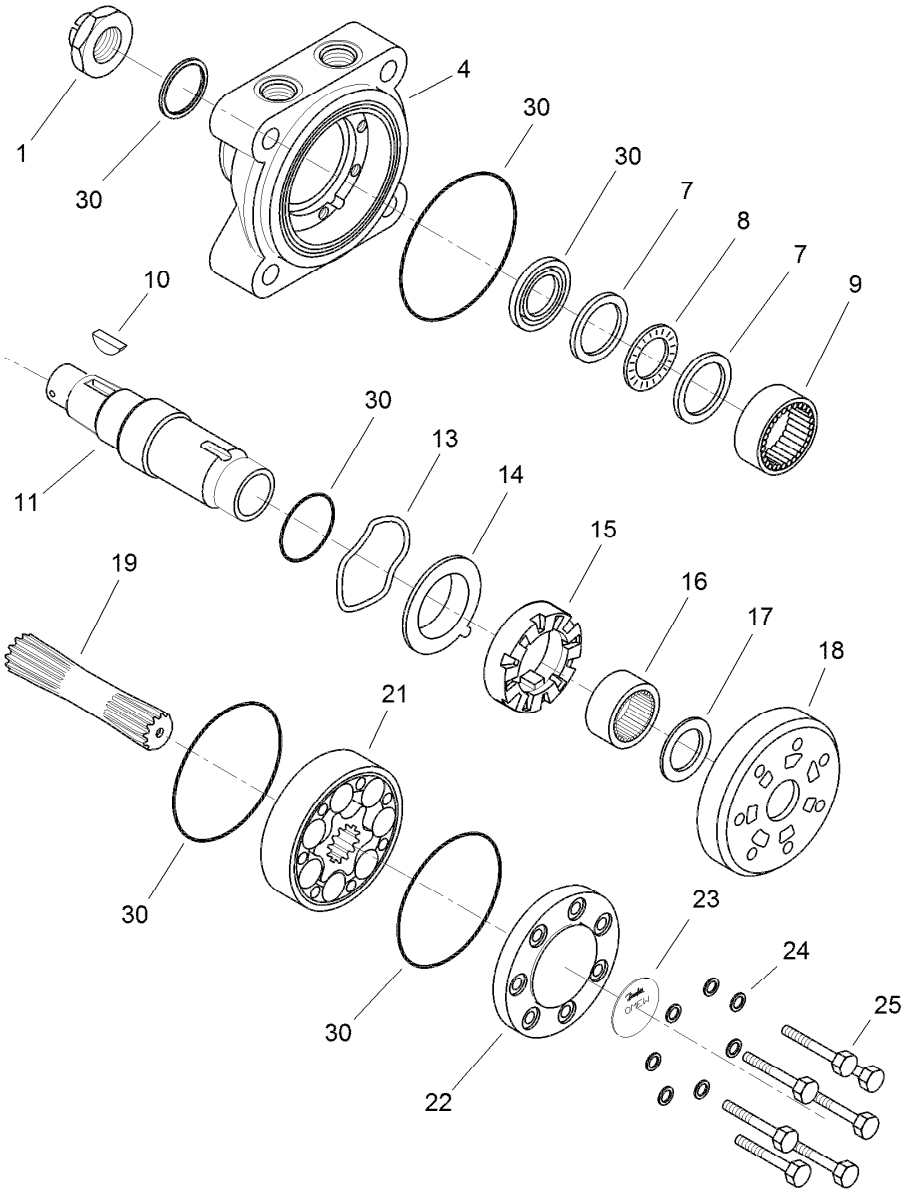


# (CW) Hydraulic Motor Assembly No. 106-8807

| Ref. | Part Number | Qty. | Description |
|---|---|---|---|
| 1 | | 1 | Nut-Castellated ● |
| 4 | | 1 | Housing ● |
| 7 | | 2 | Race-Bearing ● |
| 8 | | 1 | Bearing-Needle, Axial ● |
| 9 | | 1 | Bearing-Needle, Radial ● |
| 10 | 3257-42 | 1 | Key-Woodruff |
| 11 | | 1 | Shaft-Tapered ● |
| 13 | | 1 | Washer-Spring ● |
| 14 | | 1 | Plate-Balance ● |
| 15 | | 1 | Disc-Valve ● |

| Ref. | Part Number | Qty. | Description |
|---|---|---|---|
| 16 | | 1 | Bearing-Needle, Radial ● |
| 17 | | 1 | Race-Bearing ● |
| 18 | | 1 | Plate-Distributor ● |
| 19 | | 1 | Shaft-Cardan ● |
| 21 | | 1 | Gearwheel Set ● |
| 22 | | 1 | Cover-End ● |
| 23 | | 1 | Plate-Name ● |
| 24 | | 7 | Washer ● |
| 25 | | 7 | Screw ● |
| 30 | 109-5966 | 1 | Wheel Motor Seal Kit |

● Not serviced separately

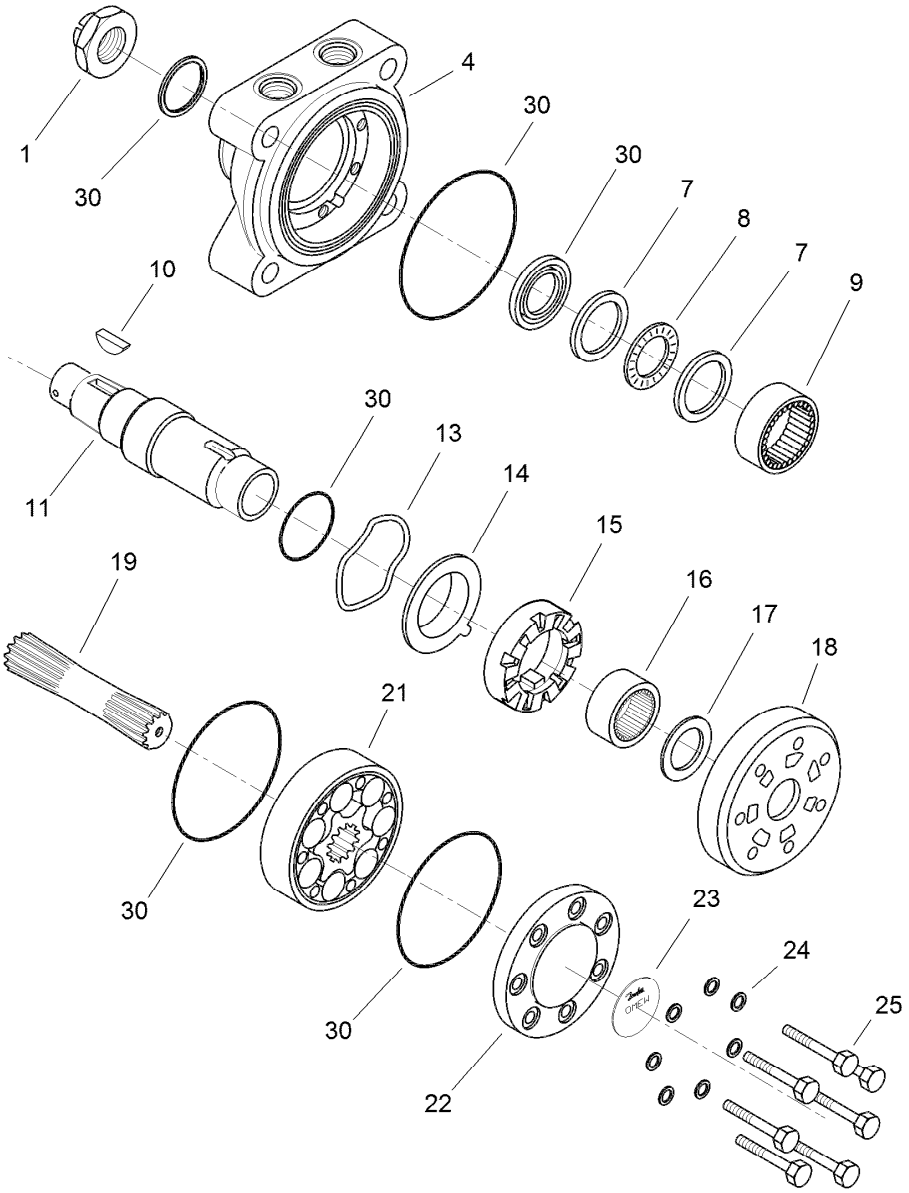


# (CCW) Hydraulic Motor Assembly No. 106-8806

| Ref. | Part Number | Qty. | Description |
|---|---|---|---|
| 1 | | 1 | Nut-Castellated ● |
| 4 | | 1 | Housing ● |
| 7 | | 2 | Race-Bearing ● |
| 8 | | 1 | Bearing-Needle, Axial ● |
| 9 | | 1 | Bearing-Needle, Radial ● |
| 10 | 3257-42 | 1 | Key-Woodruff |
| 11 | | 1 | Shaft-Tapered ● |
| 13 | | 1 | Washer-Spring ● |
| 14 | | 1 | Plate-Balance ● |
| 15 | | 1 | Disc-Valve ● |

| Ref. | Part Number | Qty. | Description |
|---|---|---|---|
| 16 | | 1 | Bearing-Needle, Radial ● |
| 17 | | 1 | Race-Bearing ● |
| 18 | | 1 | Plate-Distributor ● |
| 19 | | 1 | Shaft-Cardan ● |
| 21 | | 1 | Gearwheel Set ● |
| 22 | | 1 | Cover-End ● |
| 23 | | 1 | Plate-Name ● |
| 24 | | 7 | Washer ● |
| 25 | | 7 | Screw ● |
| 30 | 109-5966 | 1 | Wheel Motor Seal Kit |

● Not serviced separately

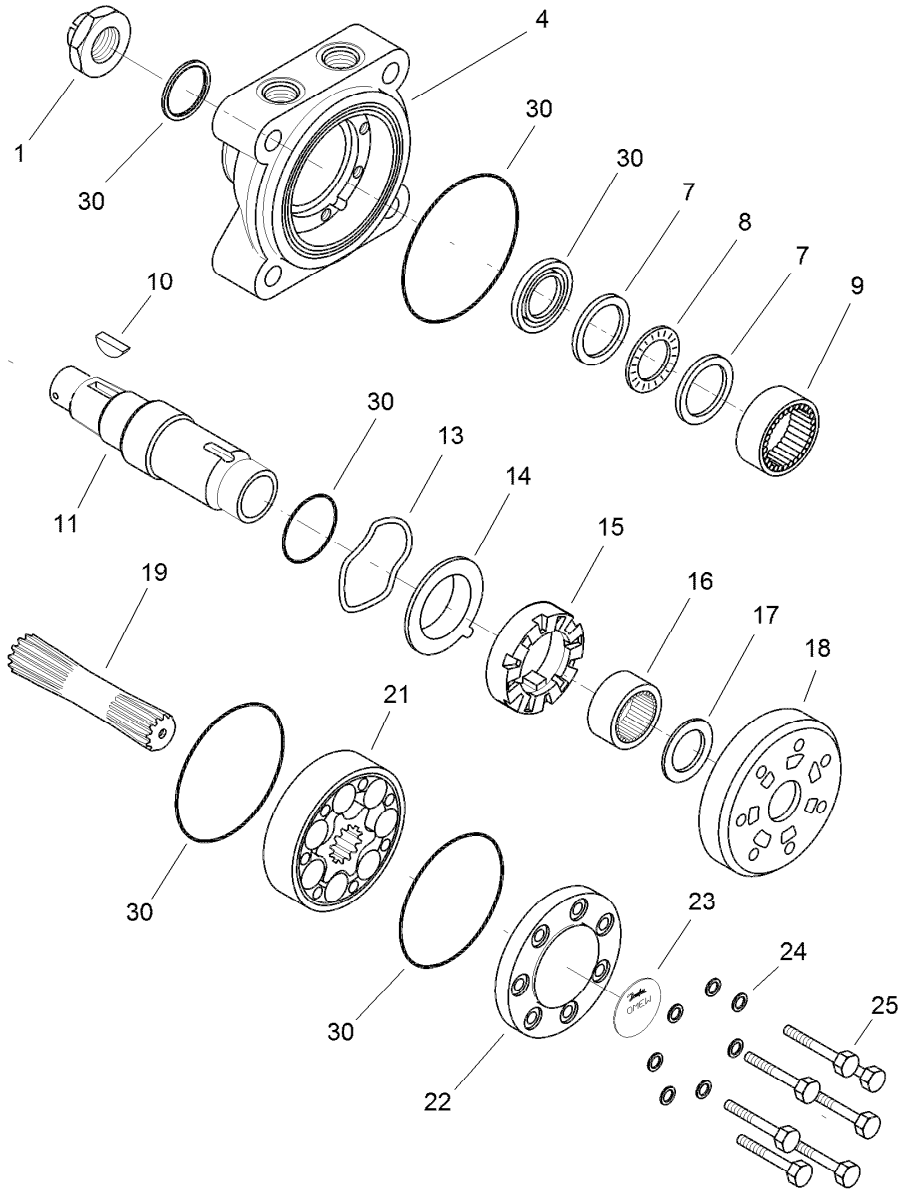


# (CCW) Hydraulic Motor Assembly No. 106-8808

| Ref. | Part Number | Qty. | Description |
|---|---|---|---|
| 1 | | 1 | Nut-Castellated ● |
| 4 | | 1 | Housing ● |
| 7 | | 2 | Race-Bearing ● |
| 8 | | 1 | Bearing-Needle, Axial ● |
| 9 | | 1 | Bearing-Needle, Radial ● |
| 10 | 3257-42 | 1 | Key-Woodruff |
| 11 | | 1 | Shaft-Tapered ● |
| 13 | | 1 | Washer-Spring ● |
| 14 | | 1 | Plate-Balance ● |
| 15 | | 1 | Disc-Valve ● |

| Ref. | Part Number | Qty. | Description |
|---|---|---|---|
| 16 | | 1 | Bearing-Needle, Radial ● |
| 17 | | 1 | Race-Bearing ● |
| 18 | | 1 | Plate-Distributor ● |
| 19 | | 1 | Shaft-Cardan ● |
| 21 | | 1 | Gearwheel Set ● |
| 22 | | 1 | Cover-End ● |
| 23 | | 1 | Plate-Name ● |
| 24 | | 7 | Washer ● |
| 25 | | 7 | Screw ● |
| 30 | 109-5966 | 1 | Wheel Motor Seal Kit |

● Not serviced separately

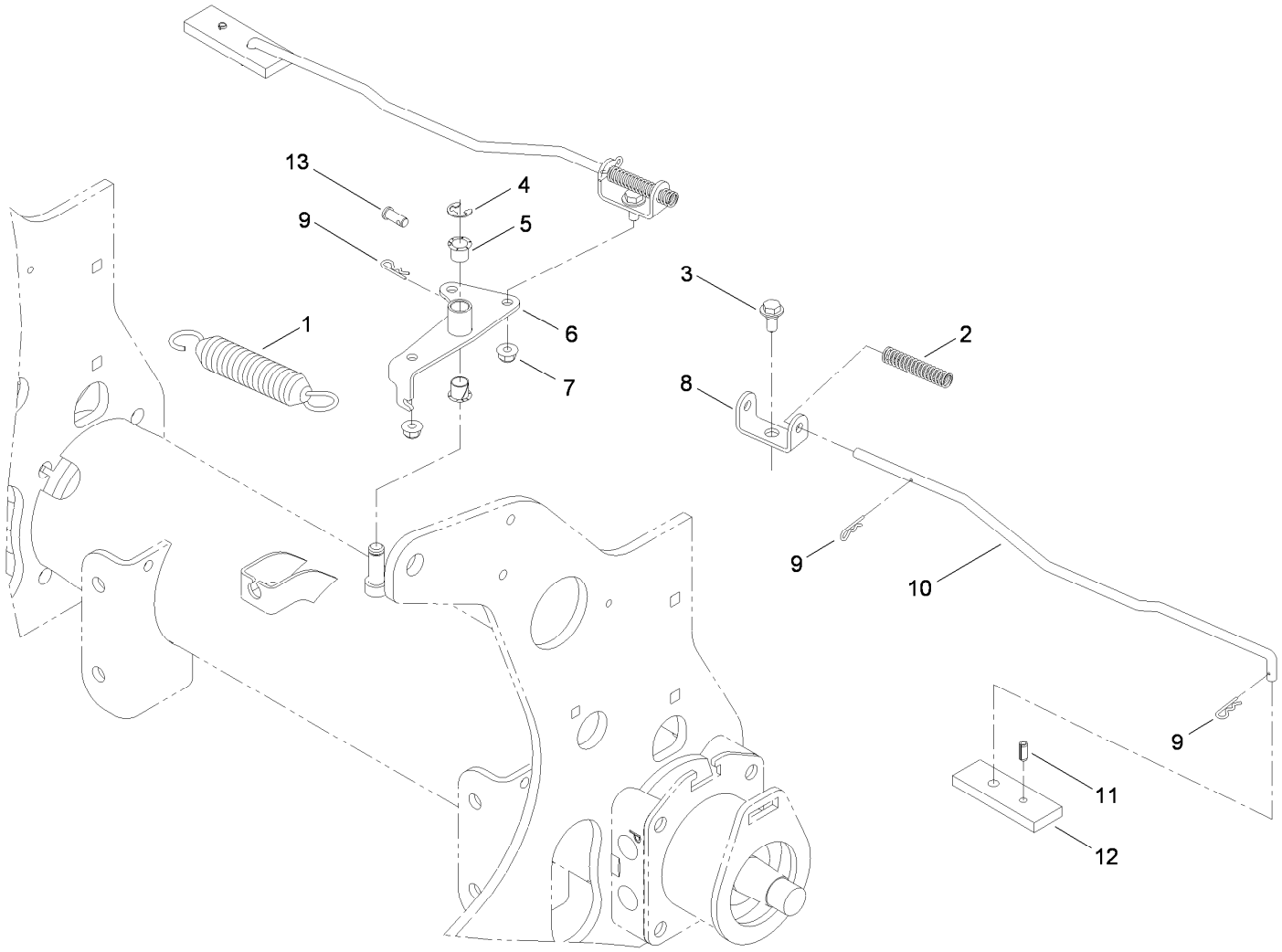


# Brake Latch Assembly

| *Ref.* | *Part Number* | *Qty.* | *Description* |
|---|---|---|---|
| 1 | 66-4270 | 1 | Spring-Extension |
| 2 | 107-3376 | 2 | Spring-Compression |
| 3 | 19-1470 | 2 | Screw-Shoulder |
| 4 | 32120-47 | 2 | Ring-Retaining, External |
| 5 | 256-257 | 2 | Bushing-Nyliner |
| 6 | 106-8887-0P | 1 | Parking Latch Pivot ASM [primed |
| 7 | 104-8300 | 2 | Nut-HF, NI |
| 8 | 114-0631 | 2 | Clevis-Latch, Parking |
| 9 | 3290-307 | 5 | Pin-Cotter |
| 10 | 106-8886 | 2 | Link-Latch, Parking |
| 11 | 32121-134 | 2 | Pin-Roll |
| 12 | 106-8885-03 | 2 | Bar-Latch, Parking |
| 13 | 283-62 | 1 | Pin-Clevis |

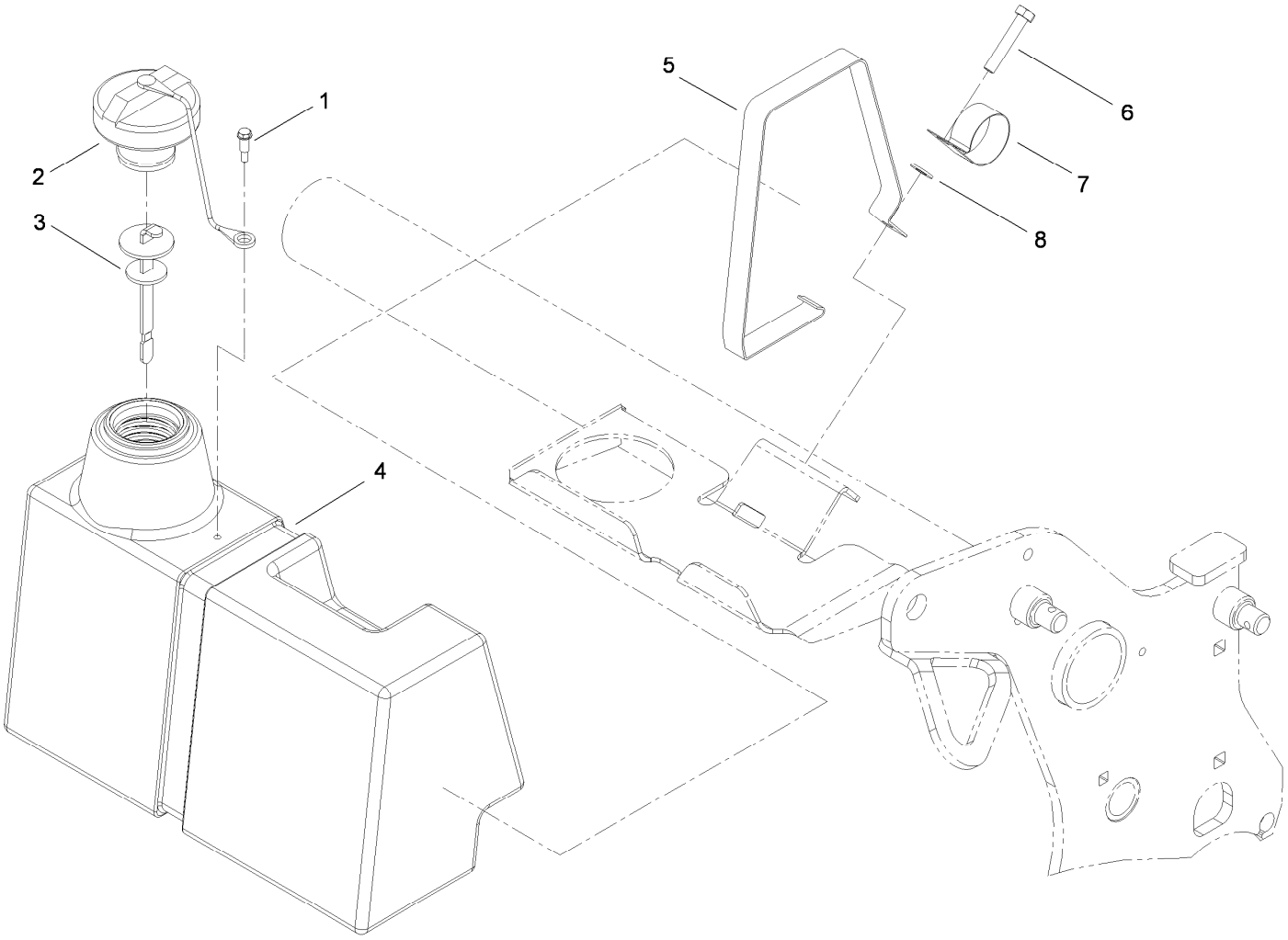


# Hydraulic Tank Assembly

| *Ref.* | *Part Number* | *Qty.* | *Description* |
|---|---|---|---|
| 1 | 57-5420 | 1 | Screw-Shoulder |
| 2 | 93-7160 | 1 | Cap-Oil, HYD |
| 3 | 106-8811 | 1 | Dipstick ASM |
| 4 | 127-4162 | 1 | Reservoir-Oil, HYD |
| 5 | 94-4642-03 | 1 | Strap-Tank, HYD |
| 6 | 120-6000 | 1 | Bolt-TAP, HH |
| 7 | 2412-150 | 1 | Clip-J |
| 8 | 3256-23 | 1 | Washer-Plain |

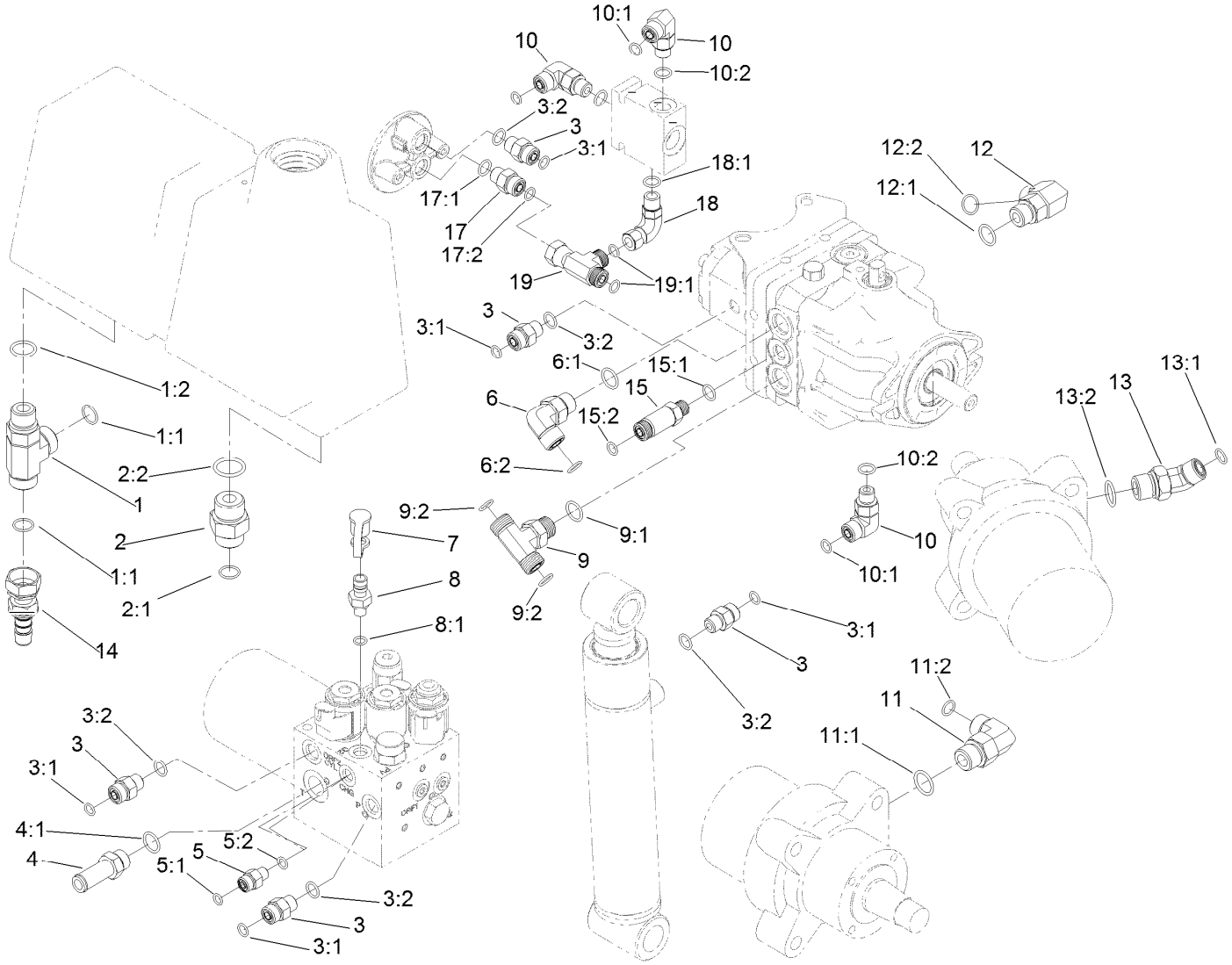


# Hydraulic Fitting Assembly

| Ref. | Part Number | Qty. | Description |
|---|---|---|---|
| 1 | 340-22 | 1 | Fitting-Tee |
| 1:1 | 237-65 | 2 | O-Ring |
| 1:2 | 237-80 | 1 | O-Ring |
| 2 | 340-8 | 1 | Fitting-Straight |
| 2:1 | 237-65 | 1 | O-Ring |
| 2:2 | 237-81 | 1 | O-Ring |
| 3 | 340-2 | 5 | Fitting-Straight |
| 3:1 | 237-22 | 1 | O-Ring |
| 3:2 | 237-42 | 1 | O-Ring |
| 4 | 107-7569 | 1 | Fitting-STR |
| 4:1 | 237-79 | 1 | O-Ring |
| 5 | 340-88 | 1 | Fitting-Straight |
| 5:1 | 237-22 | 1 | O-Ring |
| 5:2 | 237-78 | 1 | O-Ring |
| 6 | 340-98 | 1 | Fitting-Elbow, 90 DEG |
| 6:1 | 237-79 | 1 | O-Ring |
| 6:2 | 237-30 | 1 | O-Ring |
| 7 | 354-79 | 2 | Cap-Dust |

| Ref. | Part Number | Qty. | Description |
|---|---|---|---|
| 8 | 354-77 | 2 | Fitting-Quick |
| 8:1 | 237-78 | 1 | O-Ring ● |
| 9 | 340-157 | 1 | Fitting-HYD, Tee |
| 9:1 | 237-79 | 1 | O-Ring |
| 9:2 | 237-30 | 2 | O-Ring |
| 10 | 340-77 | 3 | Fitting-Elbow, 90 DEG |
| 10:1 | 237-22 | 1 | O-Ring |
| 10:2 | 237-42 | 1 | O-Ring |
| 11 | 340-105 | 4 | Fitting-Elbow, 90 DEG |
| 11:1 | 237-80 | 1 | O-Ring |
| 11:2 | 237-30 | 1 | O-Ring |
| 12 | 340-153 | 1 | Fitting-Elbow, 90 DEG |
| 12:1 | 237-79 | 1 | O-Ring |
| 12:2 | 237-151 | 1 | O-Ring |
| 13 | 340-89 | 2 | Fitting-HYD, 45 DEG |
| 13:1 | 237-30 | 1 | O-Ring |
| 13:2 | 237-80 | 1 | O-Ring |
| 14 | 107-7568 | 1 | Fitting-HYD, Barbed |

● Not illustrated

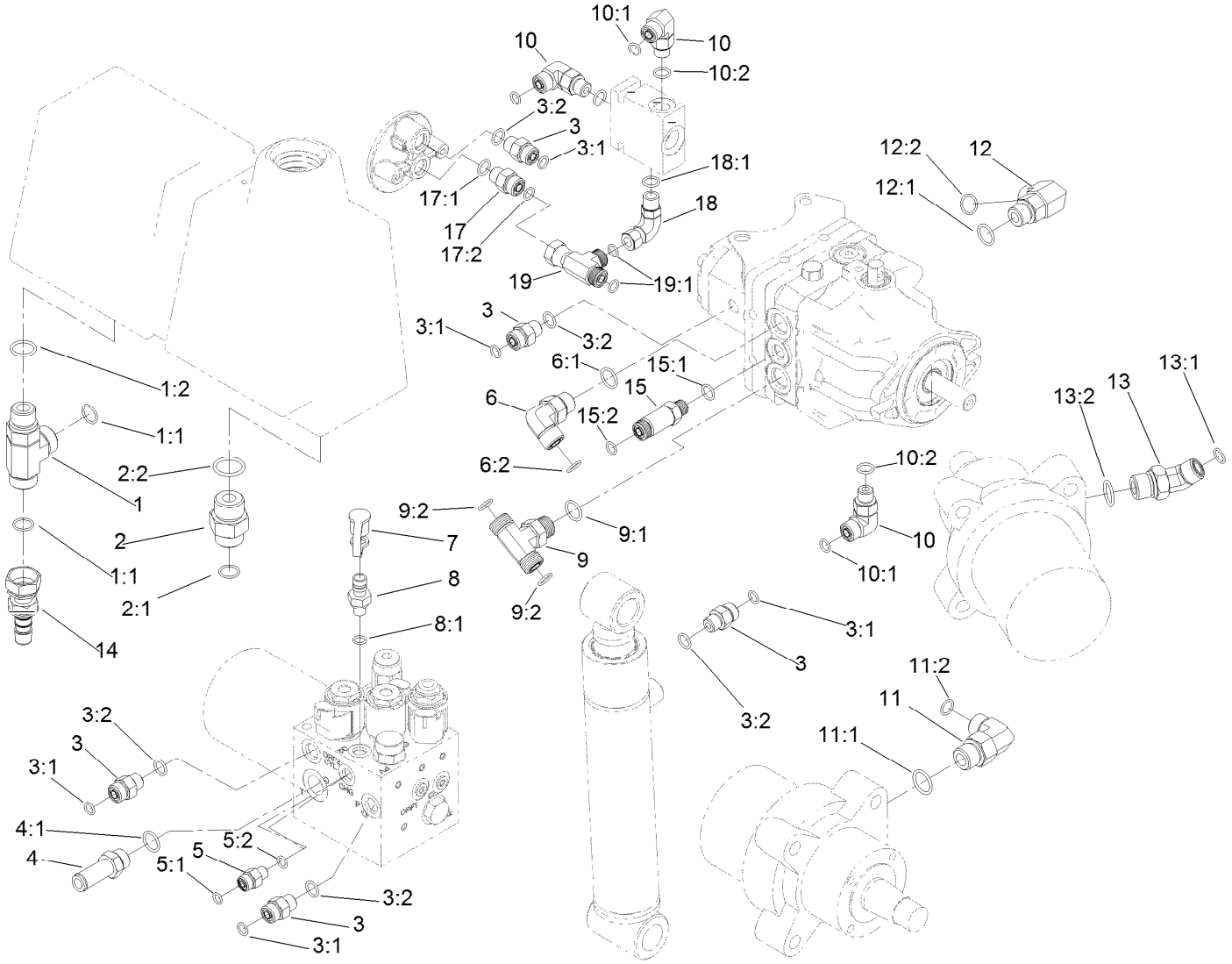


# Hydraulic Fitting Assembly (continued)

| Ref. | Part Number | Qty. | Description |
|---|---|---|---|
| 15 | 95-4137 | 1 | Fitting-STR |
| 15:1 | 237-42 | 1 | O-Ring |
| 15:2 | 237-22 | 1 | O-Ring |
| 17 | 100-7210 | 1 | Check Valve |
| 17:1 | 237-42 | 1 | O-Ring |

| Ref. | Part Number | Qty. | Description |
|---|---|---|---|
| 17:2 | 237-22 | 1 | O-Ring |
| 18 | 340-110 | 1 | Fitting-Swivel, 90 DEG |
| 18:1 | 237-42 | 1 | O-Ring |
| 19 | 340-115 | 1 | Fitting-Tee |
| 19:1 | 237-22 | 2 | O-Ring |

● Not illustrated

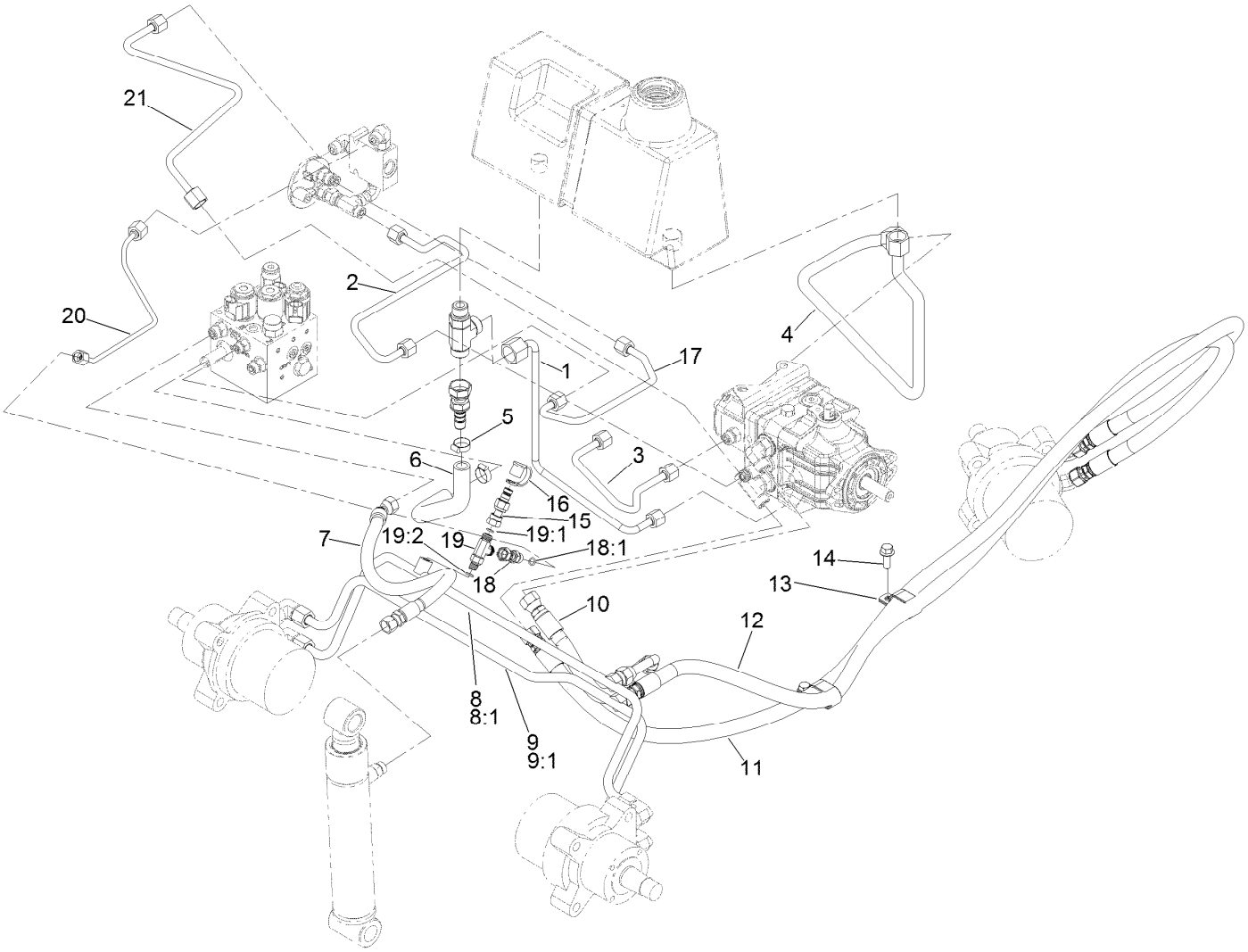


# Hardline and Hose Assembly

| Ref. | Part Number | Qty. | Description |
|---|---|---|---|
| 1 | 107-3388 | 1 | Tube ASM |
| 2 | 140-8822 | 1 | Hydraulic Tube ASM |
| 3 | 112-6539 | 1 | Tube-HYD |
| 4 | 107-3387 | 1 | Tube ASM |
| 5 | 2412-141 | 2 | Clamp-Drive, Worm |
| 6 | 107-7565 | 1 | Hose-Formed |
| 7 | 137-6626 | 1 | Hose-HYD |
| 8 | 106-8819 | 1 | Tube ASM |
| 8:1 | 237-30 | 1 | O-Ring |
| 9 | 106-8818 | 1 | Tube ASM |
| 9:1 | 237-30 | 1 | O-Ring |
| 10 | 84-0890 | 1 | Hose ASM |
| 11 | 106-8822 | 1 | Hose ASM |

| Ref. | Part Number | Qty. | Description |
|---|---|---|---|
| 12 | 106-8821 | 1 | Hose ASM |
| 13 | 106-8829 | 2 | R Clamp-Double |
| 14 | 3234-11 | 2 | Screw-HHF |
| 15 | 115-8886 | 1 | Nipple-Test |
| 16 | 354-79 | 1 | Cap-Dust |
| 17 | 108-6811 | 1 | Tube ASM |
| 18 | 140-2234 | 1 | Fitting |
| 18:1 | 237-21 | 1 | O-Ring |
| 19 | 340-140 | 1 | Fitting-Tee |
| 19:1 | 237-21 | 2 | O-Ring |
| 19:2 | 237-78 | 1 | O-Ring |
| 20 | 140-8819 | 1 | Hydraulic Tube ASM |
| 21 | 140-8821 | 1 | Hydraulic Tube ASM |

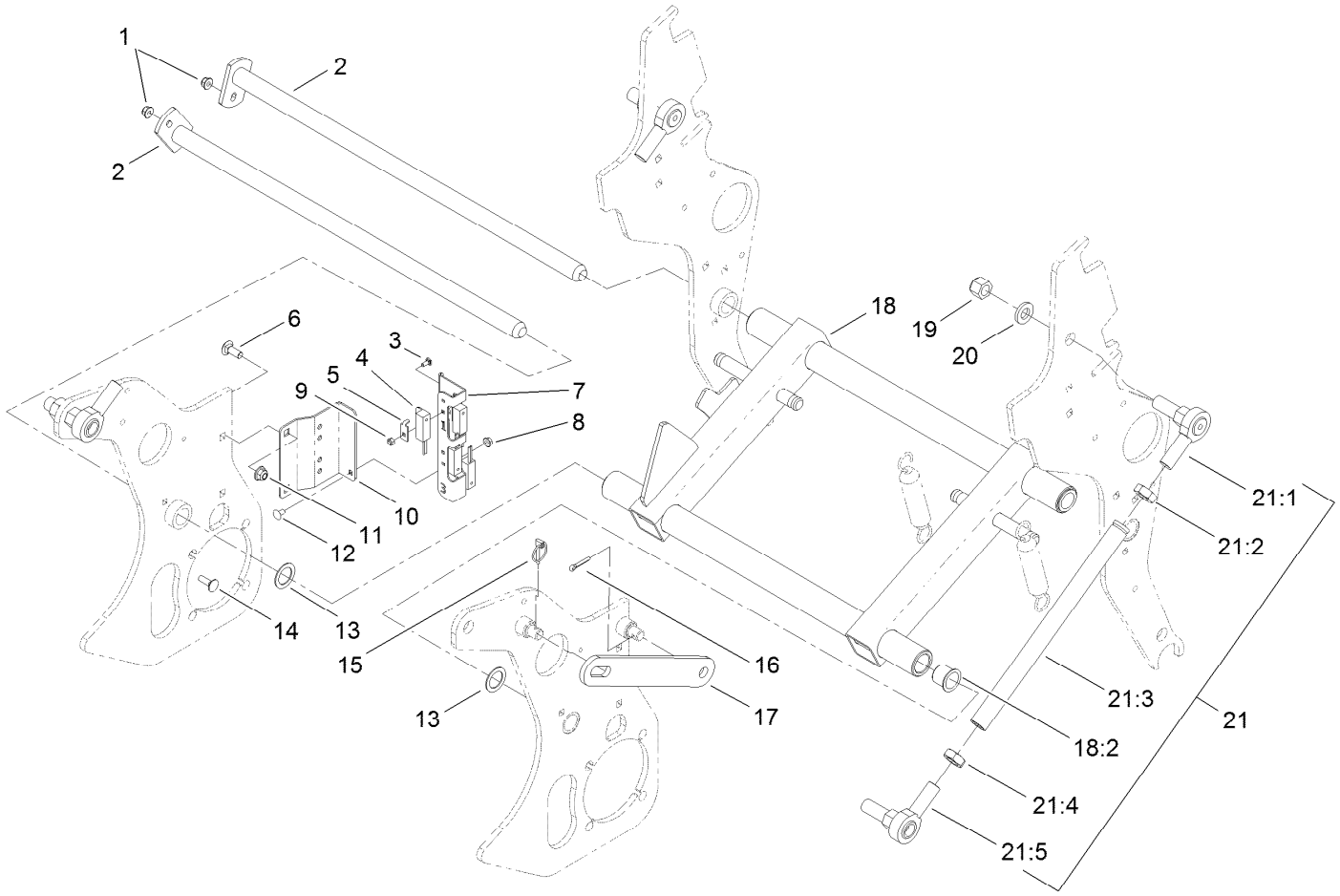


# H-Frame Assembly

| Ref. | Part Number | Qty. | Description |
|---|---|---|---|
| 1 | 104-8300 | 2 | Nut-HF, NI |
| 2 | 105-0950 | 2 | Pivot Shaft ASM |
| 3 | 104-1450 | 4 | Bolt-CARR |
| 4 | 100-1270 | 4 | Switch-Proximity |
| 5 | 100-4872 | 4 | Plate-Switch, Neutral |
| 6 | 3231-2 | 2 | Bolt-CARR |
| 7 | 140-2266 | 1 | Bracket-Sensor |
| 8 | 32128-10 | 2 | Nut-Lock, HHF |
| 9 | 3296-2 | 4 | Nut-Lock, NI |
| 10 | 105-1006-01 | 1 | Bracket-Switch |
| 11 | 104-8301 | 2 | Nut-HF, NI |
| 12 | 3229-10 | 2 | Screw-CARR |
| 13 | 10-8110 | 3 | Washer-Thrust |
| 14 | 3230-2 | 2 | Bolt-CARR |

| Ref. | Part Number | Qty. | Description |
|---|---|---|---|
| 15 | 3290-495 | 1 | Pin-Klik |
| 16 | 3272-21 | 1 | Pin-Cotter |
| 17 | 105-0983-01 | 1 | Bar-Prop |
| 18 | 112-6516 | 1 | H Frame ASM |
| 18:2 | 126-1963 | 4 | Bushing-Pivot |
| 19 | 3296-50 | 4 | Nut-Lock, NI |
| 20 | 92-5836 | 4 | Washer |
| 21 | 114-2702 | 2 | Link ASM |
| 21:1 | 105-1025 | 1 | End-Rod |
| 21:2 | 3220-17 | 1 | Nut-Jam, LH |
| 21:3 | 105-1007 | 1 | Link-Upper |
| 21:4 | 3220-7 | 1 | Nut-Jam |
| 21:5 | 2411-40 | 1 | End-Rod |

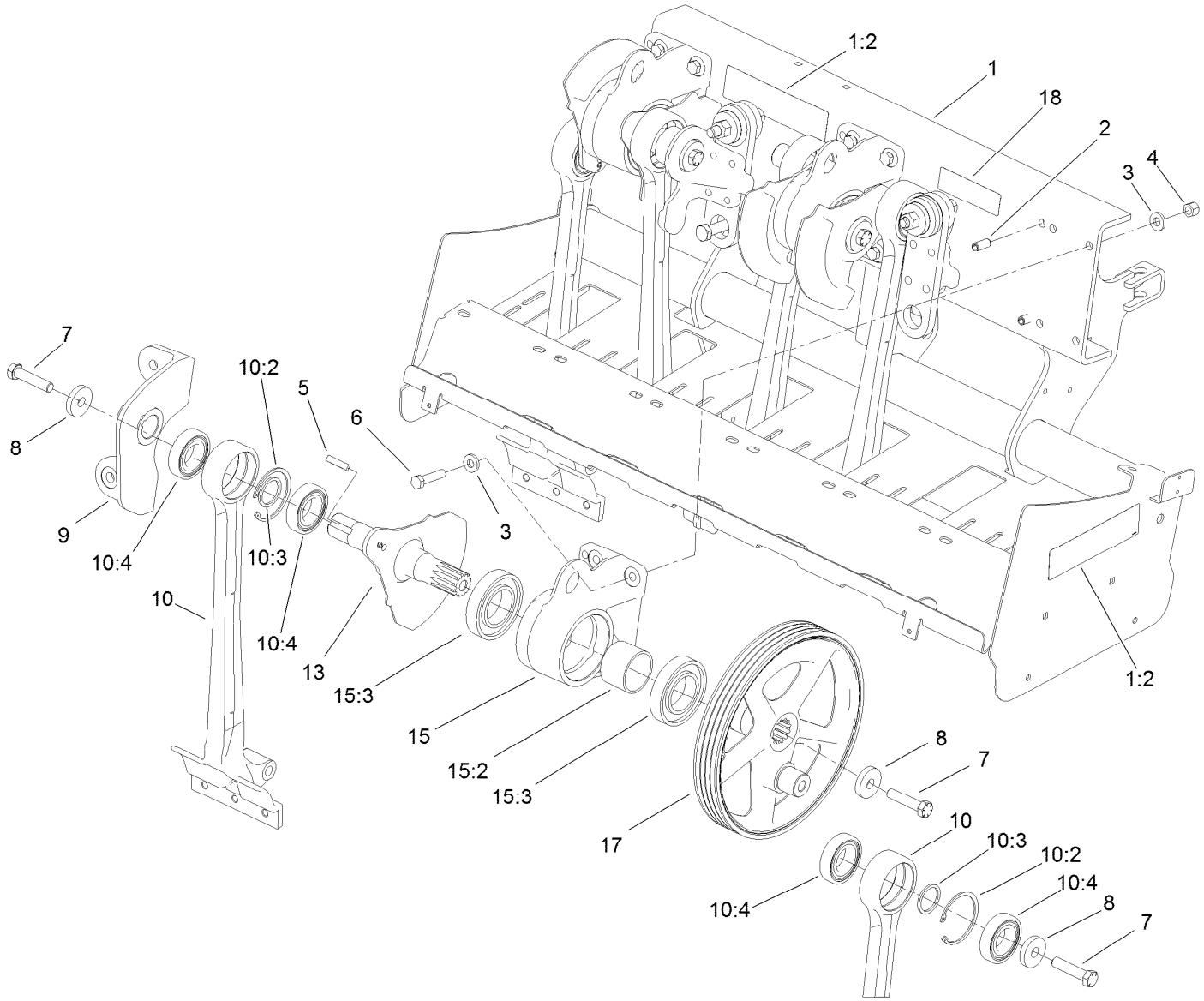


# Coring Head Crank No. 1 and 2 Assembly

| Ref. | Part Number | Qty. | Description |
|---|---|---|---|
| 1 | 131-1740 | 1 | Rear Frame Service ASM |
| 1:2 | 107-7534 | 3 | Decal-Warning |
| 2 | 105-1041 | 2 | Pin-Spring |
| 3 | 107-3395 | 8 | Washer-Hardened |
| 4 | 3296-23 | 4 | Nut-Lock, NI |
| 5 | 110-4546 | 1 | Key-Square |
| 6 | 325-9 | 4 | Screw-HH |
| 7 | 110-4614 | 3 | Screw-HH |
| 8 | 105-1016 | 3 | Washer-Hardened |
| 9 | 110-4567 | 1 | Coupling-No. 2 |
| 10 | 115-2822 | 2 | Stomper Arm & Bearing ASM |

| Ref. | Part Number | Qty. | Description |
|---|---|---|---|
| 10:2 | 32151-76 | 1 | Ring-Retaining, Internal |
| 10:3 | 110-4557 | 1 | Spacer-Bearing |
| 10:4 | 110-4556 | 2 | Bearing-Ball |
| 13 | 110-4571 | 1 | Crankarm-No. 2, 4, 6 |
| 15 | 115-4703 | 1 | Housing ASM |
| 15:2 | 105-1017 | 1 | Spacer |
| 15:3 | 105-0965 | 2 | Bearing-Ball |
| 17 | 114-1458 | 1 | Pulley-Crankshaft |
| 18 | 140-2269 | 1 | Decal-Service, CE |

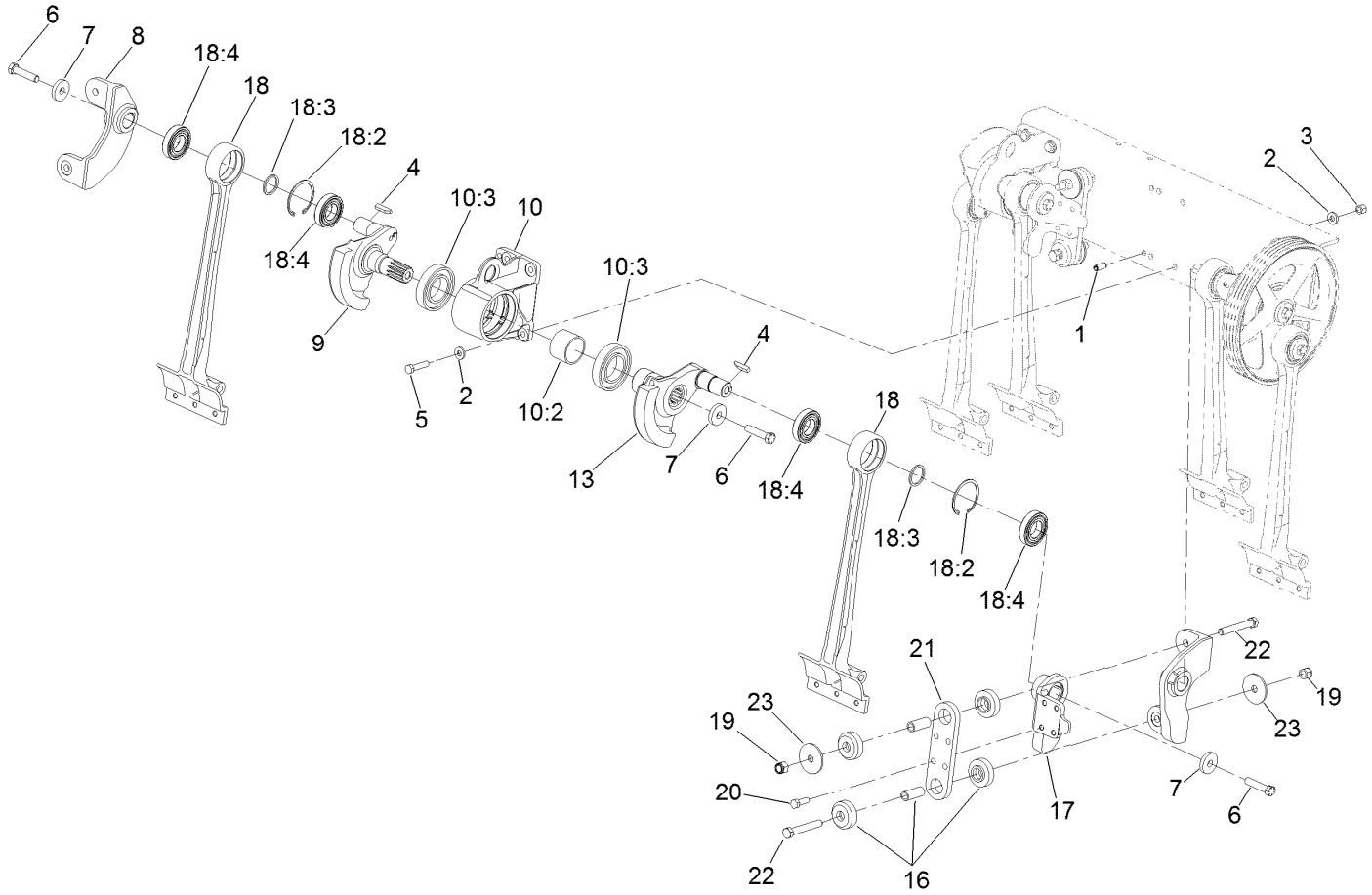


# Coring Head Crank No. 3 and 4 Assembly

| Ref. | Part Number | Qty. | Description |
|---|---|---|---|
| 1 | 105-1041 | 2 | Pin-Spring |
| 2 | 107-3395 | 8 | Washer-Hardened |
| 3 | 3296-23 | 4 | Nut-Lock, NI |
| 4 | 110-4546 | 2 | Key-Square |
| 5 | 325-9 | 4 | Screw-HH |
| 6 | 110-4614 | 3 | Screw-HH |
| 7 | 105-1016 | 3 | Washer-Hardened |
| 8 | 110-4569 | 1 | Coupling-No.4 |
| 9 | 110-4571 | 1 | Crankarm-No. 2, 4, 6 |
| 10 | 115-4703 | 1 | Housing ASM |
| 10:2 | 105-1017 | 1 | Spacer |
| 10:3 | 105-0965 | 2 | Bearing-Ball |
| 13 | 110-4572 | 1 | Crankarm-No. 3, 5, 7 |

| Ref. | Part Number | Qty. | Description |
|---|---|---|---|
| 16 | 105-0963 | 2 | Mount-ISO, Crank |
| 17 | 110-4568 | 1 | Coupling-No. 3 |
| 18 | 115-2822 | 2 | Stomper Arm & Bearing ASM |
| 18:2 | 32151-76 | 1 | Ring-Retaining, Internal |
| 18:3 | 110-4557 | 1 | Spacer-Bearing |
| 18:4 | 110-4556 | 2 | Bearing-Ball |
| 19 | 3296-53 | 2 | Nut-Lock, NI |
| 20 | 325-6 | 4 | Screw-HH |
| 21 | 105-0974-03 | 1 | Plate-Coupling |
| 22 | 327-29 | 2 | Screw-HH |
| 23 | 110-4549 | 2 | Washer-Snubbing |

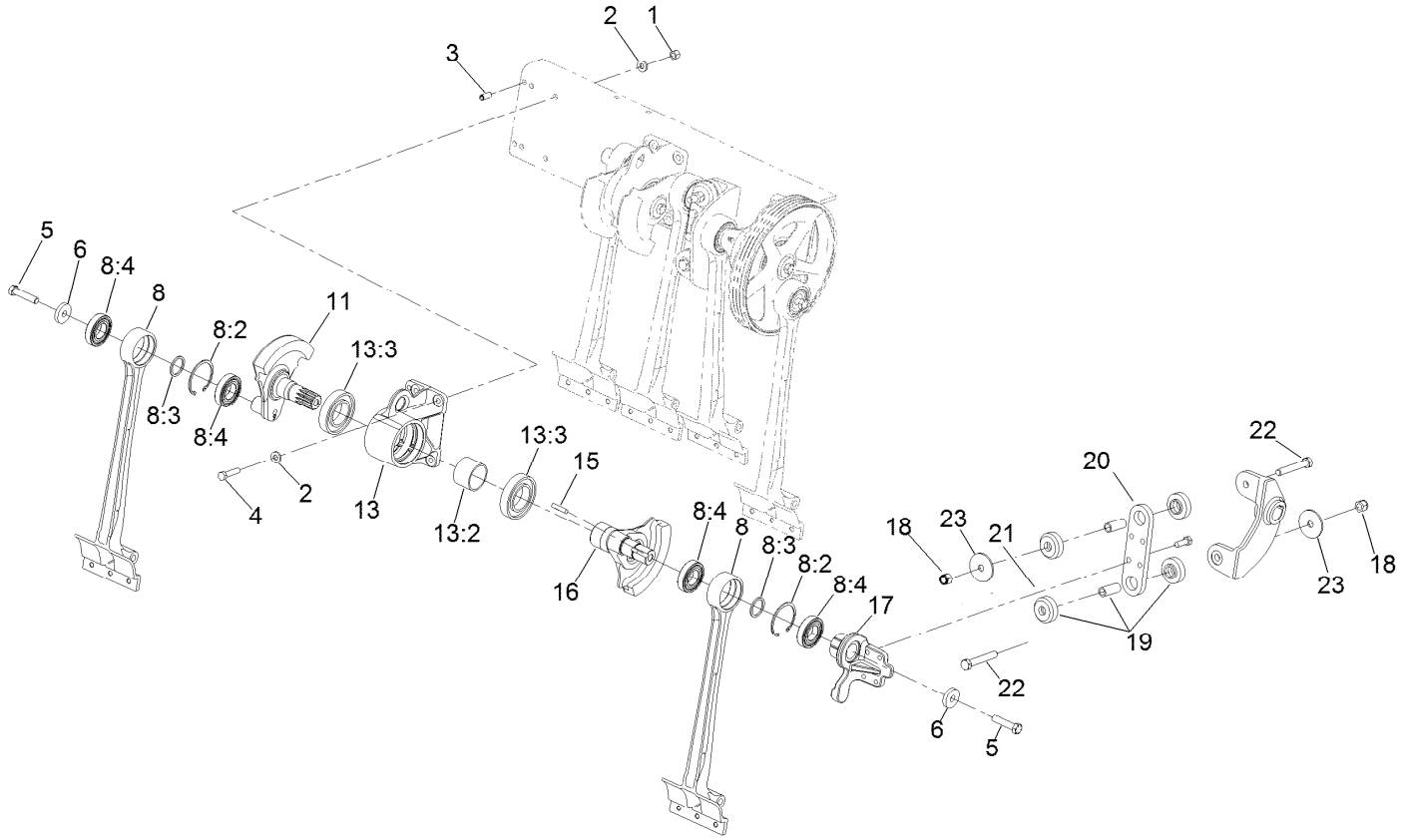


# Coring Head Crank No. 5 and 6 Assembly

| Ref. | Part Number | Qty. | Description |
|---|---|---|---|
| 1 | 3296-23 | 4 | Nut-Lock, NI |
| 2 | 107-3395 | 8 | Washer-Hardened |
| 3 | 105-1041 | 2 | Pin-Spring |
| 4 | 325-9 | 4 | Screw-HH |
| 5 | 110-4614 | 3 | Screw-HH |
| 6 | 105-1016 | 3 | Washer-Hardened |
| 8 | 115-2822 | 2 | Stomper Arm & Bearing ASM |
| 8:2 | 32151-76 | 1 | Ring-Retaining, Internal |
| 8:3 | 110-4557 | 1 | Spacer-Bearing |
| 8:4 | 110-4556 | 2 | Bearing-Ball |
| 11 | 110-4576 | 1 | Crankarm-No.6 |

| Ref. | Part Number | Qty. | Description |
|---|---|---|---|
| 13 | 115-4703 | 1 | Housing ASM |
| 13:2 | 105-1017 | 1 | Spacer |
| 13:3 | 105-0965 | 2 | Bearing-Ball |
| 15 | 110-4546 | 1 | Key-Square |
| 16 | 110-4572 | 1 | Crankarm-No. 3, 5, 7 |
| 17 | 110-4570 | 1 | Coupling-No.5 |
| 18 | 3296-53 | 2 | Nut-Lock, NI |
| 19 | 105-0974-03 | 1 | Plate-Coupling |
| 20 | 105-0963 | 2 | Mount-ISO, Crank |
| 21 | 325-6 | 4 | Screw-HH |
| 22 | 327-29 | 2 | Screw-HH |
| 23 | 110-4549 | 2 | Washer-Snubbing |

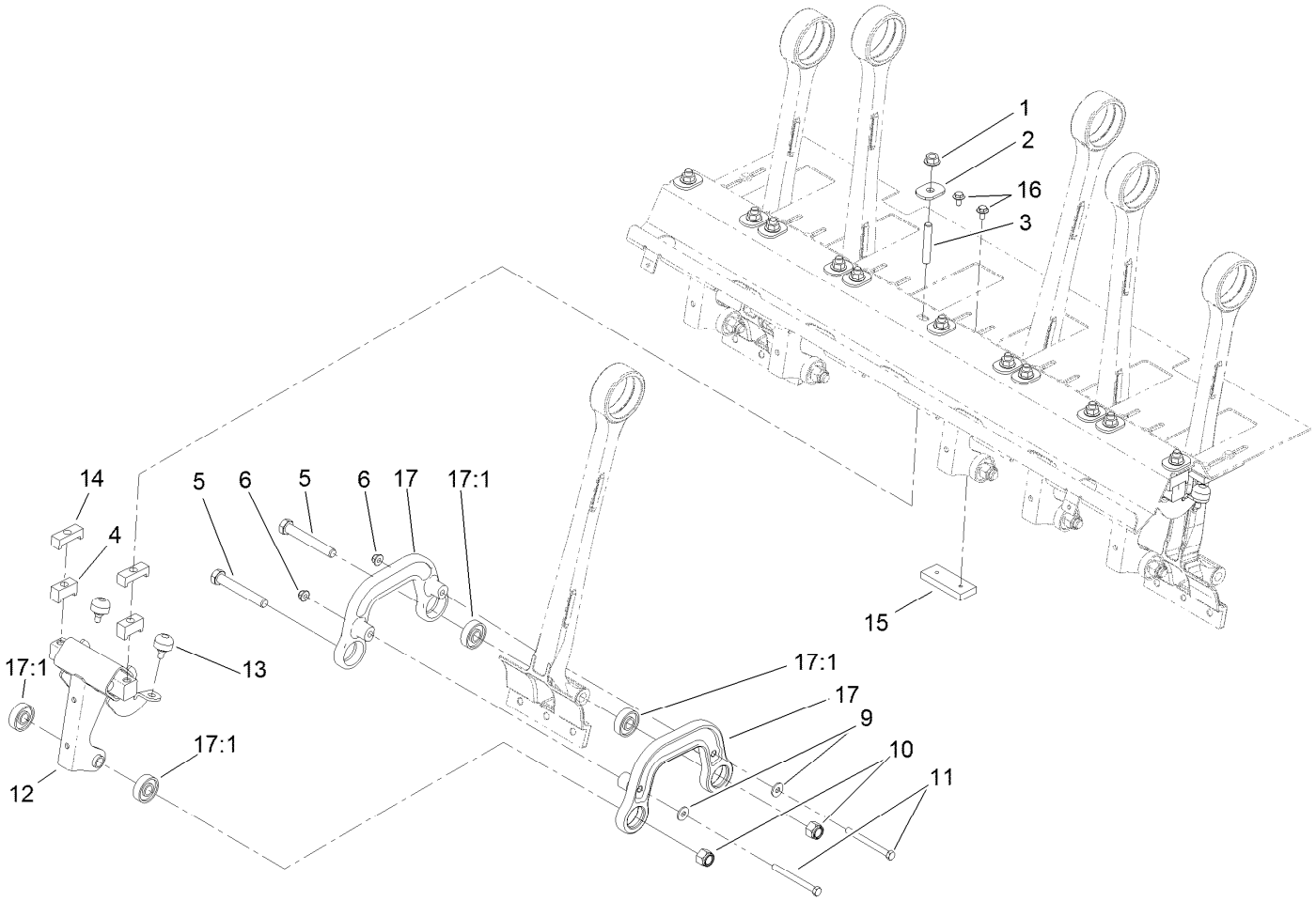


# Coring Head Assembly for Rotolinks

| Ref. | Part Number | Qty. | Description |
|---|---|---|---|
| 1 | 32128-23 | 12 | Nut-HF |
| 2 | 107-7543 | 12 | Washer-Hardened |
| 3 | 110-4504 | 12 | Stud |
| 4 | 131-4805 | 12 | Standoff-Damper |
| 5 | 327-29 | 12 | Screw-HH |
| 6 | 104-8301 | 12 | Nut-HF, NI |
| 9 | 80-6990 | 12 | Washer-Hardened |
| 10 | 3296-53 | 12 | Nut-Lock, NI |

| Ref. | Part Number | Qty. | Description |
|---|---|---|---|
| 11 | 323-16 | 12 | Screw-HH |
| 12 | 131-4800 | 6 | Damper ASM |
| 13 | 87-2440 | 12 | Bumper-Rubber |
| 14 | 107-7582 | 12 | Spacer-Damper, Top V |
| 15 | 107-7584 | 7 | Plate-Bumper V |
| 16 | 3234-7 | 14 | Screw-HHF |
| 17 | 140-6194 | 12 | Link ASM-Damper |
| 17:1 | 251-311 | 2 | Bearing-Ball |

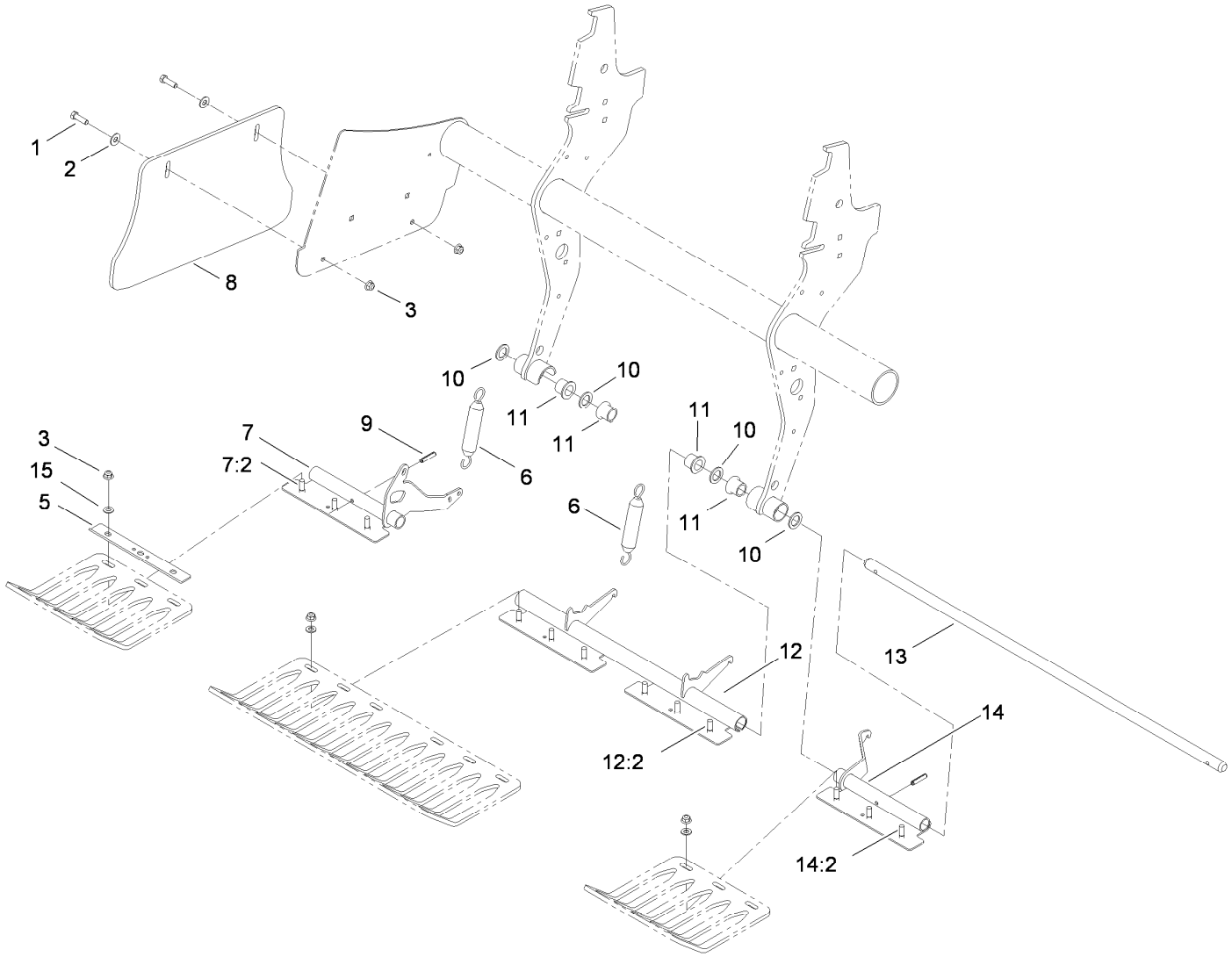


# Coring Head Assembly for Turfguards

| Ref. | Part Number | Qty. | Description |
|---|---|---|---|
| 1 | 323-7 | 4 | Screw-HH |
| 2 | 3256-4 | 4 | Washer-Flat |
| 3 | 104-8301 | 16 | Nut-HF, NI |
| 5 | 110-4274-03 | 4 | Clamp-Guard, Turf |
| 6 | 66-4270 | 2 | Spring-Extension |
| 7 | 140-6451 | 1 | Bracket ASM-Turf Guard, LH |
| 7:2 | 125-3318 | 3 | Screw-Neck, Rib |
| 8 | 105-1069 | 2 | Shield-Side |
| 9 | 32121-25 | 2 | Pin-Roll |

| Ref. | Part Number | Qty. | Description |
|---|---|---|---|
| 10 | 3-7898 | 4 | Washer-Thrust |
| 11 | 107-7581 | 4 | Bushing-Flange, Keyed |
| 12 | 140-6460 | 1 | Bracket ASM-Turf Guard, Center |
| 12:2 | 125-3318 | 6 | Screw-Neck, Rib |
| 13 | 105-1024 | 1 | Shaft-Guard, Turf |
| 14 | 140-6450 | 1 | Bracket ASM-Turf Guard, RH |
| 14:2 | 125-3318 | 3 | Screw-Neck, Rib |
| 15 | 3256-24 | 12 | Washer-Plain |

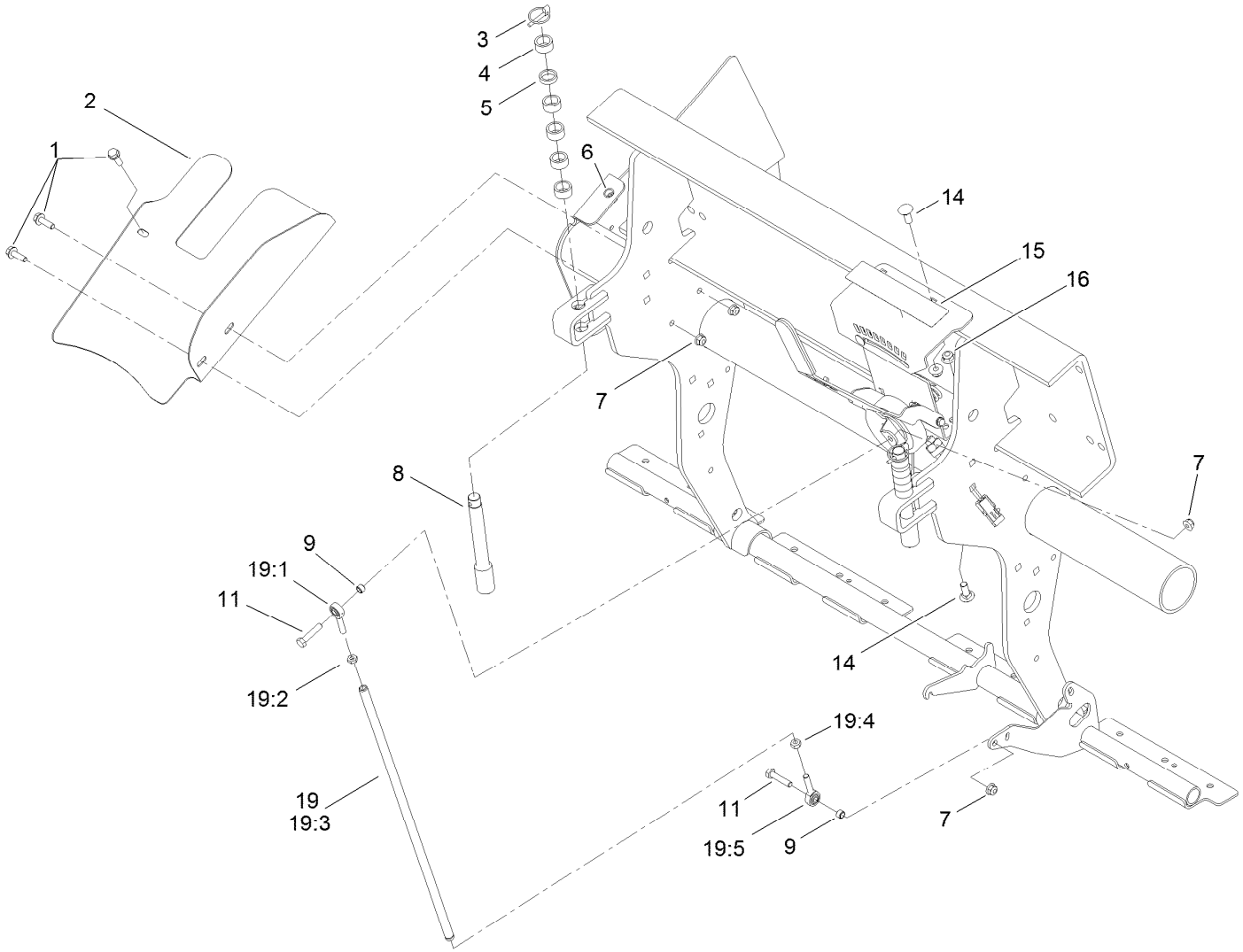


# Depth Control Assembly

| Ref. | Part Number | Qty. | Description |
|---|---|---|---|
| 1 | 3234-17 | 3 | Screw-HHF |
| 2 | 105-1092-01 | 1 | Shield-Top, Belt |
| 3 | 3290-495 | 2 | Pin-Klik |
| 4 | 74-3730 | 10 | Spacer-Spindle, Rear |
| 5 | 105-3828 | 2 | Spacer |
| 6 | 32148-7 | 1 | Nut-Clinch |
| 7 | 104-8300 | 4 | Nut-HF, NI |
| 8 | 105-1004 | 2 | Pin-Stop, Depth |
| 9 | 92-3133 | 2 | Spacer-Lever, Traction |
| 11 | 322-7 | 2 | Screw-HH |

| Ref. | Part Number | Qty. | Description |
|---|---|---|---|
| 14 | 3231-2 | 4 | Bolt-CARR |
| 15 | 106-8853 | 1 | Decal-Control, Depth |
| 16 | 104-8301 | 4 | Nut-HF, NI |
| 19 | | 1 | Link ASM ● |
| 19:1 | 2411-52 | 1 | Bearing-Rod End, RH |
| 19:2 | 3220-2 | 1 | Nut-Jam |
| 19:3 | 105-1067 | 1 | Tube-Control, Depth |
| 19:4 | 3220-20 | 1 | Nut-Jam |
| 19:5 | 2411-53 | 1 | Bearing-Rod End, LH |

● Not serviced separately

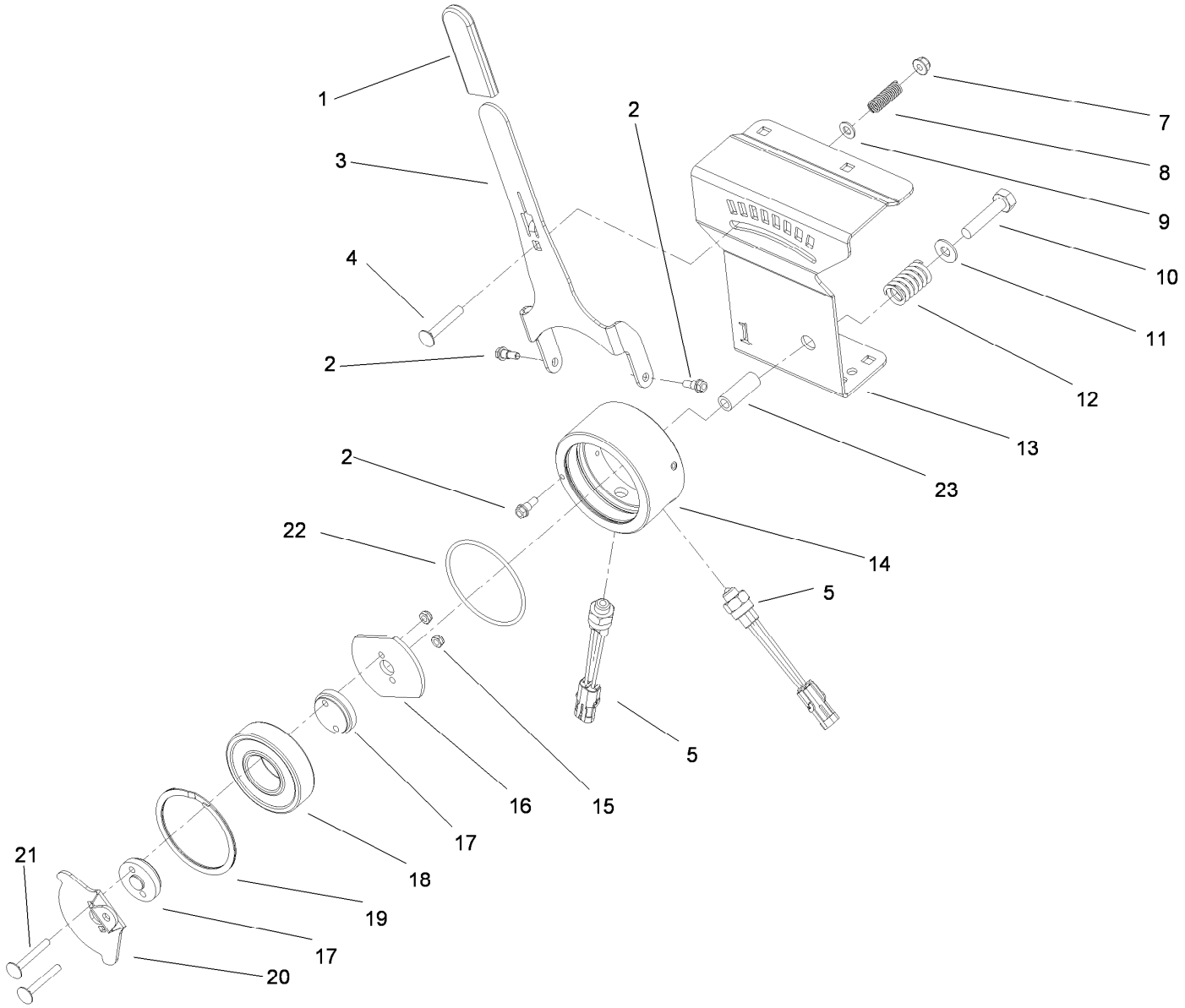


# Depth Actuator Assembly

| Ref. | Part Number | Qty. | Description |
|---|---|---|---|
| 1 | 21-1880 | 1 | Grip-Handle |
| 2 | 42-3560 | 3 | Bolt-Shoulder |
| 3 | 106-8860-03 | 1 | Arm-Control, Depth |
| 4 | 3230-6 | 1 | Bolt-CARR |
| 5 | 72-4320 | 2 | Switch-Ball |
| 7 | 104-8300 | 1 | Nut-HF, NI |
| 8 | 95-1821 | 1 | Spring-Compression |
| 9 | 3256-23 | 1 | Washer-Plain |
| 10 | 322-11 | 1 | Screw-HH |
| 11 | 3256-4 | 1 | Washer-Flat |
| 12 | 66-9010 | 1 | Spring-Compression |

| Ref. | Part Number | Qty. | Description |
|---|---|---|---|
| 13 | 106-8865-03 | 1 | Support-Control, Depth |
| 14 | 108-2129 | 1 | Housing-Control, Depth |
| 15 | 3296-56 | 2 | Nut-Lock, NI |
| 16 | 106-8864 | 1 | Actuator-Switch |
| 17 | 106-8863 | 2 | Spacer-Control, Depth |
| 18 | 106-8871 | 1 | Bearing-Ball |
| 19 | 106-8872 | 1 | Ring-Retaining |
| 20 | 106-8861-03 | 1 | Arm-Actuator, Switch |
| 21 | 3230-33 | 2 | Screw-CARR |
| 22 | 237-33 | 1 | O-Ring |
| 23 | 95-6448 | 1 | Spacer |

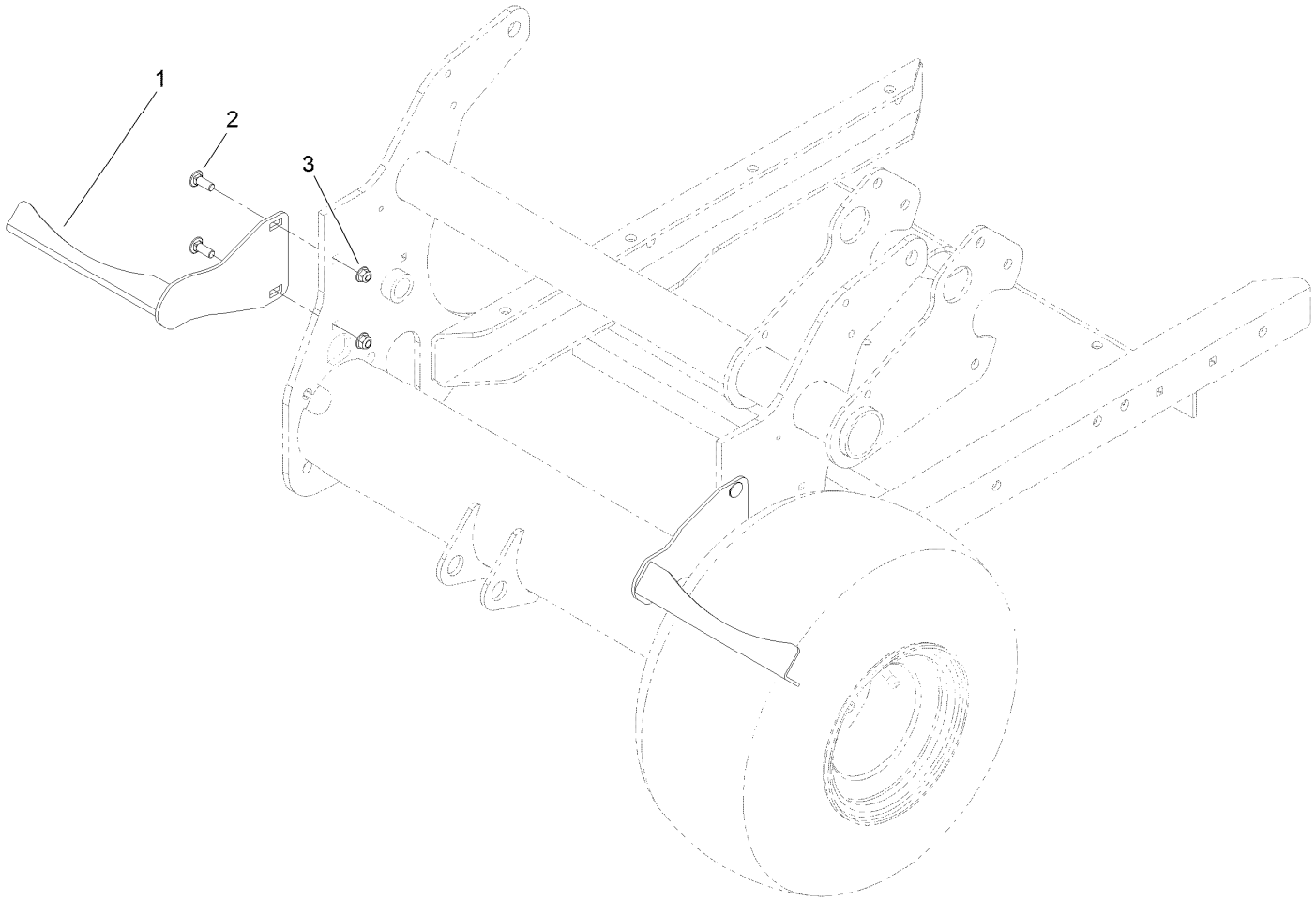


# Optional Tire Scraper Assembly (Model 09225)

| *Ref.* | *Part Number* | *Qty.* | *Description* |
|---|---|---|---|
| 1 | 107-7531-03 | 2 | Scraper-Wheel |
| 2 | 3231-26 | 4 | Screw-CARR |
| 3 | 104-8301 | 4 | Nut-HF, NI |

# Attachments and Accessories

## For 09200 ProCore 648 Aerator

| Product Name | Model/Part |
|---|---|
| Windrower Kit | 09220 |
| Tire Scraper Kit | 09225 |
| Rear Roller Kit | 09234 |
| Four-Tine Head Quick Lock | 09719 |
| 2 x 5 Mini Tine Head | 09736 |
| 1 x 6 Mini Tine Head | 09737 |
| Needle Tine Head | 09739 |
| 3/4in Three-Tine Head | 09794 |
| 3/4in Four-Tine Head | 09796 |
| 7/8in Three-Tine Head | 09797 |
| Yellow Hydraulic Fluid Cap (Tethered) | 107-2174 |
| Premium Transmission/Hydraulic Tractor Fluid (55 Gallon Drum) | 108-1183 |
| Premium Transmission/Hydraulic Tractor Fluid (5 Gallon Pail) | 108-1184 |
| Premium All Purpose Grease (Tube) | 108-1190 |
| Sleeve Tool ASM | 114-0590-01 |
| Myturf Wireless Hour Assembly (pc648) | 115-2833 |
| Inline Fuel Filter | 115-7854 |
| Turf Guard 3 Tine (Short) | 120-1044 |
| Turf Guard 4 Tine (Short) | 120-1045 |
| 4-Tine Turf Guard (long) | 120-1046 |
| Turf Guard 5 Tine (Short) | 120-1047 |
| Turf Guard 6 Tine (Short) | 120-1050 |
| 3-Tine Turf Guard (long) | 120-1051 |
| 5-Tine Turf Guard (long) | 120-1052 |
| 6-Tine Turf Guard (long) | 120-1053 |
| Premium Engine Oil 10w30 (55 Gallon Drum) | 121-6392 |
| Premium Engine Oil 10w30 (5 Gallon Pail) | 121-6393 |
| Head Bearing Kit | 131-4876 |
| Exhaust Silencer Screen | 93-9911 |

**Notes:**

**Notes:**

TORO®

Count on it.