Motor Relief Kit

STX-26 Stump Grinder

Model No. 163–5271

Installation Instructions

Preparing the Machine

1. Park the machine on a level surface.
2. Turn on the machine.
3. Raise the cutter head until a jack stand can fit underneath.
4. Place a jack stand underneath the cutter head frame and lower the frame on to the jack stand.
5. Turn off the machine. Wait until all moving parts have stopped and machine has cooled.
6. Remove the key from the machine.
7. Disconnect the battery.
8. Place a drip pan underneath the hydraulic motor.

Replacing the Hydraulic Motor

Retain all parts unless noted.

1. Mark the hydraulic hoses to indicate the hose position.
2. Disconnect the hydraulic hoses and plug the hoses. Clean any spilled fluid.

© 2024—The Toro® Company
8111 Lyndale Ave So
Bloomington, MN 55044

Register at
www.Toro.com

Original Instructions (EN)
Printed in the USA
All rights reserved

3470-746 A

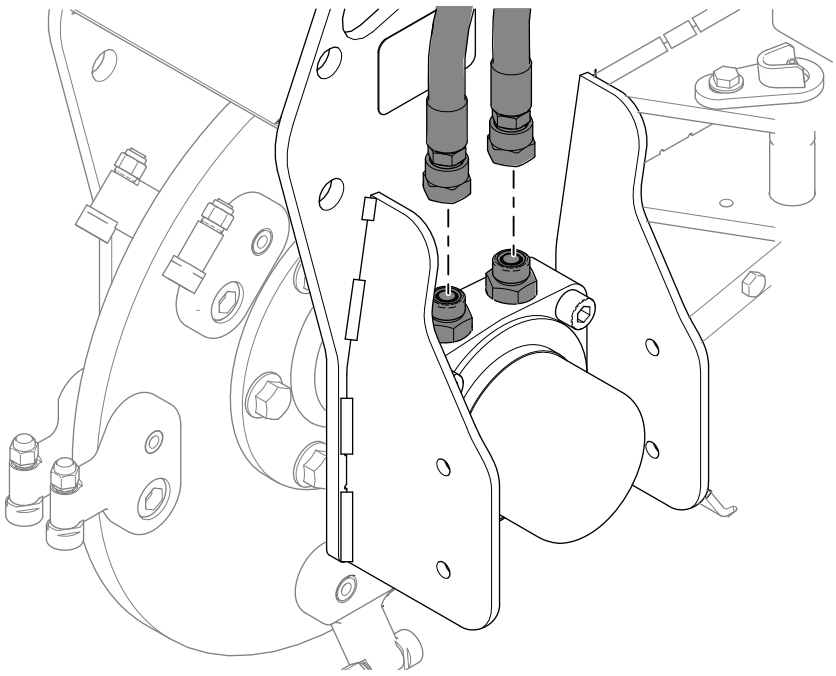

G516047

3. Remove the hydraulic fittings.

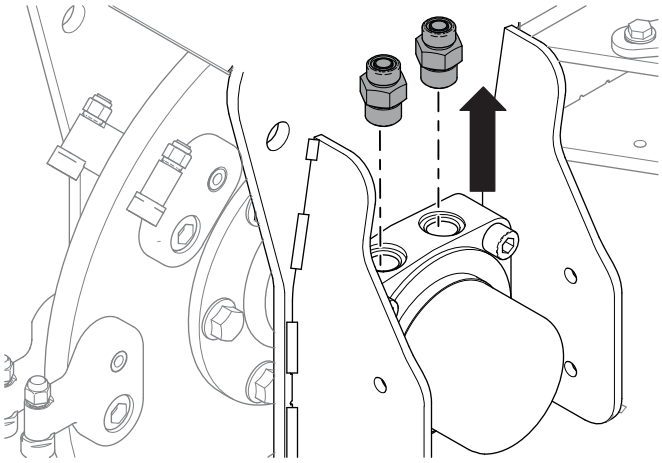

G516046

4. Break loose the 6 drive hub nuts and bolts. Do not remove them yet.

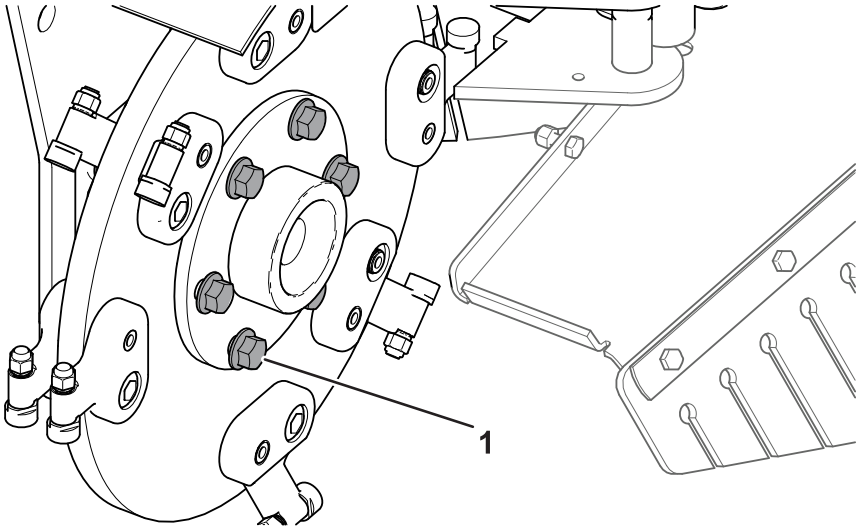

G517214

(1) Drive hub bolt

5. Remove the 4 bearing nuts and bolts.

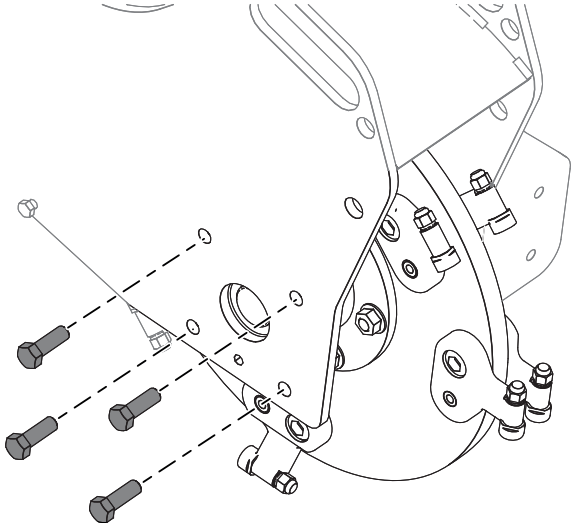

G516043

6. Remove the 4 hydraulic–motor mounting bolts.

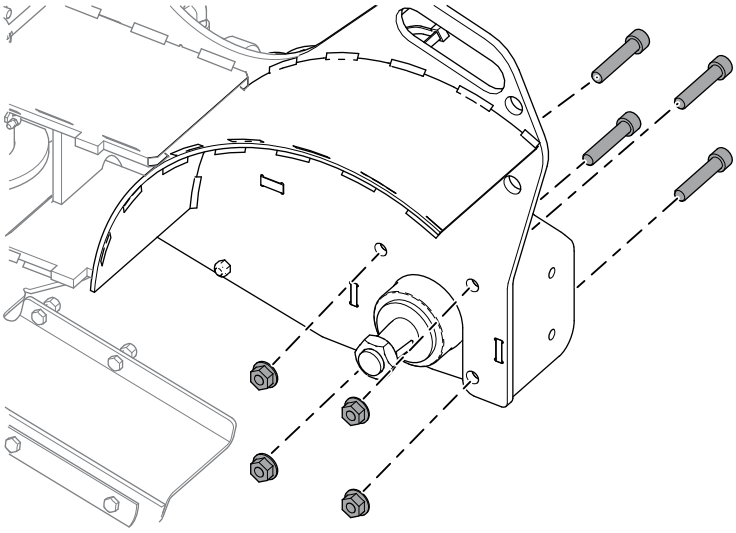

G516048

⚠ WARNING ⚠

Heavy object, to avoid muscle strain or back injury, use lifting aids and proper lifting techniques when removing or replacing heavy objects.

---

7. Remove the bearing, drive hub, and cutter wheel from the grinder frame.

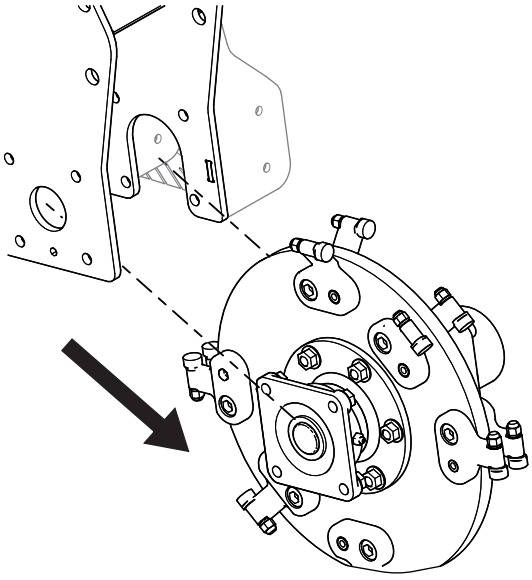

G516040

8. Remove the 6 bolts and nuts from the cutter head and separate the hub from the cutter wheel on the motor side.

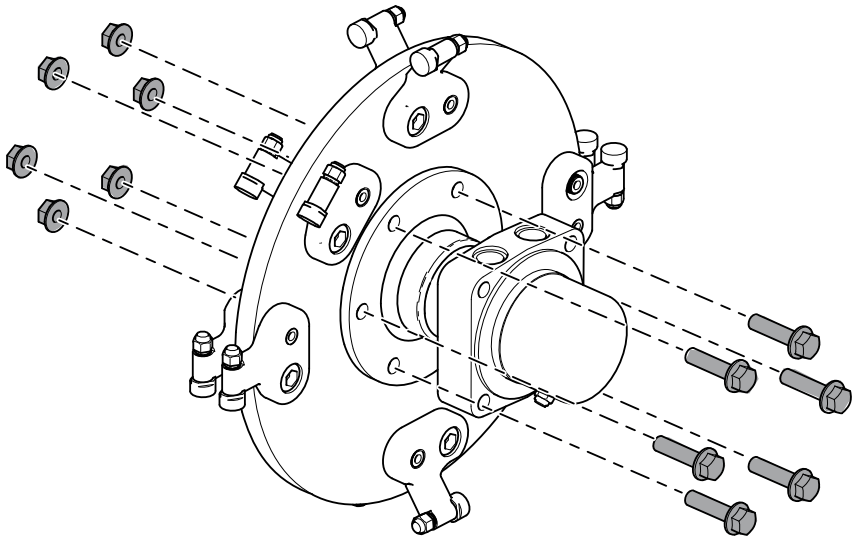

G516289

9. Using a vice, secure the motor and remove the nut from the cutter head.

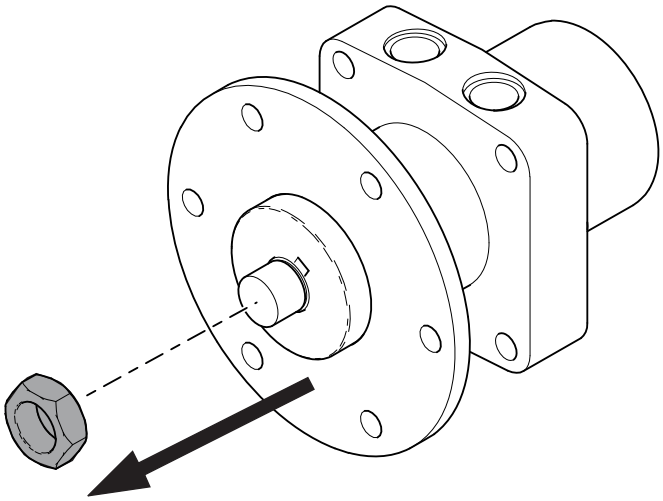

G516288

10. Remove the drive hub from the motor and discard the motor.

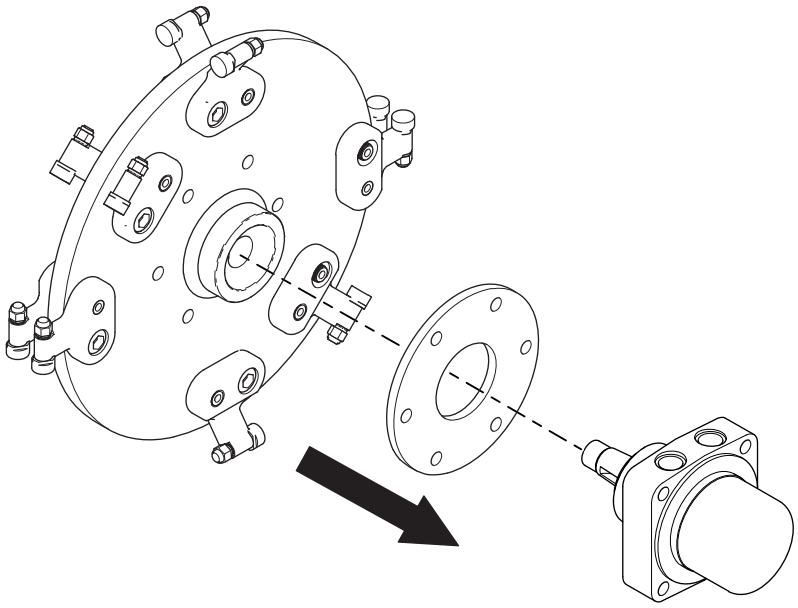

G516050

11. Using a vice, secure the motor and Install the drive hub on to the new motor over the woodruff key.

    Note: If the new motor does not have a woodruff key, the previous motor key can be used.

12. Install the nut on to the new motor and drive hub. Torque to **339 to 475 N·m (250 to 350 ft-lb)**.

13. Assemble the drive hub, cutter head, bearing, and motor assembly using the 6 previously removed nuts and bolts. Torque to **101 N·m (75 ft-lb)** in a star pattern. Ensure that the cutter head dimples are facing the bearing side.

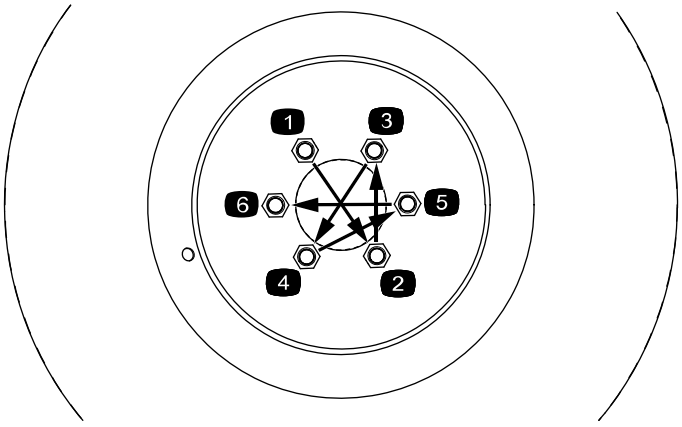

G516259

14. Install the cutter assembly on to the machine. Install the motor side first. Ensure that the grease fitting and the 2 hydraulic ports on the motor are facing up. Torque the 4 hydraulic motor nuts to **142 N·m (105 ft-lb)**.



15. Install the 4 bearing nuts and bolts. Torque the nuts to **101 N·m (75 ft-lb)**.

16. Install the hydraulic fittings into the motor. Torque the fittings to **136 N·m (100 ft-lb)**.

17. Remove the plugs from the hydraulic hoses and install the hoses on to the hydraulic fittings. Use a backup wrench to limit hose twisting. Torque the hoses to **54 to 60 N·m (40 to 44 ft-lb)**.

Replacing the Cutting Relief Valve

Retain all parts unless noted.

1. Remove the traction control and reference handle.

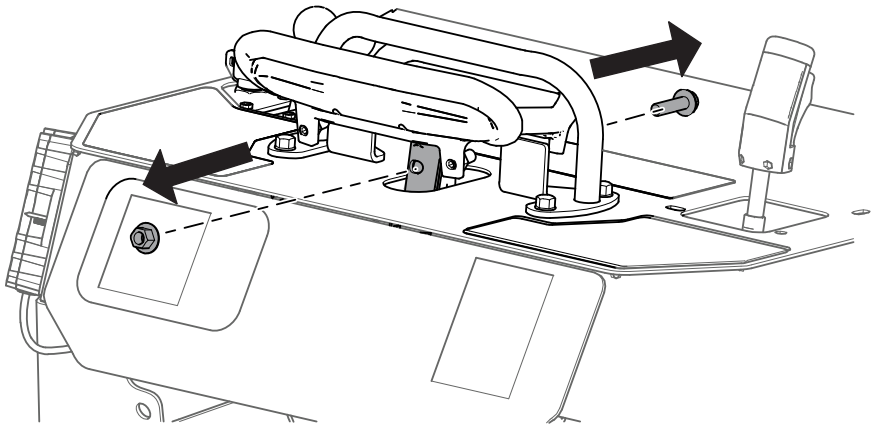

G516286

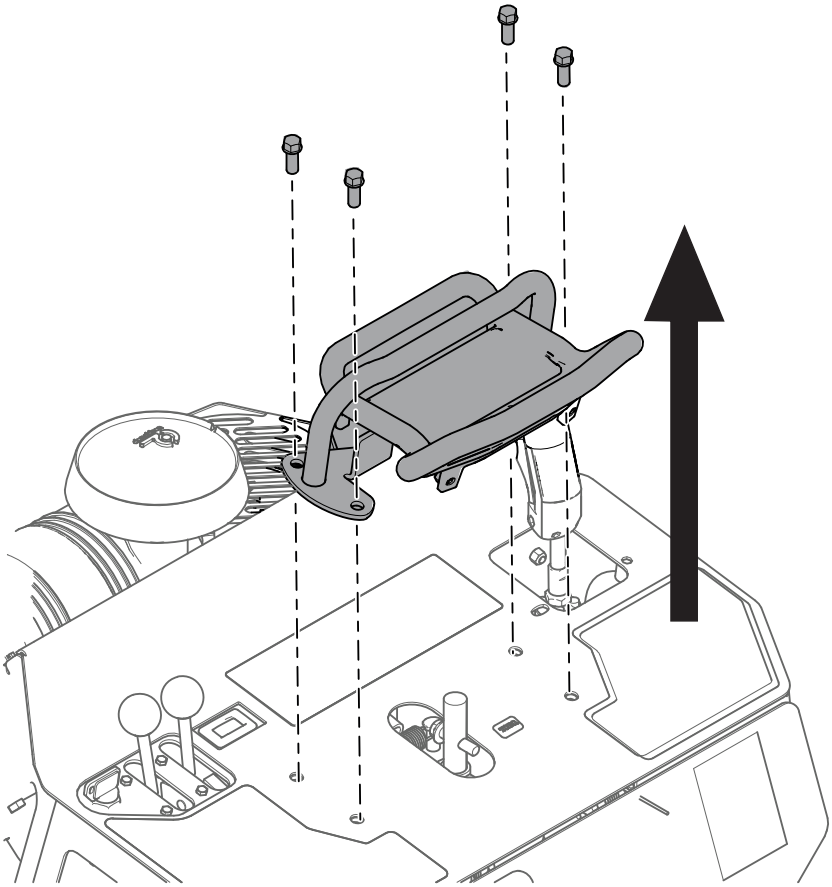

G516290

2. Remove the control panel plate and locate the cutting relief valve (SRV).

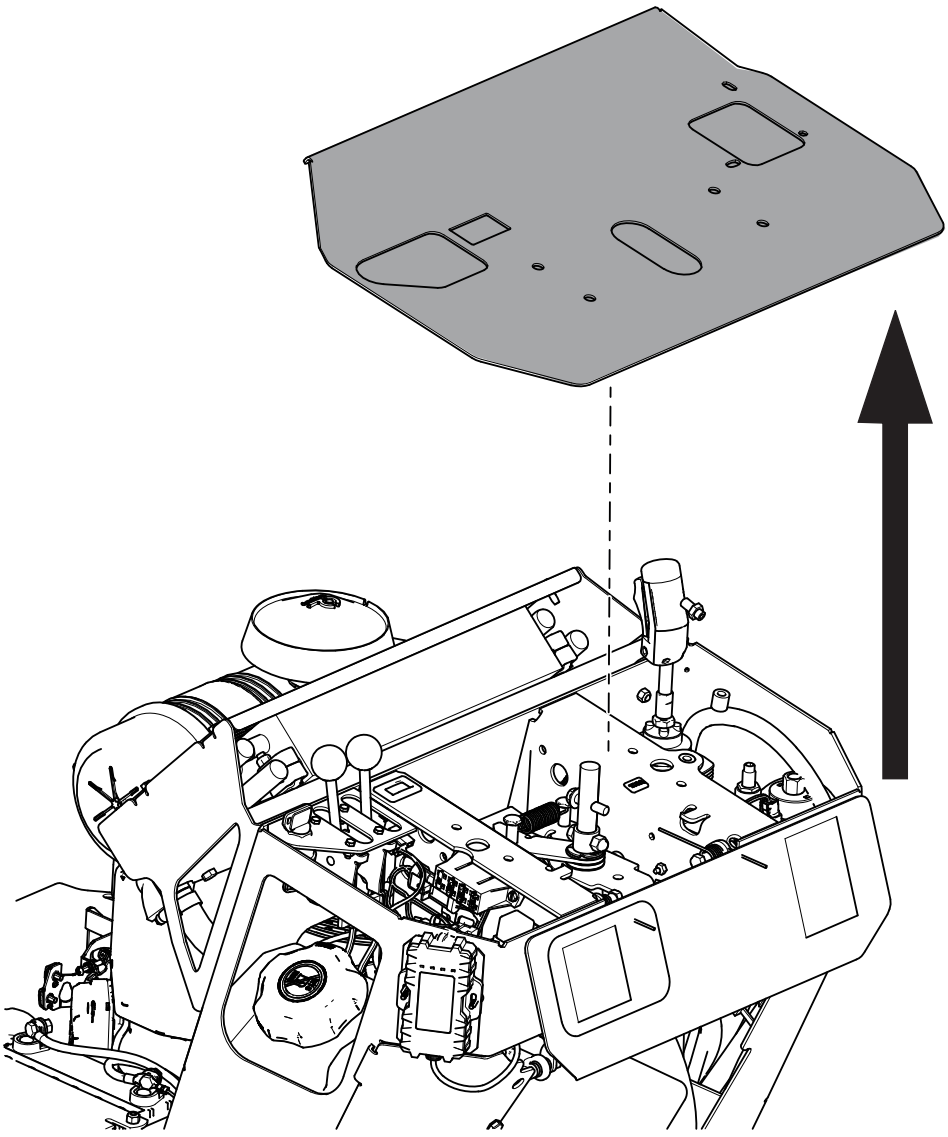

G516287

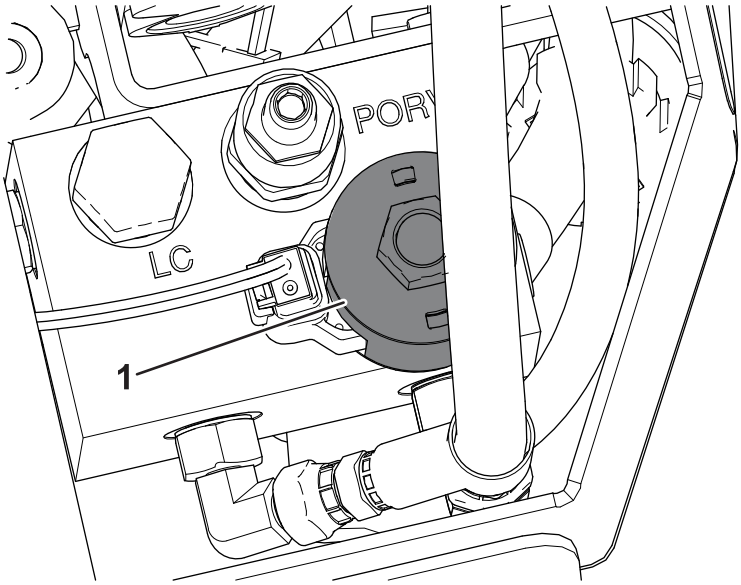

G517216

(1) Cutting relief valve (SRV)

3. Disconnect the Deutsch connector.

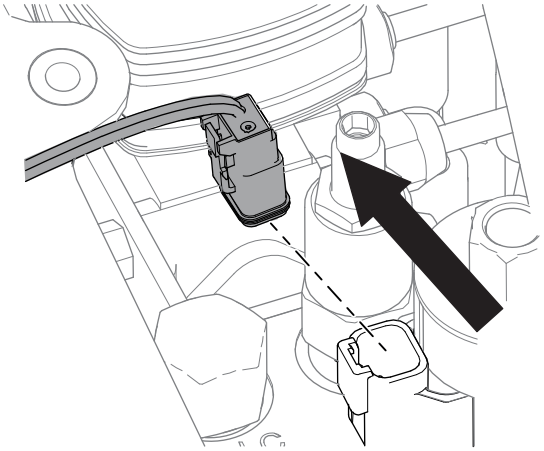

G516045

4. Remove the coil nut, solenoid coil, and existing relief cartridge. Discard the relief cartridge.

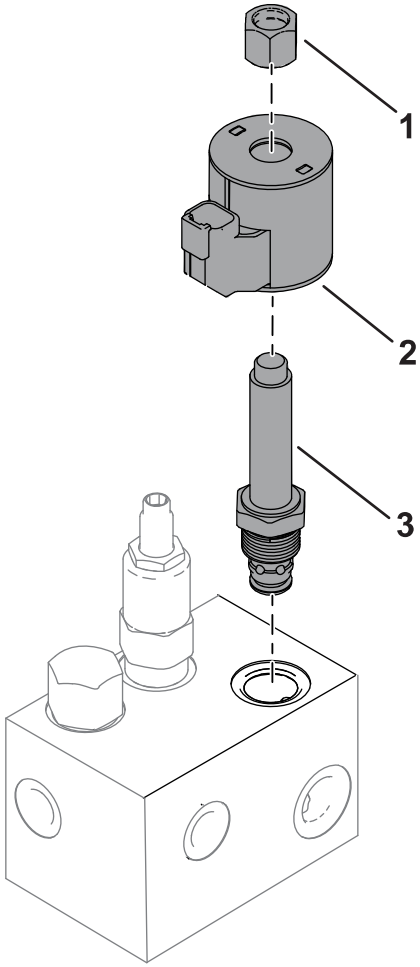

G517217

1. Coil nut
2. Solenoid coil
3. Cutting relief cartridge

5. Install the new relief valve into the SRV port. Torque to **34 N·m (25 ft-lb)**.
6. Install the previously removed solenoid coil and coil nut. Torque the coil nut to no more than **56 N·cm (5 in-lb)**. **Do not over tighten.**
7. Connect the Deutsch connector.
8. Install the control panel plate.
9. Install the traction control handle. Ensure that the handle and reference bar are in the correct orientation, with the longer side facing the operator.

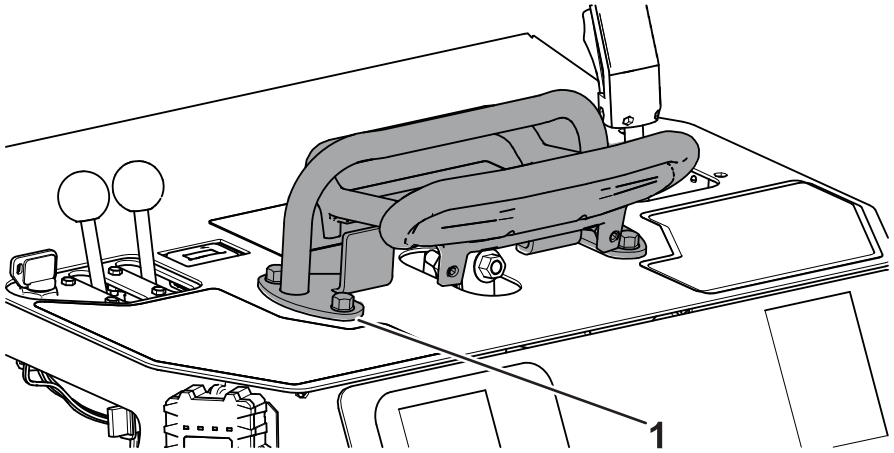

G517215

(1) Reference bar

Adjusting the Intellisweep Manifold

1. Remove the cover plate.

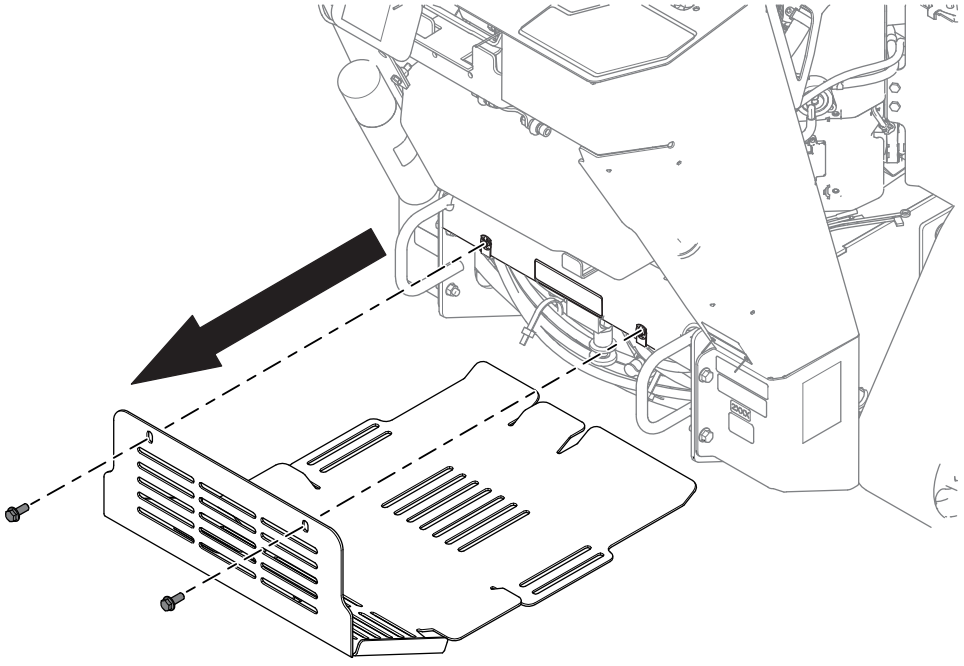

G516049

2. Locate the manual adjustment knob and mark the right side of the knob with a paint pen.

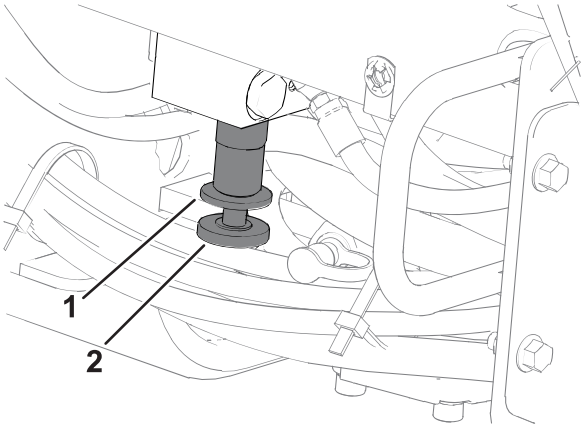

G517218

(1) Manual adjustment locknut

(2) Manual adjustment knob

3. Loosen the manual adjustment locknut by turning the valve to the left.
4. Rotate the manual adjustment knob 2.5 full rotations to the left. The paint pen mark should be on the left side of the knob when completed.
5. Tighten the manual adjustment locknut by turning it to the right.
6. Install the cover plate.
7. Check the hydraulic fluid level and ensure that the cutting head rotates properly and in the forward direction, refer to your *Operator's Manual*.

Notes:

Notes:


TORO®