Form No. 3470-878 Rev A

TORO®

Count on it.

Parts Catalog

Motor Relief Kit

STX-26 Stump Grinder

Model No. 163-5271

Register at www.Toro.com.
Original Instructions (EN)

CE

3470-878 A

Motor Relief Kit No. 163-5271

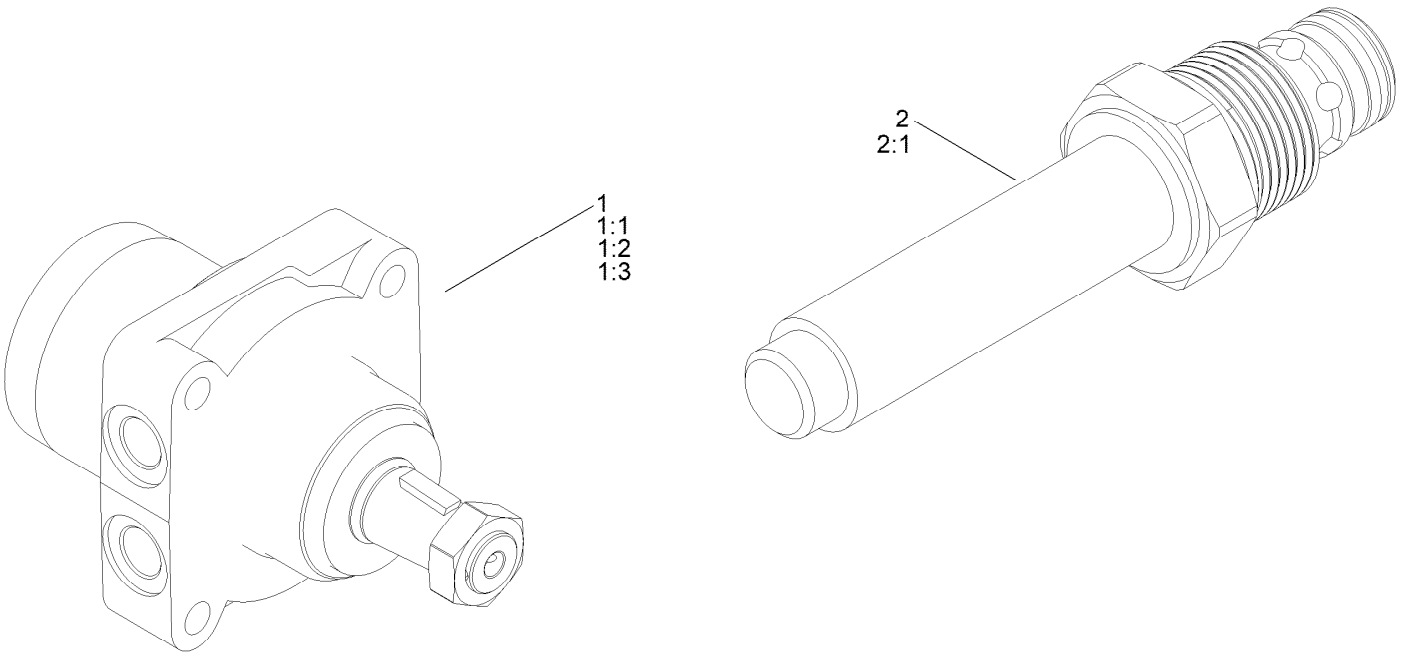

Motor Relief Kit No. 163-5271 (continued)

Ref.	Part Number	Qty.	Description
1	161-6872	1	HYD Motor ASM
1:1	3257-42	1	Key-Woodruff
1:2	119-4631	1	Seal Kit
1:3	106-8159	1	Nut-Hex Jam Lck
2	161-6878	1	Cartridge-Relief
2:1	110-6316	1	Seal Kit



Count on it.