Form No. 3470-900 Rev A

Count on it.

Parts Catalog

eS3000SD 72V

TORO® 76cm

Model No. 75500—Serial No. 321000867 and Up

Register at www.Toro.com.
Original Instructions (EN)

CE

3470-900 A

Ordering Replacement Parts

To order replacement parts, please supply the part number, the quantity, and the description of each part desired.

Understanding Reference Numbers

Each identified part in an illustration has a reference number. The reference number for a part also appears in the parts list, along with other information about the part.

This catalog uses two special reference number formats, one to indicate parts in a service assembly and another to indicate the quantity of a given part in an illustration.

Service Assembly Reference Numbers

Parts in service assemblies have reference numbers in the form a:b. The a represents the reference number of the entire service assembly and the b represents a sequential number unique to each part within the service assembly.

For example, a wheel assembly might be identified by reference number 6, the tire by 6:1, the valve by 6:2, and the wheel by 6:3. When you order the assembly identified by reference number 6, you receive all parts identified by reference numbers 6:1,6:2, and 6:3. However, you may also order any part individually. Reference numbers of this type appear in illustration and in parts lists.

Reference Numbers Indicating Quantity

In an illustration, if a reference number indicates more than one part, the reference number has the form nX y. The n represents the quantity of the part, the X is the multiplication symbol, and the y represents the reference number.

For example, in an illustration, the reference number 2X 37 means that two of the parts identified by reference number 37 are indicated.

Contents

Deck Assembly 4
Chassis Assembly 6
Transmission Assembly 8
Transmission Assembly No. 134-6166 10
Front Wheel Assembly 12
Steering Assembly 14
Steering Rack Assembly No. 134-6201 16
Steering Rod Assembly No. 134-6202 18
Body Styling Assembly 20
Battery Controller Assembly 22
Light Assembly 24
Seat Assembly 26
Deck Lift Assembly 28

© 2024—The Toro® Company
8111 Lyndale Avenue South
Bloomington, MN 55420

Contact us at www.Toro.com.
Printed in the USA.
All Rights Reserved

Deck Assembly

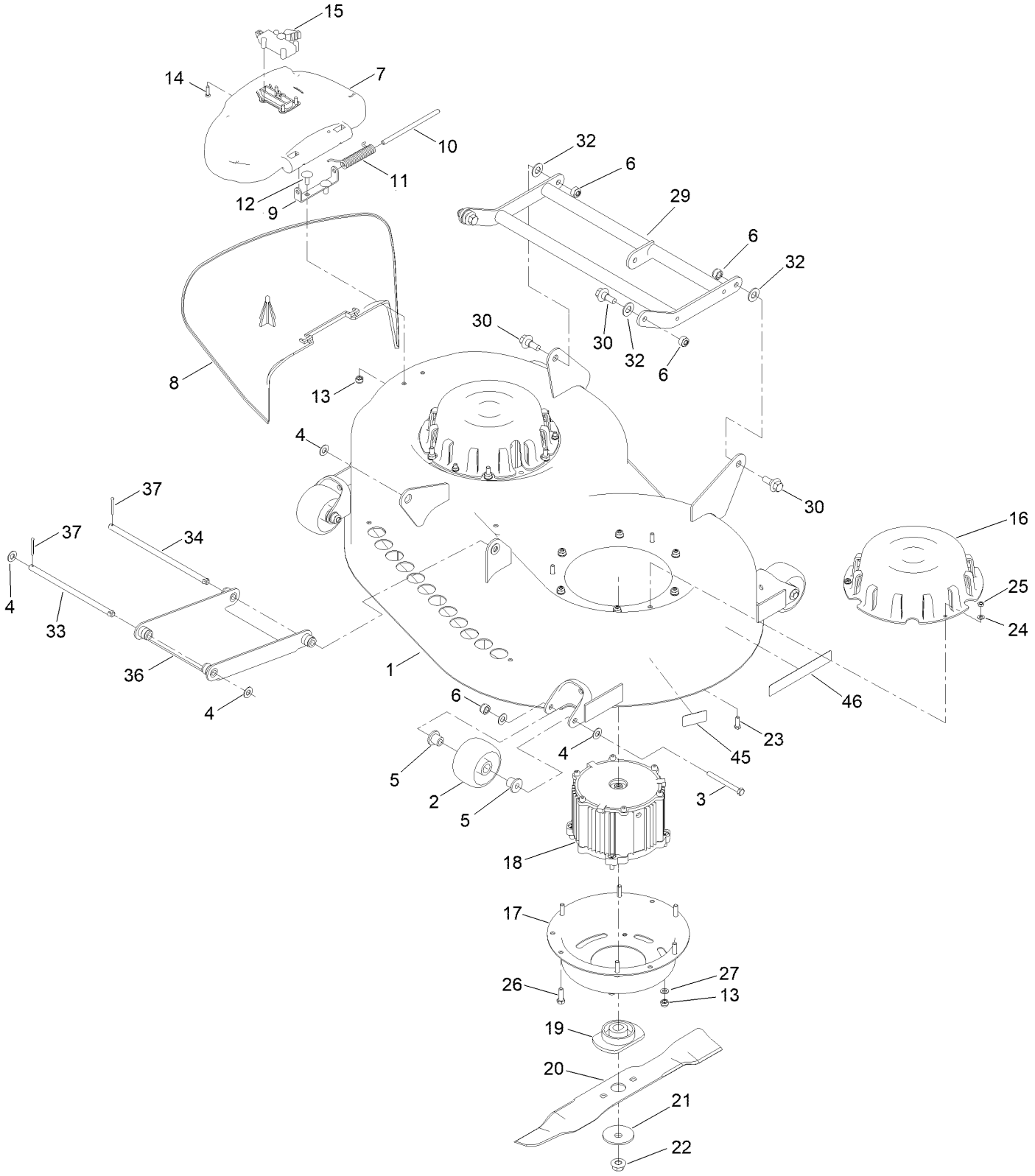

Deck Assembly (continued)

Ref.	Part Number	Qty.	Description
1	134-6133	1	Welded Deck ASM
2	134-5706	4	Wheel, Deck
3	09703	4	Bolt-HH
4	ZWP1H000U	12	Washer-Plain
5	134-5709	8	Insert, Deck Wheel
6	09441	8	Nut-Hex, NI
7	134-5712	1	Cover, Deck Chute
8	134-5378	1	Chute, Deck
9	134-5714	1	Bracket, Discharge Flap
10	134-5715	1	Rod, Discharge Flap
11	134-5716	1	Spring, Discharge Flap
12	09570	2	Bolt-Carriage
13	09438	22	Nut-Nyloc
14	134-5719	4	Bolt
15	134-6596	1	Deck Chute Clip, ASM
16	134-5721	2	Top Cover, Deck Motor
17	134-5722	2	Bottom Cover, Deck Motor
18	134-5723	2	Motor, Deck
19	134-5724	2	Hub, Blade Motor
20	134-5725	2	Blade, Deck
21	134-5726	2	Washer, Blade
22	134-5727	2	Nut, Blade
23	ZDH1E016U	6	Screw-HH
24	09470	6	Washer
25	09430	6	Nut-Nyloc
26	134-3739	12	Screw-HHF
27	ZWP1F000U	20	Washer
29	134-6145	1	Rear HOC Lifting ASM
30	134-7178	4	Bolt, Flange
32	09479	4	Washer-Plain
33	134-6148	1	Rod, Front Deck Moutning (Short)
34	134-5739	2	Rod, Front Deck Moutning
36	134-6149	1	Mounting Bracket ASM, Deck
37	134-5742	2	Pin, Split
45	134-6069	2	Decal - No Spray
46	134-6027	2	Decal - Deck Warning

Chassis Assembly

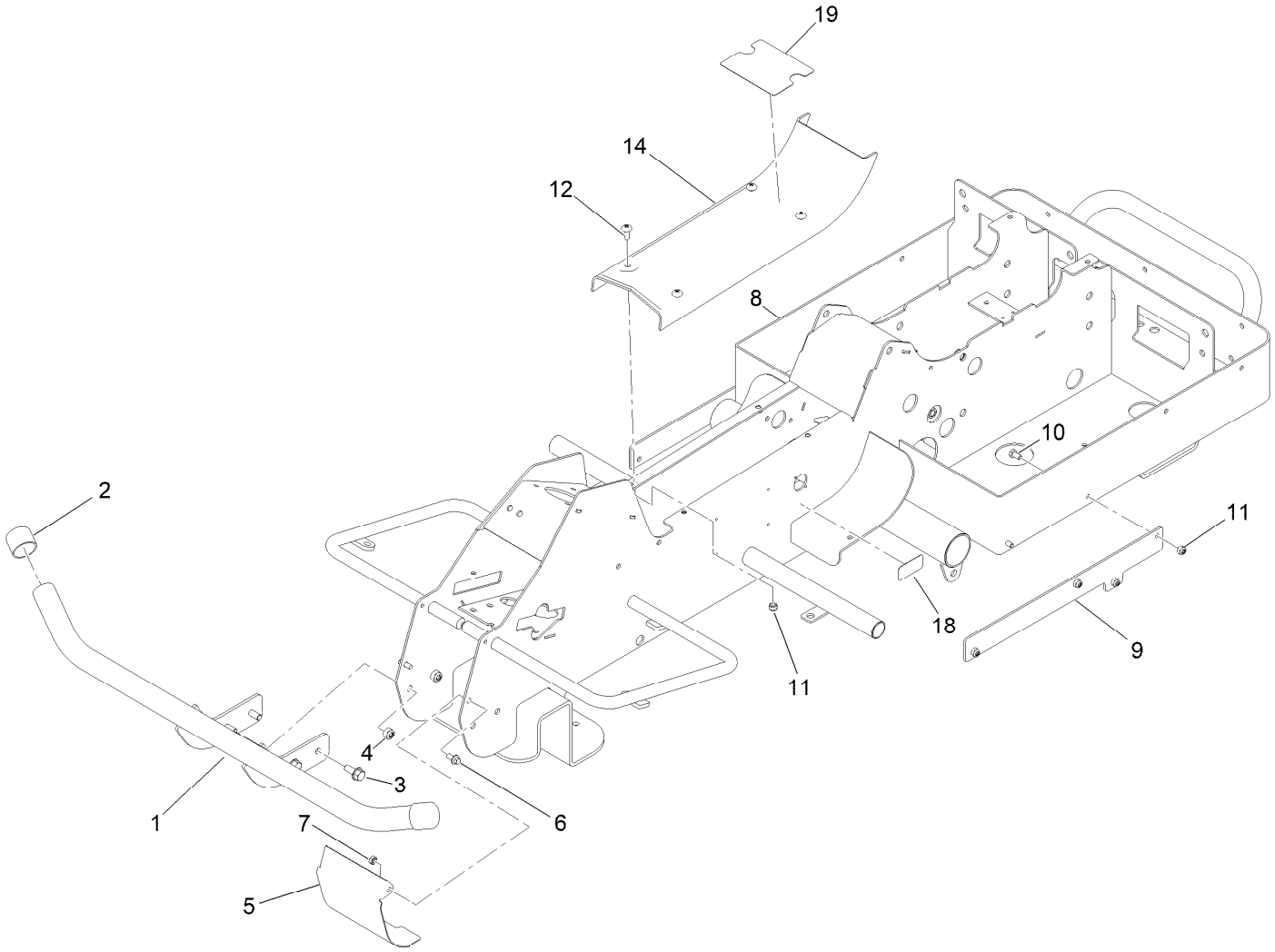

Chassis Assembly (continued)

Ref.	Part Number	Qty.	Description
1	134-6508	1	Bumper Bar, ASM
2	134-5745	2	Cap, Bumper Bar
3	134-3746	4	Screw-HHF
4	09441	4	Nut-Hex, NI
5	134-5748	1	Front Plate, Main Chassis
6	134-5749	2	Bolt, Flange
7	134-5750	2	Nut
8	134-6297	1	Chassis ASM
9	134-5752	2	Mounts, Side Pannel
10	09361	4	Screw-HH
11	09438	12	Nut-Nyloc
12	134-7193	4	Bolt
14	134-5756	1	Top Cover, Chassis
18	134-6026	1	Decal - Charging Port
19	134-6031	1	Decal - Danger

Transmission Assembly

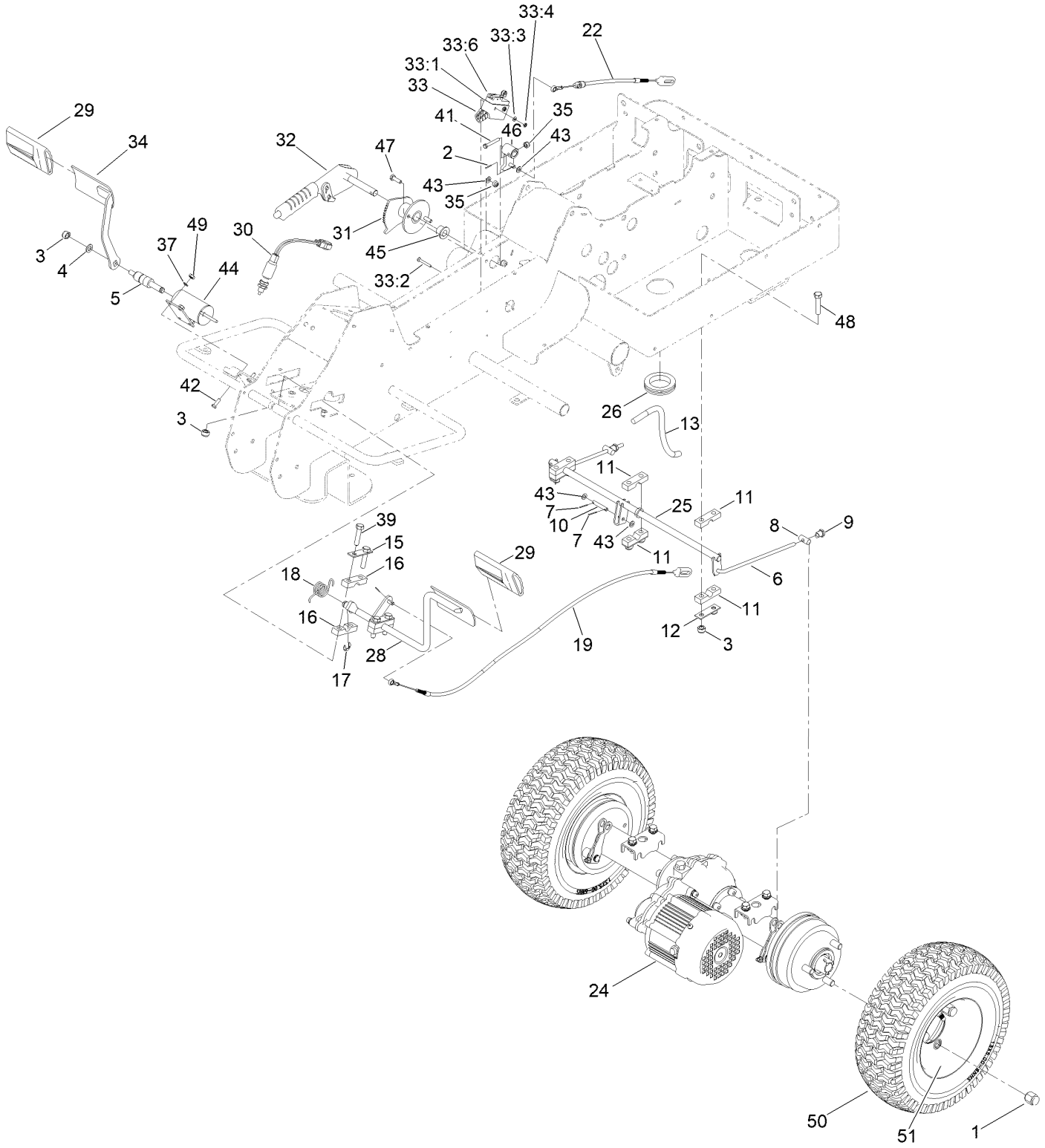

Transmission Assembly (continued)

Ref.	Part Number	Qty.	Description
1	134-5761	6	Nut
2	134-6306	1	Bobby Pin
3	09441	11	Nut-Hex, NI
4	134-6465	1	Washer
5	134-6466	1	Shaft, Throttle
6	134-5786	2	Rod, Brake Connection
7	134-5787	5	Bobby Pin
8	134-5788	2	Pin, Brake Connection (Flat)
9	134-5789	2	Nut , Brake Adjustment
10	134-5791	1	Pin, Brake Cable
11	134-5792	6	Mounting, Brake Rod
12	134-5793	3	Plate, Brake Mouting
13	134-5796	1	Cover, Wire
15	134-5812	2	Plate, Pedal Mouting
16	134-5813	4	Block, Pedal Holder
17	134-5814	2	Clip
18	134-5815	1	Spring, Pedal
19	134-6506	1	Cable, Pedal Brake
22	134-6507	1	Cable, Hand Brake
24	134-6166	1	Transmission Assembly
25	134-6178	1	Rear Transision ASM
26	134-6182	1	Insert, Wire (Small)
28	134-6184	1	Brake Pedal ASM
29	134-6188	2	Cover, Pedal
30	134-6189	1	Braking Switch ASM
31	134-6193	1	Hand Brake, Hub ASM
32	134-6196	1	Hand Brake, Handle ASM
33	134-6200	1	Switch ASM
33:1	134-5831	1	Cover, Switch
33:2	134-5832	2	Bolt
33:3	09658	2	Washer
33:4	134-5834	2	Nut
33:6	134-6473	1	Housing, Braking Switch
34	134-6458	1	Pedal Throttle
35	09438	1	Nut-Nyloc
37	09470	4	Washer
39	09631	4	Bolt
41	ZBH1E035U	1	Bolt
42	ZDH1E016U	4	Screw-HH
43	ZWP1F000U	4	Washer
44	134-6514	1	Throttle Sensor
45	134-6471	1	Bushing, Parking Brake
46	134-6472	1	ASM, Switch Pivot
47	09363	2	Screw-HH
48	09681	6	Bolt
49	134-7225	4	Nut
50	134-6164	2	Tyre, Wheel
51	134-7214	2	Hub, Rear Wheel

Transmission Assembly No. 134-6166

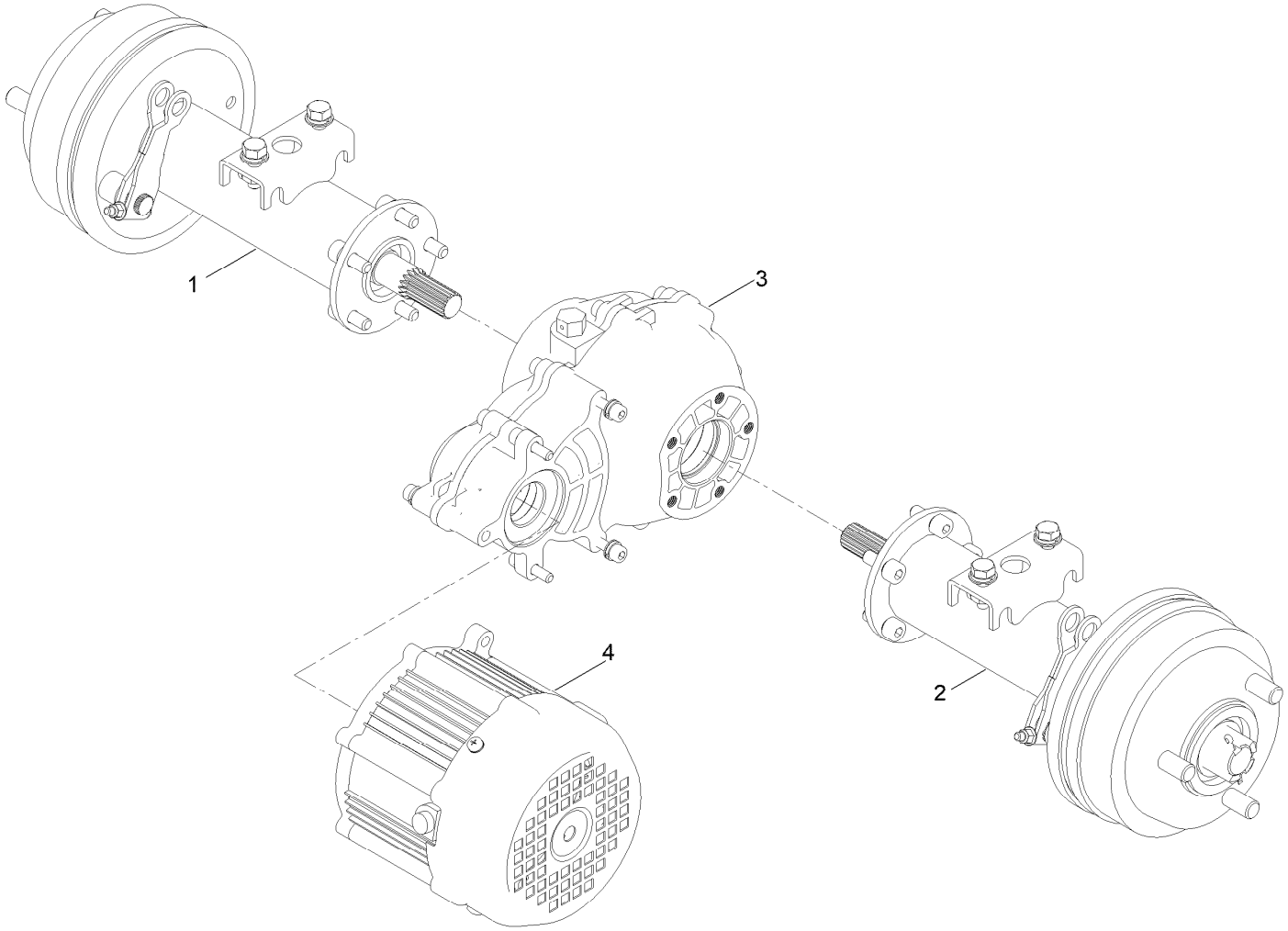

Transmission Assembly No. 134-6166 (continued)

Ref.	Part Number	Qty.	Description
1	134-6167	1	Semi Axle ASM (RH)
2	134-6172	1	Semi Axle ASM (LH)
3	134-6304	1	Reduction Gearbox ASM
4	134-6177	1	Rear Motor ASM

Front Wheel Assembly

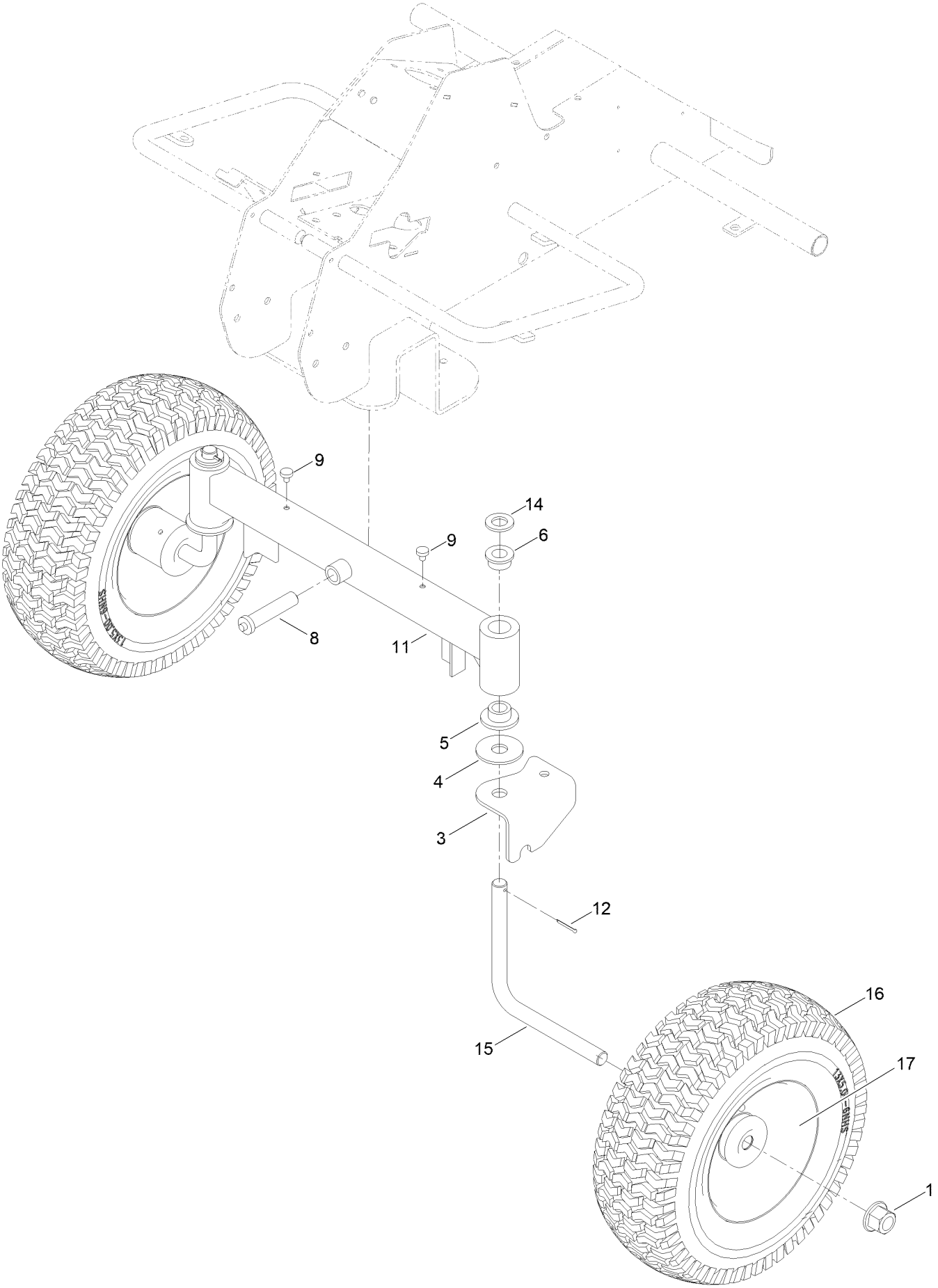

Front Wheel Assembly (continued)

Ref.	Part Number	Qty.	Description
1	134-3765	2	Nut-Flange, NI
3	134-6598	1	Mount Front Wheel
4	134-5802	2	Washer
5	134-5803	2	Bottom Bush, Axle
6	134-5804	2	Top Small Bush, Axle
8	134-5807	1	Pin, Front Axle Tilt
9	134-5808	2	Stopper, Front Axle Tilt

Ref.	Part Number	Qty.	Description
11	134-6183	1	Front Axle ASM
12	134-5742	2	Pin, Split
14	134-6450	2	Washer
15	134-6597	1	Mount Front Wheel
16	134-6164	2	Tyre, Wheel
17	134-7218	2	Hub, Wheel (Front)

Steering Assembly

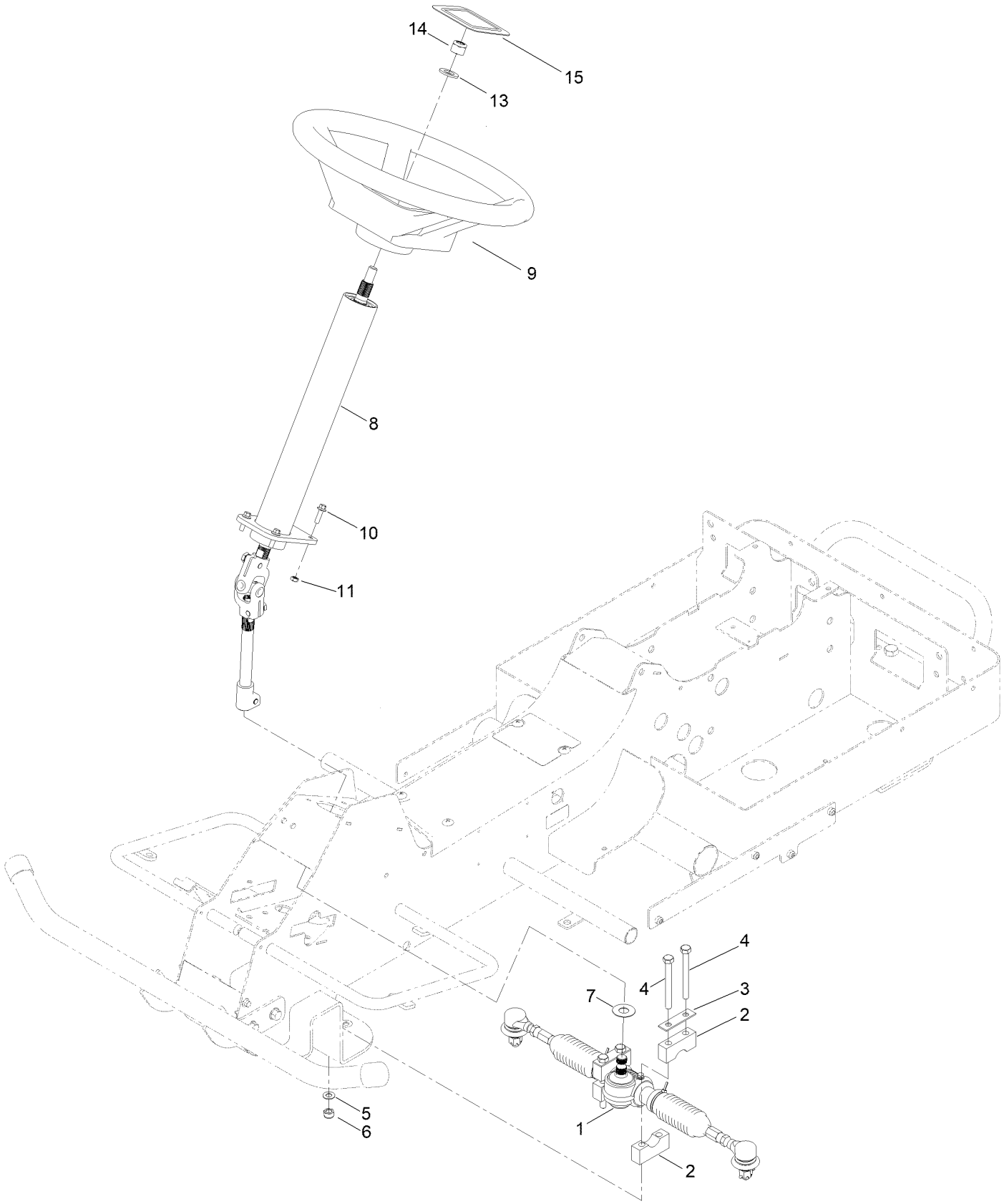

Steering Assembly (continued)

Ref.	Part Number	Qty.	Description
1	134-6201	1	Steering Rack ASM
2	134-5849	4	Mounting Block, Steering Rack
3	134-5850	2	Plate, Mounting Block
4	ZBH1H080U	4	Bolt
5	ZWP1H000U	4	Washer-Plain
6	09441	4	Nut-Hex, NI
7	134-5855	1	Washer
8	134-6202	1	Steering Rod ASM
9	134-7189	1	Steering Wheel
10	134-5864	4	Bolt
11	134-5865	4	Nut
13	09488	1	Washer
14	ZNN1L000U	1	Nut-Nyloc
15	134-7188	1	Cover, Steering Wheel

Steering Rack Assembly No. 134-6201

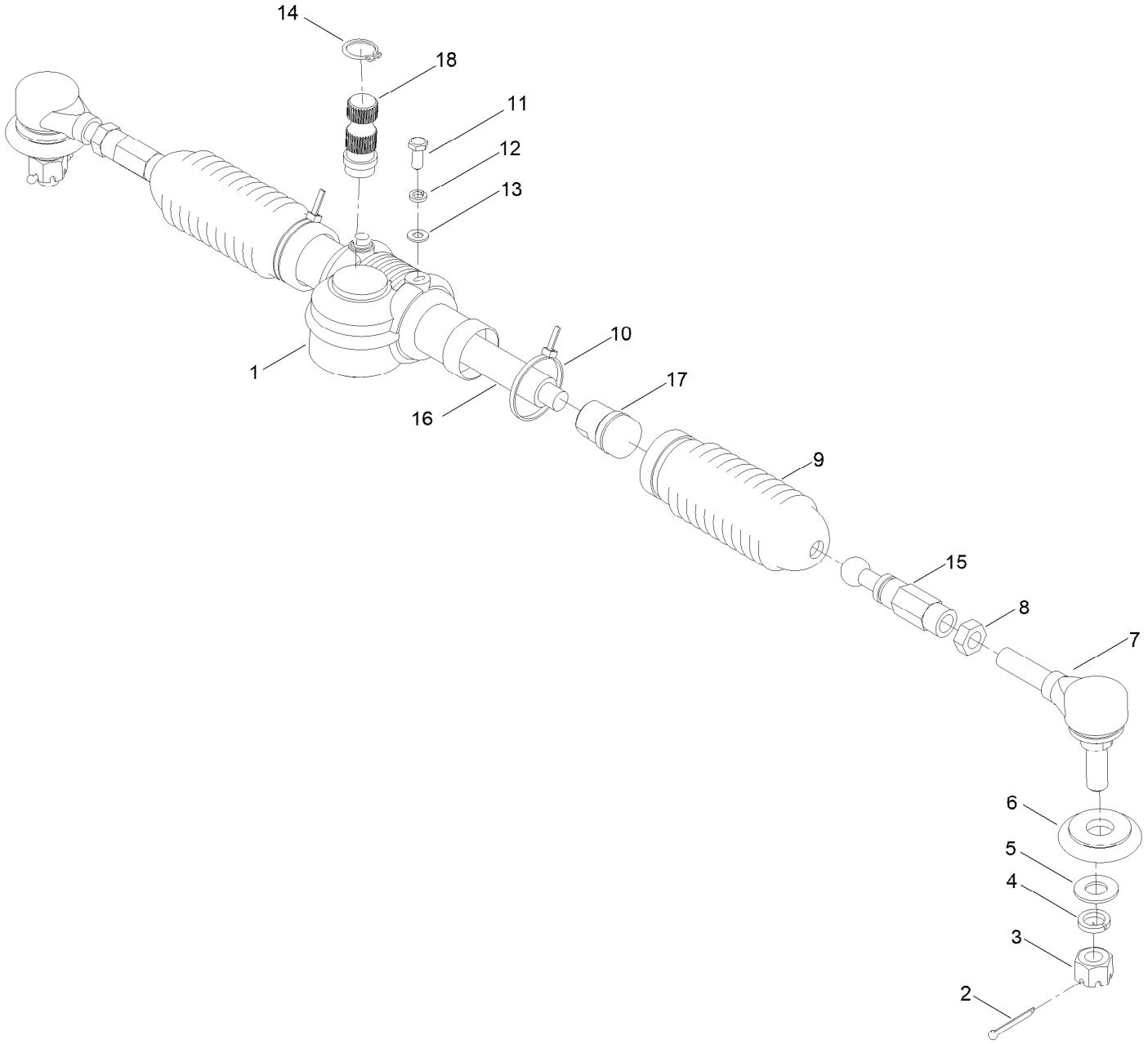

Steering Rack Assembly No. 134-6201 (continued)

Ref.	Part Number	Qty.	Description
1	134-5846	1	Steering Rack
2	134-5742	2	Pin, Split
3	134-5842	2	Nut
4	09480	2	Washer-Lock
5	09479	2	Washer-Plain
6	134-5843	2	Cover, Pivot
7	134-5844	2	Rod End
8	134-5845	2	Nut, Adjustment
9	134-5847	2	Bellows, Steering Rack
10	134-5848	2	Ziptie
11	ZDH1E012U	2	Screw-HH
12	09644	2	Washer-Spring
13	09470	2	Washer
14	134-5856	1	Clip, Steering Rack
15	134-6341	2	Adjuster, Tie Rod
16	134-6411	1	Tie Rod, Main
17	134-6412	2	End, Tie Rod
18	134-6413	1	Shaft, Steering Rack

Steering Rod Assembly No. 134-6202

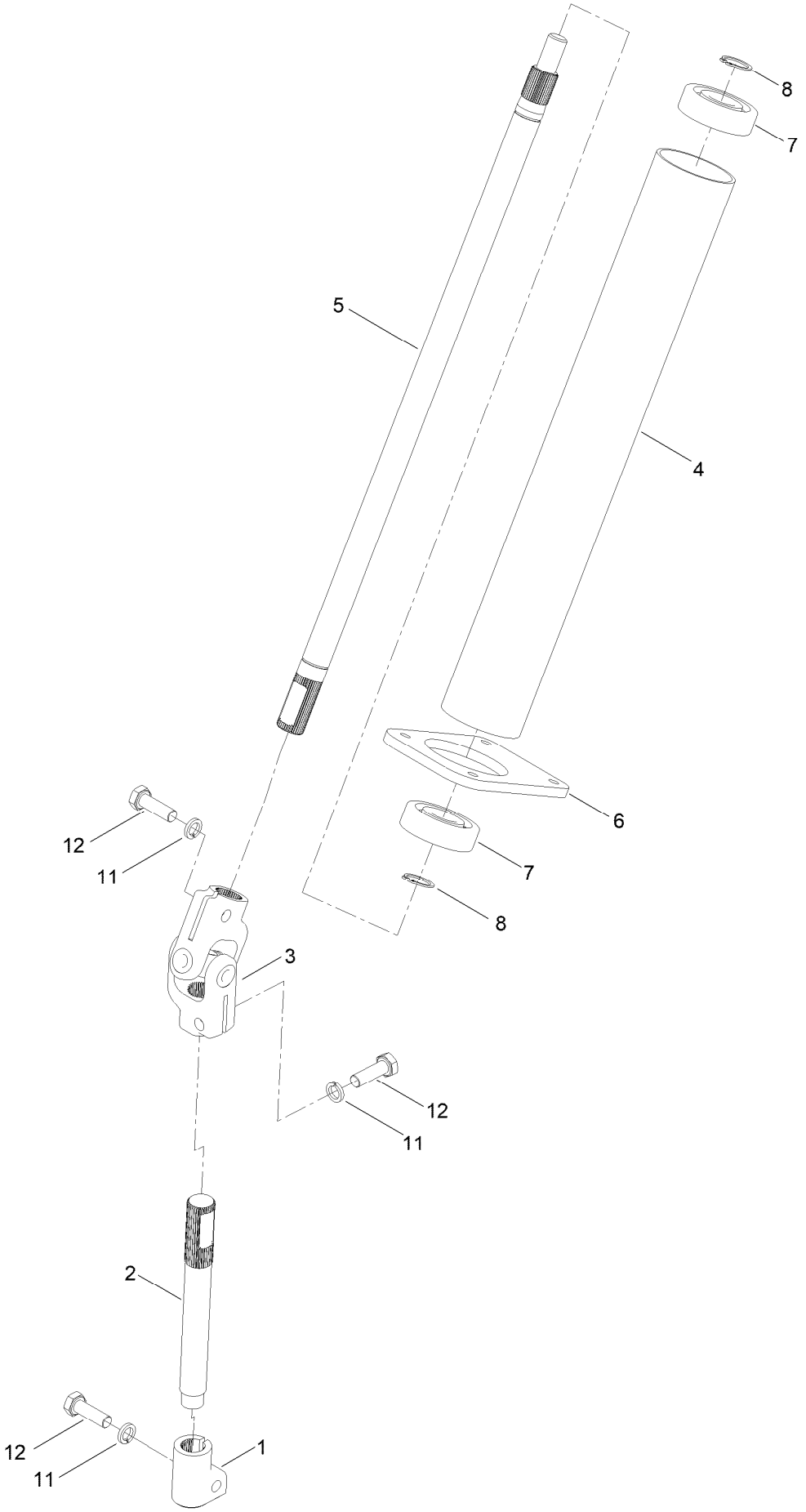

Steering Rod Assembly No. 134-6202 (continued)

Ref.	Part Number	Qty.	Description
1	134-5857	1	Connection, Steering Rack
2	134-5858	1	Lower Rod, Steering Rack
3	134-6599	1	Universal Joint
4	134-5861	1	Cover, Upper Steering Rod
5	134-5862	1	Upper Rod, Steering
6	134-5863	1	Plate, Mounting Steering Rod
7	134-5866	2	Bearing, Steering
8	134-5867	2	Clip, Steering Bearing
11	134-6338	3	Washer, Lock
12	134-6339	3	Bolt, Steering

Body Styling Assembly

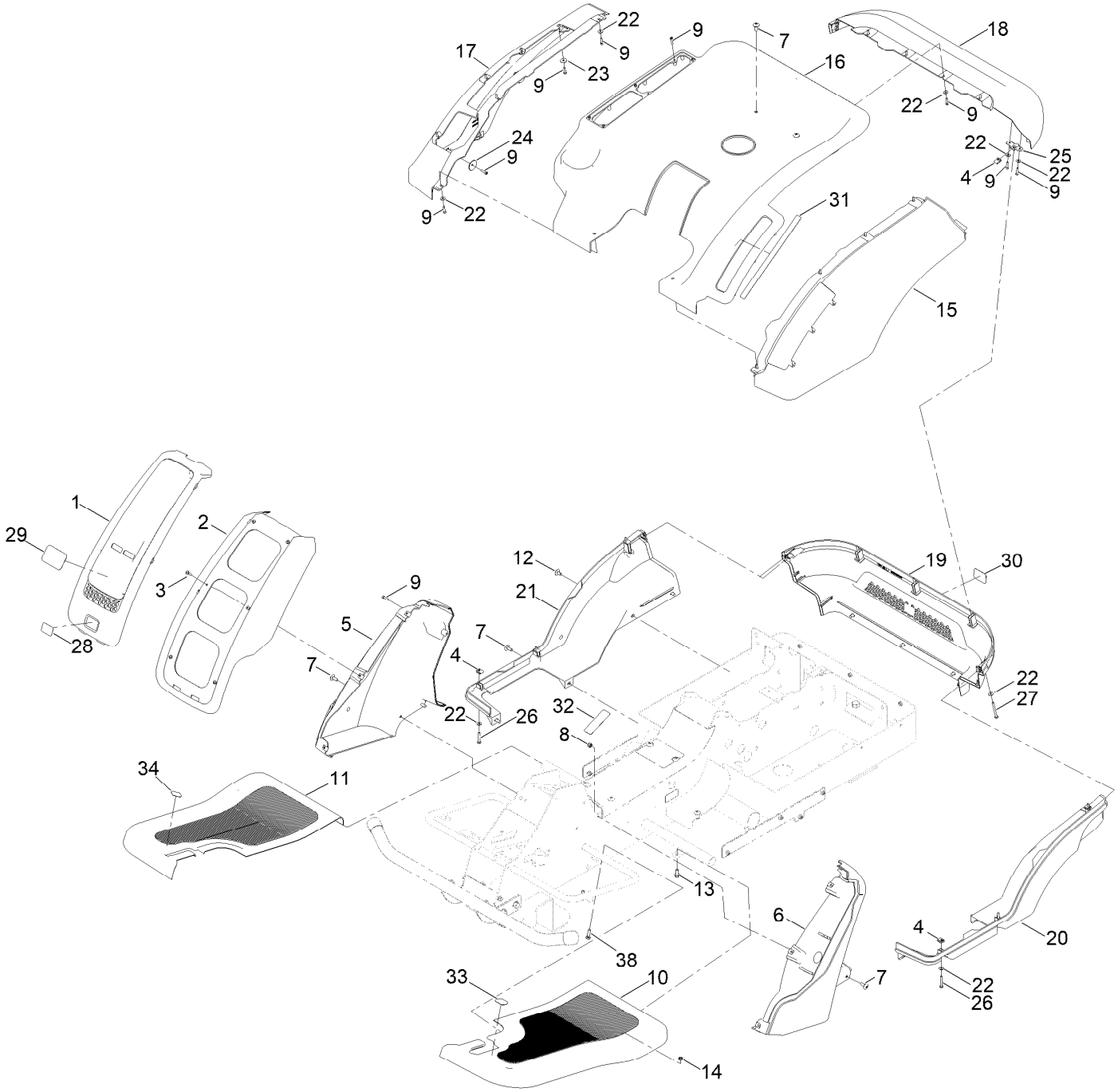

Body Styling Assembly (continued)

Ref.	Part Number	Qty.	Description
1	134-5380	1	Front Panel, Steering Column
2	134-5379	1	Front Panel Moutning, Steering Column
3	134-7690	6	Bolt
4	134-5872	15	Clip, Bolt
5	134-5381	1	RH Panel, Steering Column
6	134-5382	1	LH Panel, Steering Column
7	134-7193	12	Bolt
8	09438	12	Nut-Nyloc
9	134-5719	30	Bolt
10	134-6501	1	Panel Floor, LH
11	134-6502	1	Panel Floor, RH
12	134-6515	7	Cap Bolt
13	134-3739	4	Screw-HHF
14	134-5879	4	Nut
15	134-5372	1	Cover, LH/Middle
16	134-5370	1	Cover, Top
17	134-5371	1	Cover, RH/Middle
18	134-5373	1	Cover, Top/Rear
19	134-5376	1	Cover, Middle/Rear
20	134-5374	1	Cover, RH/Bottom
21	134-5375	1	Cover, LH/Bottom
22	134-5880	34	Washer
23	134-5881	5	Washer
24	134-5882	4	Washer, Bent
25	134-5883	3	Mountng Bracket, Rear Panel
26	134-5884	6	Bolt PH
27	134-5885	5	Bolt PH
28	134-6070	1	Decal - Erider Battery
29	134-6071	1	Decal - Toro Logo
30	134-6072	1	Decal - Toro Logo
31	134-6030	1	Decal - HOC
32	134-6029	1	Decal - Parking Brake
33	134-6032	1	Decal - Brake
34	134-6033	1	Decal - Traction
38	134-6505	4	Bolt

Battery Controller Assembly

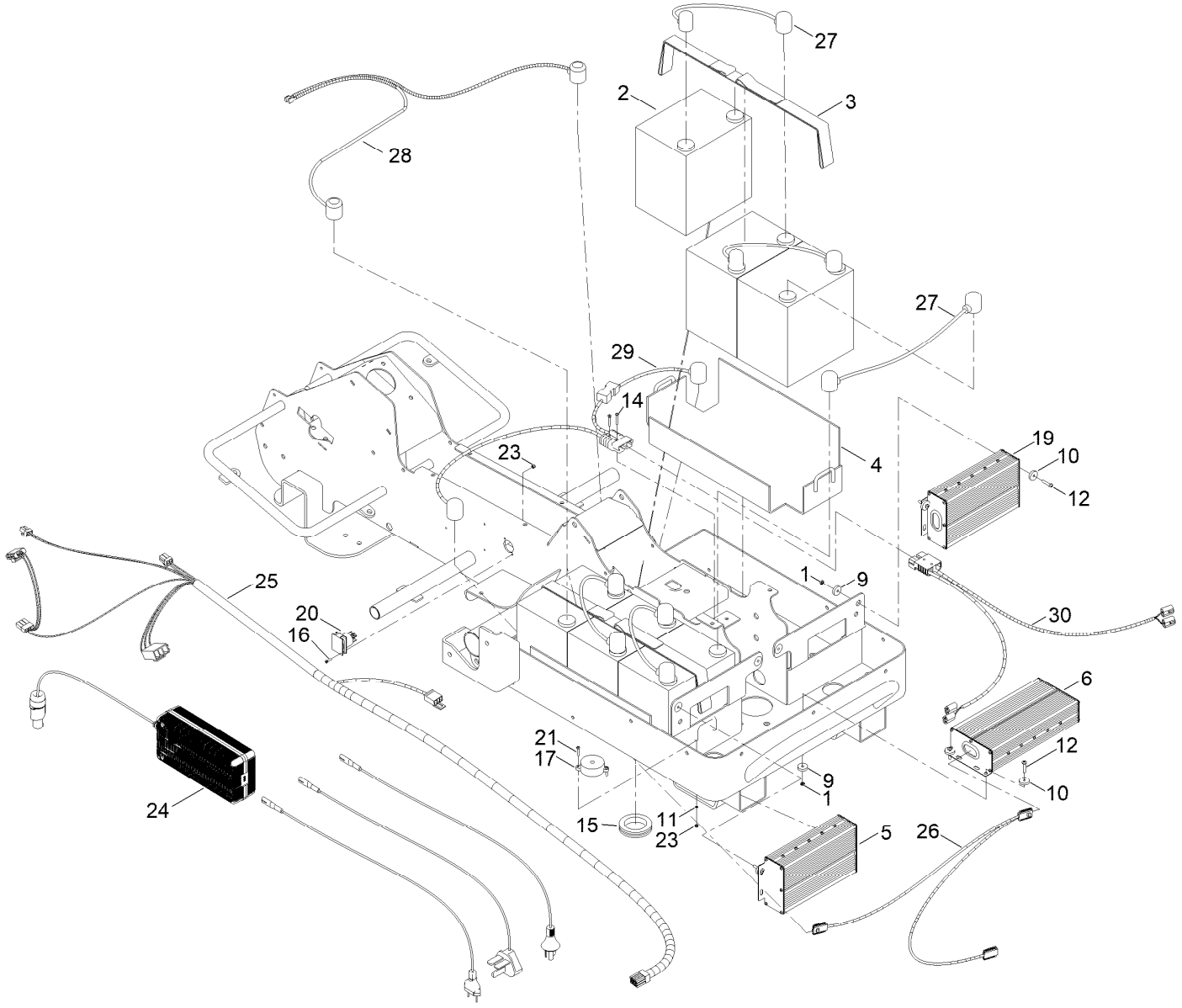

Battery Controller Assembly (continued)

Ref.	Part Number	Qty.	Description
1	134-5834	8	Nut
2	134-5886	6	Battery
3	134-5887	2	Stap, Battery
4	134-6512	2	Holder, Battery
5	134-5902	1	Cutting Controller
6	134-5903	1	Driving Controller
9	134-5906	8	Flat Bush, Rubber
10	134-5907	8	Bush, Rubber
11	134-5908	2	Spring Washer
12	134-5911	8	Bolt
14	134-5915	2	Bolt
15	134-5918	1	Insert, Rubber Cable Large
16	134-5920	2	Bolt
17	134-5928	1	Buzzer
19	134-6205	1	Cutting Controller
20	134-6206	1	Power Connector ASM
21	134-6237	2	Bolt
23	HY09698	4	Nut-Nyloc
24	134-6712	1	Charger
25	134-8677	1	Wiring Harness, Sensors
26	134-8675	1	Wiring Harness, Controler Connector
27	134-8676	1	Wiring Harness, Battery Connector
28	134-8796	1	Wiring Harness, Battery/Charging Wire
29	134-8797	1	Wiring Harness, Fuse Wire
30	134-9530	1	Wiring Harness, Power Connector

Light Assembly

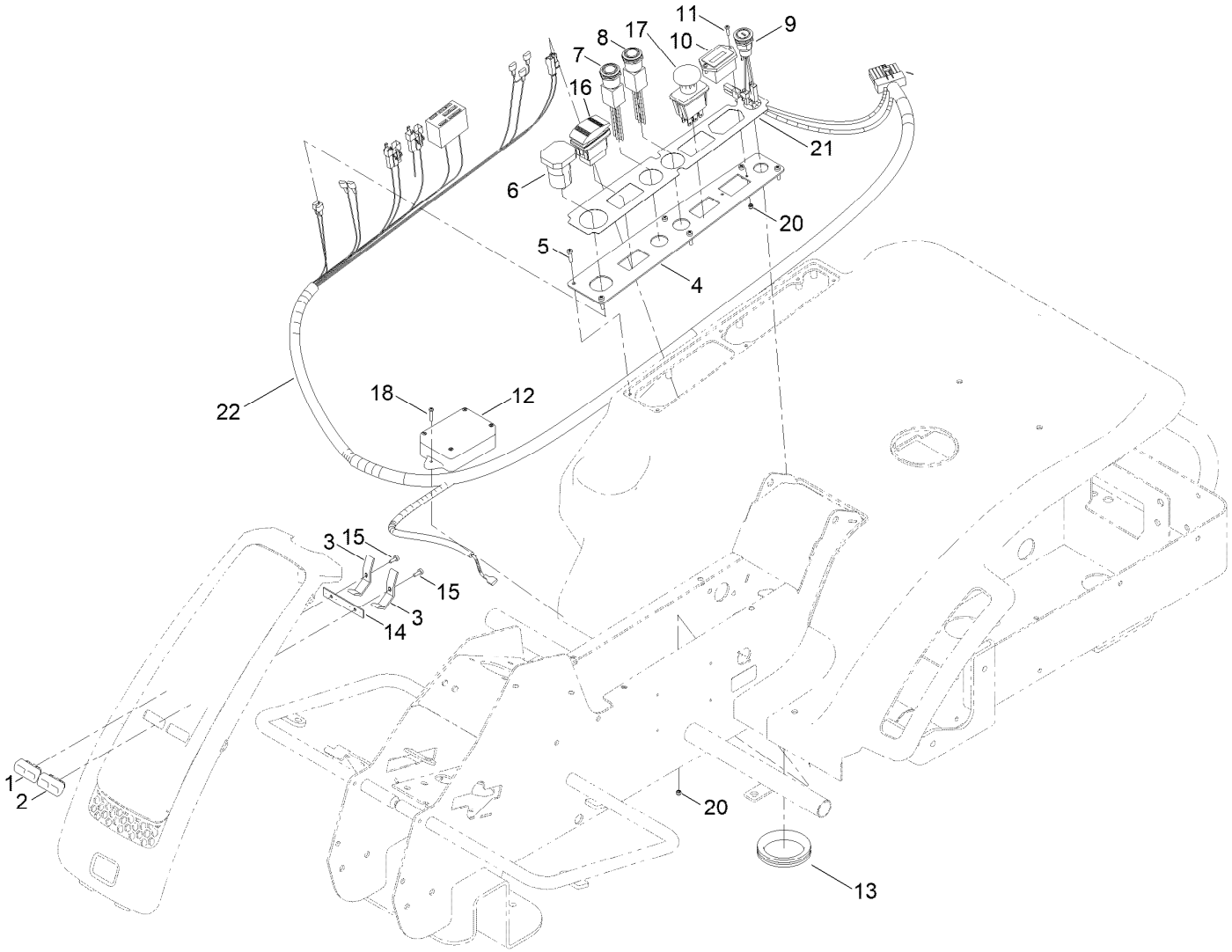

Light Assembly (continued)

Ref.	Part Number	Qty.	Description
1	134-5383	1	Casing, Light (Right, Front)
2	134-5384	1	Casing, Light (Left, Front)
3	134-5385	2	Bracket, LED Lights
4	134-5889	1	Plate, Switches
5	134-5890	6	Bolt
6	134-5891	1	USB Switch
7	134-5892	1	Button, Reverse Mow And Nut
8	134-5893	1	Button, Cruise Control And Nut
9	134-8100	1	Switch, Ignition
10	134-5899	1	Indicator, Battery Level
11	134-5900	2	Bolt
12	134-6595	1	Control Box, ASM
13	134-5919	1	Insert, Rubber Cable Small
14	134-5925	1	Plate, Lights
15	134-5927	4	Bolt
16	134-6203	2	Direction Switch ASM
17	134-6204	1	Cutter Button ASM
18	134-6237	2	Bolt
20	HY09698	4	Nut-Nyloc
21	134-6028	1	Decal - Control Panel
22	134-8673	1	Wiring Harness, Control Panel

Seat Assembly

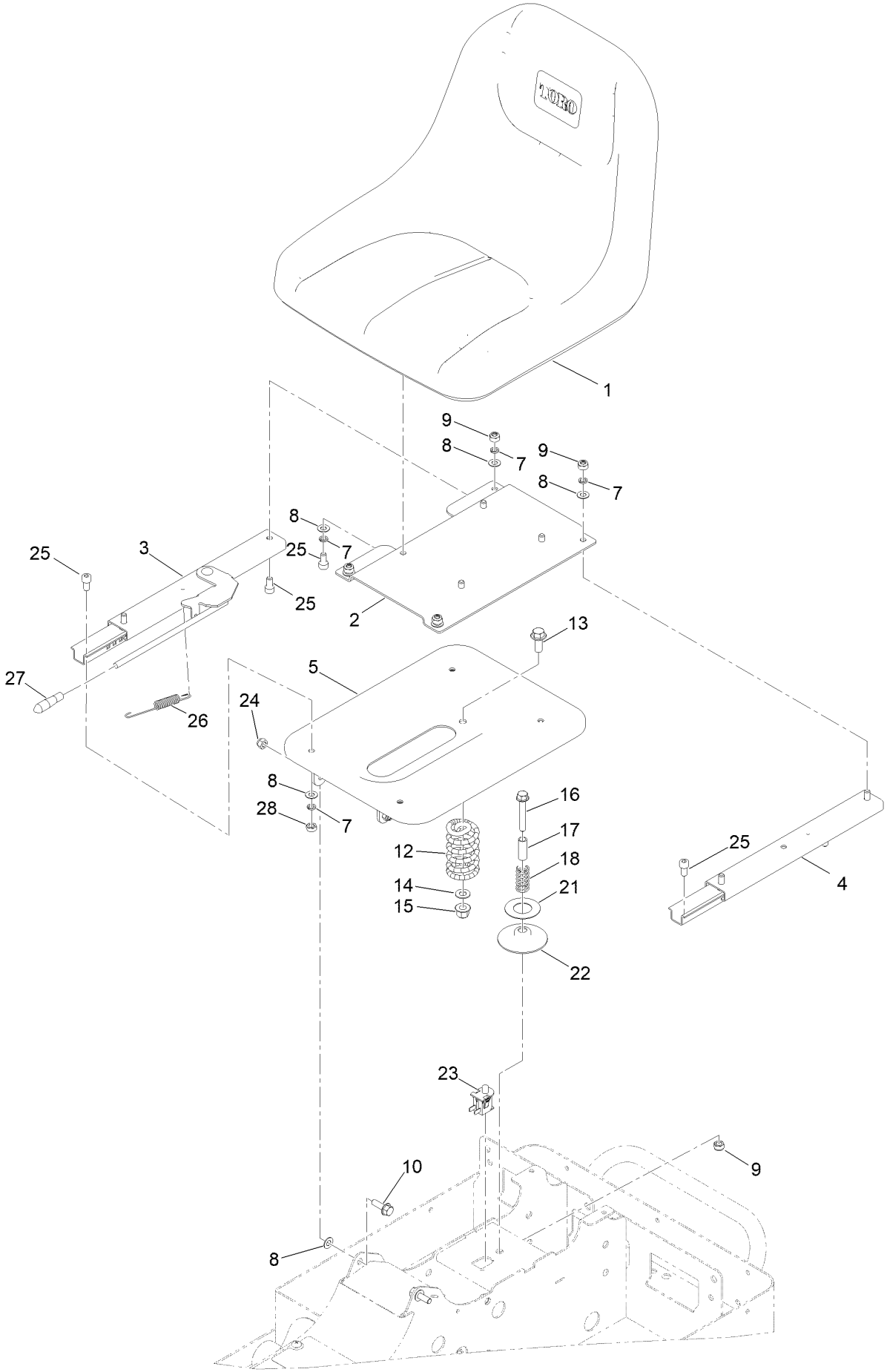

Seat Assembly (continued)

Ref.	Part Number	Qty.	Description
1	134-6509	1	Seat
2	134-5930	1	Mounting Plate, Seat
3	134-6511	1	Seat Slide ASM, RH
4	134-6510	1	Seat Slide ASM, LH
5	134-6332	1	Seat Base, ASM
7	03469	12	Washer-Spring
8	ZWP1H000U	14	Washer-Plain
9	09441	5	Nut-Hex, NI
10	134-3747	2	Screw-HHF
12	134-5940	1	Spring, Seat
13	134-3751	1	Screw-HHF
14	09479	1	Washer-Plain
15	134-3763	1	Nut-Flange, NI
16	134-3749	1	Screw-HHF
17	134-5945	1	Shaft, Spring
18	134-5946	1	Small Spring, Seat
21	134-5949	1	Washer
22	134-5950	1	Plate, Spring Seat
23	134-5951	1	Seat Sensor
24	134-6335	2	Nut, Seat
25	134-6334	12	Bolt Seat, Slide Mount
26	134-5936	1	Adjustment Spring, Seat
27	134-5937	1	Adjustment Lever Cap, Seat
28	ZNH1H000U	4	Nut-Hex

Deck Lift Assembly

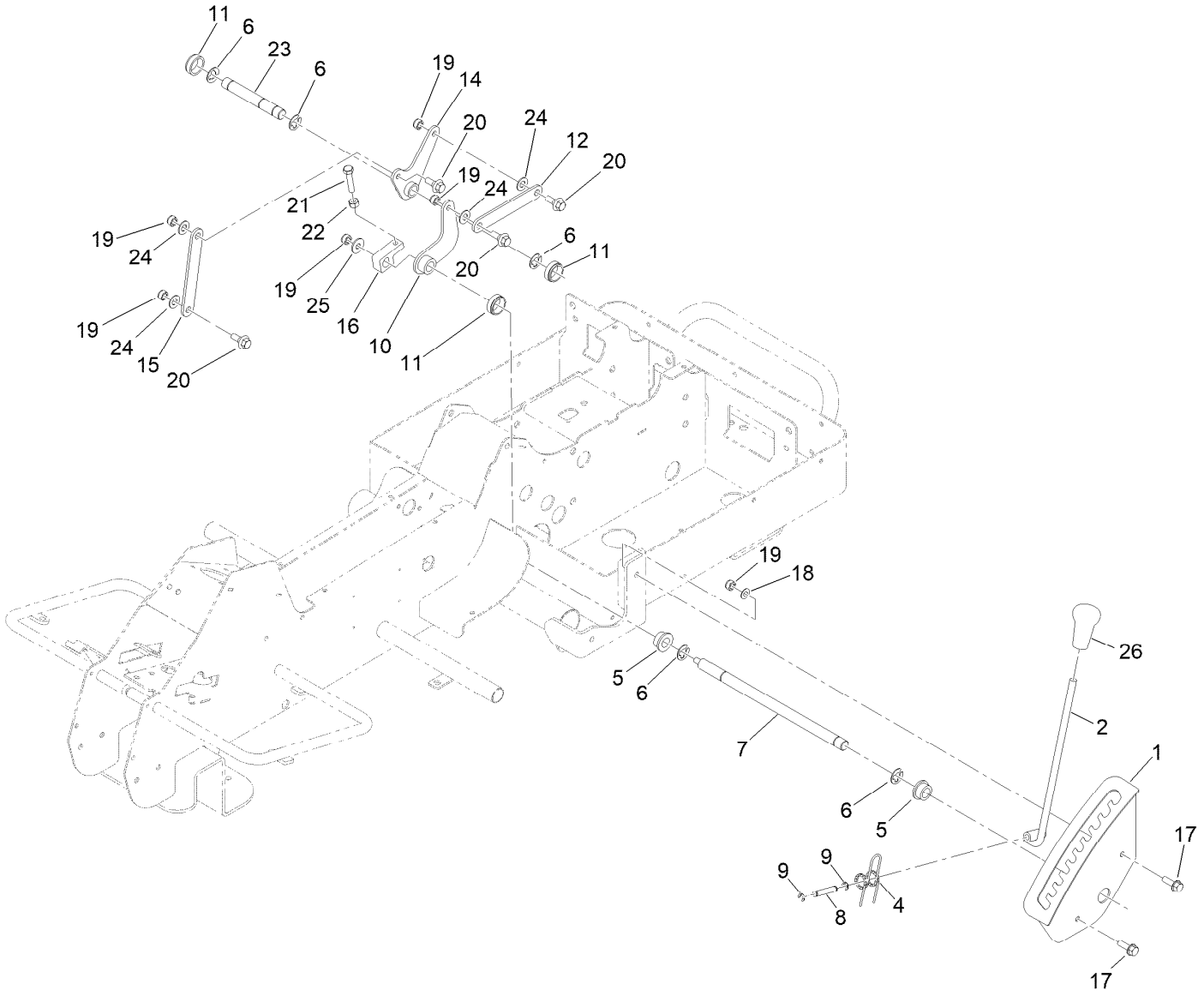

Deck Lift Assembly (continued)

Ref.	Part Number	Qty.	Description
1	134-6251	1	HOC Plate ASM
2	134-6252	1	HOC Lever ASM
4	134-5956	1	Spring, HOC Lever
5	134-5957	4	Bush, HOC Shaft
6	134-5958	5	Clip, HOC Shaft
7	134-5959	1	HOC Shaft
8	134-5960	1	Shaft, HOC Lever
9	134-5962	2	Clip, HOC Lever Shaft
10	134-6254	1	HOC Rotation Plate ASM (Small)
11	134-5963	3	Bush, HOC Shaft
12	134-5966	1	Short Plate, HOC
14	134-5967	1	Plate, Rotation Large (HOC)
15	134-5968	1	Long Plate, HOC
16	134-5969	1	Adjustment, HOC
17	134-3747	2	Screw-HHF
18	ZWP1H000U	2	Washer-Plain
19	09441	7	Nut-Hex, NI
20	134-7178	4	Bolt, Flange
21	09681	1	Bolt
22	134-5973	1	Plain Nut
23	134-5974	1	Short Shaft, HOC Lever
24	09479	4	Washer-Plain
25	134-6414	1	Washer
26	134-5953	1	HOC, Grip

Notes:

Notes:

TORO®

Count on it.