FORM NO. 3312-175

TORO®

MODEL NO. 20674-3000001 & UP

PARTS CATALOG

21" S.P. REAR BAGGER

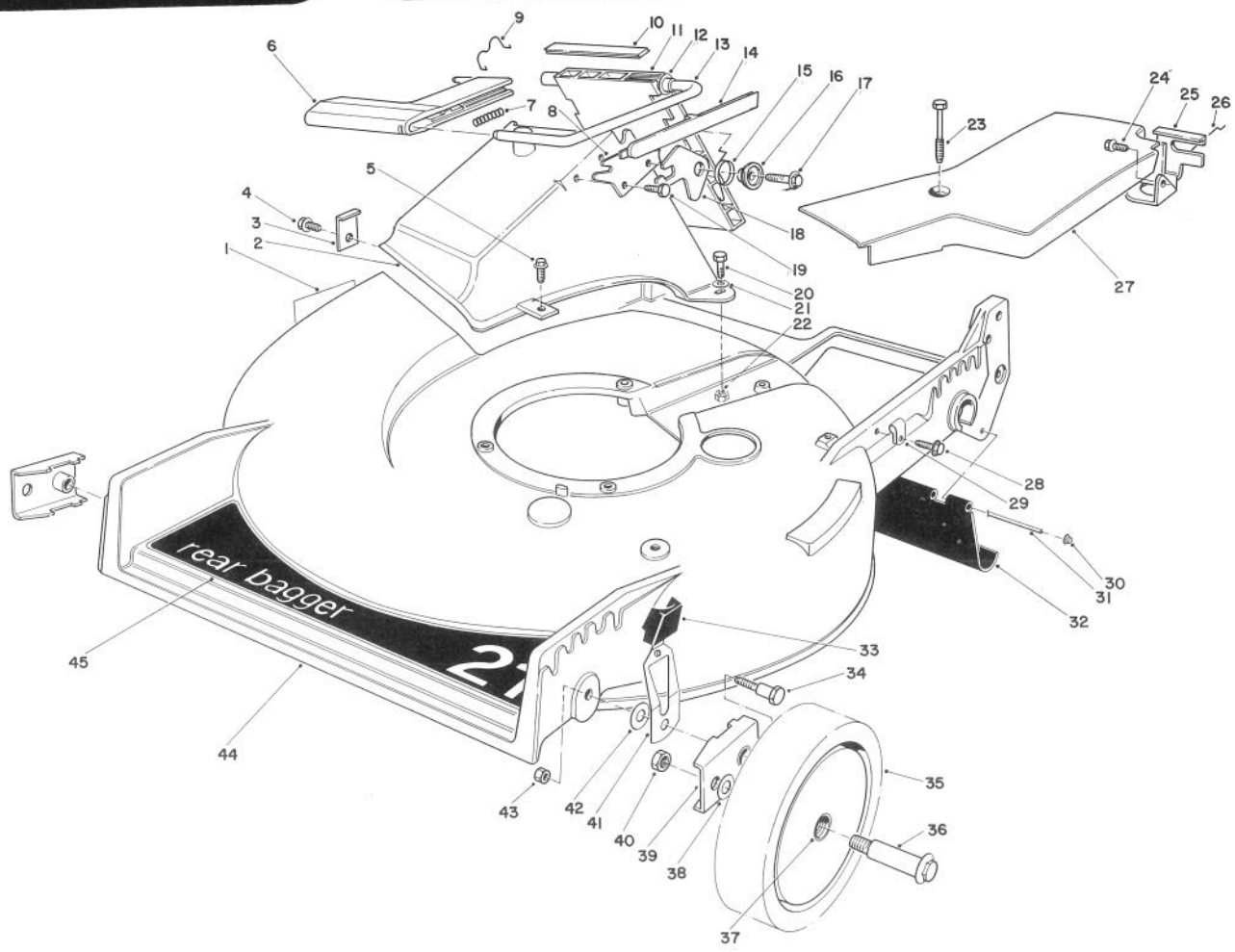

HOUSING ASSEMBLY

Ref. No.	Part No.	Description	No. Used
1	39-5770	Decal — Danger	1
2	46-3500	Tunnel — Discharge	1
3	47-6540	Clip — Tunnel	1
4	12-3270	Screw	1
5	11-9760	Screw — Thread Forming	1
6	46-3520	Handle — Door	1
7	46-7060	Spring	1
8	23-1040	Plate — Latch	1
9	47-5840	Retainer — Door	1
10	46-6820	Cover — Door	1
11	46-3510	Door — Discharge	1
12	23-0880	Bushing	1
13	46-3530	Rod — Door	1
14	46-7050	Cover — Door Handle	1
15	33-4860	Spring — Torsion	1

Ref. No.	Part No.	Description	No. Used
16	43-4840	Spacer — Latch	1
17	46-8091	Screw — Tapping	1
18	42-4010	Latch — Door	1
19	46-8090	Screw — Tapping	1
20	321-8	Capscrew — Hex Hd.	2
21	3256-22	Washer	2
22	3296-42	Locknut	2
23	37-7260	Screw — Tapping	2
24	32144-11	Screw — Thread Forming	1
25	46-5870	Bracket — Traction Adjust	1
26	46-7030	Retainer — Cable	1
27	42-0381	Cover — Belt	1
28	12-5450	Screw — Tapping	1
29	2412-83	Clamp	1
30	3290-438	Push — Nut	2

COPYRIGHT © ALL RIGHTS RESERVED

The Toro Company — 1983
MINNEAPOLIS, MN 55420 — U.S.A.

PRICE $1.00

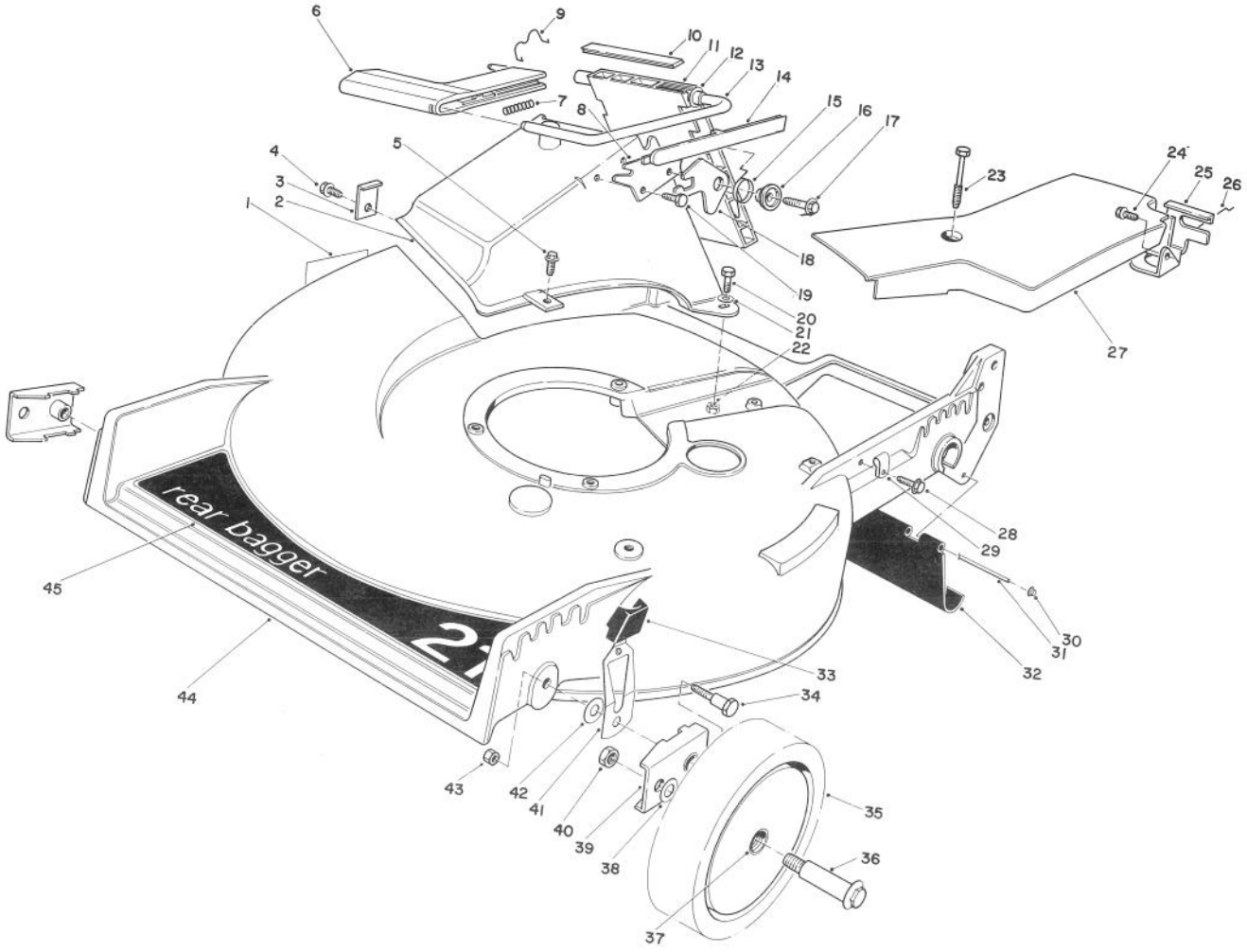

HOUSING ASSEMBLY (Continued)

Ref. No.	Part No.	Description	No. Used
31	47-4684	Rod — Rear Shield	1
32	44-0580	Shield — Trailing	1
33	25-7740	Knob — Arm	2
34	44-5270	Pivot Screw	2
35	44-0560	Wheel & Tire Assembly (Incl. Ref. #37)	2
36	27-6230	Bolt — Wheel	2
37	27-6250	Bushing	4

Ref. No.	Part No.	Description	No. Used
38	40-1940	Washer — Wheel Bolt	2
39	47-2940	Pivot Arm Assembly	2
40	32146-6	Locknut	2
41	44-0990	Spring Arm Assembly	2
42	5-4460	Pivot Washer	2
43	3296-29	Locknut	2
44	11-4089	Housing 21" S.P. (Incl. Ref. #1)	1
45	44-0450	Decal — 21" Rear Bagger	1

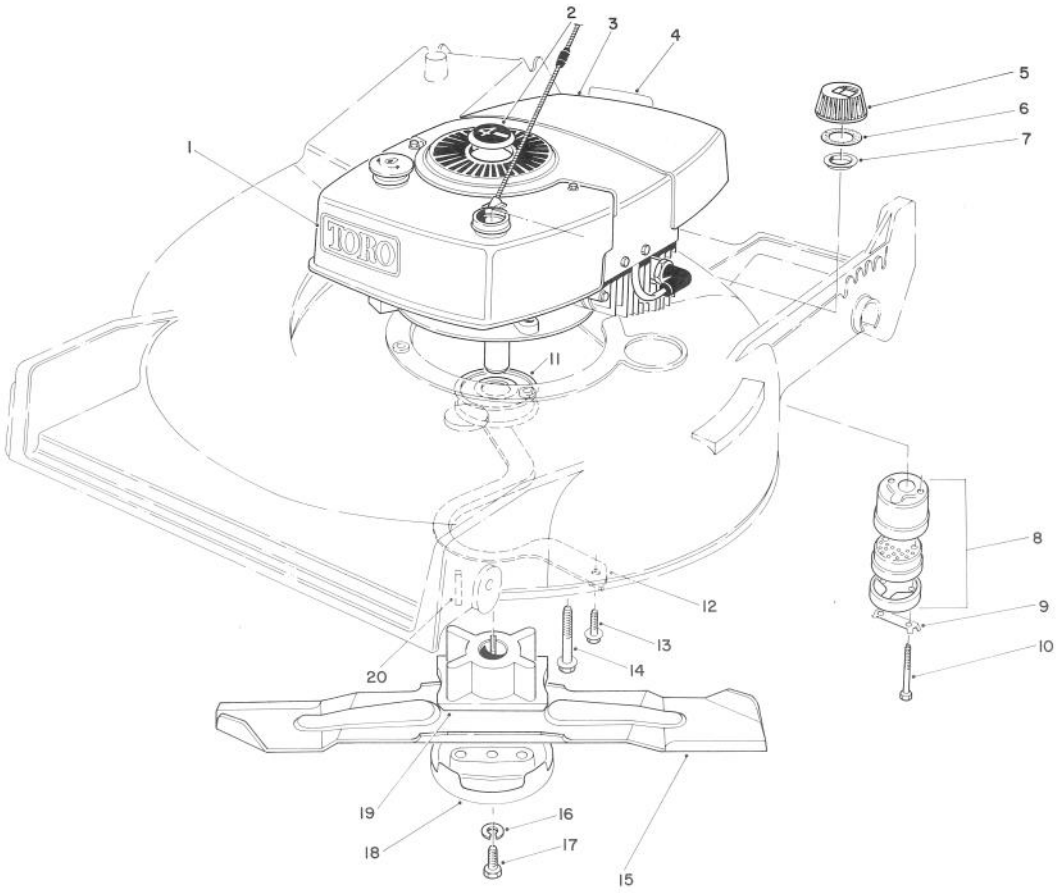

ENGINE ASSEMBLY

Ref. No.	Part No.	Description	No. Used
1	44-0510	Decal — Toro	1
2	38-1480	Plug Button	1
3	221-731	Engine	1
4	37-1580	Decal — Maintenance	1
5	27-7872	Gas Cap (Incl. Ref. #6 & 7)	1
6	2210-144	Gasket	1
7	2210-143	Baffle	1
8	5-4769	Muffler (Incl. Ref. #9 & 10)	1
*	39-5930	Spark Arrester Muffler — Optional (Incl. Ref. #9 & 10)	1
9	3-5094	Clip — Locking	1
10	321-20	Capscrew	2

Ref. No.	Part No.	Description	No. Used
11	23-0130	Pulley — Driver	1
12	40-5720	Guide — Belt	1
13	11-9760	Screw — Thread Forming	2
14	11-0581	Screw — Thread Forming	3
15	42-1000	Blade 21"	1
16	3253-22	Lockwasher	1
17	26-0670	Screw — Blade	1
18	42-0910	Anti-Scalp Cup	1
19	46-3490	Retainer — Blade	1
20	7-0036	Key — Square	1

*Not Illustrated

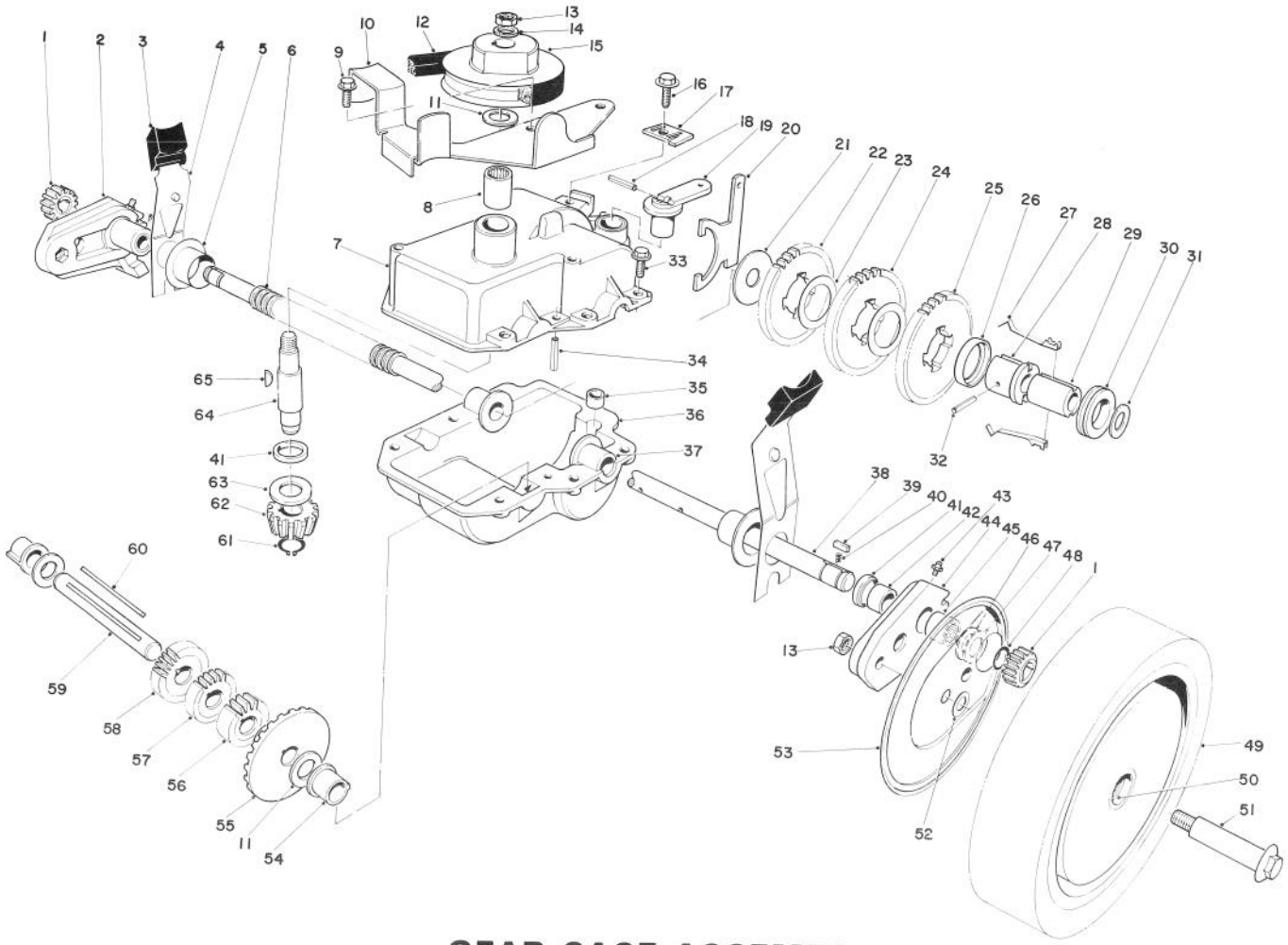

GEAR CASE ASSEMBLY

Ref. No.	Part No.	Description	No. Used
1	39-9160	Pinion	2
2	29-9590	Pivot Arm Assembly — R.H. (Incl. Ref. #41-43 & 45)	1
3	25-7740	Knob — Arm	2
4	44-1010	Spring Arm Assembly	2
5	42-3520	End Cap	2
6	24-7922	Cover — Drive Shaft	1
7	39-7282	Upper Case	1
8	47-6720	Bearing	1
9	12-3270	Screw — Special	2
10	46-3570	Bracket — Belt Guide	1
11	36-4790	Washer — Thrust	3
12	36-8070	V-Belt	1
13	32146-6	Locknut	3
14	3256-45	Washer	1
15	39-6740	Pulley	1
16	32144-11	Screw — Thread Forming	1
17	46-5610	Cable Clamp	1
18	32121-99	Coil Pin	1
19	29-9560	Lever — Shift	1
20	29-9520	Shift Yoke	1
21	29-9690	Washer	1
22	42-4740	Gear — 38T	1

Ref. No.	Part No.	Description	No. Used
23	36-4770	Spacer — Gear	2
24	29-9271	Gear — 42T	1
25	46-3560	Gear — 52T	1
26	39-7830	Key Retainer	1
27	39-6470	Key	2
28	39-6730	Sleeve Body	1
29	39-6720	Sleeve	1
30	29-9340	Shift Collar	1
31	36-4780	Washer	1
32	32121-106	Coil Pin	1
33	32144-44	Screw — Tapping	6
34	32121-100	Roll Pin	1
35	29-9570	Bushing — Yoke	1
36	29-9410	Lower Case	1
37	47-5220	Bushing — Output Shaft	2
38	44-0850	Output Shaft	1
39	39-9680	Key — Rectangular	2
40	39-9650	Spring	2
41	47-7260	Seal	3
42	47-2890	Bushing	2
43	302-56	Fitting Grease	2
44	29-9640	Pivot Arm Assembly — L.H. (Incl. Ref. #41-43 & 45)	1

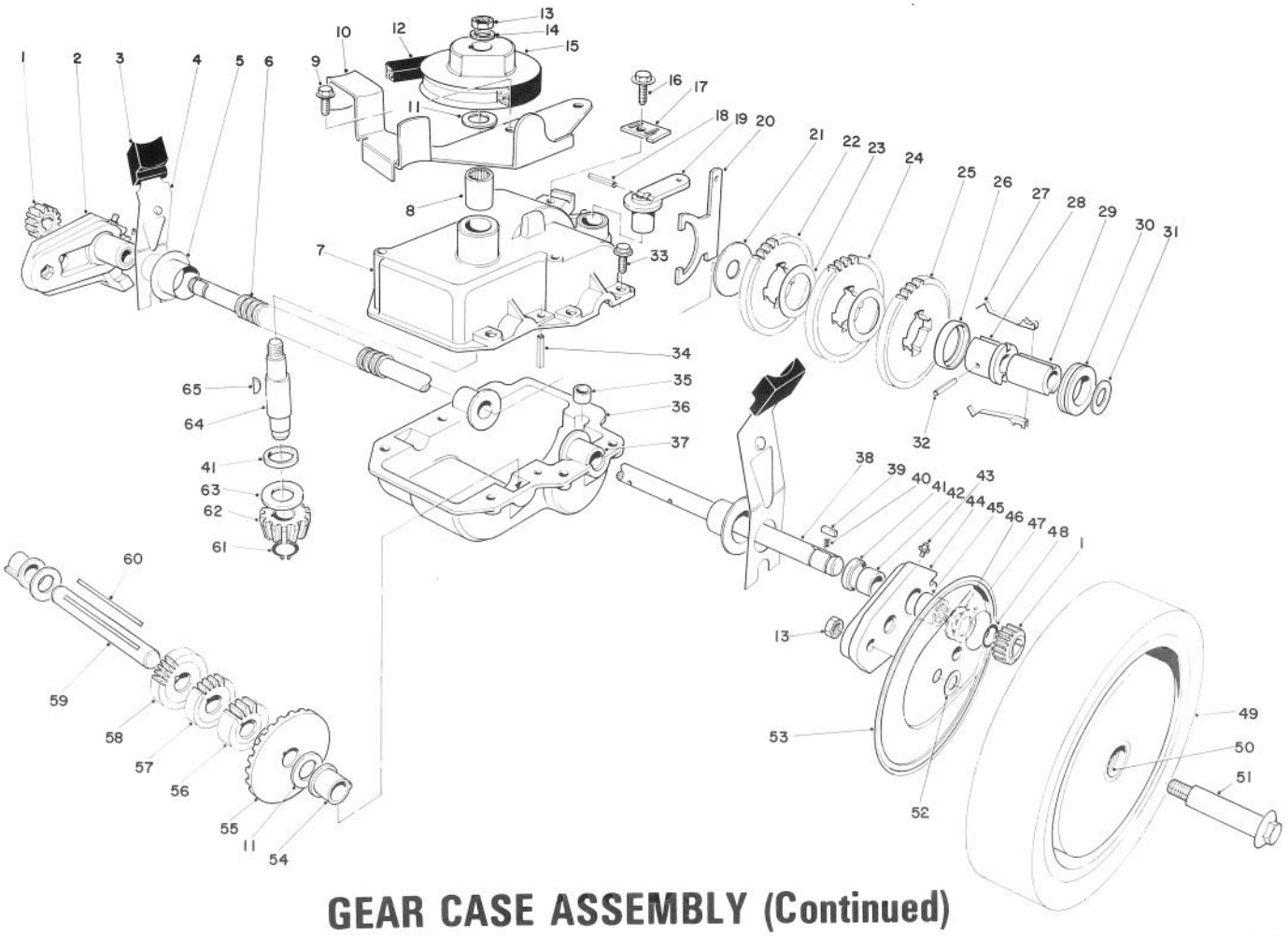

GEAR CASE ASSEMBLY (Continued)

Ref. No.	Part No.	Description	No. Used
45	48-2060	Needle Bearing	2
46	252-73	Washer — Thrust, Inner	2
47	46-2840	Washer — Thrust, Outer	2
48	32151-68	Retaining Ring	4
49	44-0570	Wheel, Tire & Gear Assembly (Incl. Ref. #50)	2
50	27-6250	Bushing — Wheel	4
51	27-6230	Wheel Bolt	2
52	40-1940	Washer — Wheel Bolt	2
53	44-0600	Cover — Wheel	2
54	47-5210	Bushing — Short Shaft	2
55	39-6670	Gear — Bevel	1
56	46-3540	Gear — 12 Tooth	1
57	46-3550	Gear — 14 Tooth	1
58	39-6650	Gear — 18 Tooth	1
59	46-9470	Shaft — Intermediate	1
60	39-7841	Key — Square	1
61	32151-57	Ring — Retaining	1
62	39-6660	Pinion — Bevel	1
63	47-2910	Washer — Thrust	1
64	39-6690	Input Shaft	1
65	3257-1	Key — Woodruff	2
*	11-4139	Gear Case Assembly Complete	1

*Not Illustrated

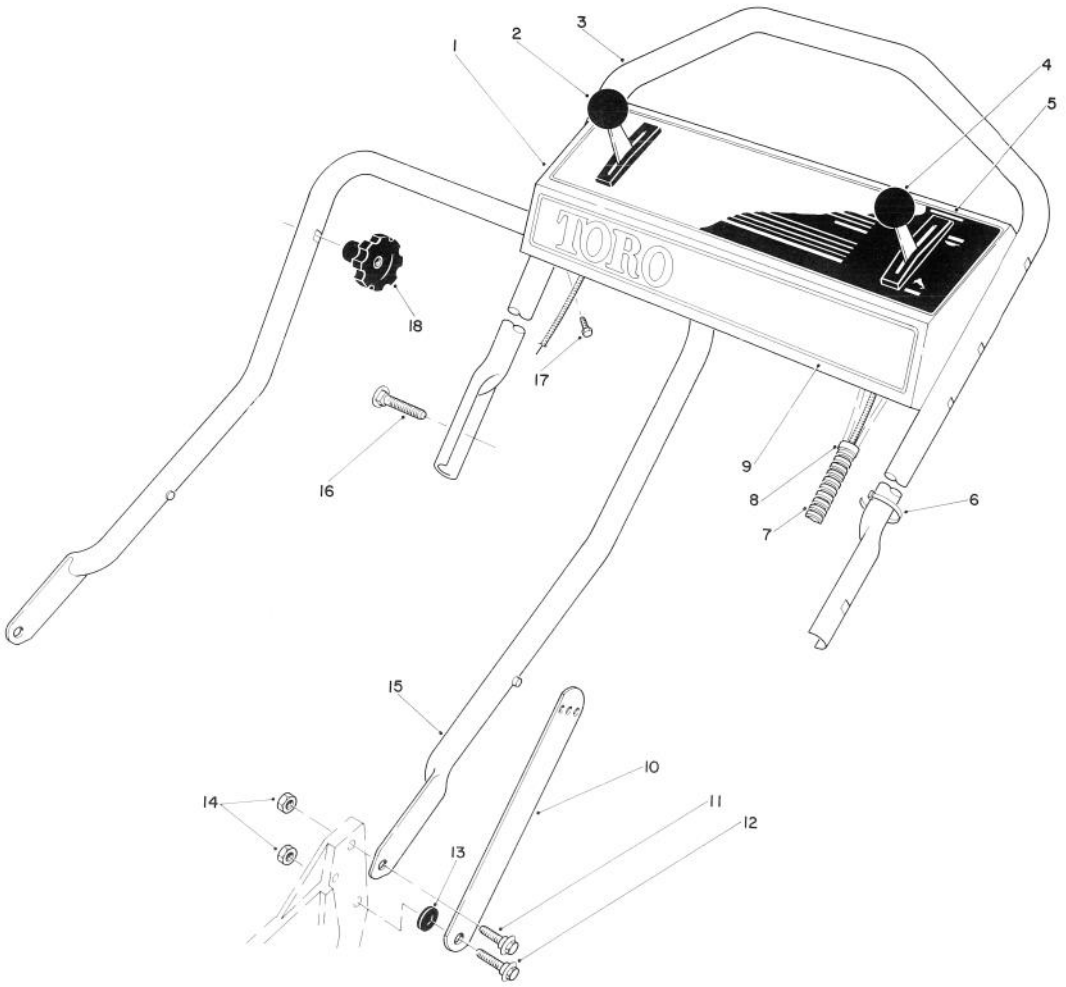

HANDLE ASSEMBLY

Ref. No.	Part No.	Description	No. Used
1	11-5129	Control Panel (Incl. Ref. #5)	1
2	46-5430	Control — Ground Speed	
		Bend Type 1	
		Sheath Lg. 42¼" (107.3CM)	
		Wire Lg. 2-1/16" (5.2CM)	1
3	46-5411	Handle — Upper	1
4	46-6010	Control — Throttle	
		Bend Type 1	
		Sheath Lg. 53½" (135.9 CM)	
		Wire Lg. 1⅞" (4.8 CM)	1
5	46-8790	Decal — Instruction	1
6	3290-378	Cable Tie	3

Ref. No.	Part No.	Description	No. Used
7	46-6440	Cover — Control Cables	1
8	2412-50	Clip	2
9	46-7380	Decal — Toro, Panel	1
10	43-1370	Latch — Handle	2
11	27-7211	Screw — Shoulder	2
12	27-7210	Screw — Shoulder	2
13	3-3287	Spacer — Latch	2
14	3296-47	Locknut	4
15	43-1360	Lower Handle Assembly	1
16	17-9421	Screw — Handle	2
17	32104-76	Screw — Tapping	3
18	19-4050	Knob — Handle	2

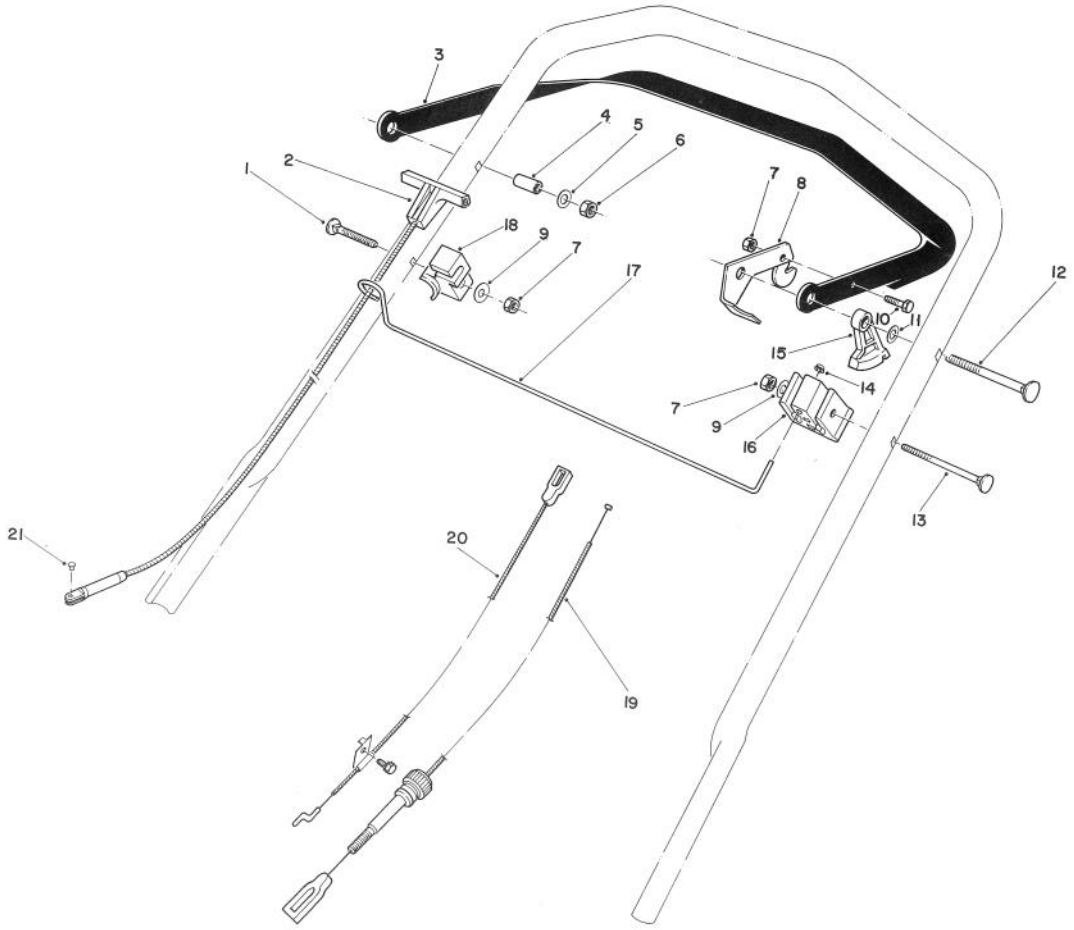

TRACTION CONTROL ASSEMBLY

Ref. No.	Part No.	Description	No. Used
1	46-6430	Screw — Handle	1
†2		Rope — Starter	1
3	46-5560	Control Bar	1
4	46-5580	Spacer — Powdered Metal	2
5	3256-23	Washer	2
6	3296-47	Locknut	2
7	3296-42	Locknut	3
8	46-7950	Lever — Control	1
9	3256-22	Washer	2
10	321-5	Capscrew	1
11	3256-25	Washer	1

Ref. No.	Part No.	Description	No. Used
12	17-9421	Handle Screw	2
13	46-6432	Handle Screw	1
14	3290-337	Pushnut	1
15	46-5520	Lever — Traction	1
16	46-6980	Support — Cable	1
17	46-7970	Rod — Rope	1
18	46-7960	Catch — Rod	1
19	46-5481	Cable — Traction	1
20	46-8011	Cable — Brake	1
21	2210-251	Rivet	1

†Obtain from local Tecumseh-Lauson Dealer.

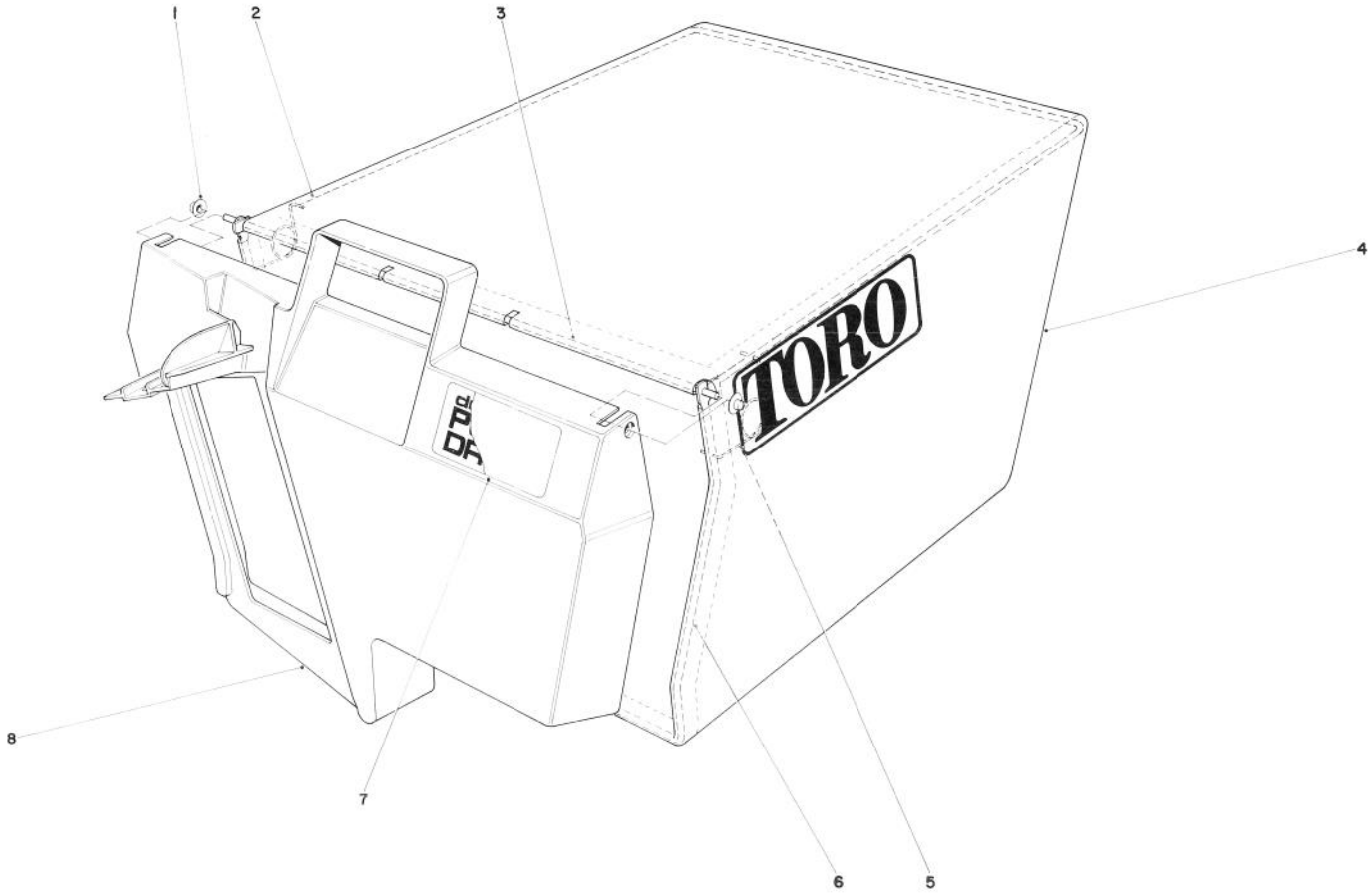

GRASS BAG ASSEMBLY NO. 11-0189

Ref. No.	Part No.	Description	No. Used
1	3290-422	Push Nut	2
2	42-4030	Bag Frame Upper	1
3	33-4820	Hinge Bag Door	1
4	8-2759	Grass Bag	1

Ref. No.	Part No.	Description	No. Used
5	36-6910	Spring	2
6	42-4020	Frame Bag	1
7	40-2240	Decal — Bag Door	1
8	37-1390	Door Grass Bag	1

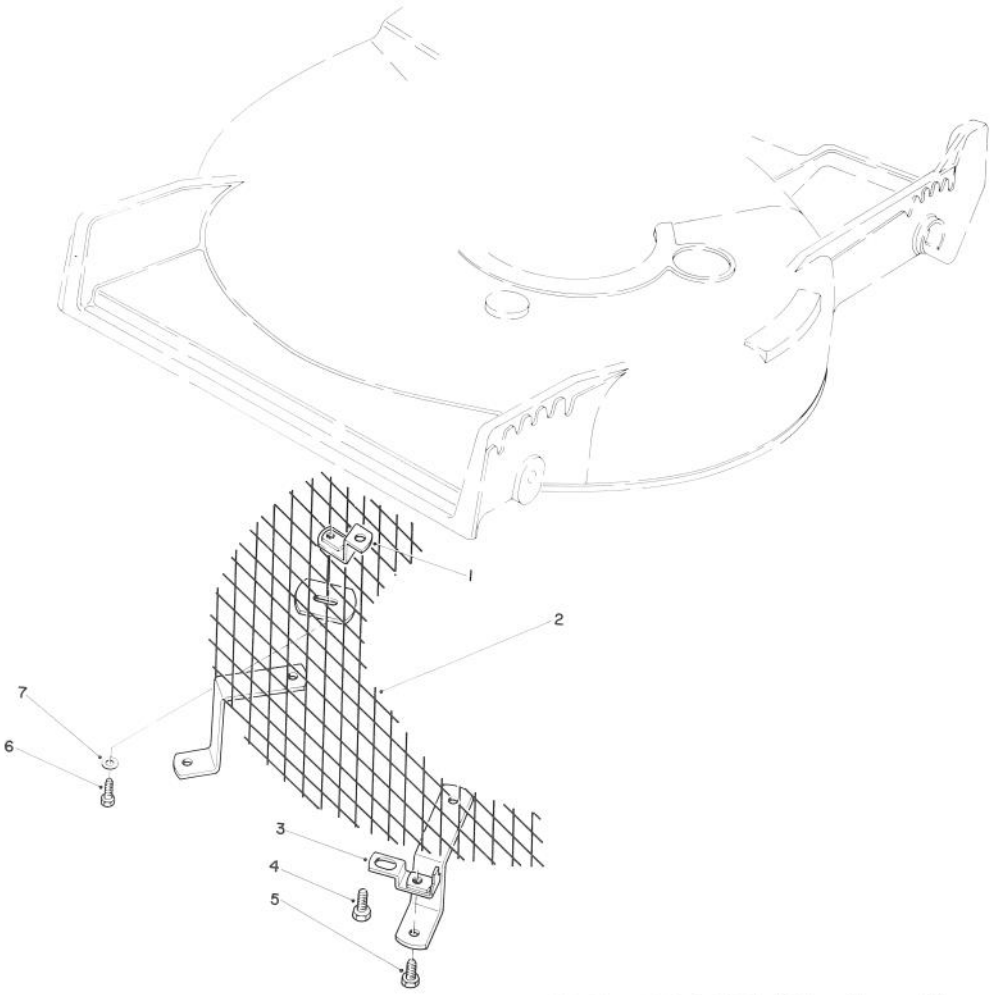

LEAF SHREDDER KIT MODEL NO. 59157 (Optional)

Ref. No.	Part No.	Description	No. Used
1	47-6260	Bracket	1
2	47-6230	Screen	1
3	46-4880	Mounting Bracket	2
4	32144-11	Screw — Self Tapping	2

Ref. No.	Part No.	Description	Ref. No.
5	321-3	Capscrew, Hex Hd.	2
6	321-5	Capscrew, Hex Hd.	1
7	3256-1	Washer	1

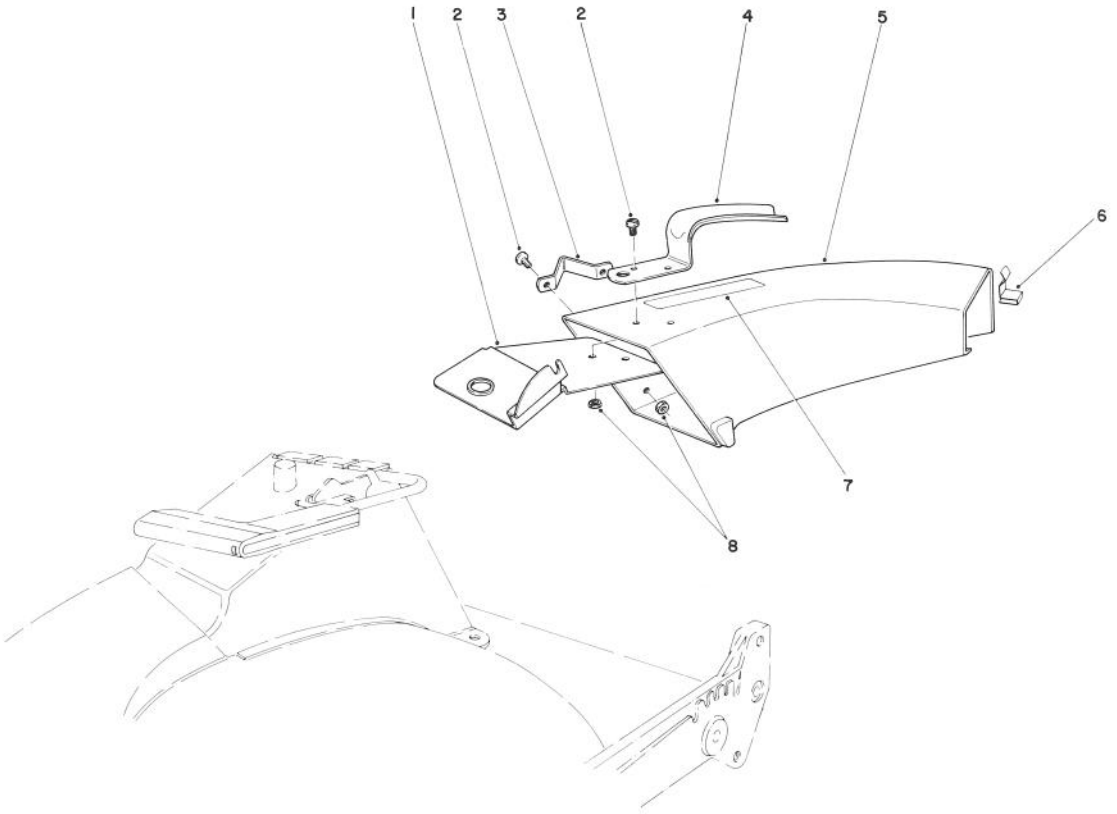

SIDE DISCHARGE CHUTE MODEL NO. 59108 (Optional)

Ref. No.	Part No.	Description	No. Used
1	44-2330	Plate — Discharge Chute	1
2	3251-3	Screw	4
3	46-6580	Bracket	1
4	42-1340	Handle — Grass Chute	1

Ref. No.	Part No.	Description	No. Used
5†		Chute Assembly	1
6	3290-439	Clip	1
7	39-9120	Decal — Caution	1
8	3296-12	Locknut	4

†Order Chute Assembly Model No. 59108.

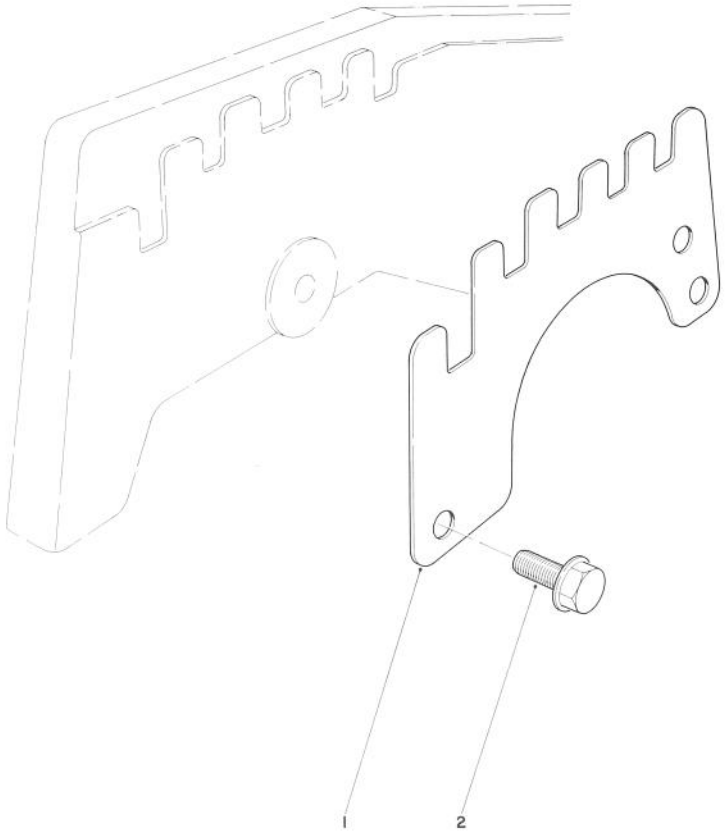

WEAR PLATE KIT NO. 44-5530 (Optional)

Ref. No.	Part No.	Description	No. Used
1	43-5050	Plate — Wear	4

Ref. No.	Part No.	Description	No. Used
2	12-3270	Screw — Thread Forming	8

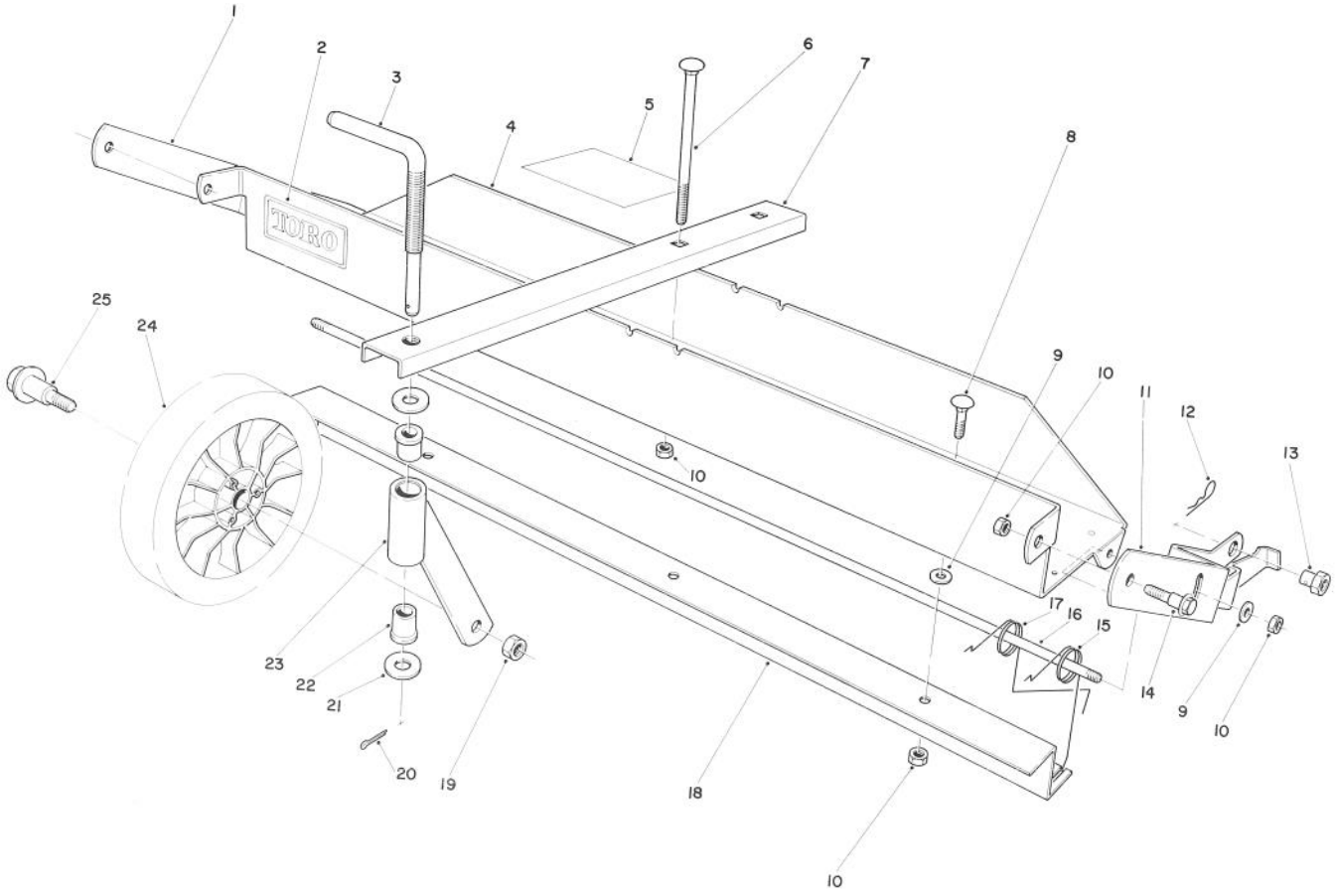

DETHATCHER KIT MODEL NO. 59126 (Optional)

Ref. No.	Part No.	Description	No. Used
1	47-6030	Frame Mount — R.H.	1
2	44-0810	Decal — Toro	1
3	47-6120	Rod — Castor Adjust	1
4	47-2390	Frame — Main (Incl. Ref. #2)	1
5	47-7500	Decal — Instruction	1
6	3230-13	Carriage Bolt	2
7	47-6090	Castor Frame	1
8	3230-1	Carriage Bolt	3
9	3256-24	Washer — Plain	5
10	32153-3	Locknut	9
11	47-6020	Frame Mount — L.H.	1
12	3290-255	Hairpin Cotter	2
13	47-6130	Pivot Nut	2

Ref. No.	Part No.	Description	No. Used
14	19-1470	Screw — Shoulder	2
15	47-6040	Spring — Dethatcher	6
16	47-6050	Rod — Spring Support	1
17	47-6041	Spring — Dethatcher	6
18	47-6010	Strap — Spring Guide	1
19	32146-6	Locknut	1
20	3272-11	Cotter Pin	1
21	3256-4	Washer	2
22	47-6110	Bushing — Flange	2
23	47-6060	Castor Tube & Support	1
24	34-0380	Wheel Assembly	1
25	27-6230	Wheel Bolt	1
*	11-5239	Loose parts	1

*Not Illustrated

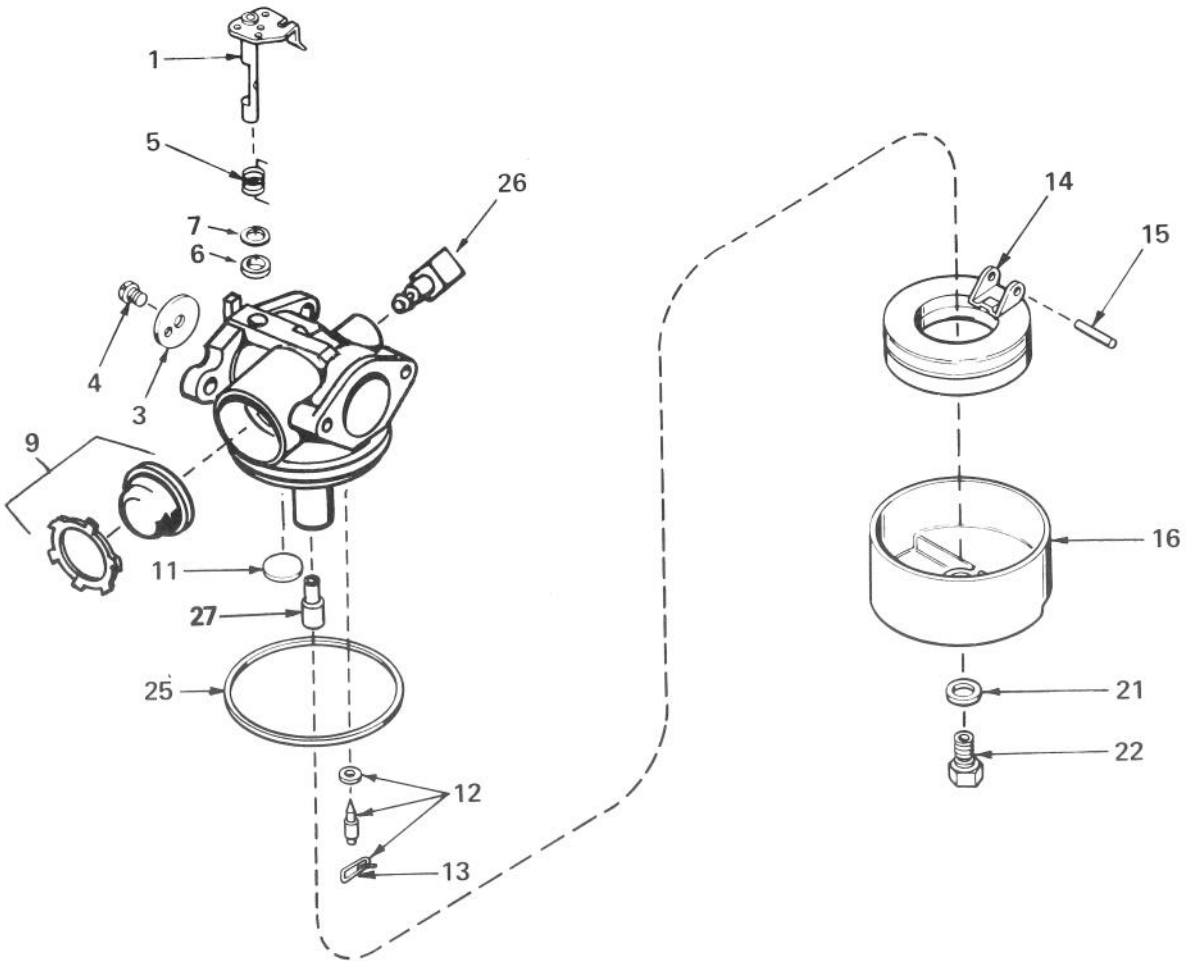

CARBURETOR NO. 632050A

Ref. No.	Part No.	Description	No. Used
1	631615	Shaft & Lever Assy., Throttle	1
3	631616	Shutter, Throttle	1
4	650506	Screw, Throttle Shutter	1
5	631767	Spring, Return	1
6	631971	Seal, Dust	1
7	631184	Washer, Flat	1
9	632047	Bulb & Retainer, Primer	1
11	631027	Plug, Welch	1
12	631021	Inlet Needle, Seat & Clip Assy. (Incl. # 13)	1

Ref. No.	Part No.	Description	No. Used
13	631022	Clip, Inlet Needle	1
14	632019	Float, Carburetor	1
15	631024	Shaft, Float	1
16	631700	Bowl, Float	1
21	631334	Gasket, Bowl-to-body	1
22	631935	Nut, Float bowl	1
25	631028	Gasket, Bowl-to-body	1
26	631807	Fitting, Fuel Inlet	1
27	632158	Spacer	1

ENGINE TECUMSEH MODEL TNT100-10085E

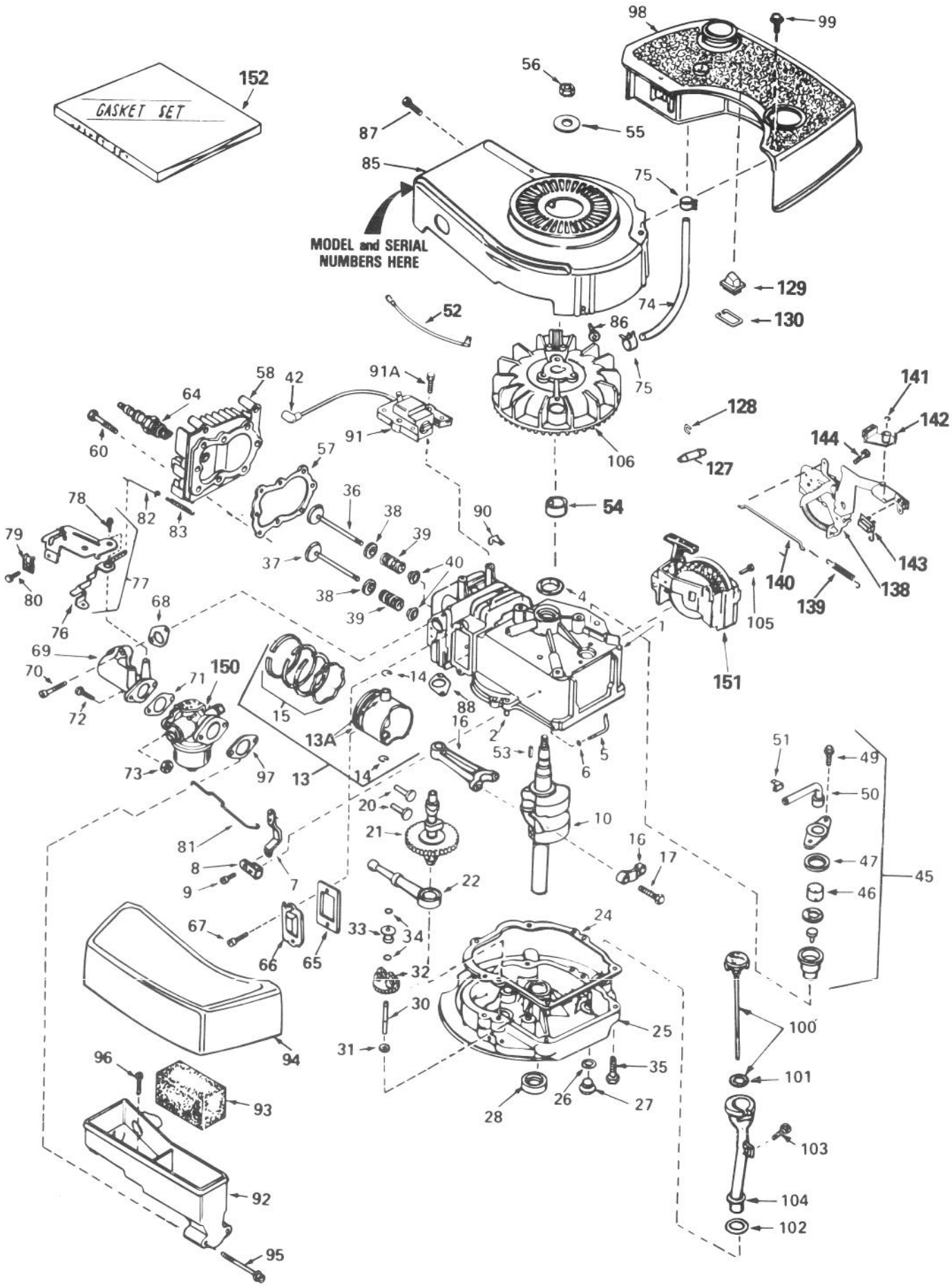

ENGINE TECUMSEH MODEL TNT100-10085E

Ref. No.	Part No.	Description	No. Used
1	34429A	Cylinder Assy. (Inc. #2&4)	1
2	26727	Pin, Dowel	2
4	32600	Seal, Oil	1
5	30589	Rod, Governor (Incl. #6)	1
6	28277	Washer, Flat	1
7	32651	Lever, Governor	1
8	31335	Clamp, Governor Lever	1
9	650548	Screw, Hex Washer Hd.	1
10	34440	Crankshaft	1
13	34851	Piston, Pin & Ring Assy. (Std.) (Incl. #13A, 14 & 15)	1
13	34852	Piston, Pin & Ring Assy. (.010 oversize) (Incl. #13A, 14 & 15)	1
13	34853	Piston, Pin & Ring Assy. (.020 oversize) (Incl. #13A, 14 & 15)	1
13A	32603B	Piston & Pin Assy. (Std.) (Inc. #14)	1
13A	32604B	Piston & Pin Assy. (.010 oversize) (Incl. #14)	1
13A	32605B	Piston & Pin Assy. (.020 oversize) (Inc. #14)	1
14	20381	Ring, Piston Pin Retaining	2
15	34854	Ring Set, Piston (Std.)	1
15	34855	Ring Set, Piston (.010 oversize)	1
15	34856	Ring Set, Piston (.020 oversize)	1
16	30963B	Rod Assy., Connecting (Incl. #17)	1
17	32610A	Bolt, Connecting Rod	2
20	27241	Lifter, Valve	2
21	33553	Camshaft (Mech. Compression Release)	1
22	29914	Pump Assy., Oil	1
24	*26750A	Gasket, Mounting Flange	1
25	30594B	Flange Assy., Mounting (Incl. #26 thru 30)	1
26	*28833	Gasket, Oil Drain Plug	1
27	27244	Plug, Oil Drain	1
28	26208	Seal, Oil	1
30	30574	Shaft, Mechanical Governor	1
31	30590A	Washer, Flat	1
32	30591	Gear Assy., Governor (Incl. #31)	1
33	30588A	Spool, Governor	1
34	29193	Ring, Retaining	2
35	650488	Screw, Hex Hd.	6
36	29314B	Valve, Intake (Std.) (Incl. #40)	1
36	29315C	Valve, Intake (1/32" oversize) (Incl. #40)	1
37	29313C	Valve, Exhaust (Std.) (Incl. #40)	1
37	29315C	Valve, Exhaust (1/32" oversize (Incl. #40)	1
38	31671	Cap, Upper Valve Spring	2
39	31672	Spring, Valve	2
40	31673	Cap, Lower Valve Spring	2
42	610118	Cover, Spark Plug	1
45	34214A	Breather Assy. (Incl. #46 thru 51)	1
46	33734	Element, Breather	1
47	*33735	Gasket, Breather	1
49	30200	Screw, Hex Washer Hd. Self-tap	2
50	33886	Tube, Breather	1
51	33887	Clip, Breather Tube	1
52	34961	Wire, Ground	1
53	611004	Key, Flywheel (Solid State)	1
54	34080	Spacer, Flywheel Key	1
55	650815	Washer, Belleville	1
56	650816	Nut, Flywheel	1

Ref. No.	Part No.	Description	No. Used
57	*33015	Gasket, Cylinder Head	1
58	34342	Head, Cylinder	1
60	6021A	Screw, Hex Flange Hd.	8
64	33636	Plug, Spark (Champion J-8 or equivalent) *Except for Canada*	1
64	34251 Canada	Resistor Spark Plug (Canadian Regulations require RJ-17LM resistor spark plug)	1
65	*27234	Gasket, Valve Spring Cover	1
66	32755	Cover, Valve Spring Box	1
67	650128	Screw, Fil. Hd.	2
68	*34690	Gasket, Intake Pipe	1
69	33004A	Pipe, Intake (Incl. #68)	1
70	650451	Screw, Hex Hd.	2
71	*31688	Gasket, Carburetor	1
72	6201	Screw, Hex Hd.	2
73	29752	Nut & Lockwasher Assy.	2
74	34682	Line, Fuel	1
75	26460	Clamp, Fuel Line	2
76	34310	Lever, Control	1
77	33889A	Control Assy., Speed (Incl. #76&78)	1
78	650804	Screw, Hex Washer Hd. Shoulder Self-tap	1
79	27793	Clip, Conduit	1
80	28942	Screw, Hex Washer Hd.	1
81	34336	Link, Governor-to-throttle	1
82	33151	Link, Governor Spring	1
83	33890	Spring, Governor	1
85	33891B	Housing, Blower	1
86	650561	Screw, Hex Washer Hd. Durlok	2
87	30200	Screw, Hex Washer Hd. Self-tap	2
88	*30081	Gasket, Exhaust	1
90	29443	Clip, Fuel Line	2
91	34443A	Lamination & Coil Assy. (Solid State) (Incl. #42)	1
91A	650814	Screw, Hex Hd.	2
92	33895	Body, Air Cleaner	1
93	33896	Filter, Air Cleaner	1
94	33897	Cover, Air Cleaner	1
95	650762	Screw, Fil. Hd.	2
96	650784	Screw, Hex Hd. Taptite w/flatwasher	1
97	*33051	Gasket, Air Cleaner	1
98	35028	Tank, Fuel	1
99	28763	Screw, Hex Washer Hd.	2
100	33894A	Dipstick, Oil (Incl. #101)	1
101	33590	"O" Ring	1
102	34265	Gasket, Fill Tube	1
103	650562	Screw, Hex Washer Hd.	1
104	34380	Tube, Oil Fill	1
105	650802	Screw, Hex Washer Hd. Taptite	2
106	611046	Flywheel	1
127	35026	Coupling, Starter Rope	1
128	35025	Staple, Rope Retainer (Strip of 25 Pieces)	1
129	34983	Pulley Assy., Starter	1
130	34984	Retainer, Pulley	1
138	35015	Bracket Assy.	1
139	34965	Spring, Extension	1
140	34966	Link, Control	1
141	32309	Ring, Retaining	1
142	34968	Lever, Brake	1
143	610973	Terminal Assy.	1
144	650837	Screw, Hex Hd. E.T.	1
150	632050A	Carburetor (Incl. #71)	1
151	590532	Starter, Sidemount rewind	1
152	33906A	Gasket Set (Incl. Items Marked*)	1

*Indicates parts included in Gasket Set, Ref. No. 152.

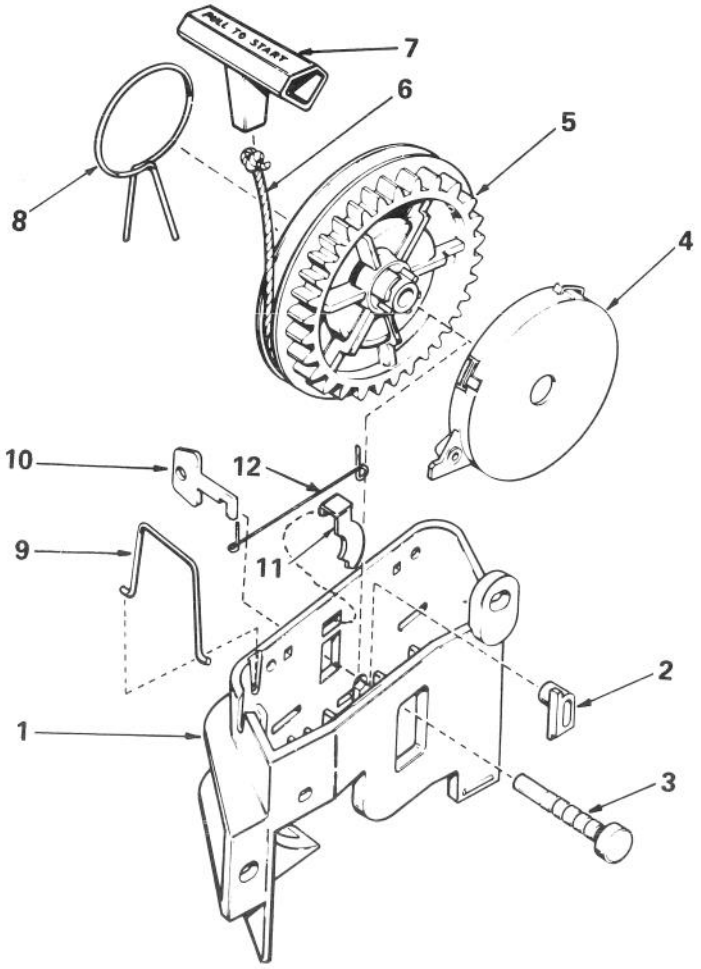

STARTER ASSEMBLY NO. 590532

Ref. No.	Part No.	Description	No. Used
1	590523	Bracket, Starter	1
2	590524	Pawl, Locking (Not used on all engine models)	1
3	590525	Pin, Pulley	1
4	590526	Spring Assy., Rewind (Incl. #3)	1
5	590522	Pulley, Starter	1
6	590535	Rope, Starter (Length 95" & 9/64" Dia.)	1

Ref. No.	Part No.	Description	No. Used
7	590452	Handle, Starter	1
8	590554	Spring, Brake	1
9	590529	Clip, Rope	1
10	590530	Key (Not used on all engine models)	1
11	590533	Pawl, Starter	1
12	590534	Spring, Pawl	1