Form No. 3457-693 Rev B

Front Lift Frame

Sand Pro®/Infield Pro® 5040 Traction Unit

Model No. 08712—Serial No. 311000336 and Up

Operator's Manual

This product complies with all relevant European directives. For details, please see the Declaration of Incorporation (DOI) at the back of this publication.

Note: Determine the left and right sides of the machine from the normal operating position.

Setup

Loose Parts

Use the chart below to verify that all parts have been shipped.

Procedure	Description	Qty.	Use
1	No parts required	–	Prepare the machine.
2	No parts required	–	Remove the shrouds.
3	No parts required	–	
4	Straight hydraulic fitting with O-ring 90° hydraulic fitting with O-ring Lift valve Valve plate Bolt (1/4 x 3 inches) Locknut (1/4 inch) Bolt (#10 x 1-1/4 inches) Locknut (#10) Lift lever	2 2 1 1 3 3 2 2 1	Install the lift valve (Model 08705).
5	Straight hydraulic fitting with O-ring 90° hydraulic fitting with O-ring Lift valve Valve plate Bolt (1/4 x 3 inches) Locknut (1/4 inch) Bolt (#10 x 1-1/4 inches) Locknut (#10) Lift lever	2 2 1 1 3 3 2 2 1	Install the lift valve (Model 08745).
6	Right plow plate Left plow plate Bolt (1/2 x 2 inches) Locknut (1/2 inch) Hitch frame bracket Bolt (1/2 x 1-3/4 inches)	1 1 4 4 1 2	Install the plow plates.

© 2024—The Toro® Company
8111 Lyndale Avenue South
Bloomington, MN 55420

Register at www.Toro.com.

CE UK CA

Original Instructions (EN)
Printed in the USA
All Rights Reserved

3457-693

Procedure	Description	Qty.	Use
7	Hitch frame Bolt (3/8 x 2 inches) Nut (3/8 inch) Capscrew (3/8 x 1-1/2 inches) Locknut (3/8 inch) Cylinder pin Adapter plate Push arm tube Pin assembly Thread-forming screw Bolt (5/8 x 1-1/2 inches) Washer (1.68-inch outside diameter x 0.65-inch inside diameter) Tube Clevis pin Cotter pin	1 2 2 2 2 2 1 1 2 2 2 2 1 1 1	Install the push arms and hitch frame.
8	45° hydraulic fitting with O-ring Hydraulic cylinder 90° hydraulic fitting with O-ring Small retaining ring Pin Large retaining ring	1 1 1 1 1 2	Install the hydraulic cylinder.
9	Tube assembly Hydraulic hose (Part No. 108-8449) Hydraulic hose (Part No. 108-8453) Hydraulic hose (Part No. 108-8454) Wire hose holder Thread forming screw (5/16 x 3/4 inch) Plastic cable tie	1 1 1 1 1 2 3	Install the hydraulic hoses (Model 08705).
10	Tube assembly Hydraulic hose (Part No. 108-8449) Hydraulic hose (Part No. 108-8453) Hydraulic hose (Part No. 108-8454) Wire hose holder Thread forming screw (5/16 x 3/4 inch) Plastic cable tie	1 1 1 1 1 2 3	Install the hydraulic hoses (Model 08745).
11	Lever guide plate Flange-head screw Washer Control panel decal Control panel Knob Plastic cable tie	1 2 2 1 1 1 3	Install the control panel and lever guide plate.
12	Operator’s Manual	1	Read the documentation and store it in a safe location.

1

Preparing the Machine

No Parts Required

Procedure

1. Park the machine on a level surface.
2. Lower the attachments.
3. Engage the parking brake.
4. Shut off the engine and remove the key.

2

Removing the Shrouds

No Parts Required

Procedure

1. Raise the rear of the machine and position jacks under the rear wheel motor mounts.
2. Remove the right rear tire.
3. Remove the 4 washers and bolts mounting the control panel to the console (Figure 1).
4. Unplug the wire from the hour meter.
5. Remove the control panel (Figure 1).
6. Remove the 3 bolts securing the console to the frame (Figure 1). Remove the console by gently lifting the bottom edge of the console around the support bracket and sliding it up beyond the brake handle.

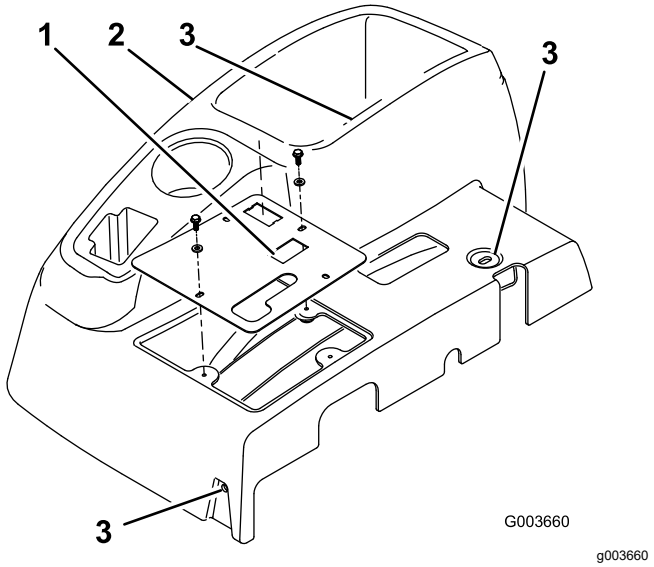

Figure 1

1. Control panel
2. Console
3. Console mounting bolt locations

7. Remove the 4 bolts securing the right hand wheel shroud to the frame and remove the shroud (Figure 2).

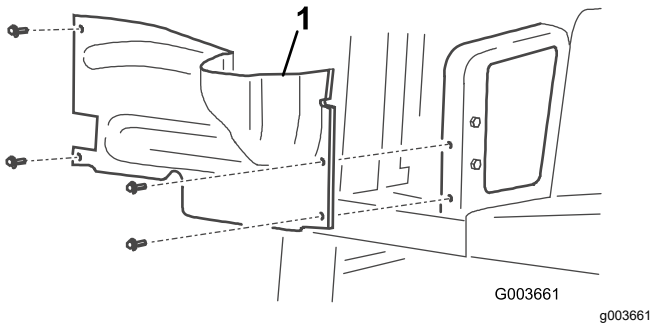

Figure 2

1. Right hand wheel shroud

8. Disconnect and remove the center shroud from the frame (Figure 3).

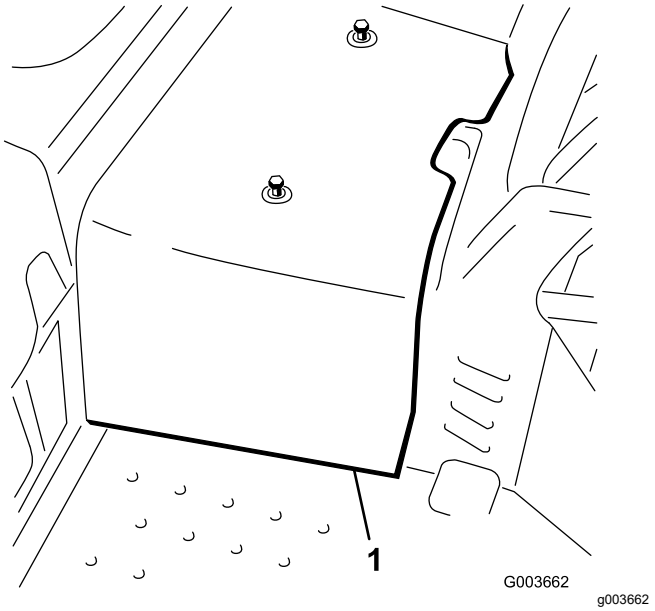

Figure 3

1. Center shroud

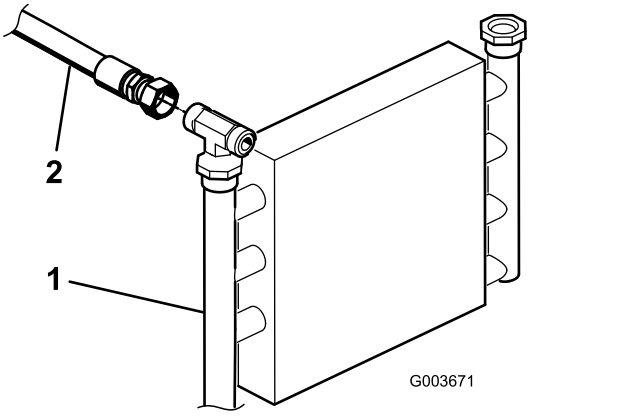

Figure 4

1. Oil cooler
2. Hydraulic tube

4. Secure the remaining hydraulic tube to the frame with the clamp and fasteners previously removed.

3

Preparing to Install the Hydraulic Components

No Parts Required

Procedure

1. Locate the hydraulic tube that goes from the oil cooler to the existing lift valve (Figure 4).
2. Remove the fasteners and tube clamp securing the hydraulic tubes to the frame.
3. Disconnect and remove the hydraulic tube from the oil cooler and the lift valve (Figure 4 and Figure 6).

   Note: You may discard this hydraulic tube.

   Note: To minimize oil loss when removing the hydraulic tube, have the replacement hose ready or cap the fitting on the cooler using one of the protective shipping caps removed from the tube assembly, Part No. 108-8447 (Figure 19).

5. If you are installing this kit to a Model 08745 machine, do the following:
   A. Remove the 3 bolts and nuts securing the existing lift valve to the frame, and separate it from the frame to allow for removal of the T-fitting (340-94) as shown in Figure 5.
   B. Disconnect the hydraulic tube (108-8415) from the 90° fitting (340-77) on left side of existing lift valve.
   C. Disconnect the hydraulic hose (144-1367) from the T-fitting (340-94) as shown in Figure 6.
   D. Loosen the T-fitting (340-94) on the right side of the existing lift valve.
   E. Remove the T-fitting (340-94) from existing valve and retain for later installation.

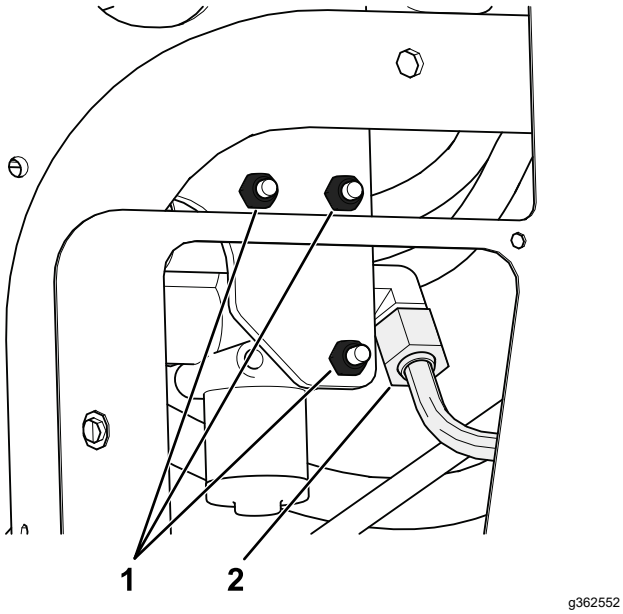

Figure 5

1. Remove these bolts and nuts.
2. Disconnect this hydraulic tube (108-8415) from the 90° fitting.

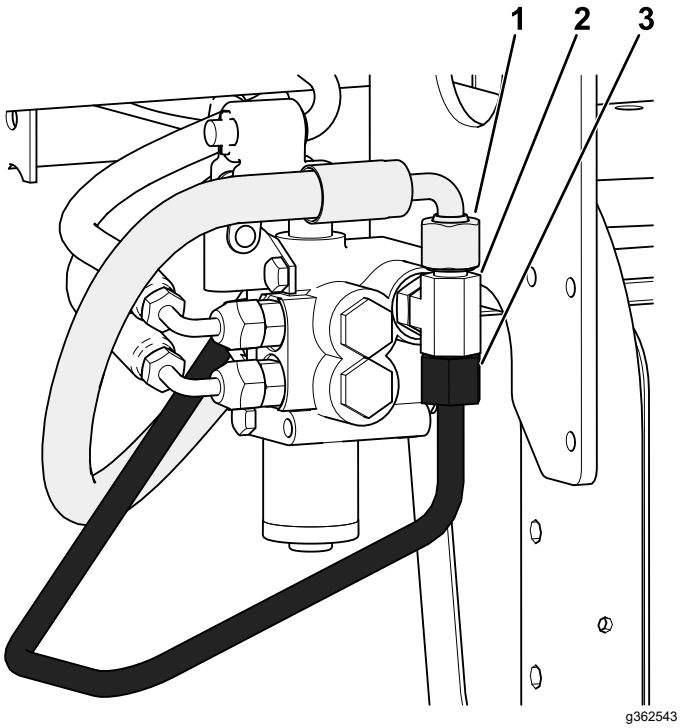

Figure 6

1. Disconnect this hydraulic hose (144-1367) from the T-fitting.
2. Disconnect this T-fitting (340-94) from the existing valve.
3. Disconnect and discard and discard this hydraulic tube connected to the T-fitting.

4

Installing the Lift Valve

Model 08705 Only

Parts needed for this procedure:

2	Straight hydraulic fitting with O-ring
2	90° hydraulic fitting with O-ring
1	Lift valve
1	Valve plate
3	Bolt (1/4 x 3 inches)
3	Locknut (1/4 inch)
2	Bolt (#10 x 1-1/4 inches)
2	Locknut (#10)
1	Lift lever

Procedure

1. Thread both 90° fittings and the 2 straight hydraulic fittings into the new lift valve as shown in Figure 7.

   Important: **Do not tighten the 90° fittings at this time. Ensure that all O-rings are lubricated and properly positioned on the fittings before installation.**

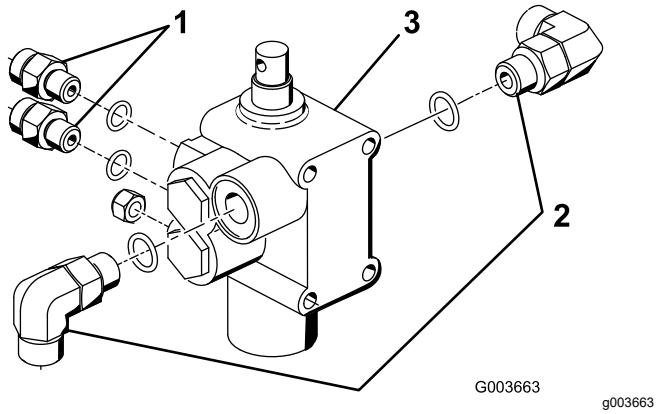

Figure 7

1. Straight fitting
2. 90° fitting
3. Lift valve

2. Mount the valve assembly, pivot bracket, and valve plate to the frame with 3 bolts (1/4 x 3 inches) and 3 locknuts (Figure 8). Position the valve plate against the front of the frame member when mounting, and torque the fasteners to 10 to 12 N·m (90 to 110 in-lb).

   Note: The valve installation is very similar to the existing valve that is already installed.

3. Loosely mount the pivot lever assembly to the valve spool and to the offset link with 2 bolts (#10 x 1-1/4 inch) and 2 locknuts (Figure 8).

   Note: Do not tighten the fasteners at this time.

   Note: Mount the offset link to the rear hole of the pivot.

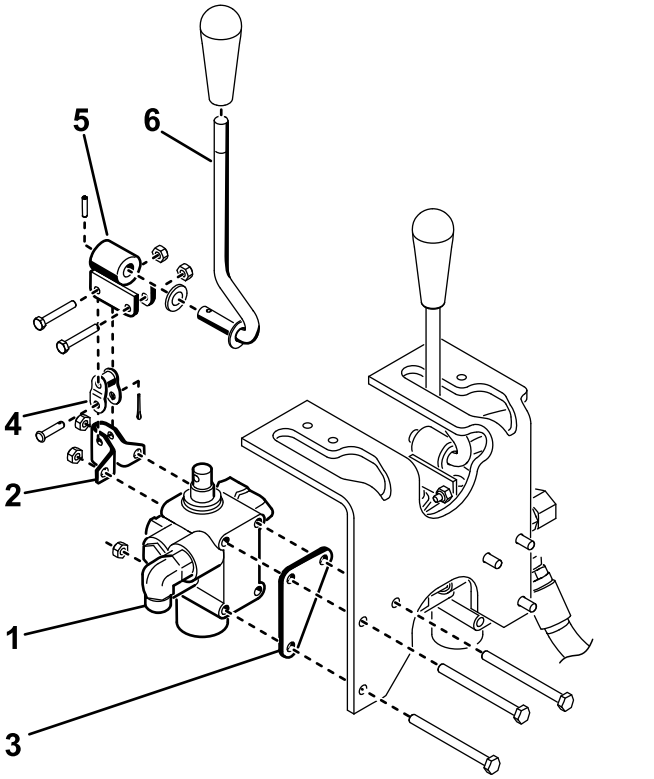

Figure 8

1. Valve assembly
2. Pivot bracket
3. Valve plate
4. Offset link
5. Pivot
6. Lever

5

Installing the Lift Valve

Model 08745 Only

Parts needed for this procedure:

2	Straight hydraulic fitting with O-ring
2	90° hydraulic fitting with O-ring
1	Lift valve
1	Valve plate
3	Bolt (1/4 x 3 inches)
3	Locknut (1/4 inch)
2	Bolt (#10 x 1-1/4 inches)
2	Locknut (#10)
1	Lift lever

Procedure

1. Thread a 90° fitting into the existing lift valve where the T-fitting was removed.

   Important: **Tighten only the straight fittings at this time. Ensure that all O-rings are lubricated and properly positioned on the fittings before installation.**

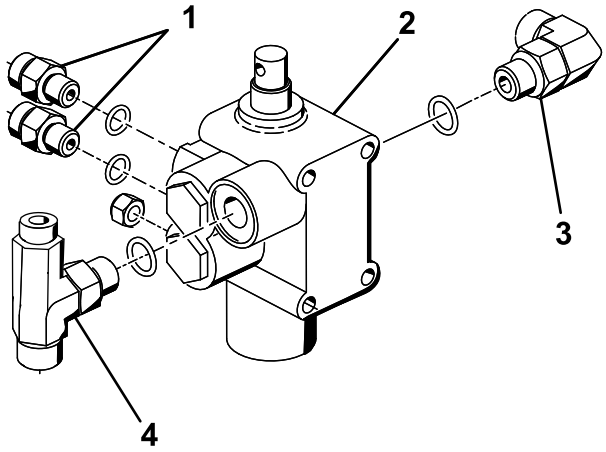

g362424

Figure 9

1. Straight fitting
2. 90° fitting
3. Lift valve
4. T-fitting

2. Install the existing lift valve with the previously removed hardware and torque the fasteners to 10 to 12 N·m (90 to 110 in-lb).
3. Thread a 90° fitting, the 2 straight hydraulic fittings, and the T-fitting removed from the existing valve in 3 Preparing to Install the Hydraulic Components (page 4) into the new lift valve as shown in Figure 9.
4. Mount the valve assembly, pivot bracket, and valve plate to the frame with 3 bolts (1/4 x 3 inches) and 3 locknuts (Figure 10). Position the valve plate against the front of the frame member when mounting, and torque the fasteners to 10 to 12 N·m (90 to 110 in-lb).

   Note: The valve installation is very similar to the valve currently installed.
5. Loosely mount the pivot lever assembly to the valve spool and to the offset link with 2 bolts (#10 x 1-1/4 inch) and 2 locknuts (Figure 10).

   Note: Do not tighten the fasteners at this time.

   Note: Mount the offset link to the rear hole of the pivot.

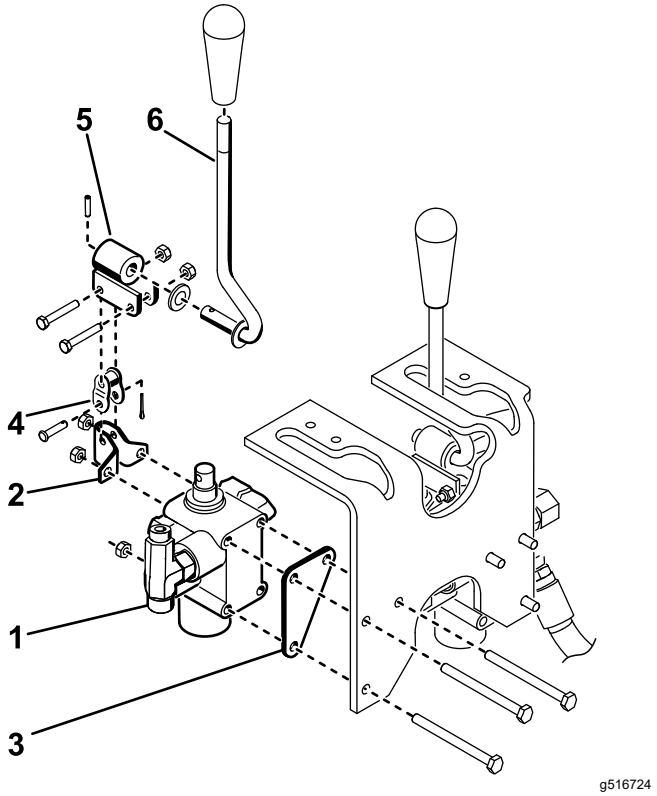

g516724

Figure 10

1. Valve assembly
2. Pivot bracket
3. Valve plate
4. Offset link
5. Pivot
6. Lever

6

Installing the Plow Plates

Parts needed for this procedure:

1	Right plow plate
1	Left plow plate
4	Bolt (1/2 x 2 inches)
4	Locknut (1/2 inch)
1	Hitch frame bracket
2	Bolt (1/2 x 1-3/4 inches)

Procedure

1. Loosely mount the right hand plow plate to the right side of the caster fork with 2 bolts (1/2 x 2 inches) and locknuts as shown in Figure 11.

   Note: Do not tighten the fasteners yet.
2. Repeat the procedure with the left hand plow plate (Figure 11).
3. Jack up the front of the machine until the front wheel is off the floor.
4. Remove and discard the 2 bolts securing the front of the steering pivot to the top of the caster fork (Figure 11).
5. Using the caster fork and steering pivot mounting holes, mount the hitch frame bracket to the underside of the caster fork with 2 bolts (1/2 x 1-3/4 inches); refer to Figure 11.

   Note: It may be required to partially deflate the tire to gain clearance. The wheel motor hydraulic hose should not rest on top of the hitch frame bracket.

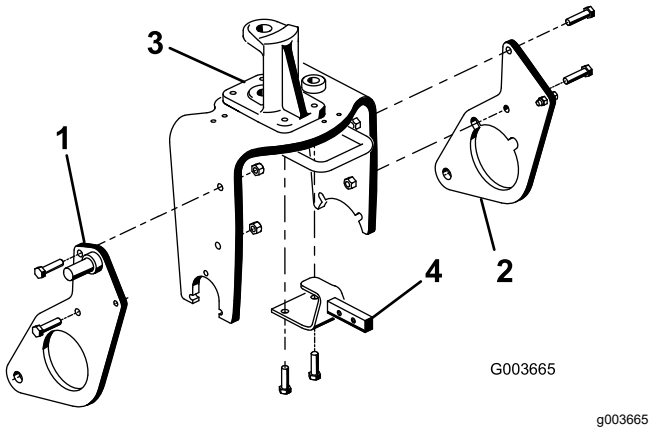

Figure 11

1. Right plow plate
2. Left plow plate
3. Steering pivot
4. Hitch frame bracket

7

Installing the Push Arms and Hitch Frame

Parts needed for this procedure:

1	Hitch frame
2	Bolt (3/8 x 2 inches)
2	Nut (3/8 inch)
2	Capscrew (3/8 x 1-1/2 inches)
2	Locknut (3/8 inch)
2	Cylinder pin
1	Adapter plate
1	Push arm tube
2	Pin assembly
2	Thread-forming screw
2	Bolt (5/8 x 1-1/2 inches)
2	Washer (1.68-inch outside diameter x 0.65-inch inside diameter)
1	Tube
1	Clevis pin
1	Cotter pin

Procedure

1. Lower the machine so that the front wheel is on the floor.
2. Secure the push arm tube to the adapter plate with 2 pin assemblies and secure the

pin assemblies to the adapter plates with 2 thread-forming screws.

Note: Position the components as shown in Figure 12.

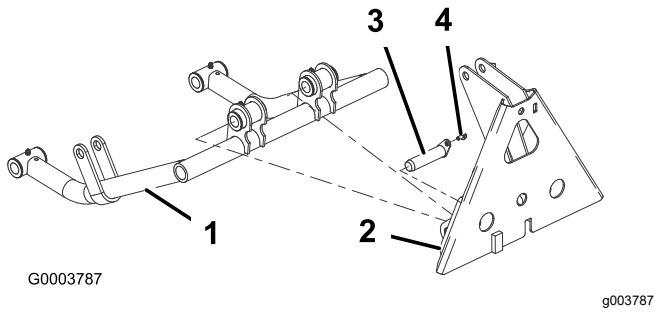

Figure 12

1. Push arm tube
2. Adapter plate
3. Pin assembly
4. Thread-forming screw

3. Insert a cylinder pin into each push arm tube as shown in Figure 13.
4. Insert the push arm tubes onto the right and left plow plates aligning the cylinder pin guides with the holes in the plow plates (Figure 13).

   Note: If unable to get the push arm tubes around the plow plates, loosen the nuts securing the plow plates to the caster fork.
5. Mount each cylinder pin to each plow plate with a bolt (5/8 x 1-1/2 inches) and a washer (1.68-inch outside diameter x 0.65-inch inside diameter) as shown in Figure 13.

   Note: Torque the bolts to 203 N-m (150 ft-lb).

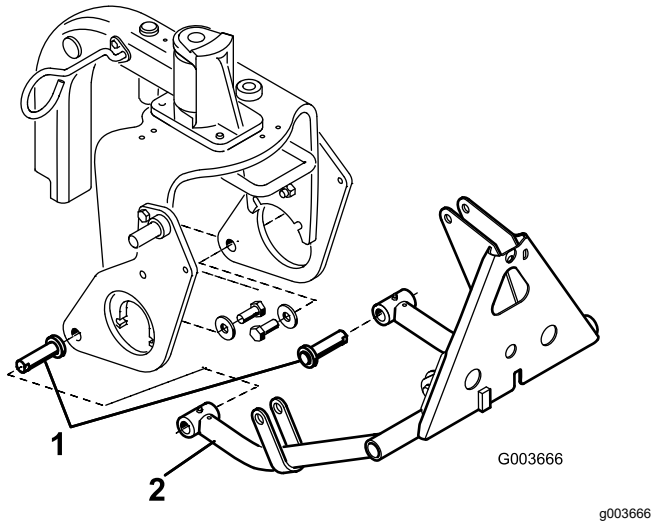

Figure 13

1. Cylinder pin
2. Push arm tube

6. Mount the top of the hitch frame to the hitch frame bracket with 2 bolts (3/8 x 2 inches) and nuts (Figure 14).
7. Mount the hitch frame tubes to the plow plates with bolts (3/8 x 1-1/2 inches) and nuts (Figure 14), and tighten the fasteners.

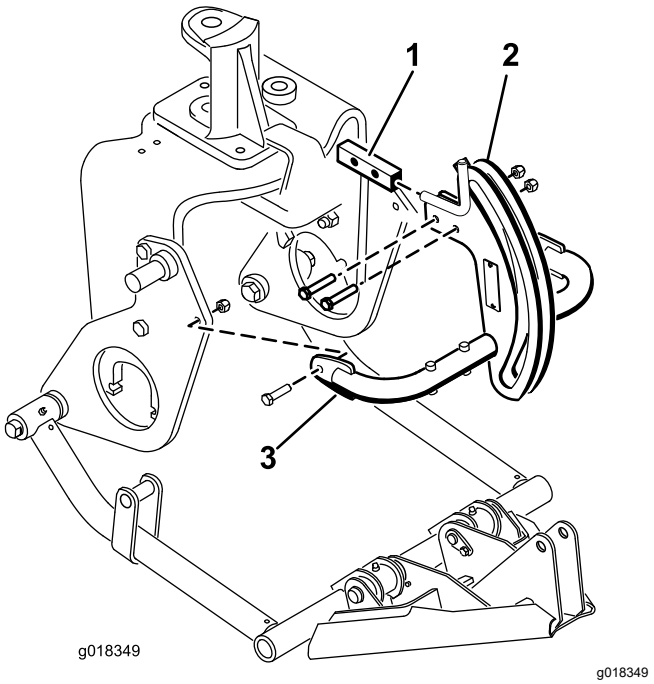

Figure 14

1. Hitch frame bracket
2. Hitch frame
3. Hitch frame tube

8. Secure the frame adapter to the hitch frame with a tube, a clevis pin, and a cotter pin (Figure 15).

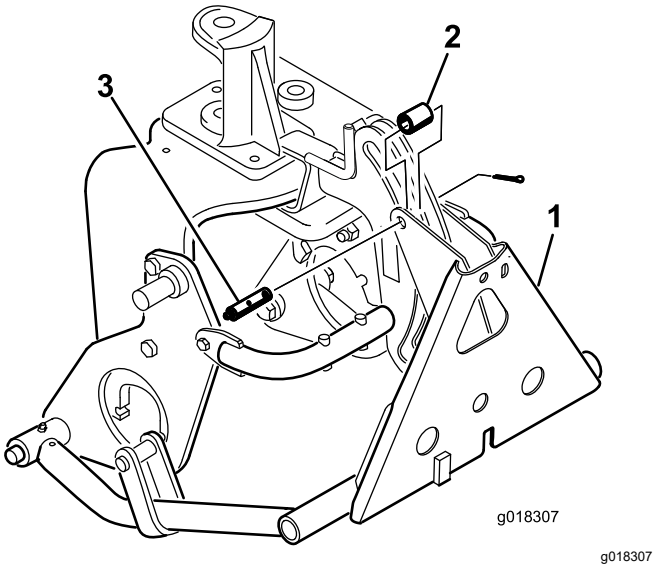

Figure 15

1. Frame adapter
2. Tube
3. Clevis pin with grease fitting

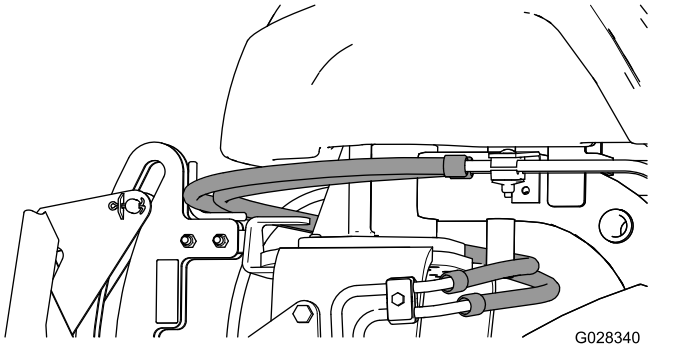

Figure 16

Important: **Ensure that the existing hoses are routed above the guide, as shown in Figure 16.**

8

Installing the Hydraulic Cylinder

Parts needed for this procedure:

1	45° hydraulic fitting with O-ring
1	Hydraulic cylinder
1	90° hydraulic fitting with O-ring
1	Small retaining ring
1	Pin
2	Large retaining ring

Procedure

1. Thread a 90° fitting into the upper port in the hydraulic cylinder. Position the fitting as shown in Figure 17.

   Note: Make sure that all O-rings are lubricated and properly positioned on fittings before installation.

   Note: To prevent contamination to the hydraulic fittings or hoses, do not remove the caps from the fittings or hoses until they are installed.

2. Thread a 45° fitting into the lower port in the hydraulic cylinder. Position the fitting as shown in Figure 17.

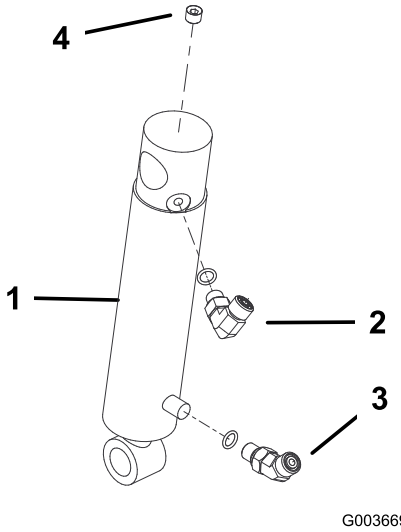

Figure 17

1. Hydraulic cylinder
2. 90° fitting
3. 45° fitting
4. Plug (1/8 inch)

3. Mount the top of the hydraulic cylinder barrel to the pin on the right-hand plow plate with a retaining ring (Figure 18).

   Note: Position the cylinder hydraulic ports forward.

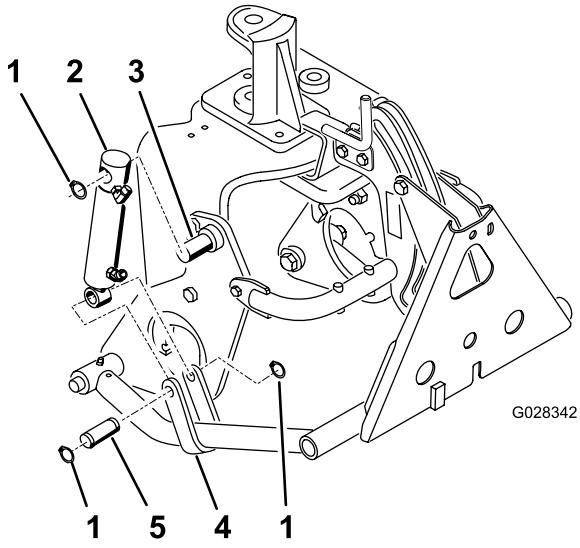

Figure 18

1. Retaining ring
2. Hydraulic cylinder
3. Pin (on plow plate)
4. Push arm strap
5. Pin

4. Mount the cylinder rod to the push arm straps with a pin and 2 retaining rings (Figure 18).

9

Installing the Hydraulic Hoses

Model 08705 Only

Parts needed for this procedure:

1	Tube assembly
1	Hydraulic hose (Part No. 108-8449)
1	Hydraulic hose (Part No. 108-8453)
1	Hydraulic hose (Part No. 108-8454)
1	Wire hose holder
2	Thread forming screw (5/16 x 3/4 inch)
3	Plastic cable tie

Procedure

1. Connect the tube assembly (Part No. 108-8447) to the 90° fitting on the left side of the new valve and the vacated fitting on the existing lift valve (Figure 19).
2. Connect the 45° fitting end of hydraulic hose (Part No. 108-8449) to the 90° fitting on the right side of the valve and the straight end of the hose to the vacant oil cooler fitting (Figure 19). Refer to Figure 20 and Figure 21 for hose routing.
3. Mount the wire hose holder to the left frame tube with 2 thread-forming screws (5/16 x 3/4 inch); refer to Figure 19.
4. Connect the short 90° fitting end of hydraulic hose (Part No. 108-8453) to the top straight fitting on the rear of the valve. Route the hose through the wire hose holder and connect the straight end of the hose to the top hydraulic cylinder fitting (Figure 19). Refer to Figure 20 and Figure 21 for hose routing.
5. Connect the long 90° fitting end of the hydraulic hose (Part No. 108-8454) to the bottom straight fitting on the rear of the valve. Route the hose through the wire hose holder and connect the straight end of the hose to the bottom hydraulic cylinder fitting (Figure 19). Refer to Figure 20 and Figure 21 for hose routing.

   Important: **Ensure that the hoses are routed away from any sharp, hot, or moving components.**
6. Tighten all fasteners and fittings.
7. Using cable ties, secure the hoses to the machine at the locations shown in Figure 20 and Figure 21.

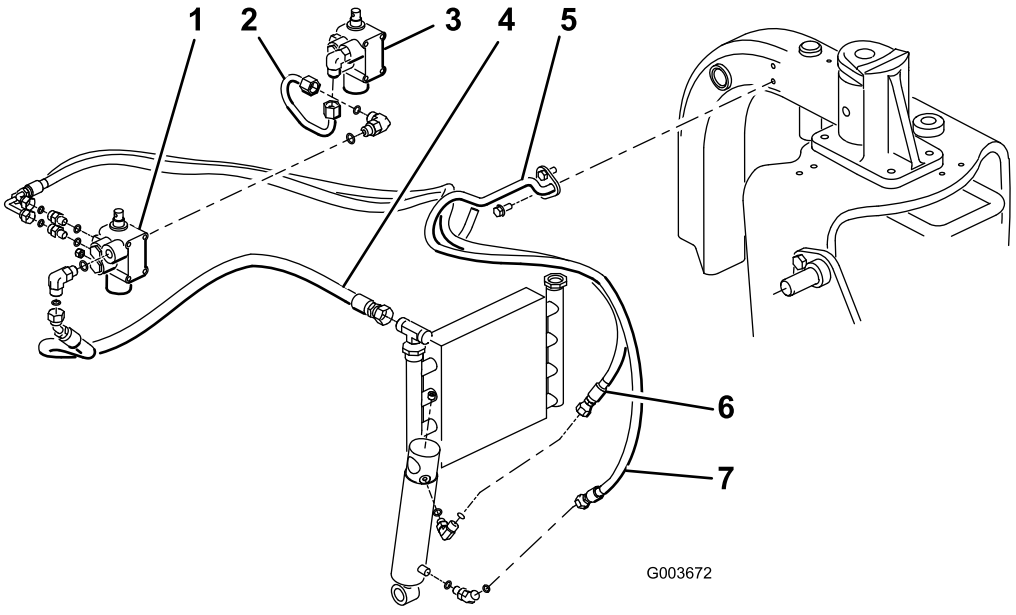

g003672

Figure 19
Model 08705

1. New valve
2. Tube assembly (Part No. 108-8447)
3. Existing valve
4. Hydraulic hose (Part No. 108-8449)
5. Wire hose holder
6. Hydraulic hose (Part No. 108-8453)
7. Hydraulic hose (Part No. 108-8454)

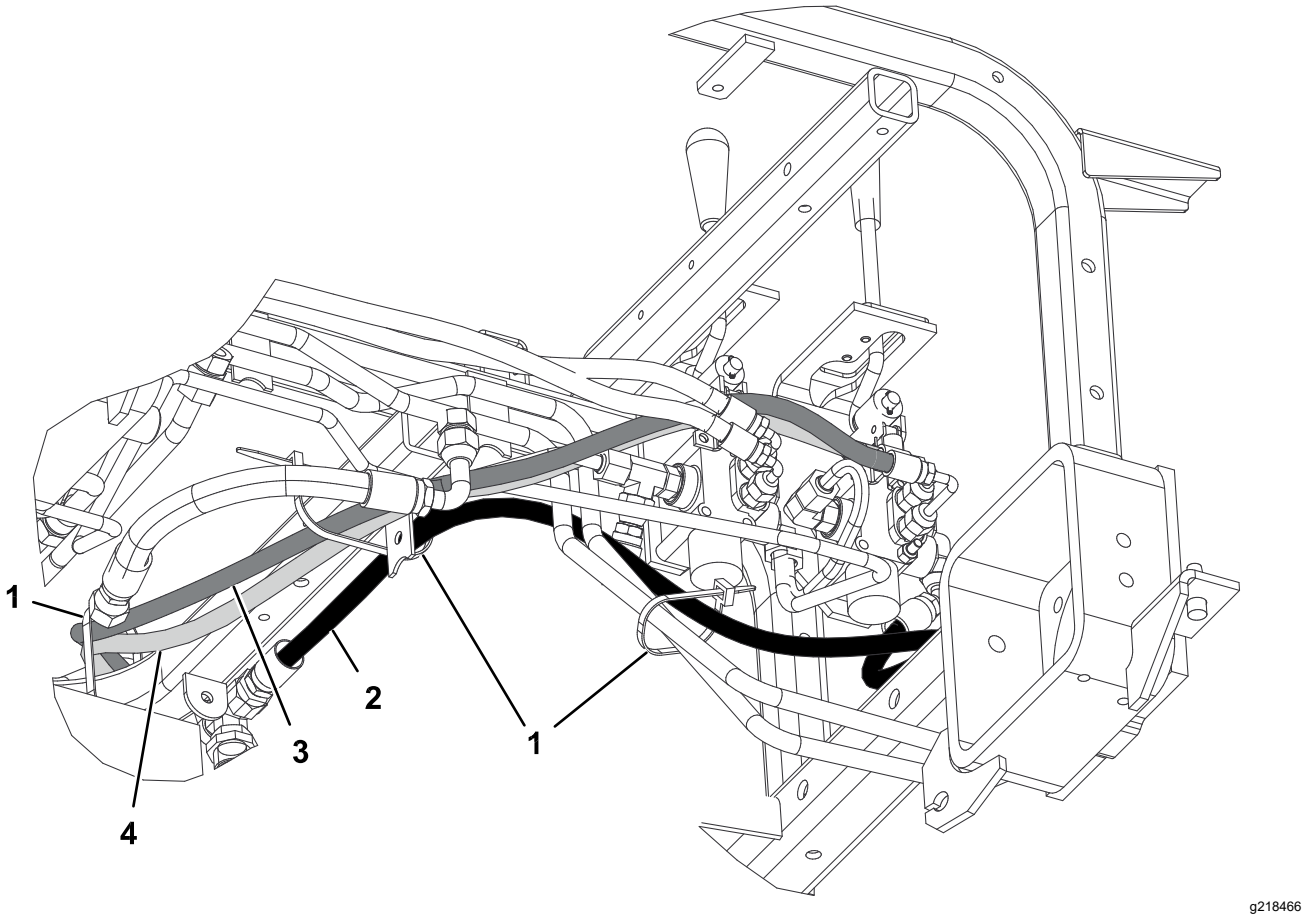

Figure 20
Model 08705

1. Cable tie
2. Hydraulic hose (Part No. 108-8449)
3. Hydraulic hose (Part No. 108-8453)
4. Hydraulic hose (Part No. 108-8454)

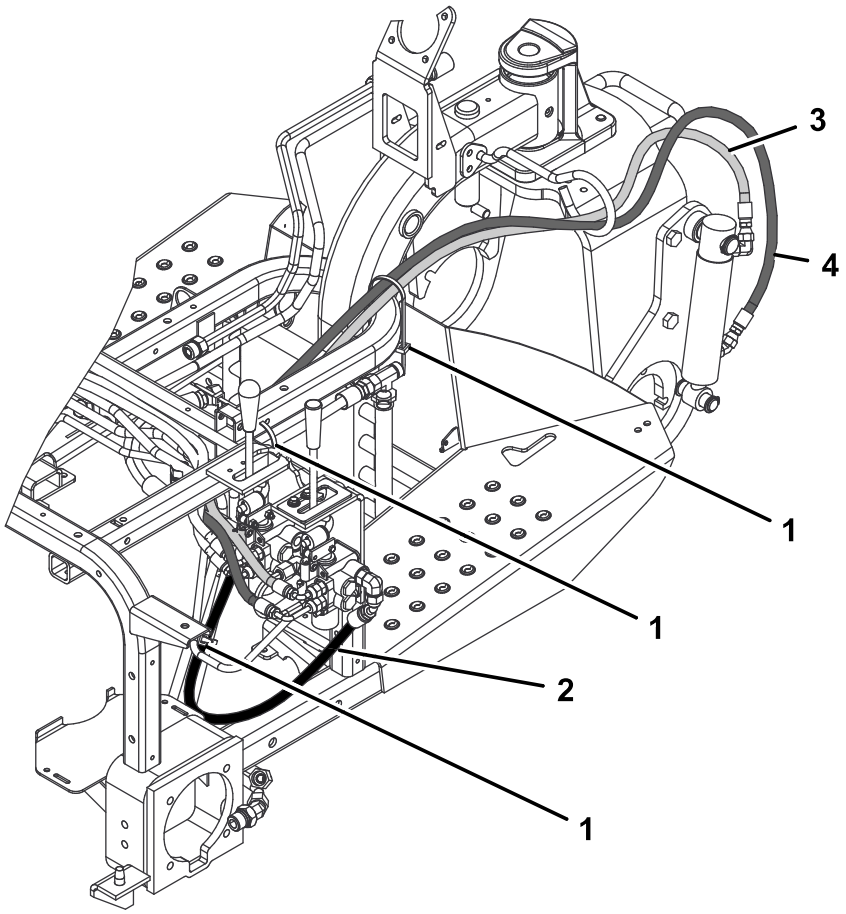

g218467

Figure 21
Model 08705

1. Cable tie
2. Hydraulic hose (Part No. 108-8449)
3. Hydraulic hose (Part No. 108-8453)
4. Hydraulic hose (Part No. 108-8454)

10

Installing the Hydraulic Hoses

Model 08745 Only

Parts needed for this procedure:

1	Tube assembly
1	Hydraulic hose (Part No. 108-8449)
1	Hydraulic hose (Part No. 108-8453)
1	Hydraulic hose (Part No. 108-8454)
1	Wire hose holder
2	Thread forming screw (5/16 x 3/4 inch)
3	Plastic cable tie

Procedure

1. Connect the tube assembly (Part No. 108-8447) to the 90° fitting on the left side of the new valve and the newly installed 90° fitting on the existing lift valve (Figure 22).
2. Connect the T-fitting with the 45° end of hydraulic hose (Part No. 108-8449) to the open side of the T-fitting on the right side of the valve and the straight end of the hose to the vacant oil cooler fitting (Figure 22). Refer toFigure 23 and Figure 24 for hose routing.
3. Mount the wire hose holder to the left frame tube with 2 thread-forming screws (5/16 x 3/4 inch); refer to Figure 22.
4. Connect the short 90° fitting end of hydraulic hose (Part No. 108-8453) to the top straight fitting on the rear of the valve. Route the hose through the wire hose holder and connect the straight end of the hose to the top hydraulic cylinder fitting (Figure 22). Refer to Figure 23 and Figure 24 for hose routing.
5. Connect the long 90° fitting end of the hydraulic hose (Part No. 108-8454) to the bottom straight fitting on the rear of the valve. Route the hose through the wire hose holder and connect the straight end of the hose to the bottom hydraulic cylinder fitting (Figure 22). Refer to Figure 23 and Figure 24 for hose routing.
6. Connect hydraulic hose (Part No. 144-1367) onto the top of the newly installed T-fitting (Part No. 340-94) on the right side of the new lift valve.

Important: **Ensure that the hoses are routed away from any sharp, hot, or moving components.**

7. Tighten all fasteners and fittings.
8. Using cable ties, secure the hoses to the machine at the locations shown in Figure 23 and Figure 24.

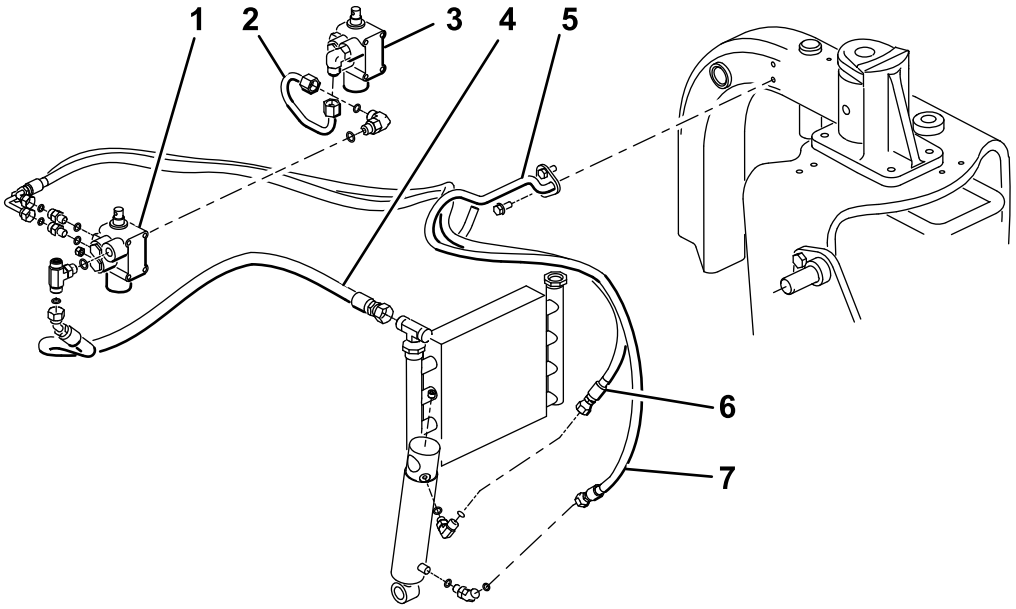

g362578

Figure 22

Model 08745

1. New valve
2. Tube assembly (Part No. 108-8447)
3. Existing valve
4. Hydraulic hose (Part No. 108-8449)
5. Wire hose holder
6. Hydraulic hose (Part No. 108-8453)
7. Hydraulic hose (Part No. 108-8454)

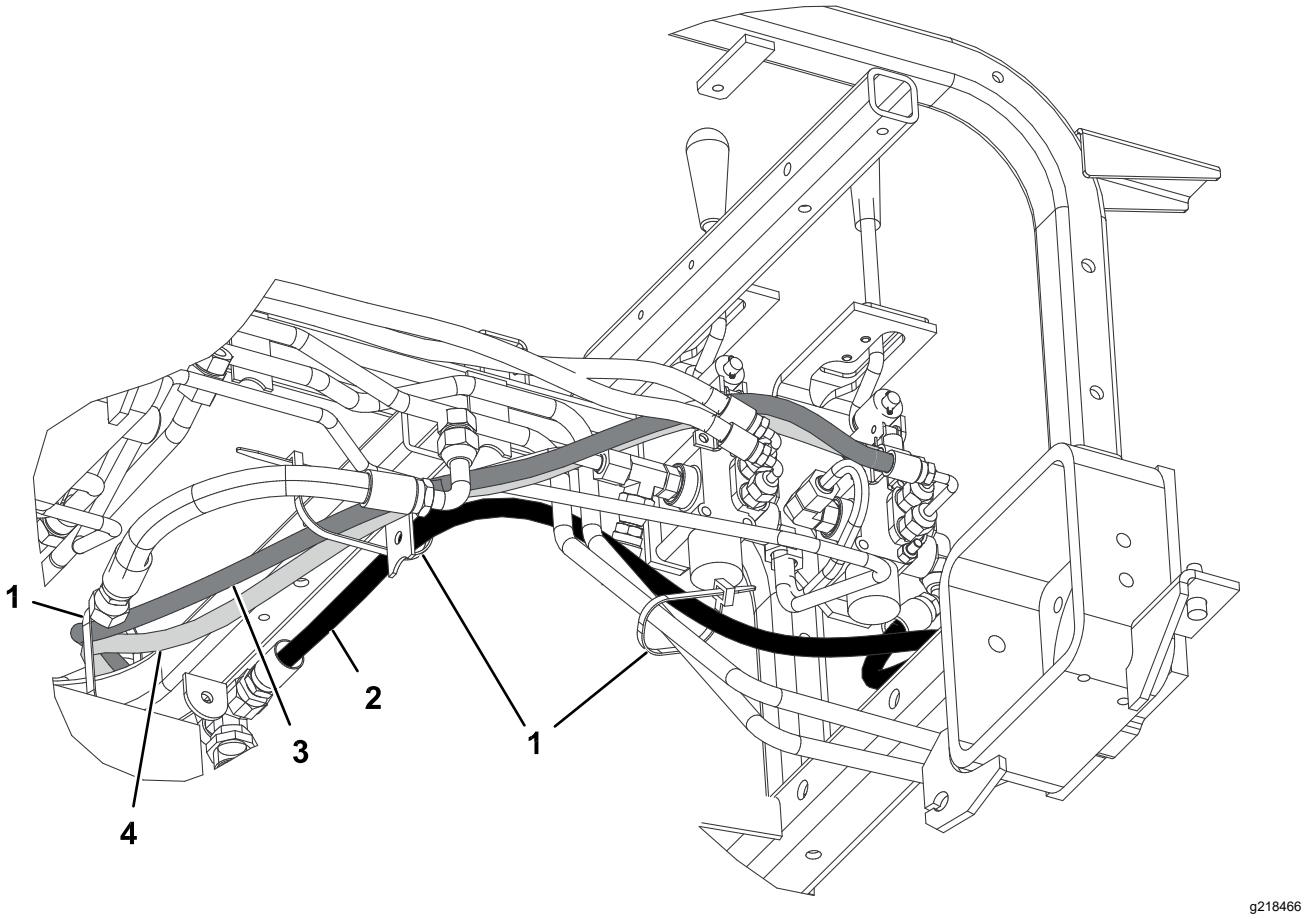

Figure 23
Model 08745

1. Cable tie
2. Hydraulic hose (Part No. 108-8449)
3. Hydraulic hose (Part No. 108-8453)
4. Hydraulic hose (Part No. 108-8454)

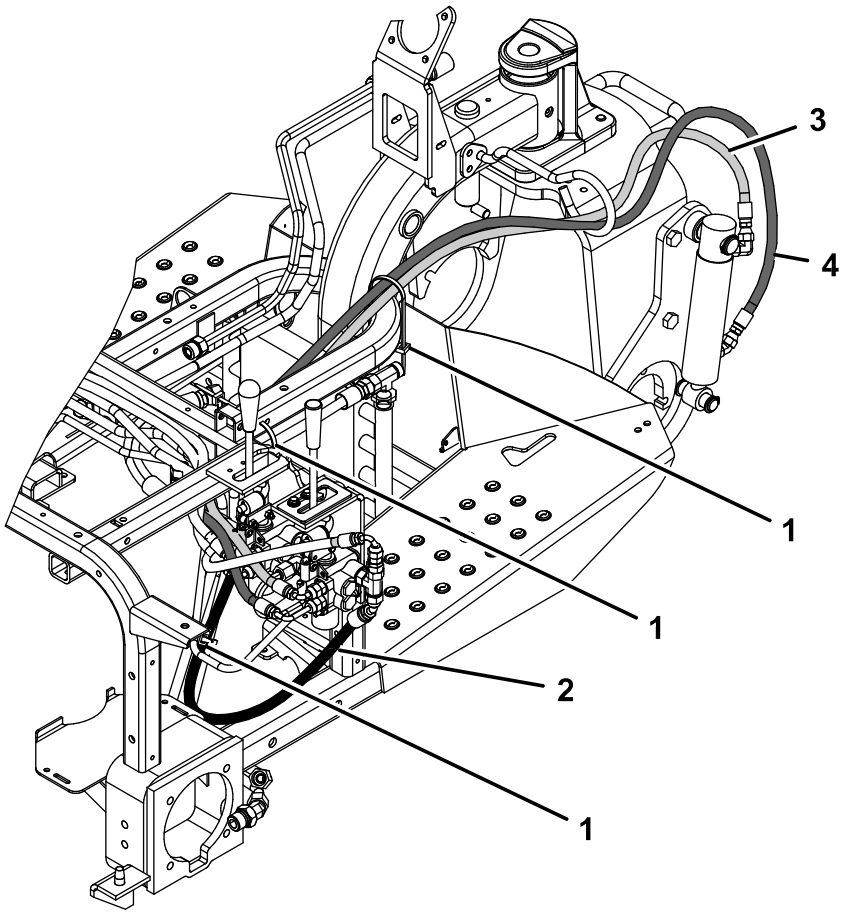

g362591

Figure 24
Model 08745

1. Cable tie
2. Hydraulic hose (Part No. 108-8449)
3. Hydraulic hose (Part No. 108-8453)
4. Hydraulic hose (Part No. 108-8454)

11

Installing the Control Panel and Lever Guide Plate

Parts needed for this procedure:

1	Lever guide plate
2	Flange-head screw
2	Washer
1	Control panel decal
1	Control panel
1	Knob
3	Plastic cable tie

Procedure

1. Insert the lever guide plate over the lift lever and loosely secure it to the frame with 2 flange-head screws and washers (Figure 25).

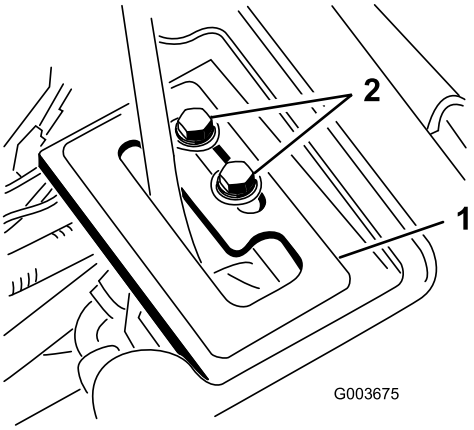

g003675

Figure 25

1. Lever guide plate
2. Flange-head screws

2. Check the hydraulic-fluid level and replenish the fluid as required.

⚠ WARNING

Hydraulic fluid escaping under pressure can penetrate skin and cause injury.

- **If hydraulic fluid is injected into the skin it must be surgically removed within a few hours by a doctor familiar with this type of injury. Gangrene may result if this is not done.**
- **Keep body and hands away from pin hole leaks or nozzles that eject high-pressure hydraulic fluid.**
- **Use cardboard or paper to find hydraulic leaks.**
- **Safely relieve all pressure in the hydraulic system before performing any work on the hydraulic system.**
- **Ensure that all hydraulic-fluid hoses and lines are in good condition and all hydraulic connections and fittings are tight before applying pressure to the hydraulic system.**

3. Start the traction unit engine and check the fitting connections.
4. Install the wheel shroud, the center shroud, and the console.

   Note: Do not install the control panel at this time. Ensure that the shrouds do not interfere with the hoses. Route the hoses as required. Reverse the shroud installation procedure used in step 1.
5. Install the rear tire and remove the blocks from under the rear of the machine.
6. Torque the lugs nuts to 61 to 75 N·m (45 to 55 ft-lb).
7. With the engine running and lift lever in the **Float** position, slide the lever guide plate until the lift cylinder can be extended and retracted by hand (Figure 25).

⚠ WARNING

The engine must be running so that the final adjustment of the lift lever detent plate can be performed. Contact with moving parts or hot surfaces may cause personal injury.

Keep hands, feet, face, and other body parts away from rotating parts, the muffler, and other hot surfaces.

8. Tighten both lift lever guide plate mounting screws to secure the adjustment (Figure 25).
9. Remove the hour meter from the old control panel and install it in the new control panel.
10. Install the new control panel and plug the wire into the hour meter.
11. Secure the control panel in place with the fasteners previously removed (Figure 26).

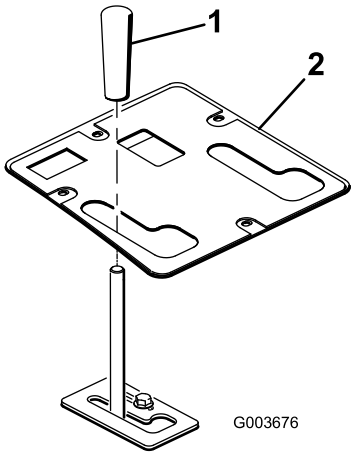

g003676

Figure 26

1. Knob
2. Control panel

12. Install the knob onto the lift lever (Figure 26).
13. Grease the front lift frame; refer to Greasing the Lift Frame (page 20).
14. Check the hydraulic-fluid level and replenish the fluid as required.

12

Reading/Storing the Documentation

Parts needed for this procedure:

1	*Operator's Manual*

Procedure

1. Read the documentation.
2. Store the documentation in a safe place.

Operation

Specifications

Net weight	38.5 kg (85 lb)

Attachments/Accessories

A selection of Toro approved attachments and accessories is available for use with the machine to enhance and expand its capabilities. Contact your Authorized Service Dealer or Distributor or go to www.Toro.com for a list of all approved attachments and accessories.

Operating Tips

- The front lift frame is designed to accept only certain attachments. Do not try to install a rear mount attachment to the front lift frame, as damage to the machine may occur.
- To lower the front lift frame, push the lift lever forward.
- To allow the front lift frame to float, push the lift lever forward and to the side into the detent.
- To raise the front lift frame, pull the lift lever rearward.
- Become familiar with the safe operation of the equipment, with the operator controls, and safety signs.
- Keep hands and feet away from moving parts and hot surfaces.

Maintenance

Note: To obtain an electrical schematic or a hydraulic schematic for your machine, visit www.Toro.com.

Greasing the Lift Frame

The front lift frame has 5 grease fittings (Figure 27) that must be lubricated regularly with No. 2 lithium grease. If the machine is operated under normal conditions, lubricate all bearings and bushings after every 100 hours of operation. Lubricate the bearings and bushings immediately **after every** washing, regardless of the interval listed.

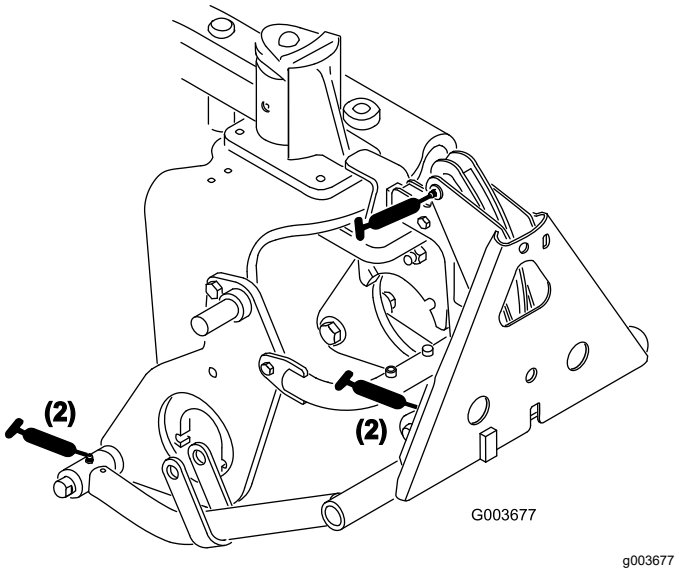

Figure 27

Notes:

Declaration of Incorporation

The Toro Company, 8111 Lyndale Ave. South, Bloomington, MN, USA declares that the following unit(s) conform(s) to the directives listed, when installed in accordance with the accompanying instructions onto certain Toro models as indicated on the relevant Declarations of Conformity.

Model No.	Serial No.	Product Description	Invoice Description	General Description	Directive
08712	311000336 and Up	Front Lift Frame	FRONT LIFT FRAME KIT	Front Lift Frame Assembly	2006/42/EC

Relevant technical documentation has been compiled as required per Part B of Annex VII of 2006/42/EC.

We will undertake to transmit, in response to requests by national authorities, relevant information on this partly completed machinery. The method of transmission shall be electronic transmittal.

This machinery shall not be put into service until incorporated into approved Toro models as indicated on the associated Declaration of Conformity and in accordance with all instructions, whereby it can be declared in conformity with all relevant Directives.

Certified:



Tom Langworthy
Engineering Director
8111 Lyndale Ave. South
Bloomington, MN 55420, USA
September 26, 2024

Authorized Representative:

Marcel Dutrieux
Manager European Product Integrity
Toro Europe NV
Nijverheidsstraat 5
2260 Oevel
Belgium

UK Declaration of Incorporation

The Toro Company, 8111 Lyndale Ave. South, Bloomington, MN, USA declares that the following unit(s) conform(s) to the directives listed, when installed in accordance with the accompanying instructions onto certain Toro models as indicated on the relevant Declarations of Conformity.

Model No.	Serial No.	Product Description	Invoice Description	General Description	Regulation
08712	311000336 and Up	Front Lift Frame	FRONT LIFT FRAME KIT	Front Lift Frame Assembly	S.I. 2008 No. 1597

Relevant technical documentation has been compiled as required per Schedule 10 of S.I. 2008 No. 1597.

We will undertake to transmit, in response to requests by national authorities, relevant information on this partly completed machinery. The method of transmission shall be electronic transmittal.

This machinery shall not be put into service until incorporated into approved Toro models as indicated on the associated Declaration of Conformity and in accordance with all instructions, whereby it can be declared in conformity with all relevant Directives.

This declaration has been issued under the sole responsibility of the manufacturer.
The object of the declaration is in conformity with relevant UK legislation.



Tom Langworthy
Engineering Director
8111 Lyndale Ave. South
Bloomington, MN 55420, USA
September 26, 2024

Authorized Representative:

Marcel Dutrieux
Manager European Product Integrity
Toro U.K. Limited
Spellbrook Lane West
Bishop's Stortford
CM23 4BU
United Kingdom

The Toro Warranty

Two-Year or 1,500 Hours Limited Warranty

Conditions and Products Covered

The Toro Company warrants your Toro Commercial product (“Product”) to be free from defects in materials or workmanship for 2 years or 1,500 operational hours*, whichever occurs first. This warranty is applicable to all products with the exception of Aerators (refer to separate warranty statements for these products). Where a warrantable condition exists, we will repair the Product at no cost to you including diagnostics, labor, parts, and transportation. This warranty begins on the date the Product is delivered to the original retail purchaser.
* Product equipped with an hour meter.

Instructions for Obtaining Warranty Service

You are responsible for notifying the Commercial Products Distributor or Authorized Commercial Products Dealer from whom you purchased the Product as soon as you believe a warrantable condition exists. If you need help locating a Commercial Products Distributor or Authorized Dealer, or if you have questions regarding your warranty rights or responsibilities, you may contact us at:

Toro Commercial Products Service Department
8111 Lyndale Avenue South
Bloomington, MN 55420-1196

952–888–8801 or 800–952–2740
E-mail: commercial.warranty@toro.com

Owner Responsibilities

As the product owner, you are responsible for required maintenance and adjustments stated in your *Operator's Manual*. Repairs for product issues caused by failure to perform required maintenance and adjustments are not covered under this warranty.

Items and Conditions Not Covered

Not all product failures or malfunctions that occur during the warranty period are defects in materials or workmanship. This warranty does not cover the following:

- Product failures which result from the use of non-Toro replacement parts, or from installation and use of add-on, or modified non-Toro branded accessories and products.
- Product failures which result from failure to perform recommended maintenance and/or adjustments.
- Product failures which result from operating the Product in an abusive, negligent, or reckless manner.
- Parts consumed through use that are not defective. Examples of parts which are consumed, or used up, during normal Product operation include, but are not limited to, brake pads and linings, clutch linings, blades, reels, rollers and bearings (sealed or greasable), bed knives, spark plugs, castor wheels and bearings, tires, filters, belts, and certain sprayer components such as diaphragms, nozzles, flow meters, and check valves.
- Failures caused by outside influence, including, but not limited to, weather, storage practices, contamination, use of unapproved fuels, coolants, lubricants, additives, fertilizers, water, or chemicals.
- Failure or performance issues due to the use of fuels (e.g. gasoline, diesel, or biodiesel) that do not conform to their respective industry standards.
- Normal noise, vibration, wear and tear, and deterioration. Normal “wear and tear” includes, but is not limited to, damage to seats due to wear or abrasion, worn painted surfaces, scratched decals or windows.

Parts

Parts scheduled for replacement as required maintenance are warranted for the period of time up to the scheduled replacement time for that part. Parts replaced under this warranty are covered for the duration of the original product warranty and become the property of Toro. Toro will make the final decision whether to repair any existing part or assembly or replace it. Toro may use remanufactured parts for warranty repairs.

Deep Cycle and Lithium-Ion Battery Warranty

Deep cycle and Lithium-Ion batteries have a specified total number of kilowatt-hours they can deliver during their lifetime. Operating, recharging, and maintenance techniques can extend or reduce total battery life. As the batteries in this product are consumed, the amount of useful work between charging intervals will slowly decrease until the battery is completely worn out. Replacement of worn out batteries, due to normal consumption, is the responsibility of the product owner.
Note: (Lithium-Ion battery only): Refer to the battery warranty for additional information.

Lifetime Crankshaft Warranty (ProStripe 02657 Model Only)

The Prostripe which is fitted with a genuine Toro Friction Disc and Crank-Safe Blade Brake Clutch (integrated Blade Brake Clutch (BBC) + Friction Disc assembly) as original equipment and used by the original purchaser in accordance with recommended operating and maintenance procedures, are covered by a Lifetime Warranty against engine crankshaft bending. Machines fitted with friction washers, Blade Brake Clutch (BBC) units and other such devices are not covered by the Lifetime Crankshaft Warranty.

Maintenance is at Owner’s Expense

Engine tune-up, lubrication, cleaning and polishing, replacement of filters, coolant, and completing recommended maintenance are some of the normal services Toro products require that are at the owner’s expense.

General Conditions

Repair by an Authorized Toro Distributor or Dealer is your sole remedy under this warranty.

The Toro Company is not liable for indirect, incidental or consequential damages in connection with the use of the Toro Products covered by this warranty, including any cost or expense of providing substitute equipment or service during reasonable periods of malfunction or non-use pending completion of repairs under this warranty. Except for the Emissions warranty referenced below, if applicable, there is no other express warranty. All implied warranties of merchantability and fitness for use are limited to the duration of this express warranty.

Some states do not allow exclusions of incidental or consequential damages, or limitations on how long an implied warranty lasts, so the above exclusions and limitations may not apply to you. This warranty gives you specific legal rights, and you may also have other rights which vary from state to state.

Note Regarding Emissions Warranty

The Emissions Control System on your Product may be covered by a separate warranty meeting requirements established by the U.S. Environmental Protection Agency (EPA) and/or the California Air Resources Board (CARB). The hour limitations set forth above do not apply to the Emissions Control System Warranty. Refer to the Engine Emission Control Warranty Statement supplied with your product or contained in the engine manufacturer’s documentation.

Countries Other than the United States or Canada

Customers who have purchased Toro products exported from the United States or Canada should contact their Toro Distributor (Dealer) to obtain guarantee policies for your country, province, or state. If for any reason you are dissatisfied with your Distributor's service or have difficulty obtaining guarantee information, contact your Authorized Toro Service Center.