FORM NO. 42889

TORO

MODEL NO. 41502-20101 & UP

PARTS MANUAL

# MULTI-PRO 5200
## VEHICLE

## SAFETY AND INSTRUCTION DECALS

The following decals are installed on the machine. If any become damaged or illegible, replace it. The decal part number is listed below.

**⚠ CAUTION**

1. Keep all shields in place.
2. Disengage and shut off all engine and/or motor power before servicing or unclogging machine.
3. Keep hands, feet and clothing away from power-driven parts.

*#41162 Located on top of engine.*

**⚠ CAUTION**

**HYDRAULIC FLUID ONLY**
Use 10W40 motor oil, which meets API Services SG, SF/CD specifications

*#41848 Located on top of Hydraulic Tank.*

**⚠ WARNING**

AVOID POSSIBLE INJURY OR DEATH FROM A MACHINE RUNAWAY.
- DO NOT START ENGINE BY SHORTING ACROSS STARTER TERMINALS. MACHINE WILL START IN GEAR AND MOVE IF NORMAL STARTING CIRCUITRY IS BYPASSED.
- START ENGINE ONLY FROM OPERATOR'S SEAT WITH TRANSMISSION IN NEUTRAL OR PARK.
- NEVER START ENGINE WHILE STANDING NEXT TO MACHINE.

87-0430

*#87-0430 Located on Dash Panel on right-hand side of Steering Column.*

**⚠ WARNING**

FAILURE TO OBEY THE SAFETY WARNINGS MAY RESULT IN INJURY TO YOU OR OTHERS.

THIS VEHICLE IS OF SUFFICIENT SIZE AND WEIGHT TO CAUSE SERIOUS INJURY IN CASE OF UPSET OR COLLISION.

WHILE OPERATING VEHICLE:
- READ AND UNDERSTAND OPERATOR'S MANUAL LOCATED BEHIND SEAT.
- DO NOT EXCEED PAYLOAD CAPACITY OF VEHICLE AND/OR TORO ACCESSORIES OR PERMIT PASSENGER ANY PLACE ON VEHICLE EXCEPT SEAT.
- USE HAND HOLDS WHERE APPLICABLE.
- PLACE HEAVY LOADS FORWARD OF REAR AXLE. UNBALANCED OR TOP HEAVY LOADS CAN CAUSE UPSET.

WHILE OPERATING VEHICLE:
- REMAIN SEATED AND USE BOTH HANDS FOR STEERING.
- KEEP ARMS AND LEGS WITHIN VEHICLE BODY.
- AVOID SUDDEN STARTS AND STOPS.
- SUDDEN SHARP TURNS CAN CAUSE UPSET.
- REGULATE SPEED TO MEET ROAD AND WEATHER CONDITIONS.
- DO NOT OPERATE IN OR NEAR AN EXPLOSIVE ENVIRONMENT.
- IF A MALFUNCTION OCCURS, CEASE OPERATION. DO NOT OPERATE VEHICLE UNTIL CONDITION IS CORRECTED.

BEFORE LEAVING VEHICLE:
- TURN IGNITION TO "OFF" POSITION, REMOVE KEY.
- APPLY PARKING BRAKE; PARKING BRAKE IS NOT AUTOMATICALLY APPLIED.

87-0580

*#87-0580 Located on right-hand side of Dash Panel.*

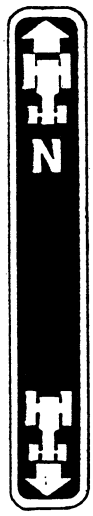


*#41914 Located on Dash Panel next to Vehicle Drive Control Lever.*

**⚠ CAUTION**

**GASOLINE ONLY**

*#41849 Located on top of Gasoline Tank.*



*#41176 Located on Dash Panel next to Key Switch.*




*#41175 Located on front of Seat Support next to Throttle Control.*

(P) PARKING BRAKE
1. DEPRESS BRAKE PEDAL
2. PULL LEVER TO LOCK

87-0530

*#87-0530 Located on Dash Panel next to Brake Lock.*




*#41174 Located next to Directional Control Valve.*

TORO

*#66-1210 Located on Console front.*

READ YOUR OPERATOR'S MANUAL FOR OPERATING AND SAFETY INSTRUCTIONS. TO GET A REPLACEMENT MANUAL, SEND MODEL AND SERIAL NUMBERS TO: THE TORO CO., 8111 LYNDALE AVE. S., MPLS., MN 55420

65-3090

*#65-3090 Located on left-hand side of Dash Panel.*

**⚠ CAUTION**
**ROTATING MEMBER**

*#76-8750 Located on left-hand Radiator Brace.*

MULTI PRO 5200

*#87-0620 Located on Console front.*

©The Toro Company-1992

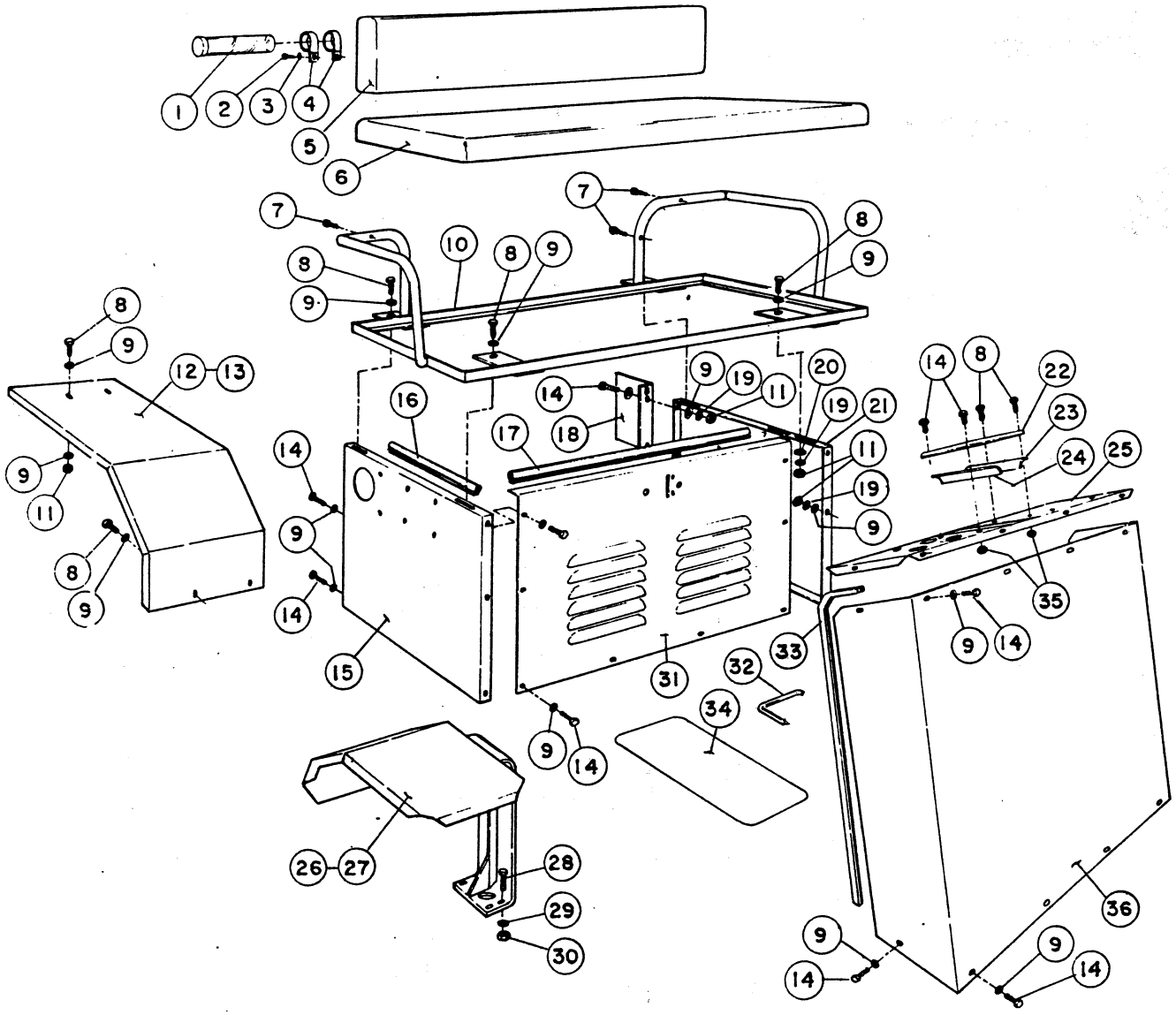

## SEAT, SHROUDS, CONSOLE

# SEAT, SHROUDS, CONSOLE

| REF | PART NO. | DESCRIPTION | QTY |
|---|---|---|---|
| 1 | 42559 | Instruction Manual Tube | 1 |
| 2 | 42614 | Wood Screw, #10 x 3/4 | 2 |
| 3 | 24-7-BD | Flat Washer, #10 S.A.E. | 2 |
| 4 | 42560 | Tube Mounting Bracket | 2 |
| 5 | 41813 | Seat Back | 1 |
| 6 | 41812 | Seat Bottom | 1 |
| 7 | 41898 | Wood Screw, #10 x 3/4 | 4 |
| 8 | 20-26-AGD | HHCS, 5/16 NC x 1" (Grade 5) | 14 |
| 9 | 24-10-BD | Flat Washer, 5/16 S.A.E. | 42 |
| 10 | 42009 | Seat Frame Assy | 1 |
| 11 | 22-12-AJD | Hex Nut, 5/16 NC | 24 |
| 12 | 42679 | Rear Fender - R.H. | 1 |
| 13 | 42680 | Rear Fender - L.H. | 1 |
| 14 | 20-24-AGD | HHCS, 5/16 NC x 3/4 (Grade 5) | 26 |
| 15 | 42659 | Side Panel - R.H. | 1 |
| 16 | 42658 | Side Panel Trim | 1 |
| 17 | 42657 | Front Panel Trim | 1 |
| 18 | 41998 | Direction Valve Bracket | 1 |
| 19 | 23-10-GD | Lock Washer, 5/16 | 20 |
| 20 | 356308 | Special Washer, 1 1/8 O.D. | 4 |
| 21 | 42660 | Side Panel - L.H. | 1 |
| 22 | 42651 | Direction Selector Plate | 1 |
| 23 | 42604 | Rubber Strip - R.H. | 1 |
| 24 | 41900 | Rubber Strip - L.H. | 1 |
| 25 | 42649 | Dash Panel Assembly | 1 |
| 26 | 42669 | Front Fender Assy - R.H. | 1 |
| 27 | 42674 | Front Fender Assy - L.H. | 1 |
| 28 | 20-47-AGD | HHCS, 3/8 NC x 1" | 8 |
| 29 | 23-11-GD | Lock Washer, 3/8 | 8 |
| 30 | 22-13-AJD | Hex Nut, 3/8 NC | 8 |
| 31 | 42655 | Front Seat Panel | 1 |
| 32 | 41997 | Floor Plate Trim | 1 |
| 33 | 42001 | Console Trim | 1 |
| 34 | 41132 | Safety Track | 2 |
| 35 | 22-12-AJFD | Lock Nut, 5/16 NC | 4 |
| 36 | 41999 | Front Console Wrapper | 1 |

# FUEL TANK & EXHAUST SYSTEM

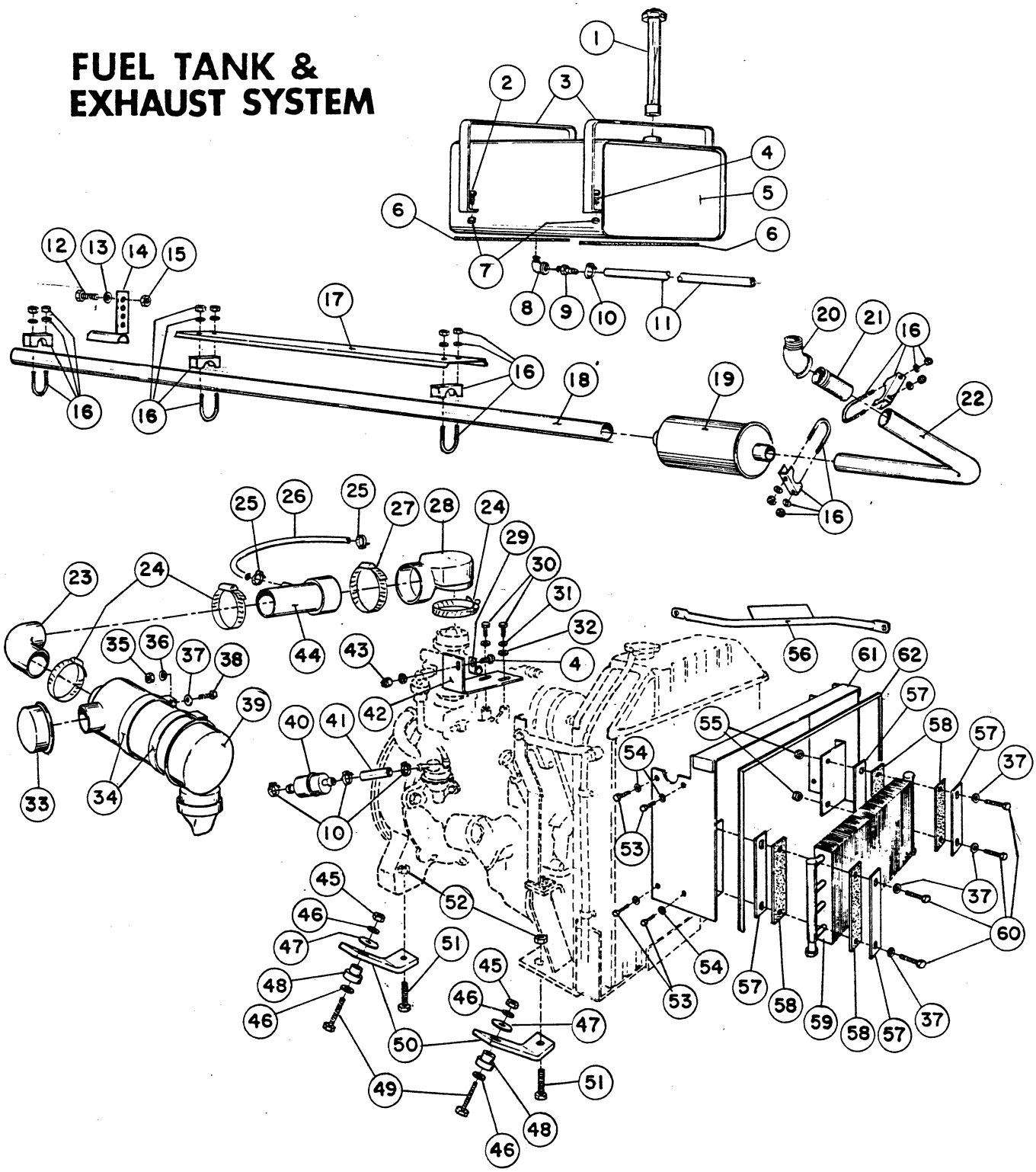

# FUEL TANK & EXHAUST SYSTEM

| REF | PART NO. | DESCRIPTION | QTY |
|---|---|---|---|
| 1 | 41117 | Fuel Cap & Guage | 1 |
| 2 | 20-6-AD | HHCS, 1/4 NC x 1 1/4 | 2 |
| 3 | 41994 | Tank Strap | 2 |
| 4 | 20-3-AD | HHCS, 1/4 NC x 3/4 | 3 |
| 5 | 41769 | Gasoline Tank | 1 |
| 6 | 41995 | Armaflex Strip | 2 |
| 7 | 22-11-AJFD | Lock Nut, 1/4 NC | 4 |
| 8 | 9900 | 90 St. Elbow, 1/8 Black Iron | 1 |
| 9 | 26291 | Hose Barb, 1/8 MPT x 1/4 Barb | 1 |
| 10 | 97406 | Hose Clamp | 4 |
| 11 | 42652 | Fuel Line Hose | 1 |
| 12 | 20-47-AGD | HHCS, 3/8 NC x 1" (Grade 5) | 1 |
| 13 | 24-11-AD | Flat Washer, 3/8 | 1 |
| 14 | 41912 | Tailpipe Hanger | 1 |
| 15 | 22-13-AJFD | Lock Nut, 3/8 NC | 1 |
| 16 | 94485 | Muffler Clamp | 6 |
| 17 | 42040 | Tailpipe Shield | 1 |
| 18 | 42624 | Tailpipe | 1 |
| 19 | 42622 | Muffler | 1 |
| 20 | 9990 | 45 St. Elbow, 1 1/4 Black Iron | 1 |
| 21 | 9994 | Nipple, 1 1/4 x 3" | 1 |
| 22 | 42623 | Exhaust Pipe | 1 |
| 23 | 41908 | Exhaust Hose | 1 |
| 24 | 26392 | Hose Clamp | 3 |
| 25 | 96609 | Hose Clamp | 2 |
| 26 | 42662 | Oil Breather Hose, 5/8 I.D. x 14" | 1 |
| 27 | 26393 | Hose Clamp | 1 |
| 28 | 42621 | Reducer Elbow - Carb. Inlet. | 1 |
| 29 | 42606 | Cable Clip | 1 |
| 30 | 42605 | Metric Screw, 6 M - 1 x 16 | 2 |
| 31 | 23-9-GD | Lock Washer, 1/4 | 2 |
| 32 | 24-9-BD | Flat Washer, 1/4 S.A.E. | 2 |
| 33 | 41909 | Air Inlet Hood | 1 |
| 34 | 41906 | Air Cleaner Mtg. Band | 2 |
| 35 | 22-12-AJD | Hex Nut, 5/16 NC | 4 |
| 36 | 23-10-GD | Lock Washer, 5/16 | 4 |
| 37 | 24-10-BD | Flat Washer, 5/16 S.A.E. | 8 |
| 38 | 20-24-AGD | HHCS, 5/16 NC x 3/4 (Grade 5) | 4 |
| 39 | 41904 | Air Cleaner | 1 |
|  | 41905 | Air Cleaner Filter Element | 1 |
| 40 | 41770 | Gasoline Filter | 1 |
| 41 | 42020 | Fuel Line Hose | 1 |
| 42 | 42653 | Throttle Cable Bracket | 1 |
| 43 | 22-11-AJD | Hex Nut, 1/4 NC | 1 |
| 44 | 42661 | Aircleaner Tube Assy | 1 |
| 45 | 22-15-BJFD | Lock Nut, 1/2 NF | 4 |
| 46 | 24-13-AD | Flat Washer | 4 |
| 47 | 41985 | Special Washer | 4 |
| 48 | 41782 | Motor Mount | 4 |
| 49 | 20-91-BGD | HHCS, 1/2 NF x 2 1/2" (Grade 5) | 4 |
| 50 | 42643 | Engine Mounting Bracket | 4 |
| 51 | 20-122-AGD | HHCS, 5/8 NC x 1 3/4 (Grade 5) | 4 |
| 52 | 22-17-AJFD | Lock Nut, 5/8 NC | 4 |
| 53 | 34-76-AMTD | Self-Tapping Screw, #8 NC x 5/8 | 8 |
| 54 | 23-7-GD | Lock Washer, 3/16 | 8 |
| 55 | 22-12-AJFD | Lock Nut, 5/16 | 4 |
| 56 | 42959 | Decal Plate Assy | 1 |
| 57 | 42070 | Backing Strip | 4 |
| 58 | 42071 | Armaflex Strip | 4 |
| 59 | 42773 | Oil Cooler | 1 |
| 60 | 20-28-AGD | HHCS, 5/16 NC x 1 1/2 (Grade 5) | 4 |
| 61 | 42639 | Shroud & Cooler Bracket | 1 |
| 62 | 42656 | Shroud Trim | 1 |

# REAR AXLE & BRAKES

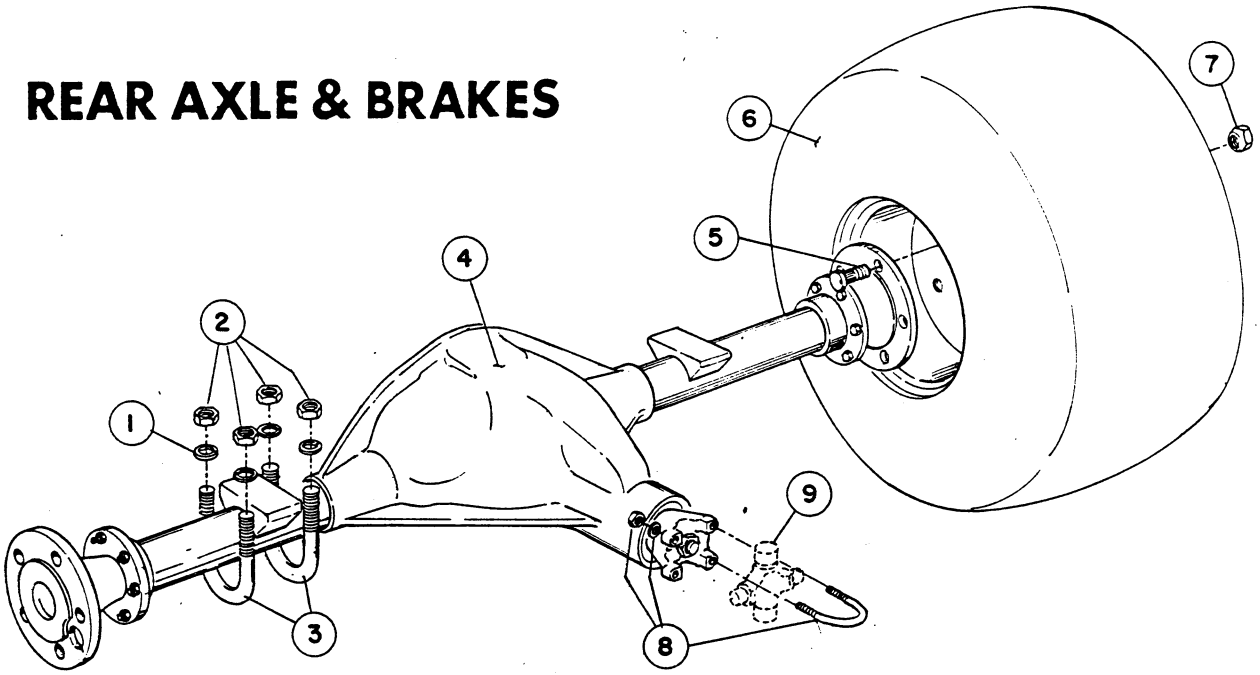


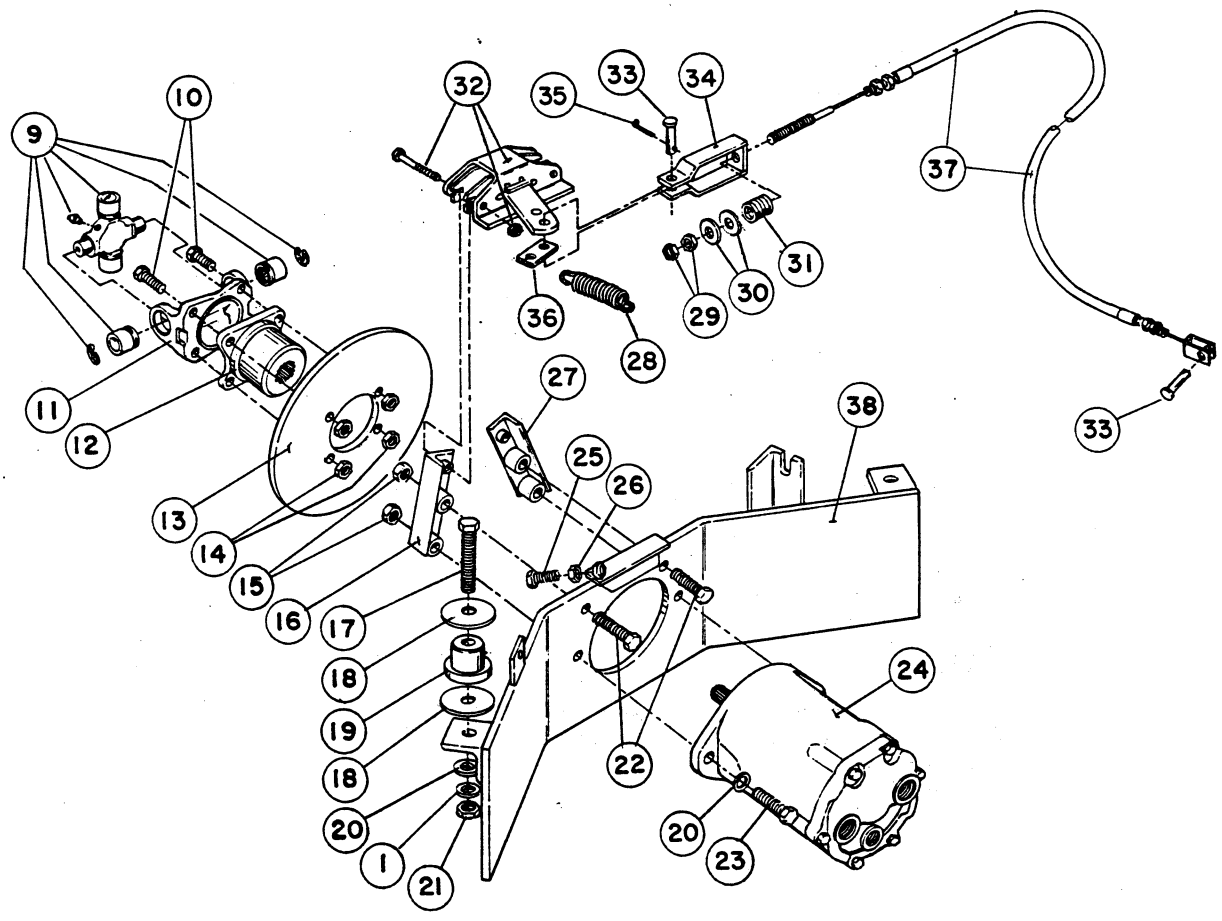

# REAR AXLE & BRAKES

| REF | PART NO. | DESCRIPTION | QTY |
|---|---|---|---|
| 1 | 23-13-GD | Lock Washer, 1/2 | 10 |
| 2 | 22-15-BJD | Hex Nut, 1/2 NF | 8 |
| 3 | 41783 | U-Bolt | 4 |
| 4 | 41977 | Rear Axle Welded Assy | 1 |
| 5 | 41772 | Bolt-Hub Stud | 10 |
| 6 | 41765 | Tire & Wheel Assy: | 2 |
| | 41767 | Tire (f/w 41765) | 2 |
| | 41766 | Wheel Rim (f/w 41765) | 2 |
| 7 | 7436 | Wheel Nut, 1/2 NF x 60 | 10 |
| 8 | 40220 | U-Bolt Assy | 2 |
| 9 | 41773 | Journal & Bearing | 1 |
| 10 | 20-48-BGD | HHCS, 3/8 NF x 1 1/4" | 4 |
| 11 | 41584 | Flange Yoke | 1 |
| 12 | 41583 | Companion Flange | 1 |
| 13 | 41775 | Brake Disc | 1 |
| 14 | 22-13-BJFD | Lock Nut, 3/8 NF | 4 |
| 15 | 22-15-AJFD | Lock Nut, 1/2 NC | 4 |
| 16 | 41986 | Brake Brkt. Assy (R.H.) | 1 |
| 17 | 20-95-AGD | HHCS, 1/2 NC x 3 1/2" | 2 |
| 18 | 41985 | Special Washer | 4 |
| 19 | 41782 | Rubber Motor Mount | 2 |
| 20 | 24-13-AD | Flat Washer, 1/2 | 6 |
| 21 | 22-15-AJD | Hex Nut, 1/2 NC | 2 |
| 22 | 20-89-AGD | HHCS, 1/2 NC x 2" | 2 |
| 23 | 20-92-AGD | HHCS, 1/2 NC x 2 3/4" | 2 |
| 24 | 41758 | Piston Motor | 1 |
| | 42595 | Motor Shaft Seal | 1 |
| 25 | 20-49-AGD | HHCS, 3/8 NC x 1 1/2 | 1 |
| 26 | 22-13-AJD | Hex Nut, 3/8 NC | 1 |
| 27 | 41989 | Brake Brkt. Assy. (L.H.) | 1 |
| 28 | 41721 | Extension Spring | 1 |
| 29 | 22-12-BJD | Hex Nut, 5/16 NF | 2 |
| 30 | 356308 | Special Washer | 2 |
| 31 | 41847 | Compression Spring | 1 |
| 32 | 31506 | Brake Assy - Caliper | 1 |
| | 31689 | Brake Pad | 2 |
| 33 | 40258 | Clevis Pin, 5/16 | 2 |
| 34 | 41991 | Brake Clevis Assy | 1 |
| 35 | 28-18-D | Cotter Pin, 1/8 x 1" | 1 |
| 36 | 42726 | Spring Link | 1 |
| 37 | 41845 | Brake Cable Assy | 1 |
| 38 | 41979 | Motor Mounting Assy | 1 |

# FRONT AXLE

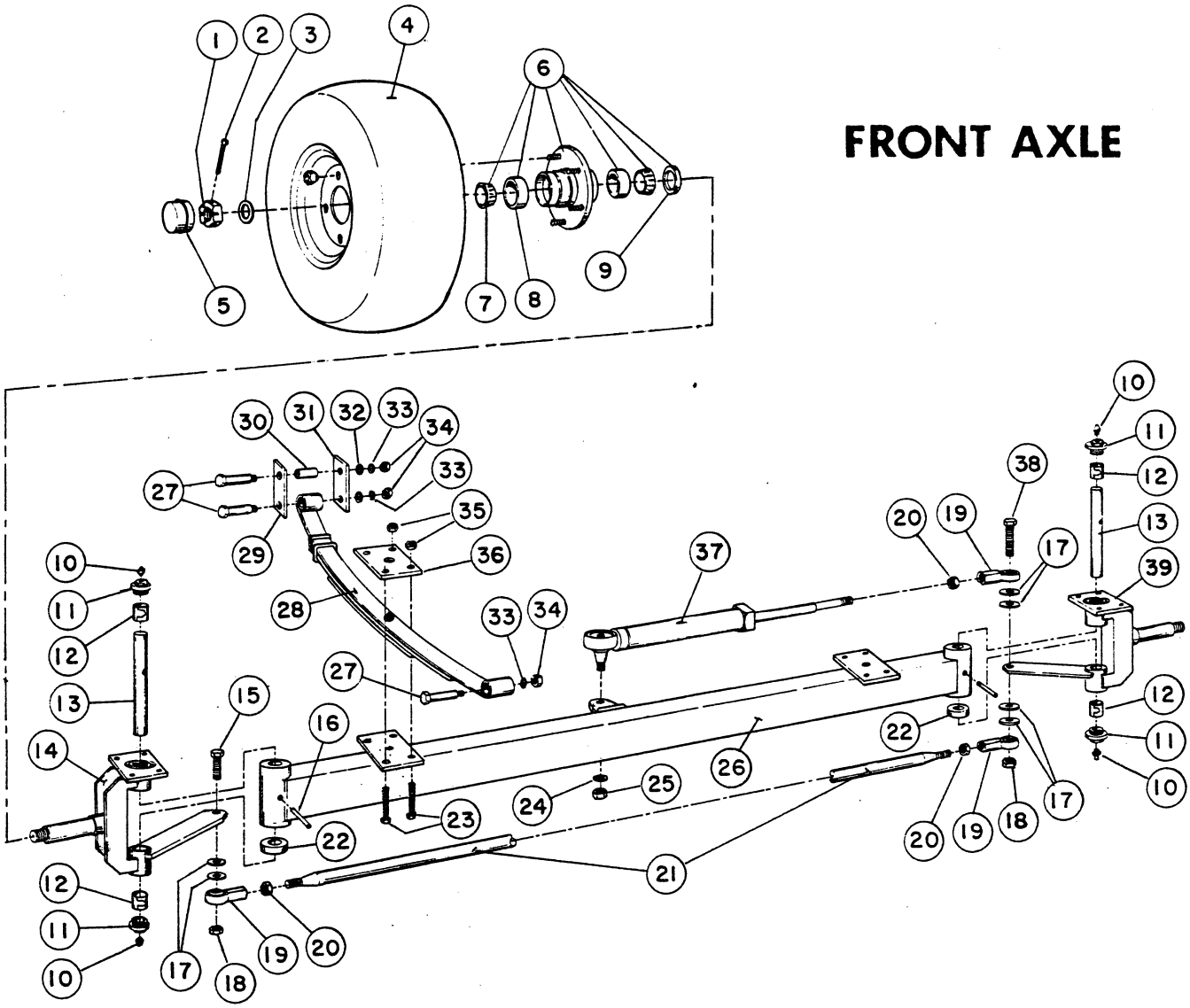
1
2
3
4
5
6
7
8
9
10
11
12
13
14
15
16
17
18
19
20
21
22
23
24
25
26
27
28
29
30
31
32
33
34
35
36
37
38
39

# FRONT AXLE

| REF | PART NO. | DESCRIPTION | QTY |
|---|---|---|---|
| 1 | 22-18-BJLD | Hex Slotted Nut, 3/4 NF | 2 |
| 2 | 28-20-C | Cotter Pin, 1/8 x 1 1/2" | 2 |
| 3 | 358042 | Flat Washer | 2 |
| 4 | 42329 | Tire & Wheel Assy | 2 |
| | 42330 | Tire (f/w 42329) | 1 |
| | 41169 | Wheel Rim (f/w 42329) | 1 |
| 5 | 40438 | Dust Cap (f/w 40085) | 1 |
| 6 | 40085 | Hub Assy | 2 |
| 7 | 40440 | Cone (f/w 40085) | 2 |
| 8 | 40439 | Cup (f/w 40085) | 2 |
| 9 | 41321 | Seal (f/w 40085) | 1 |
| 10 | 361011 | Grease Fitting | 4 |
| 11 | 539048 | Special Plug | 4 |
| 12 | 728062 | King Pin Bearing | 4 |
| 13 | 40081 | King Pin | 2 |
| 14 | 41924 | Yoke Assy. (R.H.) | 1 |
| 15 | 20-88-BGD | HHCS, 1/2 NF x 1 3/4 | 1 |
| 16 | 29-199-C | Spring Pin, 1/4 x 2" | 2 |
| 17 | 24-13-AD | Flat Washer | 6 |
| 18 | 22-15-BJFD | Lock Nut, 1/2 NF | 2 |
| 19 | 522087 | Rod End | 3 |
| 20 | 22-15-BJKD | Jam Nut, 1/2 NF | 3 |
| 21 | 41781 | Steering Tube | 1 |
| 22 | 307358 | Thrust Bearing | 2 |
| 23 | 20-51-AGD | HHCS, 3/8 NC x 2 (Grade 5) | 8 |
| 24 | 23-13-GD | Lock Washer, 1/2 | 1 |
| 25 | 22-15-BJD | Hex Nut, 1/2 NF | 1 |
| 26 | 42561 | Front Axle Assembly | 1 |
| 27 | 42599 | Shoulder Bolt | 6 |
| 28 | 42588 | Spring - Leaf | 2 |
| | 42589 | Spring Bushing (f/w 42588) | AR |
| 29 | 42576 | Shackle - Inside | 2 |
| 30 | 42592 | Bushing - Shackle | 2 |
| 31 | 42574 | Shackle - Outside | 2 |
| 32 | 24-14-AD | Flat Washer, 9/16 | 8 |
| 33 | 23-12-GD | Lock Washer, 7/16 | 6 |
| 34 | 22-14-AJD | Hex Nut, 7/16 NC | 6 |
| 35 | 22-13-AJFD | Lock Nut, 3/8 NC | 8 |
| 36 | 42575 | Plate - Spring | 2 |
| 37 | 27328 | Cylinder | 1 |
| | 28597 | Seal and Wiper Kit | AR |
| 38 | 20-91-BGD | HHCS, 1/2 NF x 2 1/2" (Grade 5) | 1 |
| 39 | 41926 | Yoke Assy (L.H.) | 1 |

# DRIVE LINKAGE

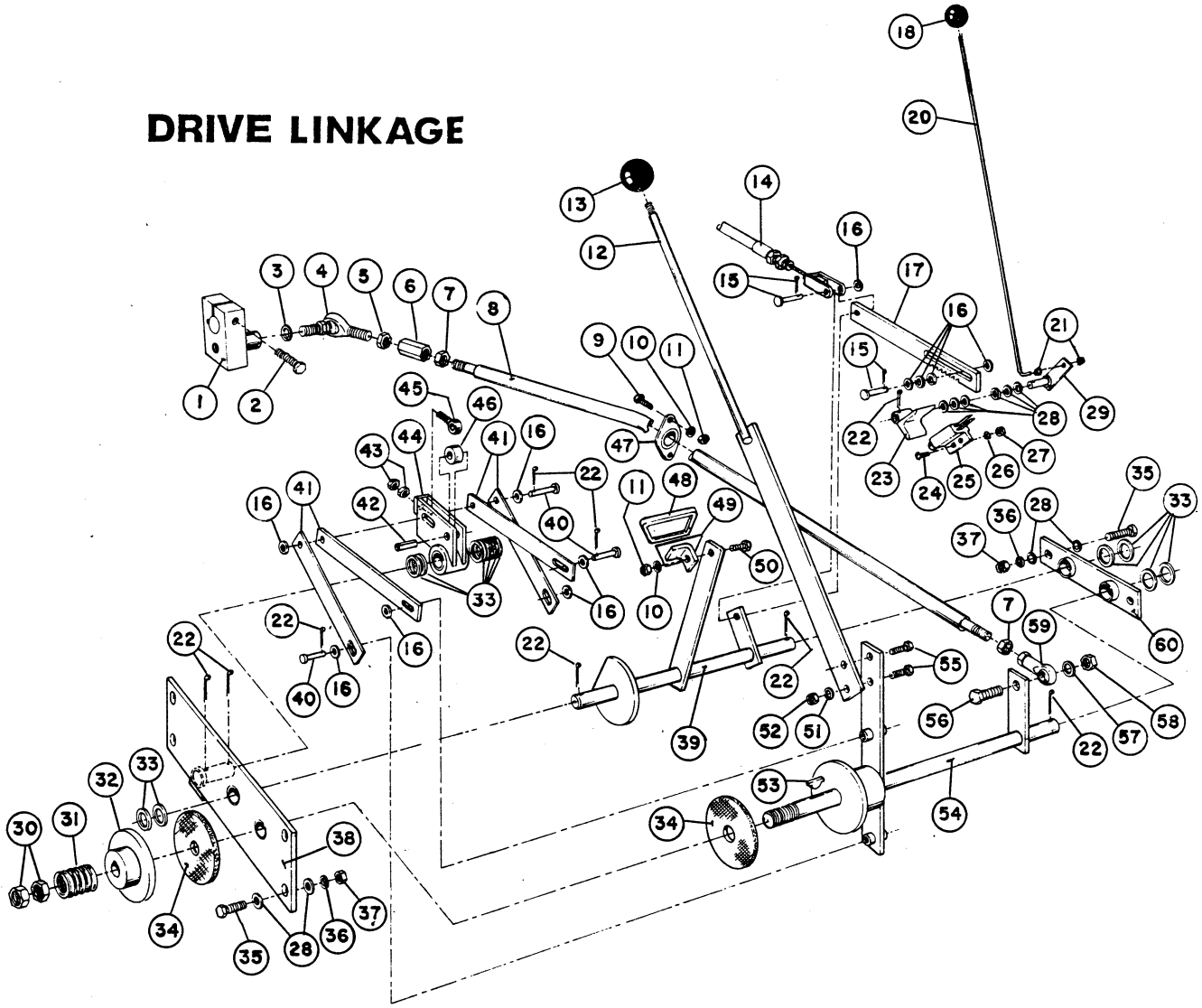

# DRIVE LINKAGE

| REF | PART NO. | DESCRIPTION | QTY |
|---|---|---|---|
| 1 | 42644 | Trunnion Block Assy | 1 |
| 2 | 20-50-BGD | HHCS, 3/8 NF x 1 3/4" | 1 |
| 3 | 23-13-GD | Lock Washer, 1/2 | 1 |
| 4 | 41816 | Rod End, L.H. | 1 |
| 5 | 41974 | Special Nut, 1/2 NF (L.H.) | 1 |
| 6 | 41975 | Coupling Nut, 1/2 NF (LH & RH) | 1 |
| 7 | 22-15-BJKD | Hex Jam Nut, 1/2 NF | 2 |
| 8 | 42647 | Directional Rod Assy | 1 |
| 9 | 20-24-AGD | HHCS, 5/16 NC x 3/4 | 2 |
| 10 | 23-10-GD | Lock Washer, 5/16 | 3 |
| 11 | 22-12-AJD | Hex Nut, 5/16 NC | 3 |
| 12 | 41965 | Directional Lever Assy | 1 |
| 13 | 41112 | Knob | 1 |
| 14 | 41845 | Brake Cable Assy. | 1 |
| 15 | 40258 | Clevis Pin & Cotter | 2 |
| 16 | 24-10-BD | FLat Washer, 5/16 S.A.E. | 11 |
| 17 | 41958 | Brake Lock - Notched | 1 |
| 18 | 42841 | Brake Lock Knob | 1 |
| 19 | 27019 | Grommet | 1 |
| 20 | 42858 | Release Rod | 1 |
| 21 | 41723 | Ring - Push On | 2 |
| 22 | 28-18-D | Cotter Pin, 1/8 x 1" | 9 |
| 23 | 41959 | Locking Assy. | 1 |
| 24 | 34-99-AMVD | Hex Washer Hd Self-Tap Screw, #10 x 3/4" | 2 |
| 25 | 41103 | Interlock Switch | 1 |
| 26 | 23-7-GD | Lock Washer | 2 |
| 27 | 22-9-AJD | Hex Nut, #10 NC | 2 |
| 28 | 24-11-BD | Flat Washer, 3/8 S.A.E. | 24 |
| 29 | 42834 | Clevis Pin Assy | 1 |
| 30 | 22-18-BJKD | Hex Jam Nut, 3/4 NF | 2 |
| 31 | 41786 | Compression Spring | 1 |
| 32 | 41942 | Disc & Hub Assy. | 1 |
| 33 | 358042 | Flat Washer, 1 1/8 x 3/4 I.D. | 15 |
| 34 | 41945 | Friction Disc Pad | 2 |
| 35 | 20-48-AD | HHCS, 3/8 NC x 1 1/4" | 6 |
| 36 | 23-11-GD | Lock Washer, 3/8 | 6 |
| 37 | 22-13-AJD | Hex Nut, 3/8 NC | 6 |
| 38 | 42635 | Mounting Plate Assy | 1 |
| 39 | 42638 | Brake Shaft Assy | 1 |
| 40 | 41851 | Clevis Pin, 5/16 x 1 3/4 | 3 |
| 41 | 41955 | Neutral Linkage Arm | 4 |
| 42 | 41850 | Spring Pin, 3/8 x 1" | 1 |
| 43 | 22-12-BJD | Hex Nut, 5/16 NF | 2 |
| 44 | 41952 | Cam Follower | 1 |
| 45 | 41815 | Rod End | 1 |
| 46 | 41814 | Bearing - Neutral Center | 1 |
| 47 | 41811 | Flanged Bearing | 1 |
| 48 | 42719 | Brake Pedal Pad | 1 |
| 49 | 42716 | Pedal Mtg. Brkt. | 1 |
| 50 | 20-26-AGD | HHCS, 5/16 NC x 1" | 1 |
| 51 | 23-12-GD | Lock Washer, 7/16 | 2 |
| 52 | 22-14-AJD | Hex Nut, 7/16 NC | 2 |
| 53 | 27-16-FC | Woodruff Key | 1 |
| 54 | 42637 | Direction Shaft Assy. | 1 |
| 55 | 20-67-AGD | HHCS, 7/16 NC x 1 1/4" | 2 |
| 56 | 20-87-AGD | HHCS, 1/2 NC x 1 1/2" | 1 |
| 57 | 24-13-BD | Flat Washer, 1/2 S.A.E. | 1 |
| 58 | 22-15-AJFD | Lock Nut, 1/2 NC | 1 |
| 59 | 522087 | Rod End | 1 |
| 60 | 41956 | Support Plate Assy. | 1 |
|  | 41347 | Bearing (f/w Support Plate Assy) | 2 |

# HYDRAULICS

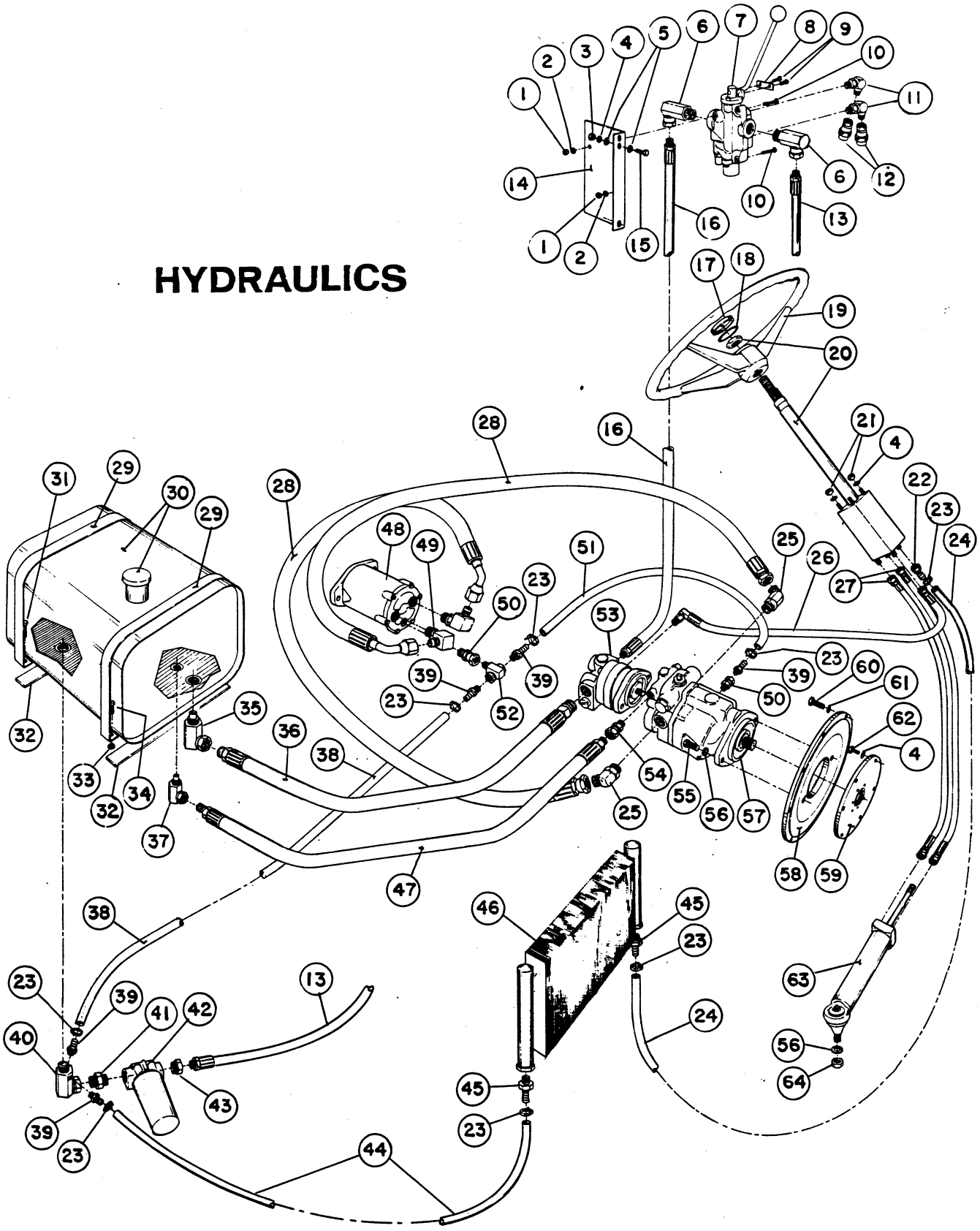

# HYDRAULICS

| REF | PART NO. | DESCRIPTION | QTY |
|---|---|---|---|
| 1 | 22-11-AJD | Hex Nut, 1/4 NC | 3 |
| 2 | 23-9-GD | Lock Washer, 1/4 | 3 |
| 3 | 22-12-AJD | Hex Nut, 5/16 NC | 2 |
| 4 | 23-10-GD | Lock Washer, 5/16 | 8 |
| 5 | 24-10-BD | Flat Washer, 5/16 S.A.E. | 4 |
| 6 | 41834 | 90 Swivel Elbow Adaptor, 3/4 MPT x 3/4 FPT | 2 |
| 7 | 41760 | Directional Valve Assembly | 1 |
| | 42700 | Detente Assembly | AR |
| | 42822 | Quad Ring | 2 |
| | 42823 | Valve Handle | 1 |
| 8 | 42780 | Down Stop | 1 |
| 9 | 34-99-AMVD | Hex Hd Self-Tapping Screw, #10 x 3/4 | 2 |
| 10 | 20-8-AD | HHCS, 1/4 NC x 1 3/4" | 3 |
| 11 | 41835 | 90 Swivel Elbow, 1/2 MPT | 2 |
| 12 | 41789 | Quik Coupling-Female | 2 |
| 13 | 42062 | Hose (5/8 I.D. x 64") Assy., 3/4 MP | 1 |
| 14 | 41998 | Valve Mounting Bracket | 1 |
| 15 | 20-24-AGD | HHCS, 5/16 NC x 3/4" | 2 |
| 16 | 41833 | Hose (5/8 I.D. x 37") Assy., 3/4 MPT & 7/8 MPT | 1 |
| 17 | 41126 | Steering Wheel Cap | 1 |
| 18 | 41127 | "O" - Ring | 1 |
| 19 | 41125 | Steering Wheel | 1 |
| 20 | 41756 | Steering Gear & Column | 1 |
| 21 | 22-12-BJD | Hex Nut, 5/16 NF | 4 |
| 22 | 41830 | Swivel Barb, 9/16 FMT x 3/8" Barb | 1 |
| 23 | 96609 | Hose Clamp | 8 |
| 24 | 42497 | Hose, 3/8 I.D. x 43" (Steering to Cooler) | 1 |
| 25 | 41820 | 45 Fitting Adaptor, 1 1/16 MPT | 2 |
| 26 | 41832 | Hose (3/8 I.D. x 104") Assy., 9/16 FPT x 3/4 MPT | 1 |
| 27 | 41831 | Hose (1/4 I.D. x 57") Assy., 9/16 FPT x 1/2 FPT | 2 |
| 28 | 41821 | Hose (1" I.D. x 76") Assy, 1 1/16 FPT x 1 5/16 FPT | 2 |
| 29 | 41994 | Tank Strap | 2 |
| 30 | 41768 | Hydraulic Reservoir | 1 |
| | 41778 | Cap (f/w 41768) | 1 |
| | 41779 | Hydraulic Strainer (f/w 41768) | 1 |
| 31 | 20-6-AD | HHCS, 1/4 NC x 1 1/4" | 2 |
| 32 | 41995 | Armaflex Strip | 2 |
| 33 | 22-11-AJFD | Lock Nut, 1/4 NC | 4 |
| 34 | 20-3-AD | HHCS, 1/4 NC x 3/4 | 2 |
| 35 | 42190 | 90 Swivel Elbow Assy., 1" MPT x 1" FPT | 1 |
| 36 | 42864 | Suction Hose, 1" I.D. x 15" (Reservoir to Pump) | 1 |
| 37 | 42191 | 90 Swivel Elbow Assy., 1/2 MPT x 1/2 FPT | 1 |
| 38 | 42498 | Hose, 3/8 I.D. x 31" (Motor to Reservoir) | 1 |
| 39 | 6292 | Hose Barb, 1/4 MPT x 3/8 Barb | 5 |
| 40 | 42654 | Adaptor-Modified | 1 |
| 41 | 41828 | Close Nipple, 1" MPT | 1 |
| 42 | 41762 | Hydraulic Filter | 1 |
| | 41763 | Filter Element (f/w 41762) | 1 |
| 43 | 10215 | Reducer Bushing, 1" MPT x 3/4 FPT | 1 |
| 44 | 41829 | Hose, 3/8 I.D. x 66" (Cooler) | 1 |
| 45 | 42774 | Hose Barb, 1/2 NPT x 3/8 Barb | 2 |
| 46 | 42773 | Oil Cooler | 1 |
| 47 | 42865 | Suction Hose, 3/4 I.D. x 18" (Pump to Reservoir) | 1 |
| 48 | 41758 | Piston Motor | 1 |
| | 42595 | Motor Shaft Seal | 1 |
| 49 | 31837 | 90 Elbow Adaptor, 1 1/16 MPT x 1 5/16 MPT | 2 |
| 50 | 41822 | Swivel Adaptor, 9/16 MPT x 1/4 FPT | 2 |
| 51 | 41823 | Hose, 3/8 I.D. x 24" (Motor to Pump) | 1 |
| 52 | 41824 | Swivel Tee Adaptor, 1/4 FPT x 1/4 MPT | 1 |
| 53 | 41785 | Gear Pump w/ Flow Divider | 1 |
| 54 | 41840 | Swivel Adaptor, 3/4 MPT x 1/2 FPT | 1 |
| 55 | 20-86-AGD | HHCS, 1/2 NC x 1 1/4 (Grade 5) | 2 |
| 56 | 23-13-GD | Lock Washer, 1/2 | 2 |
| 57 | 42598 | Piston Pump | 1 |
| | 42587 | Seal - Pump Shaft | AR |
| 58 | 42602 | Plate - Pump/Motor Mount | 1 |
| 59 | 42839 | Coupling - Pump/Motor | 1 |
| 60 | 20-49-AGD | HHCS, 3/8 NC x 1 1/2" (Grade 5) | 8 |
| 61 | 23-11-GD | Lock Washer, 3/8 | 8 |
| 62 | 42860 | Metric Screw, M8-1.25 x 25 | 6 |
| 63 | 27328 | Hydraulic Cylinder | 1 |
| | 28597 | Seal and Wiper Kit | 1 |
| 64 | 22-15-BJD | Hex Nut, 1/2 NF | 1 |

# CONTROLS GAUGES & ELECTRICAL

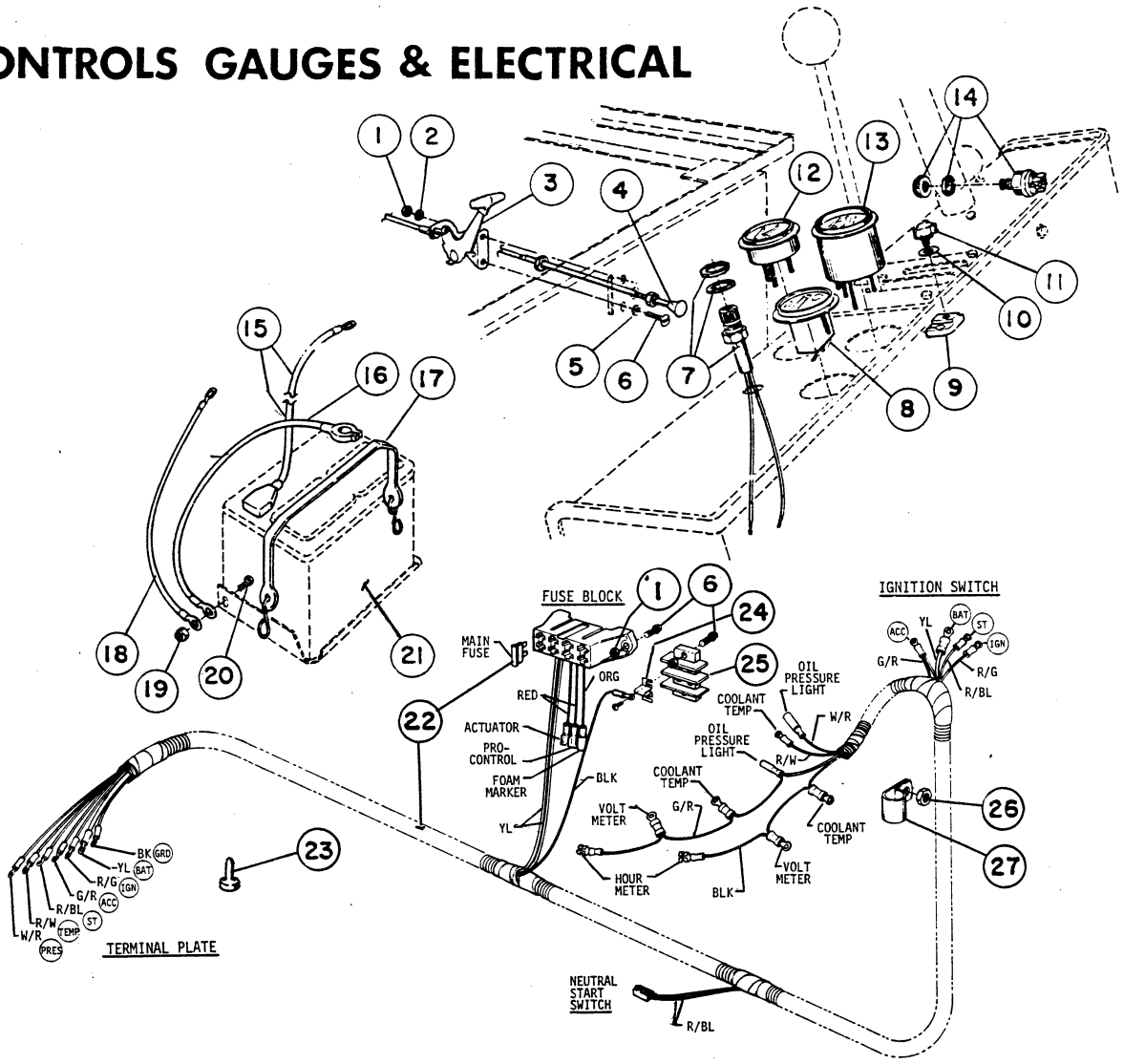


| REF | PART NO. | DESCRIPTION | QTY |
|---|---|---|---|
| 1 | 22-9-AJD | Hex Nut, #10 NC | 6 |
| 2 | 23-7-GD | Lock Washer, #10 | 2 |
| 3 | 42612 | Throttle Control Assy | 1 |
| 4 | 42611 | Choke Control | 1 |
| 5 | 24-7-BD | Flat Washer, #10 S.A.E. | 2 |
| 6 | 34-99-AMVD | Hex Washer Hd. Self-Tap Screw, #10 NC x 3/4 | 6 |
| 7 | 42609 | Low Oil Warning Light | 1 |
| 8 | 41113 | Hour Meter | 1 |
| 9 | 42620 | Block - Speed Pre-Set | 1 |
| 10 | 24-9-BD | Flat Washer, 1/4 S.A.E. | 1 |
| 11 | 42619 | Knob - Speed Pre-Set | 1 |
| 12 | 42608 | Coolant Temperature Guage | 1 |
| 13 | 42610 | Voltmeter | 1 |
| 14 | 42607 | Keyswitch w/2 Coded Keys | 1 |
| 15 | 41792 | Cable - Battery to Solenoid | 1 |
|  | 41138 | Protective Cap | AR |
| 16 | 99060 | Cable - Battery to Ground | 1 |
| 17 | 97129 | Battery Hold-Down Strap | 1 |
| 18 | 42617 | Cable - Ground Engine to Frame | 1 |
| 19 | 22-12-AJD | Hex Nut, 5/16 NC | 1 |
| 20 | 20-24-AGD | HHCS, 5/16 NC x 3/4 | 1 |
| 21 |  | Battery, 12-Volt | NS |
| 22 | 42615 | Wiring Harness Assembly | 1 |
| 23 | 42618 | Protective Cap (Terminal Block Studs) | 11 |
| 24 | 42863 | Jumper Strip - Term. Block | 1 |
| 25 | 42862 | Terminal Block - Ground | 1 |
| 26 | 22-11-AJD | Hex Nut, 1/4 NC | 1 |
| 27 | 41230 | Cable Clamp | 1 |

# MAINTENANCE RECORD

| Date | | | | | | | | |
|---|---|---|---|---|---|---|---|---|
| | | | | | | | | |
| | | | | | | | | |
| | | | | | | | | |

# MAINTENANCE RECORD

| Date | | | | | | | | |
|---|---|---|---|---|---|---|---|---|
| | | | | | | | | |
| | | | | | | | | |
| | | | | | | | | |