FORM NO. 42890

TORO

MODEL NO. 41022

MOUNTING INSTRUCTIONS

HAND GUN KIT
FOR USE ON THE MULTI-PRO 1100 & 5200

"Right" and "Left" as used in the following instructions, refer to the operator's right and left when seated in the normal operating position. Likewise, "Front" and "Rear" as seen from the operator's position.

- Remove the rubber protective cap from the carriage bolt which protrudes from the rear Tank Band. See FIG. 1.
- Attach the Hose Hook to the bolt and secure it with the 5/16" hex nut and a flat washer.
- Close the Suction Line Valve and remove the Accessory Plug from the Tee in the pressure line as shown below.
- Apply thread sealer and install a Hose Barb into the Reducer Bushing. Screw the Reducer Bushing into the Accessory port. Install the other hose barb into the Hand Gun.
- Place two hose clamps on the Hose and attach one end to the hose barb in the Hand Gun and the other end to the hose barb in the Reducer Bushing at the Tee.
- Open the Valve in the Suction Line.

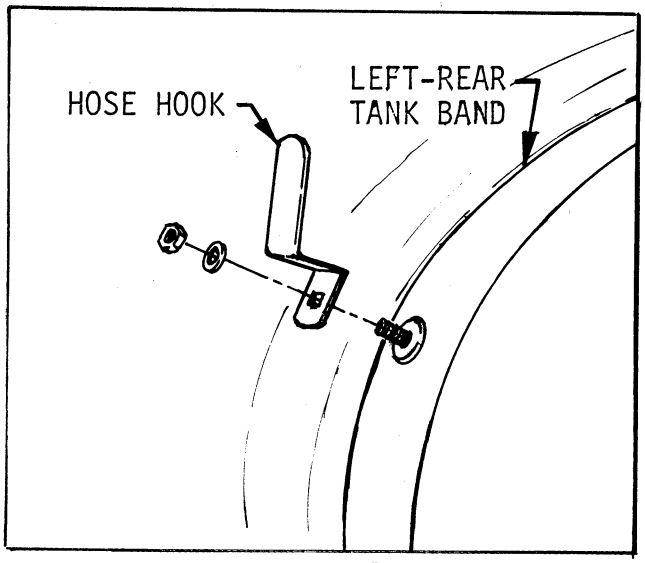

FIG. 1

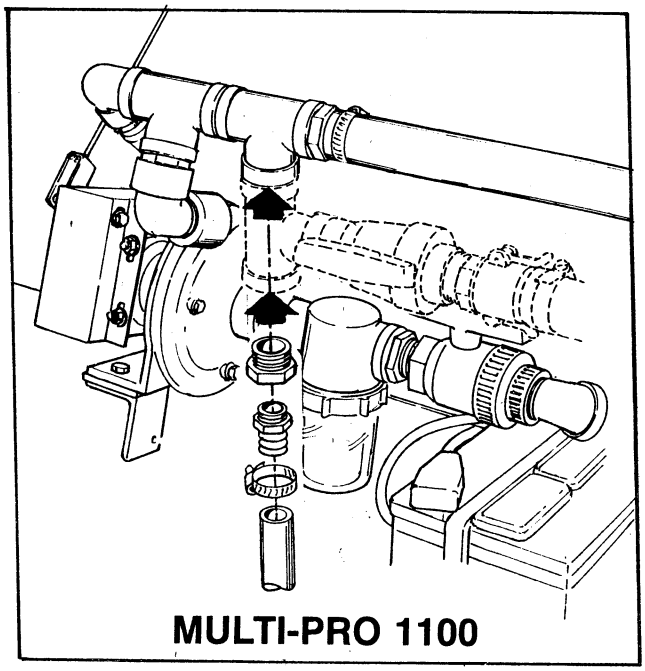
MULTI-PRO 1100

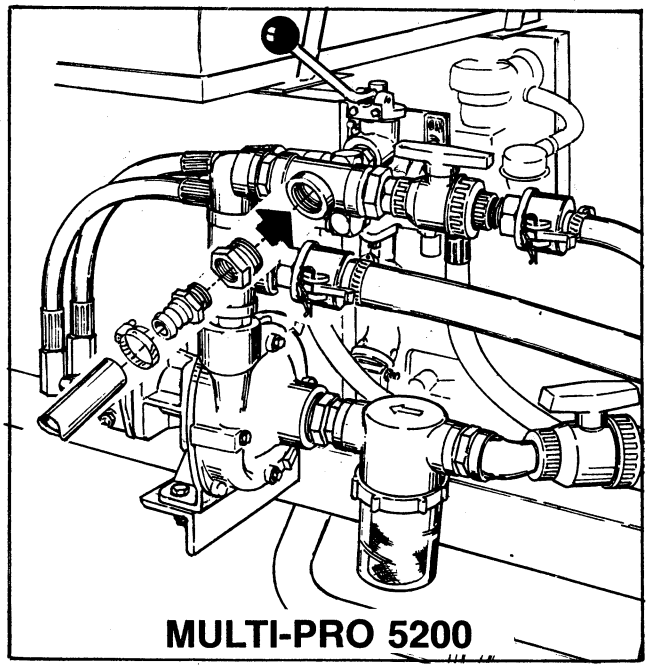
MULTI-PRO 5200

©The Toro Company-1992

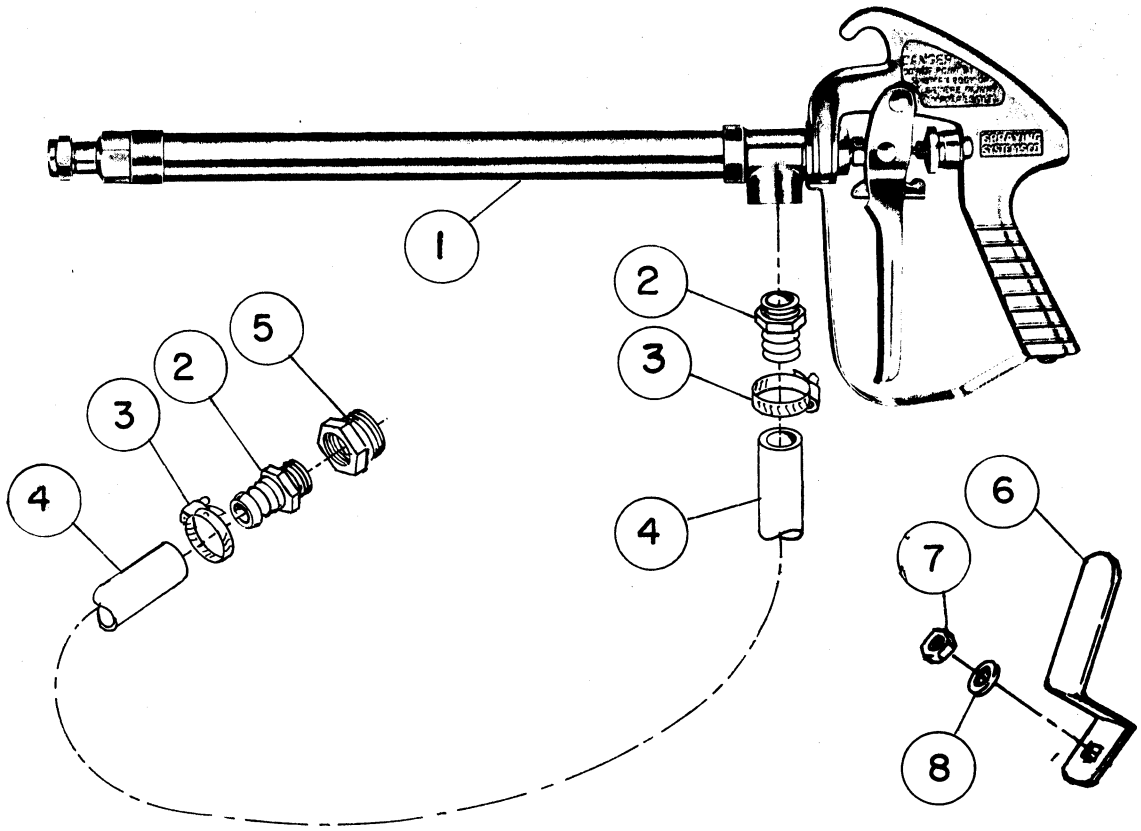

REF.	PART NO.	DESCRIPTION	QTY
1	40311	Hand Spray Gun	1
2	92538	Hose Barb, 1/2" MPT x 1/2" I.D Hose....	2
3	96609	Hose Clamp	2
4	40312	Hose, 1/2" I.D. x 25 ft.	1
5	41306	Reducer Bushing, 1" MPT x 1/2" FPT.....	1
6	40153	Hose Hook.....	1
7	22-12-AJD	Hex Nut. 5/16" NC.....	1
8	24-10-AD	Flat Washer, 5/16".....	1