FORM NO. 42896

TORO®

MODEL NO. 41036 & 41030

SET-UP AND PARTS LIST

SONIC BOOM

Refer to the illustrated Parts List for the details of parts used in assembling the Sonic Boom Kit.

> The procedures for mounting the Sonar Heads to the Booms and the routing of the Sonar Cables and Actuator Wire Assemblys are the same for the MULTI-PRO 1100 AND THE MULTI-PRO 5200

"Right" and "Left" as used in the following instructions, refer to the operator's right or left when seated in the normal operating position. Likewise, "Front" and "Rear" as seen from the operator's position.

SONAR HEADS:

There are right and left hand Sonar Assemblys. When they are properly positioned, the vertical support will angle toward the center of the Vehicle and the Sonar Head will be on the front side of the Boom. See FIG. 1.

■ Remove the U-bolt fasteners at the outer Boom Support and position the vertical support of the Sonar Assembly onto the U-bolt. Secure with the fasteners previously removed.

■ Mark the plug ends of each of the Sonar Cables to designate it as a "RIGHT" or "LEFT" to avoid confusion when the final connections are made at the Sonar Control Box.

■ Route the Sonar Cables along the underside of the Boom Support and toward the center of the Vehicle. Use Sta-Straps to secure the Cable to the Boom Support at each end and at the center. Allow sufficient "slack" in the Cable at the hinge, to permit the Boom to pivot freely.

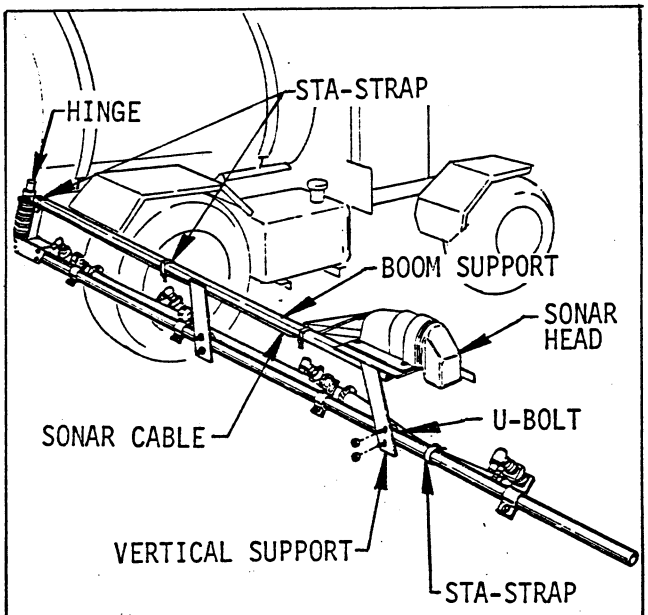

FIG. 1

IMPORTANT! Check to be sure that no obstructions (hoses or nozzles) are in the path of the Sonar signal as it travels from the Sonar Head to the ground surface.

©The Toro Company-1992

ELECTRIC ACTUATORS: (RETRO-FIT)

IF THE STRUTS HAVE BEEN INSTALLED, AS WHEN USED WITH A STANDARD MANUAL BOOM FRAME:

■ Disassemble the Struts and use the clevis pins and hairpin cotters to install the Electric Actuators as shown in FIG. 2.

IF SPRAYER HAS BEEN EQUIPPED WITH AN ELECTRIC BOOM LIFT KIT (Model No. 41030):

■ Disconnect the Actuator Wiring Harness at the Actuators and the Vehicle's power source. NOTE: It is not necessary to remove the Switches or the Wiring Harness.

ELECTRIC ACTUATORS: (ORIGINAL INSTALLATION)

See the Set-Up Instructions furnished with the Electric Boom Lift Kit (Model No. 41030).

NOTE: The Actuator Wiring Harness and Switches included with the Actuators in this Sonic Boom Kit are not necessary to the installation of the Sonic Boom and may be discarded.

■ Mark the male plug ends of each of the Actuator Wire Assemblys to designate it as a "RIGHT" or "LEFT", to avoid confusion when the final connections are made at the Sonar Control Box.

■ Connect the Actuator Wire Assemblys to the Actuator plugs as shown in FIG. 2.

■ Route the Sonar Cables and the Actuator Wire Assemblys along the top and toward the center of the Boom Frame. Use Sta-Straps to secure both the Sonar Cables and the Actuator Wiring Assemblys at several points along the top of the Boom Frame and to the top Cross Support as shown in FIG. 2.

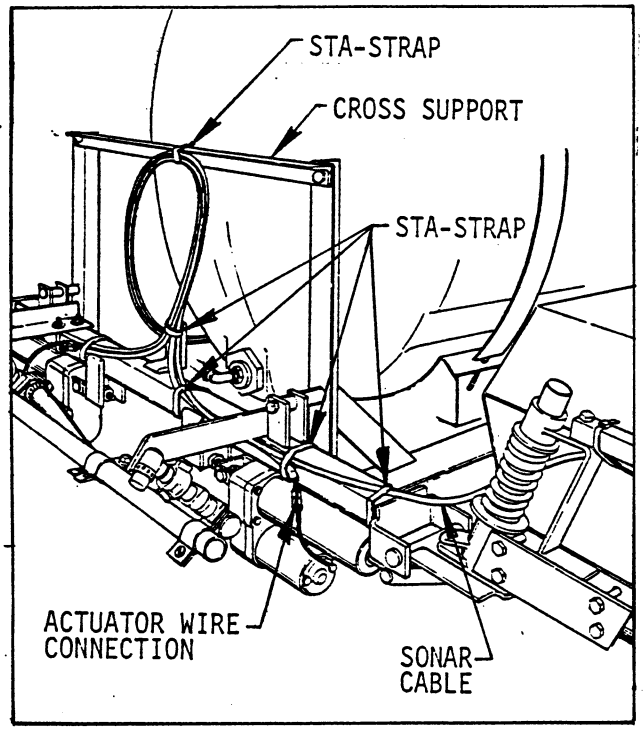

FIG. 2

The procedures for mounting the Sonar Control Box are NOT the same for the MULTI-PRO 1100 AND THE MULTI-PRO 5200. The Sonar Cables, Actuator Wires and the Power Wire must be routed accordingly. Refer to page 3 for the installation of the Control Box on the MULTI-PRO 1100, or page 4 for the MULTI-PRO 5200.

CONTROL BOX INSTALLATION FOR MULTI-PRO 1100

■ Route the Sonar Cables and the Actuator Wire Assemblys forward along the left side of the Spray Tank. Cross over to the right side of the Vehicle to the Seat Support. Secure with Sta-Straps around the engine base.

■ Remove two screws from the top of the Seat Support and use them to secure the Control Box Bracket to the Seat Support. See FIG. 3.

■ Remove the center screw from the front Seat Support panel and use it to secure one end of the Mounting Strap to the Seat Support.

■ Attach the other end of the Strap to the Control Box Bracket with the 5/16 x 3/4" screw.

■ Mount the Control Box Assembly to the Control Box Bracket with four 1/4 x 5/8" screws, lock washers and flat washers.

■ Slide a grommet over each of the Sonar Cable Connectors. Check the "RIGHT" and "LEFT" markings you made earlier on the Cable plugs. Insert the connectors into the appropriate receptacle ("R SONAR" or "L SONAR"). Press the grommets into place to seal the openings in the plastic Control Box.

■ Check the RH/LH markings you made earlier on the Actuator Wire Assembly plug ends. Insert the male plug ends into the appropriate ("R MOTOR" or "L MOTOR") female wire connectors from the Control Head.

■ Insert the male end of the Control Head's Power Wire into the female connector on the Power Wire Assembly.

⚠ CAUTION! Note the tag on the Power Wire Assembly. Damage to the electrical components will result if you do not observe the polarity as directed when connecting the Power Wire Assembly!

■ Crimp the spade terminal onto the WHITE wire of the Power Wire Assembly and connect it to the Ground Terminal Block. See FIG. 5, page 4.

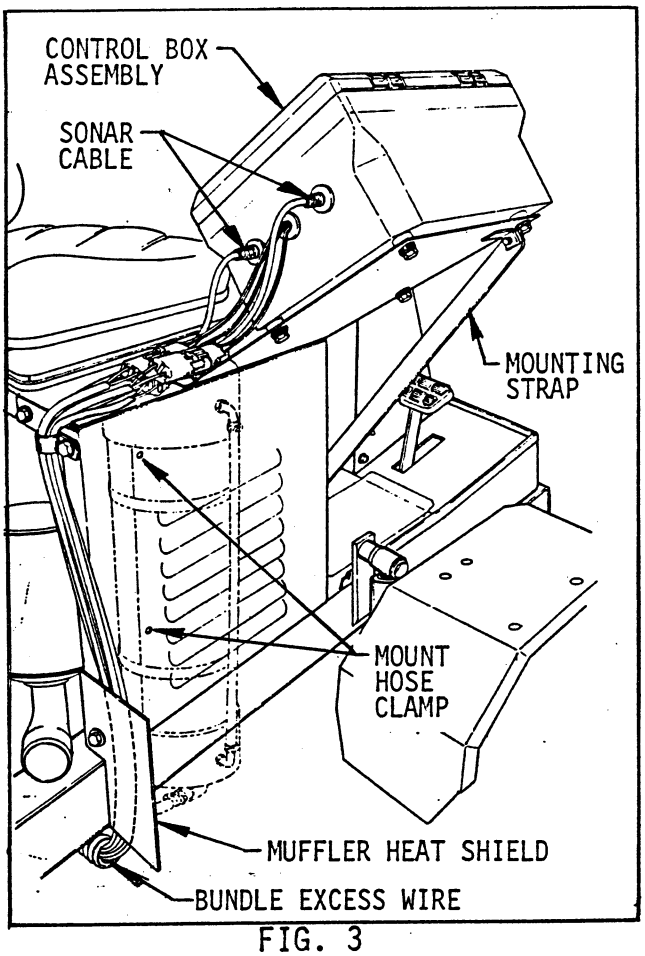

FIG. 3

■ Crimp the push-on terminal onto the BLACK wire of the Power Wire Assembly and connect it to the red wire at the Fuse Block.

IF THE SPRAYER HAS NOT BEEN EQUIPPED WITH A FOAM MARKER: Place two hose clamps around all of the wires and attach the hose clamps in the two holes in the side panel of the Seat Support. Secure with two 1/4 x 5/8" screws and lock nuts.

■ Route all of the wires from the Control Box along the upper edge of the Seat Support and down in front of the Muffler Heat Shield. Place a hose clamp around all of the wires.

■ Remove the top screw at the rear of the Seat Support and use it to secure the clamp to the Seat Support.

■ Coil the excess Actuator Wires and Solar Cables into a bundle and secure to the Vehicle frame with a Sta-Strap.

CONTROL BOX INSTALLATION FOR MULTI-PRO 5200

■ Route the Sonar Cables and the Actuator Wire Assemblys forward, along the left side of the Spray Tank. Follow the Vehicle's Wiring Harness, bringing the Cables and Wire Assemblys up through the floor board at the steering column and across the underside of the dash panel.

■ Slide two hose clamps over the Cables and Wire Assemblys. Use hex nuts to secure the clamps to the screws inside the Console.

■ Bring the Cables and Wire Assemblys up and over the edge of the Dash Panel as shown in FIG. 4.

■ Remove two screws from the top front of the right hand side of the Vehicle Console. Use the screws to mount the Control Box Bracket to the Console.

■ Mount the Control Box Assembly to the Control Box Bracket with four 1/4 x 5/8" screws, lock washers and flat washers.

■ Slide a grommet over each of the Sonar Cable Connectors. Check the "RIGHT" and "LEFT" markings you made earlier on the Cable plugs. Insert the connectors into the appropriate receptacle ("R SONAR" or "L SONAR"). Press the grommets into place to seal the openings in the plastic Control Box.

■ Check the RH/LH markings you made earlier on the Actuator Wire Assembly plug ends. Insert the male plug ends into the appropriate ("R MOTOR" or "L MOTOR") female wire connectors from the Control Head.

■ Insert the male end of the Control Head's Power Wire into the female connector on the Power Wire Assembly.

CAUTION! Note the tag on the Power Wire Assembly. Damage to the electrical components will result if you do not observe the polarity as directed when connecting the Power Wire Assembly!

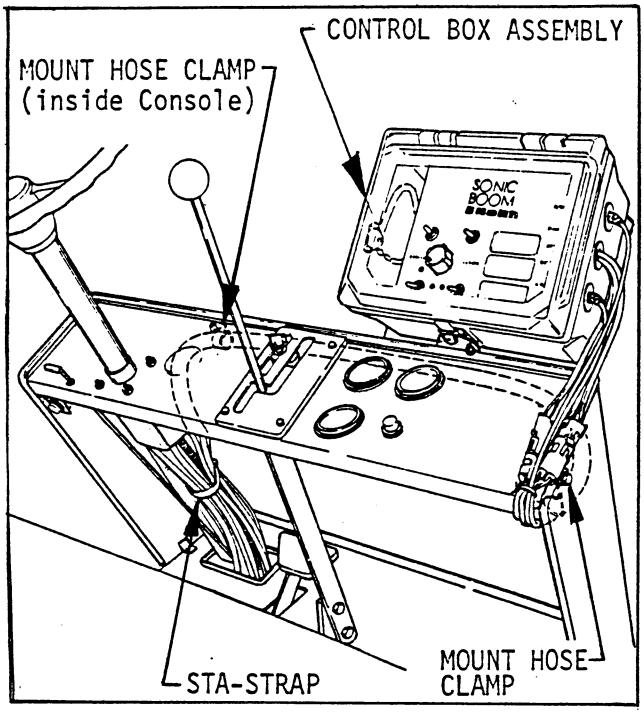

FIG. 4

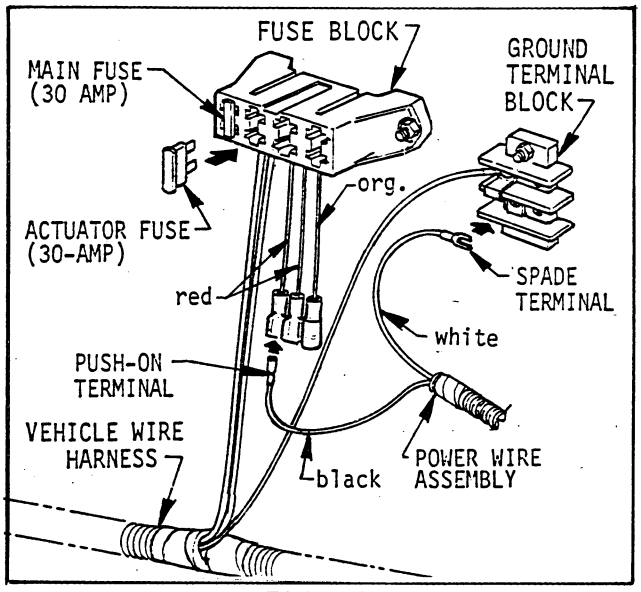

FIG. 5

■ Crimp the spade terminal onto the WHITE wire of the Power Wire Assembly and connect it to the Ground Terminal Block. See FIG. 5.

■ Crimp the push-on terminal onto the BLACK wire of the Power Wire Assembly and connect it to the red wire at the Fuse Block.

■ Insert the 30-amp Fuse (furnished with the Actuator Kit) into the Fuse Block, next to the Main Fuse.

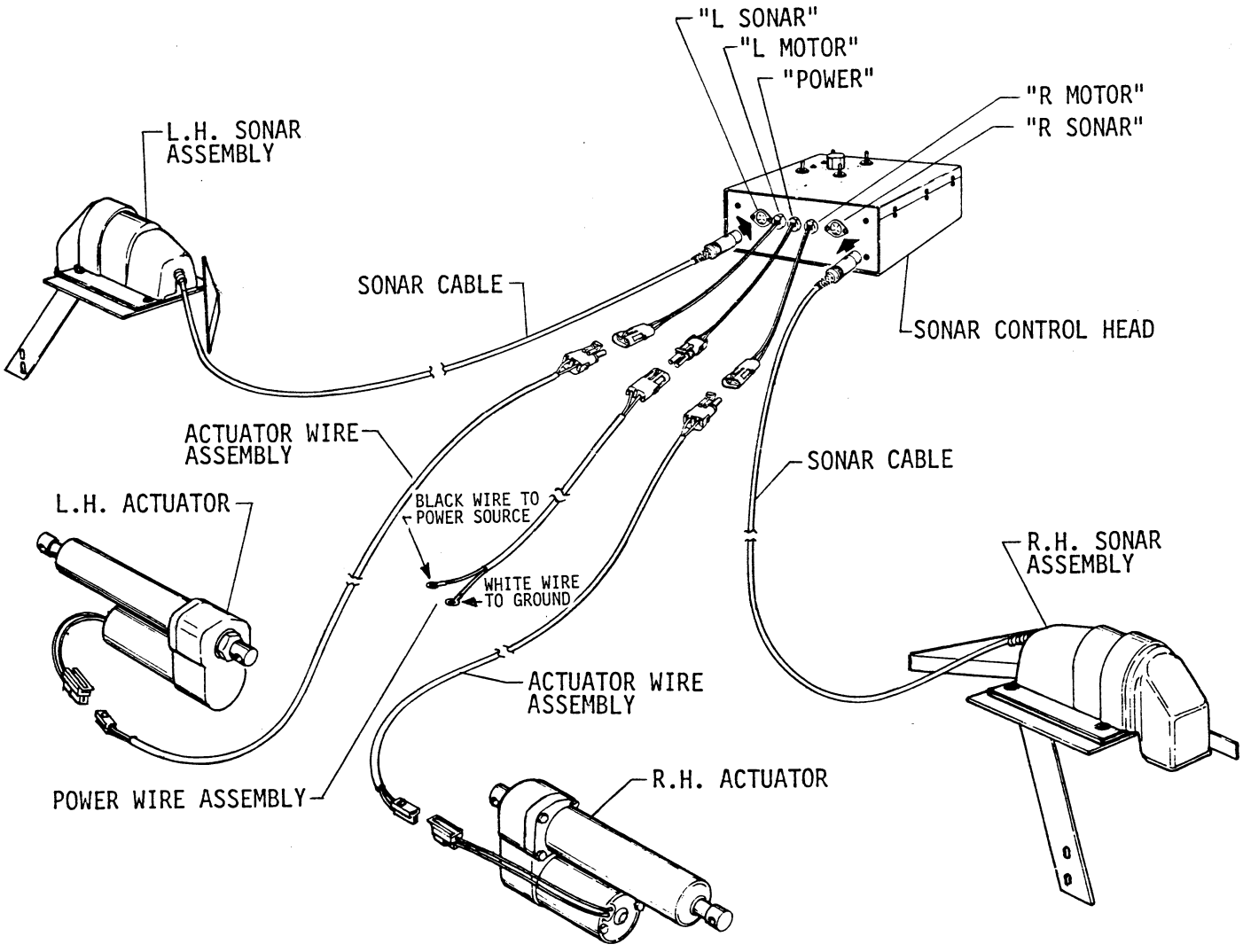
"L SONAR"
"L MOTOR"
"POWER"
"R MOTOR"
"R SONAR"
L.H. SONAR ASSEMBLY
SONAR CABLE
SONAR CONTROL HEAD
ACTUATOR WIRE ASSEMBLY
SONAR CABLE
L.H. ACTUATOR
BLACK WIRE TO POWER SOURCE
WHITE WIRE TO GROUND
R.H. SONAR ASSEMBLY
ACTUATOR WIRE ASSEMBLY
POWER WIRE ASSEMBLY
R.H. ACTUATOR

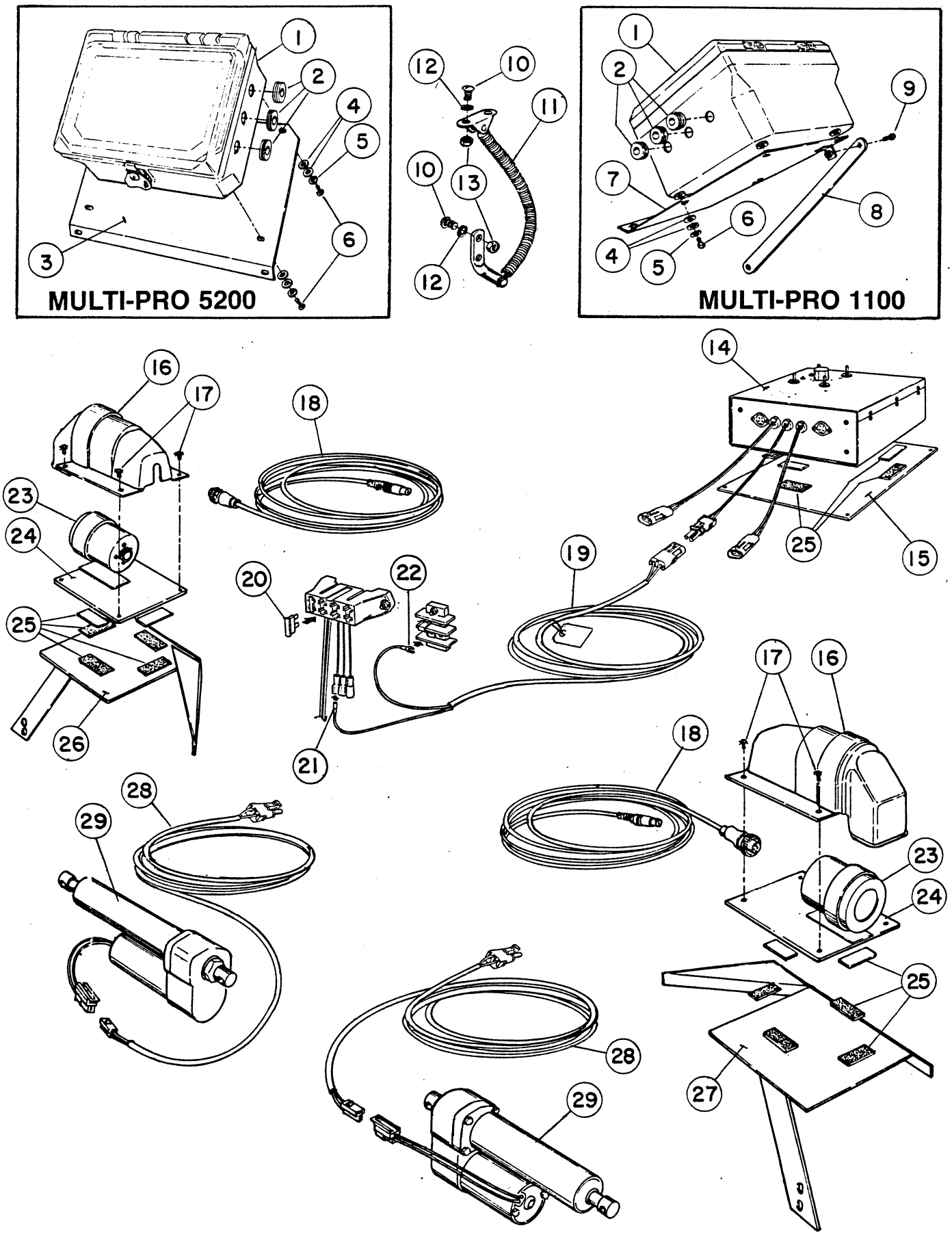
MULTI-PRO 5200
MULTI-PRO 1100

REF	PART NO.	DESCRIPTION	QTY
1	42800	Control Box	1
2	42811	Grommet	3
3	42790	Control Box Bracket	1
4	24-9-AD	Flat Washer, 1/4 S.A.E.	8
5	23-9-GD	Lock Washer, 1/4 Med.	4
6	20-2-AD	H.H.C.S., 1/4 NC x 5/8	6
7	42797	Control Box Bracket Assy.	1
8	42792	Brace Strap	1
9	20-24-AGD	H.H.C.S., 5/16 NC x 3/4	1
10	21-60-AGOD	Mach Screw, #6 NC x 1/2	4
11	42801	Hatch Holder	1
12	23-5-GD	Lock Washer #6 Med.	4
13	22-7-AJD	Hex Nut, #6 NC	4
14	42812	Sonar Control Head	1
15	42810	Back Panel	1
16	42804	Sonar Cover	2
17	42807	Special Screw	8
18	42808	Sonar Cable	2
19	42819	Power Wire Assy	1
20	42765	30 - Amp Fuse (f/w #41030 Actuator Kit)	2
21	42827	Insulated Terminal, .250 Push-On	1
22	42875	Insulated Terminal, #10 Spade	1
23	42803	Sonar Head	2
24	42805	Sonar Base	2
25	42806	Velcro Strip	24
26	42798	Sonar Mount Assy. (L.H.)	1
27	42793	Sonar Mount Assy. (R.H.)	1
28	42818	Actuator Wire Assy.	2
29	42833	Boom Actuator (f/w Stock #3248)	2
*	42817	Decal - "CAUTION, WASH"	2
*	41230	Hose Clamp	2
*	95672	Sta-Strap	12
*	22-11-AJFD	Lock Nut, 1/4 NC	2
*	22-12-AJD	Hex Nut, 5/16 NC	2

* Indicates Parts Furnished But Not Shown

CLEANING INSTRUCTIONS: This sensor uses an acoustically transparent foam to protect the ultrasonic transducer. To clean, remove the foam and wash with a weak soap and water solution. Rinse with water and allow to air dry before reinstalling.

CAUTION: Never use high pressure spray or garden hose to clean.

Part No. 42817 Located on top of each Sonar Cover

IMPORTANT!

When spraying with the Sonic Boom System, adjust the tips of the outer booms to the lowest point possible. See FIG. 1.

To adjust the boom height:

- Tighten the jam nut as close against the clevis as it will go.
- Tighten the end nut as far as possible against the boom frame support member.

Repeat the procedure for the boom on the opposite side.

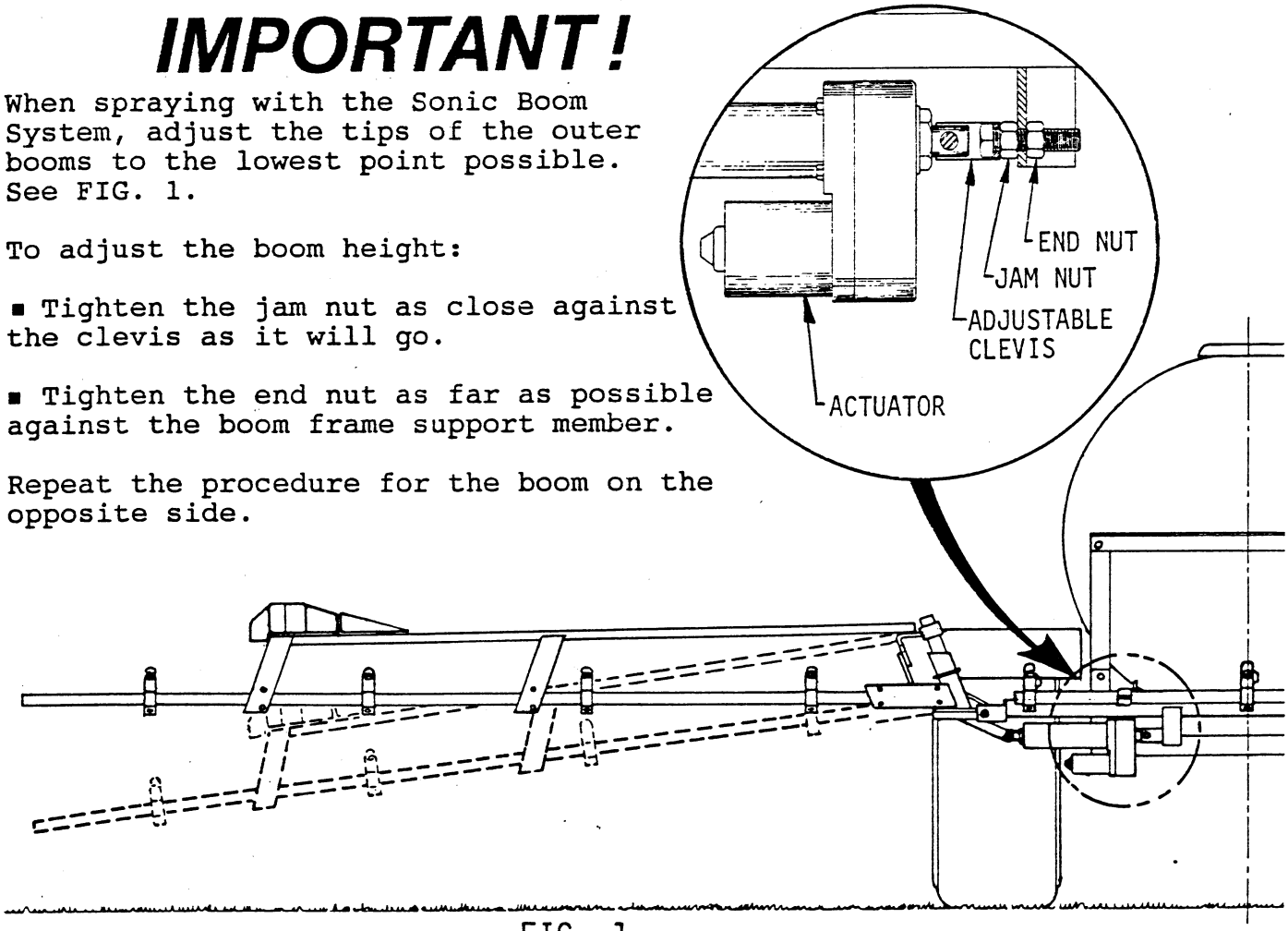

FIG. 1