FORM NO. 42909

TORO

MODEL NO. 41524

SET-UP AND PARTS LIST

FOAM MARKER KIT

FOR USE ON THE MULTI-PRO 5200 VEHICLE

Refer to the illustrated Parts List for the details of parts used in assembling the FOAM MARKER KIT.

■ Locate, mark and drill, DRILLING THROUGH THE TOP SURFACE ONLY, one 9/32" dia. hole at 8-inches from the ends of the right and left Boom Pipes. See FIG. 1. These holes are used for the installation of the Split Eyelet Connectors.

■ Install the Split Eyelet Connectors into The right and left Boom Pipes.

■ Assemble the Compressor complete. IMPORTANT! Make sure the BRASS Check Valve is installed at the Tee on top of the Compressor. Mount the Compressor to the inside of the Seat Support, using three #8 x 1/2" self-tapping screws and lock washers.

■ Assemble the Tank complete. IMPORTANT! Make sure the PLASTIC Check Valve is installed at the Tee in the bottom of the Tank. Mount the Tank as shown in FIG. 2. Remove the nut which holds the Centrifugal Pump to the Vehicle frame and use it to secure the lower leg of the Mounting Strap. Mount the upper leg of the Strap to the Seat Spring, using two 5/16 x 1" cap screws, flat washers and lock nuts.

■ Install the ON/OFF Switch to the Tank Mounting Strap as shown. Attach the push-on terminals of the two orange wires to the Switch.

■ Insert the stripped end of the Compressor wire into the butt-splice connector on the 11-inch Switch wire and crimp the connector.

■ Connect the 25-inch wire from the Switch to the orange wire at the Fuse Block.

■ Ground the black wire from the Compressor to the screw on top of the Compressor.

■ Connect the hose from the Compressor to the tee on the side of the Tank.

■ Connect the Boom Hoses to the Control Valve on top of the Tank. The longer of the two Hoses supplies the left Boom.

■ Connect the Boom Hoses to the Split-Eyelets in the Boom Pipes. Secure the Hoses to the Tank Bands with Sta-Straps.

■ Insert the 20-amp Fuse into the Fuse Block.

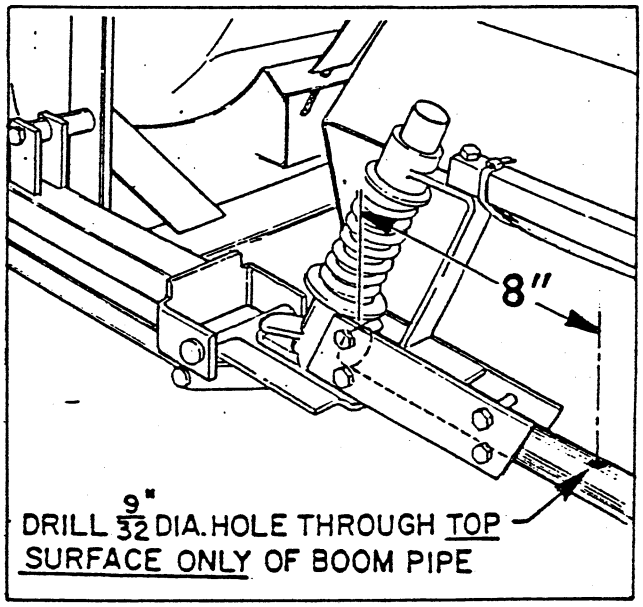

FIG. 1

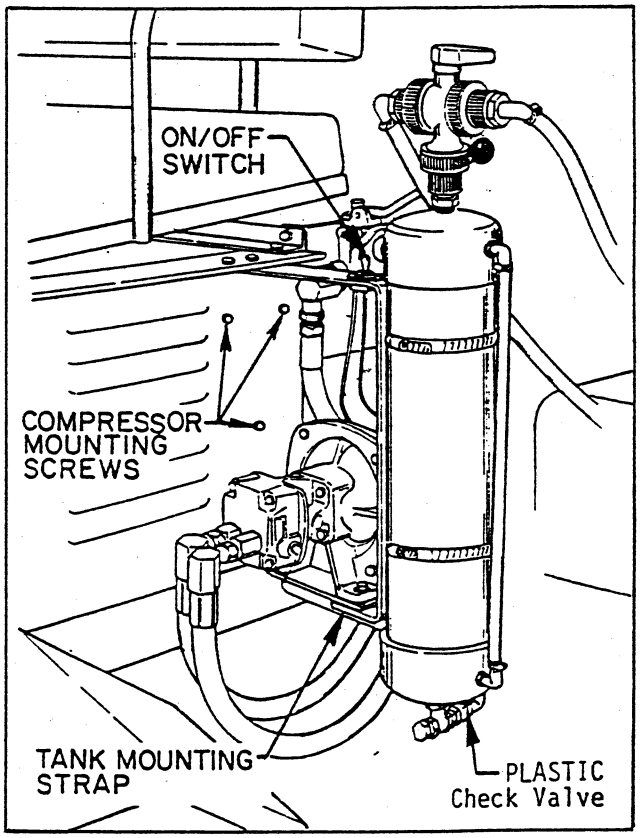

FIG. 2

©The Toro Company-1992

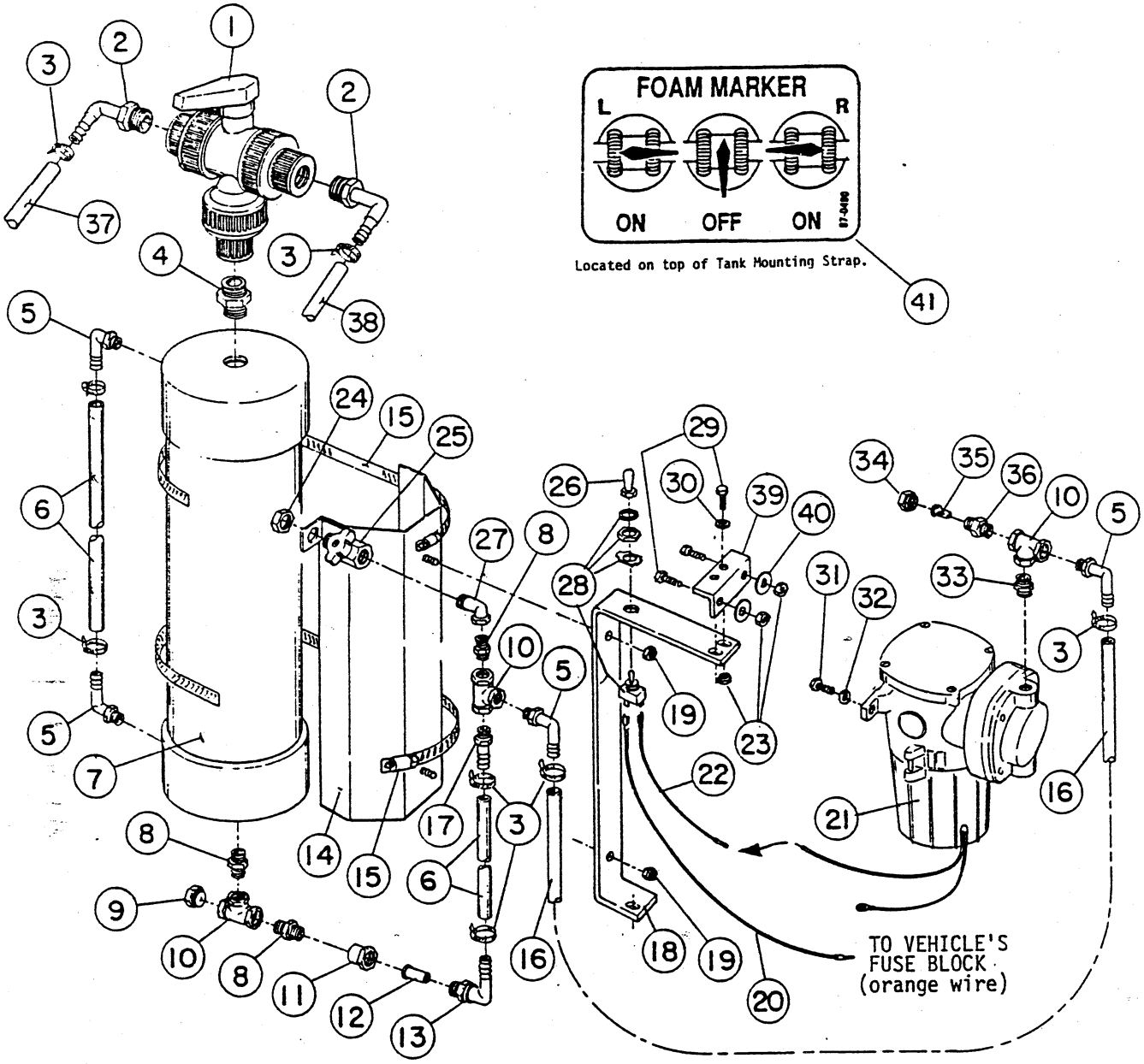
FOAM MARKER
L
R
ON
OFF
ON
Located on top of Tank Mounting Strap.
TO VEHICLE'S FUSE BLOCK (orange wire)

REF	PART NO.	DESCRIPTION	QTY
1	41272	3-Way Valve	1
2	41295	90 Hose Barb	2
3	96609	Hose Clamp	6
4	41294	Close Nipple	1
5	41292	90 Hose Barb, 1/4 MPT x 3/8 HB	6
6	41261	Hose, 3/8 I.D. x 17 1/4"	2
7	41264	Foam Tank	1
8	41288	Close Nipple, 1/4 NPT	3
9	41287	Hex Plug	1
10	41286	Tee, 1/4 NPT	3
11	41289	Outlet Adapter	1
12	41291	Check Valve	1
13	41290	90 Nozzle Body	1
14	41269	Tank Mounting Assembly	1
15	41299	Hose Clamp	2
16	41591	Hose, 3/8 I.D. x 31"	1
17	21121	Hose Barb, 1/4 MPT x 3/8 HB	1
18	42075	Tank Mounting Strap	1
19	22-11-AJFD	Hex Lock Nut, 1/4 NC	2
20	42077	Wire Assembly	1
21	41259	Compressor	1
22	41278	Wire Assembly	1
23	22-12-AJFD	Hex Lock Nut, 5/16 NC	4
24	98489	Lock Nut	1
25	41282	Ball Valve, 1/4 NPT	1
26	30955	Boot	1
27	41311	St. Elbow, 1/4 NPT	1
28	30953	Off/On Switch	1
29	20-26-AGD	Hex Hd Cap Screw, 5/16 NC x 1"	4
30	24-10-AD	Flat Washer, 5/16	4
31	34-76-AMTD	Hex Washer Hd Self-Tap Screw, #8 NC x 1/2	3
32	23-7-GD	Lock Washer, #10	3
33	41281	Reducing Nipple 1/4 MPT x 1/8 MPT	1
34	41285	Nozzle Cap	1
35	41284	Strainer & Check Valve	1
36	41283	Nozzle Body	1
37	42074	Hose, 3/8 I.D. x 102" (Left Boom)	1
38	42073	Hose, 3/8 I.D. x 138" (Right Boom)	1
39	42596	Tank Mounting Angle	1
40	356308	Special Washer	2
41	87-0490	Decal - "ON/OFF"	1
	42764	Fuse 20-Amp	1

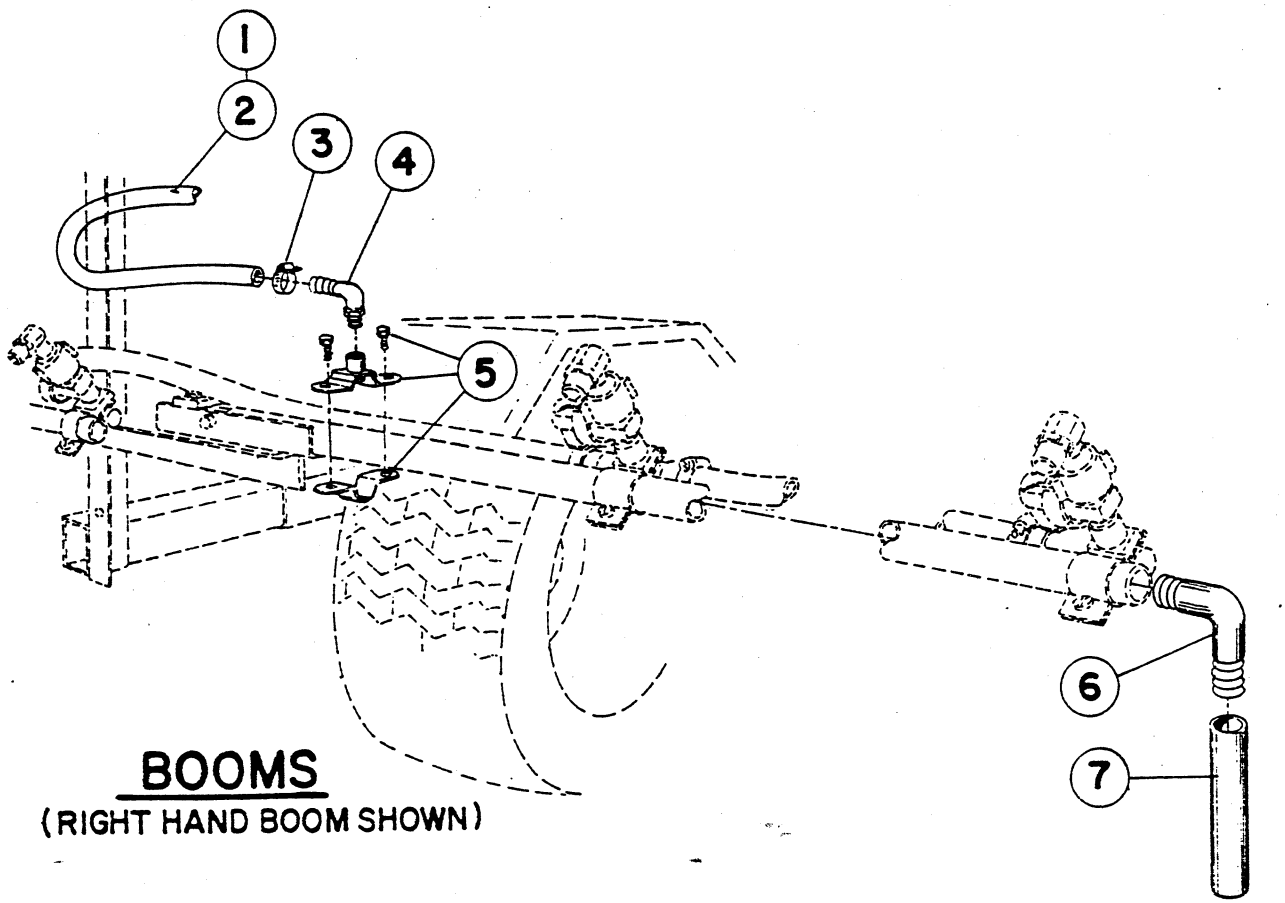

BOOMS
(RIGHT HAND BOOM SHOWN)

REF	PART NO.	DESCRIPTION	QTY
1	42074	Hose (Left Boom)	1
2	42073	Hose (Right Boom)	1
3	96609	Hose Clamp	4
4	41292	90 Hose Barb, 1/4 MPT x 3/8 HB	2
5	41296	Split-Eyelet Connector	2
6	41297	90 Hose Barb, 3/4 x 3/4 HB	2
7	41298	Extension Hose, 3/4 I.D. x 6"	2