FORM NO. 42913

TORO

MODEL NO. 41552

SET-UP AND PARTS LIST

SPREADER MOUNTING KIT

"Right" and "Left" as used in the following instructions refer to the operator's right or left when seated in the operating position. Likewise, "front" and "rear" as seen from the operator's position.

Use laquer thinner to remove the rust preventive coating from the Spreader's in-put shaft and keyway.

Loose-assemble the Adjusting Lug to the upright lugs on the Spreader Frame Assembly, using two 5/8 x 2-1/2" cap screws, washers and hex nuts. NOTE: Refer to the illustrated Parts List for details.

Install the Spreader Unit onto the Spreader Frame Assembly. Align the 3-point hitch lugs with the Adjusting Lugs as shown in FIG. 1 and secure with two 5/8 x 2-1/2" cap screws, washers and hex nuts. DO NOT TIGHTEN FASTENERS.

Secure the rear of the Spreader Unit to the Spreader Frame Assembly with one 5/8 x 1-1/2" cap screw, washers and hex nut, as shown in FIG. 2. DO NOT TIGHTEN FASTENERS.

After the Spreader unit is positioned firmly within the Frame Assembly and all fasteners are properly aligned with their respective holes... TIGHTEN ALL FASTENERS SECURELY.

Mount the Motor Mounting Plate to the Spreader Frame Assembly with two 1/2 x 1-1/2" cap screws flat washers and lock nuts. DO NOT TIGHTEN FASTENERS.

Mount the Hydraulic Motor to the Mounting Plate with two 1/2 x 1-1/2 cap screws and lock nuts.

Join the two End Yokes and install one on the Spreader's in-put shaft and the other on the Hydraulic Motor's out-put shaft.

Visually check the alignment of the two shafts and adjust if necessary, by re-positioning the Motor Mounting Plate. The two shafts must be in alignment from side to side, as well as up and down. This alignment is CRITICAL to the operation of the Spreader. Failure to have the two shafts in alignment with one another will result in extensive wear or damage!

When alignment has been completed, tighten the Motor Mounting Plate fasteners securely.

Install the Universal Joint Cover on the Motor Mounting Plate with four 5/16 x 3/4" cap screws and washers.

CAUTION!! DO NOT OPERATE THE SPREADER WITHOUT THE UNIVERSAL JOINT COVER IN PLACE!

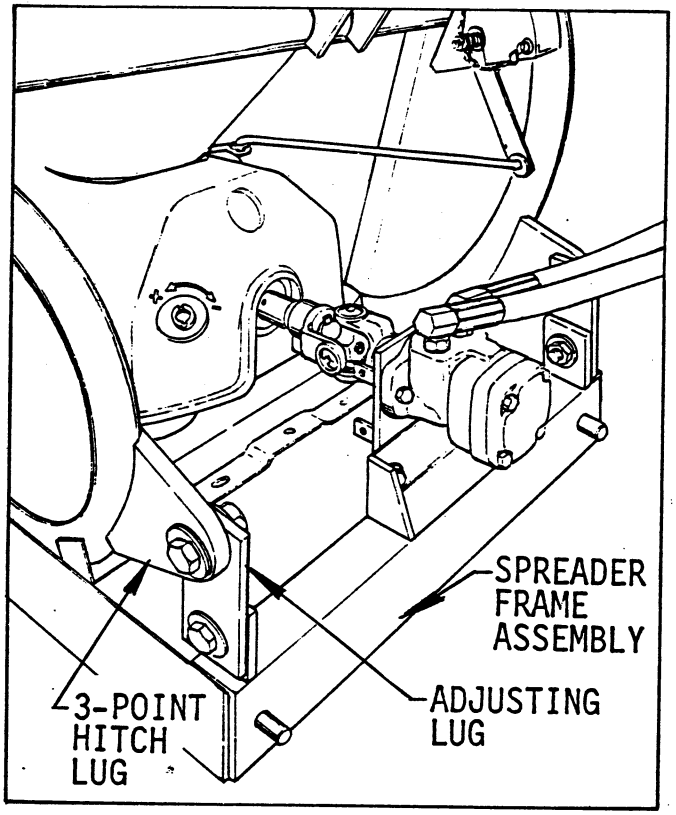

FIG. 1

⚠ NOTE The Universal Joint Cover has been removed in this illustration for the sake of clarity only. NEVER OPERATE THIS SPREADER WITH THE UNIVERSAL JOINT COVER REMOVED!

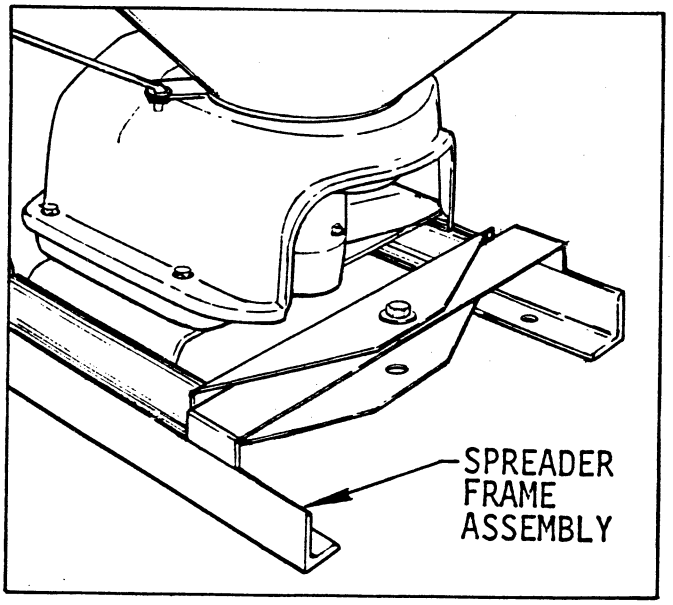

FIG. 2

Install the Spreader Mounting Frame on the MAXI-PRO Vehicle by inserting the front pins through the holes in the Vehicle Frame cross member and securing it at the rear with two 5/8 x 1-1/2" cap screw, washers and hex nuts. TIGHTEN FASTENERS SECURELY.

HYDRAULIC HOSES:

Apply thread sealer and attach a Qwik-Coupler on one end of each of the two Hydraulic Hoses.

Apply thread sealer and install the male swivel fittings on the other end of the Hoses into the ports in the Hydraulic Motor.

NOTE: Hydraulic components must be kept as clean as possible during assembly operations

A pipe joint sealant, compatible with hydraulic oil must be applied to all threaded fittings. Teflon tape is not recommended.

NOTE: Connect the Hose from the Motor's RIGHT port to the Qwik-Coupler at the Directional Valve's TOP port. Connect the Hose from the Motor's LEFT port to the Qwik-Coupler at the Directional Valve's BOTTOM port.

Check the fluid level in the Hydraulic Reservoir, making sure it is at approximately two inches from the top. Replenish as necessary with 10W40 Motor Oil.

Operate the hydraulic system for several minutes to warm up. Check all connections for leaks.

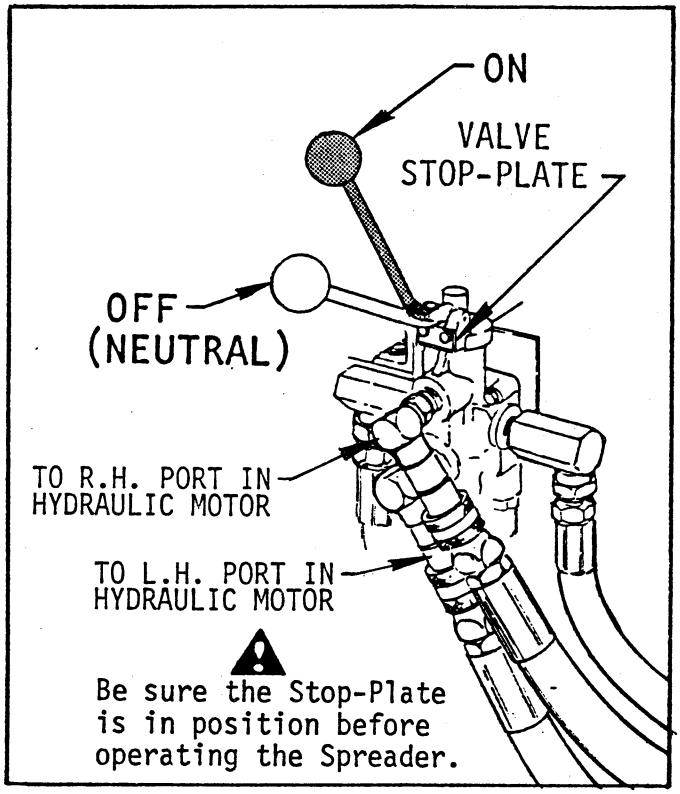

FIG. 3

SPREADER MOUNTING KIT

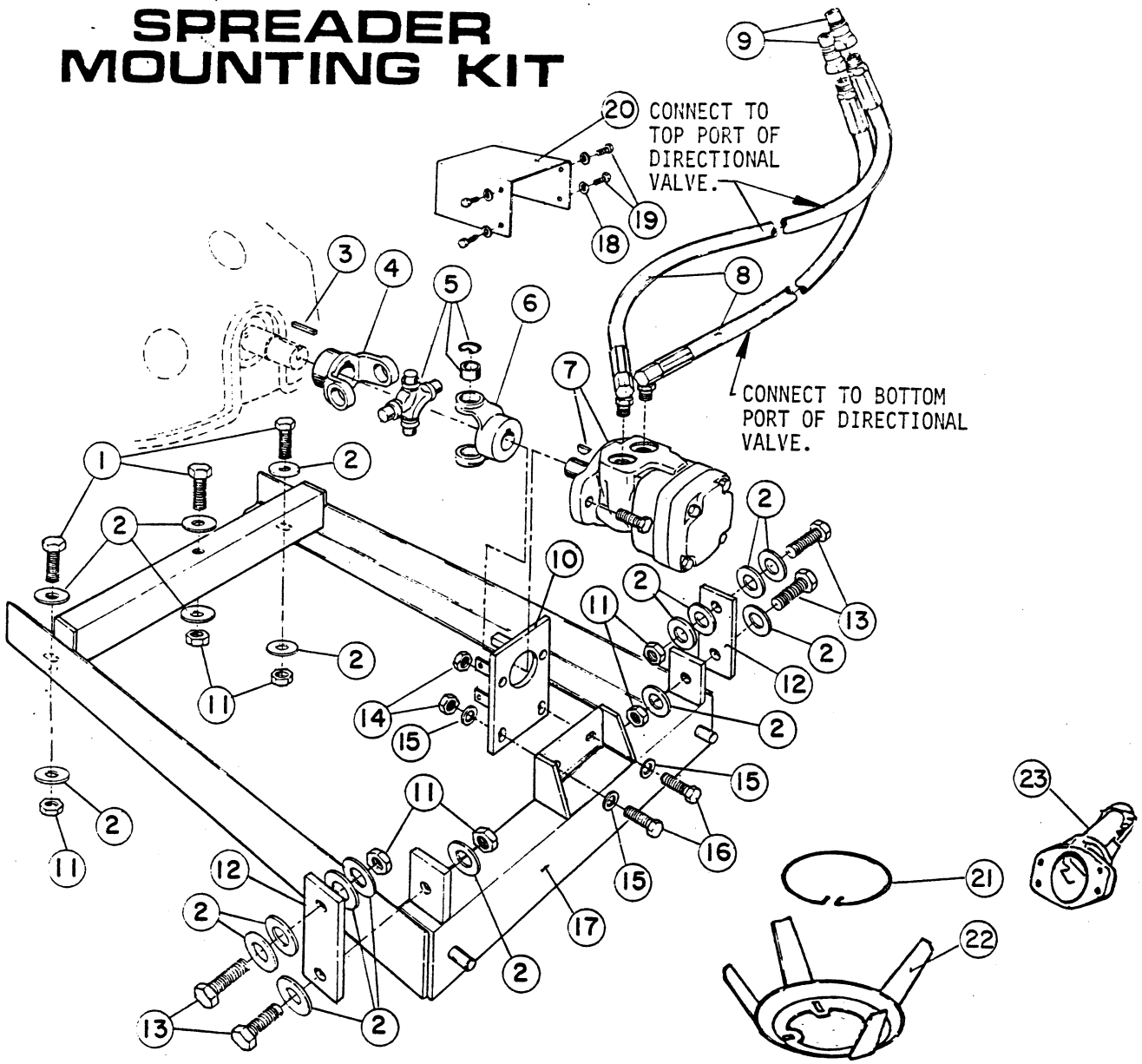

REF	PART NO.	DESCRIPTION	QTY
1	20-121-AGD	HHCS, 5/8 NC x 1 1/2 (Grade 5)	3
2	24-15-AD	Flat Washer, 5/8 U.S.S.	18
3	314233	Sq. Key, 1/4 x 1 1/4	1
4	42552	End Yoke, 1 3/16"	1
5	42554	Journal & Bearings	1
6	42553	End Yoke, 1"	1
7	42549	Hydraulic Motor	1
8	41836	Hydraulic Hose Assembly	2
9	41790	Hydraulic Quick - Coupler	2
10	42556	Motor Mounting Plate Assy	1
11	22-17-AJD	Hex Nut, 5/8 NC	7
12	42545	Adjustment Lug	2
13	20-125-AGD	HHCS, 5/8 NC x 2 1/2" (Grade 5)	4
14	22-15-AJFD	Lock Nut, 1/2 NC	4
15	24-13-BD	Flat Washer, 1/2 S.A.E.	4
16	20-87-AGD	HHCS, 1/2 NC x 1 1/2" (Grade 5)	4
17	42535	Spreader Frame Assembly	1
18	24-10-BD	Flat Washer, 5/16 S.A.E.	4
19	20-24-AGD	HHCS, 5/16 x 3/4 (Grade 5)	4
20	42557	Universal Joint Cover	1
21	41579	Agitator Locking Ring	1
22	41578	Agitator Rim	1
23	41506	Sand Spout	1