FORM NO. 42915

TORO

MODEL NO. 41560-20101 & UP

SET-UP AND PARTS LIST

# CARGO BED
## FOR USE ON THE MULTI-PRO 5200 VEHICLE

Refer to the illustrated Parts List for the details of parts used in assembling the Cargo Bed and Hydraulics.

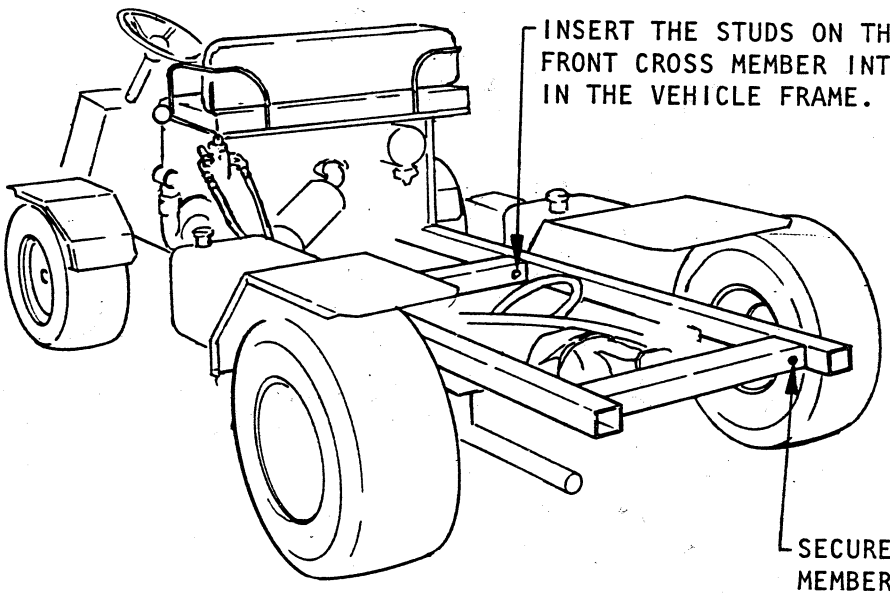


## SAFETY AND INSTRUCTION DECALS

The following decals are installed on the machine. If any become damaged or illegible, replace it. The decal part number is listed below.

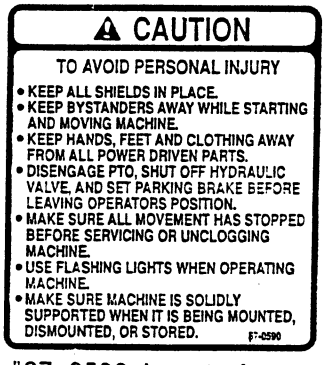


#87-0590 Located on right-front of Cargo Bed.




#87-0460 Located one on left-front of Cargo Bed and one on Tailgate.

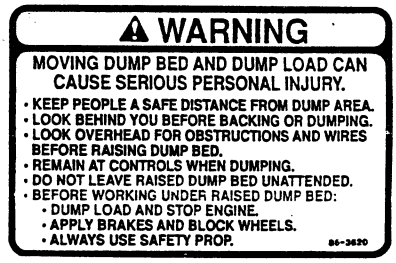


#86-3620 Located one on left side of Cargo Bed and one on Tailgate.

©The Toro Company-1992

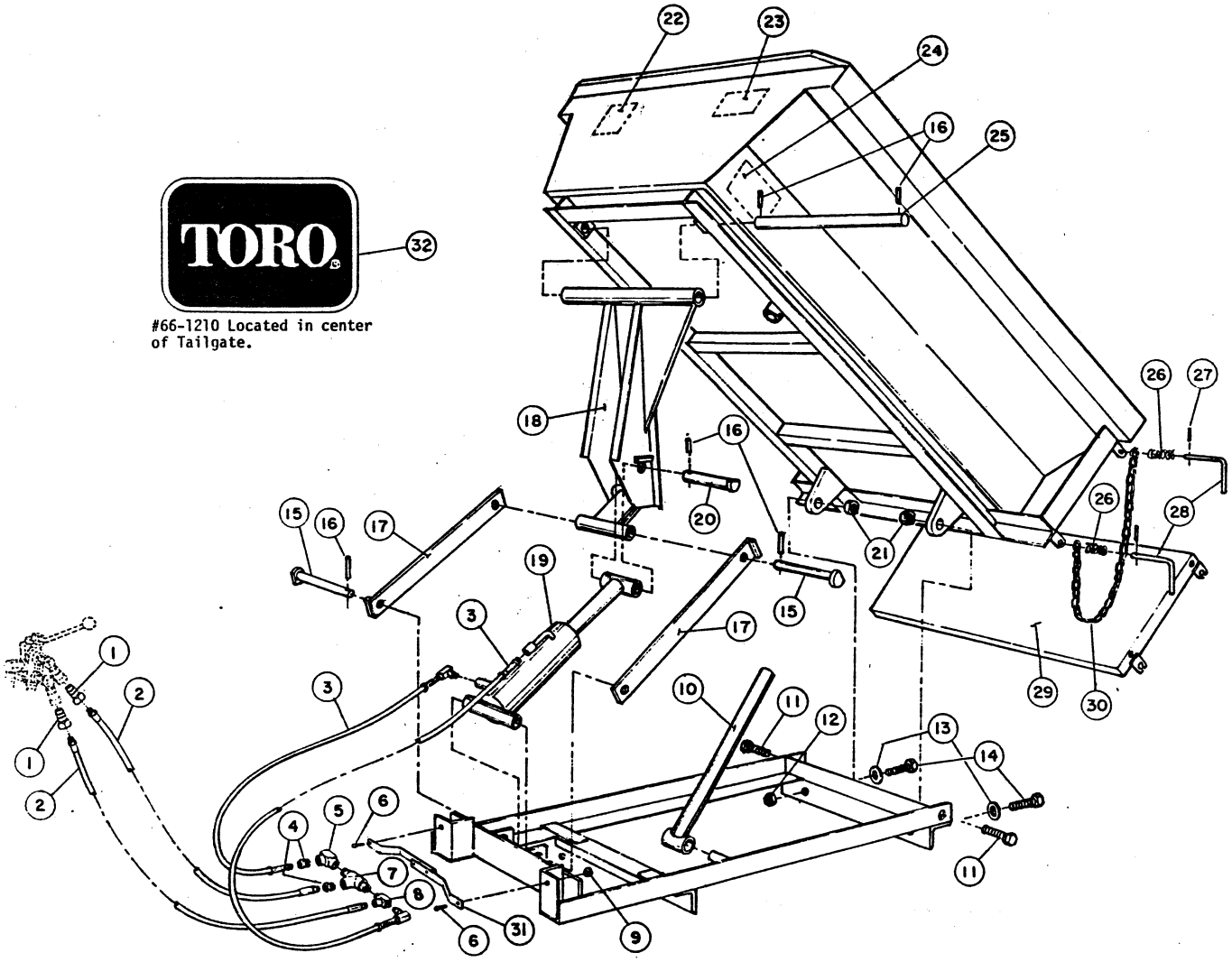
TORO
32
#66-1210 Located in center of Tailgate.
22
23
24
16
25
26
27
18
16
20
21
26
28
15
16
17
19
3
15
17
1
2
3
10
11
12
13
14
29
30
1
2
4
5
6
7
8
6
31
9
11

# CARGO BED
## MODEL NO. 41560-20101 & UP

| REF | PART NO. | DESCRIPTION | QTY |
|---|---|---|---|
| 1 | 41790 | Hydraulic Qwik Coupler-Male | 2 |
| 2 | 42362 | Hydraulic Hose Assy | 2 |
| 3 | 42695 | Hydraulic Hose Assy | 2 |
| 4 | 10203 | Hydraulic Bushing 1/2 MPT x 1/4 FPT | 2 |
| 5 | 42697 | Hydraulic 90 Elbow, 1/2 | 1 |
| 6 | 20-5-AD | HHCS, 1/4 NC x 1" | 1 |
| 7 | 42694 | Pilot Check Valve | 1 |
| 8 | 42696 | Hydr. Tee, 1/4 NPT - Male Run | 1 |
| 9 | 22-11-AJD | Hex Nut, 1/4 NC | 1 |
| 10 | 42379 | Safety Support | 1 |
| 11 | 42385 | Hinge Bolt | 2 |
| 12 | 22-17-AJD | Hex Nut, 5/8 NC | 2 |
| 13 | 24-15-AD | Flat Washer, 5/8 | 2 |
| 14 | 20-121-AGD | HHCS, 5/8 NC x 1 1/2 | 2 |
| 15 | 42376 | Cylinder Base Pin | 2 |
| 16 | 29-199-C | Roll Pin | 5 |
| 17 | 42377 | Support Link | 2 |
| 18 | 42375 | Linkage Arm | 1 |
| 19 | 42378 | Hydraulic Cylinder Assy | 1 |
| 20 | 42380 | Cylinder Cross Pin | 1 |
| 21 | 22-17-AJFD | Hinge Lock Nut, 5/8 NC | 2 |
| 22 | 87-0590 | Decal- "Avoid Serious Injury" | 2 |
| 23 | 87-0460 | Decal- "Maximum Load Limit" | 2 |
| 24 | 86-3620 | Decal- "Moving Dump Bed" | 1 |
| 25 | 42374 | Lift Cross Pin | 1 |
| 26 | 42382 | Spring | 4 |
| 27 | 42381 | Roll Pin | 4 |
| 28 | 42383 | Handle | 4 |
| 29 | 42386 | Tail Gate | 1 |
| 30 | 42384 | Chain | 2 |
| 31 | 42832 | Manifold Strap | 1 |
| 32 | 66-1210 | Decal - "Toro" | 1 |