FORM NO. 3312-177

TORO®

MODEL NO. 20661-3000001 & UP

PARTS CATALOG

21" S.P. REAR BAGGER

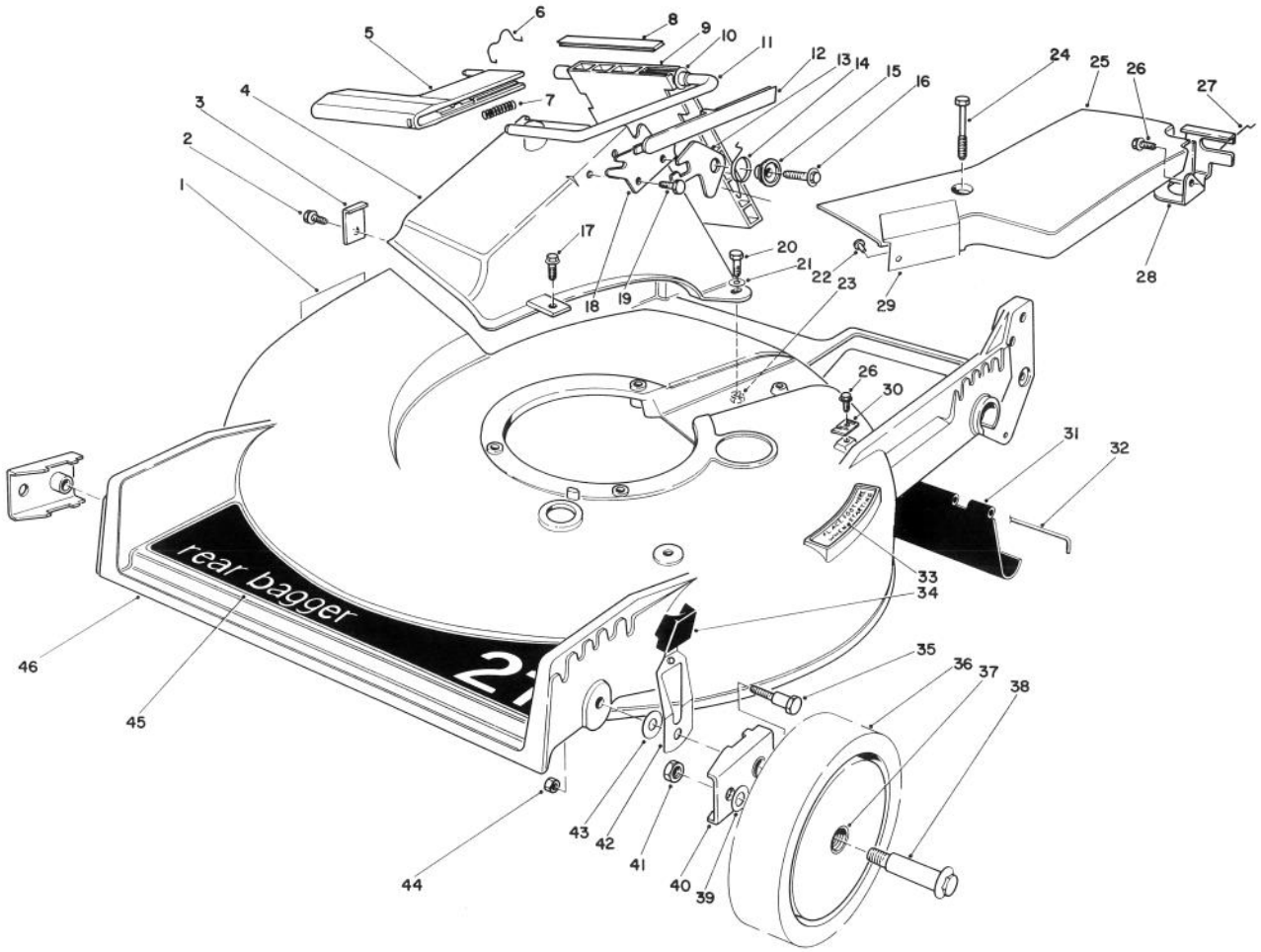

HOUSING ASSEMBLY

Ref. No.	Part No.	Description	No. Used
1	43-8480	Decal — Danger	1
2	12-3270	Screw — Thread Forming	1
3	47-6540	Clip — Tunnel	1
4	46-3500	Tunnel — Discharge	1
5	46-3520	Handle — Door	1
6	47-5840	Retainer — Door	1
7	46-7060	Spring — Compression	1
8	46-6820	Cover — Door	1
9	46-3510	Door — Discharge	1
10	23-0880	Bushing	1
11	46-3530	Rod — Door	1
12	46-7050	Cover — Handle	1
13	42-4010	Latch — Safety	1
14	33-4860	Spring — Torsion	1
15	43-4840	Spacer — Latch	1

Ref. No.	Part No.	Description	No. Used
16	46-8091	Screw — Self Tapping Hex Washer Hd.	1
17	11-9760	Screw — Thread Forming Hex Washer Hd.	1
18	23-1040	Plate — Latch	1
19	46-8090	Screw — Self Tapping Hex Washer Hd.	1
20	321-8	Screw — Cap Hex Hd.	2
21	3256-22	Washer — Plain	2
22	3295-35	Rivet	2
23	3296-42	Nut — Lock	2
24	37-7260	Screw — Self Tapping Hex Hd.	2
25	38-8742	Belt Cover (Incl. Ref. #22 & 29)	1
26	32144-11	Screw — Thread Forming Hex Washer Hd.	2

COPYRIGHT © ALL RIGHTS RESERVED

The Toro Company — 1983
MINNEAPOLIS, MN 55420 — U.S.A.

PRICE $1.00

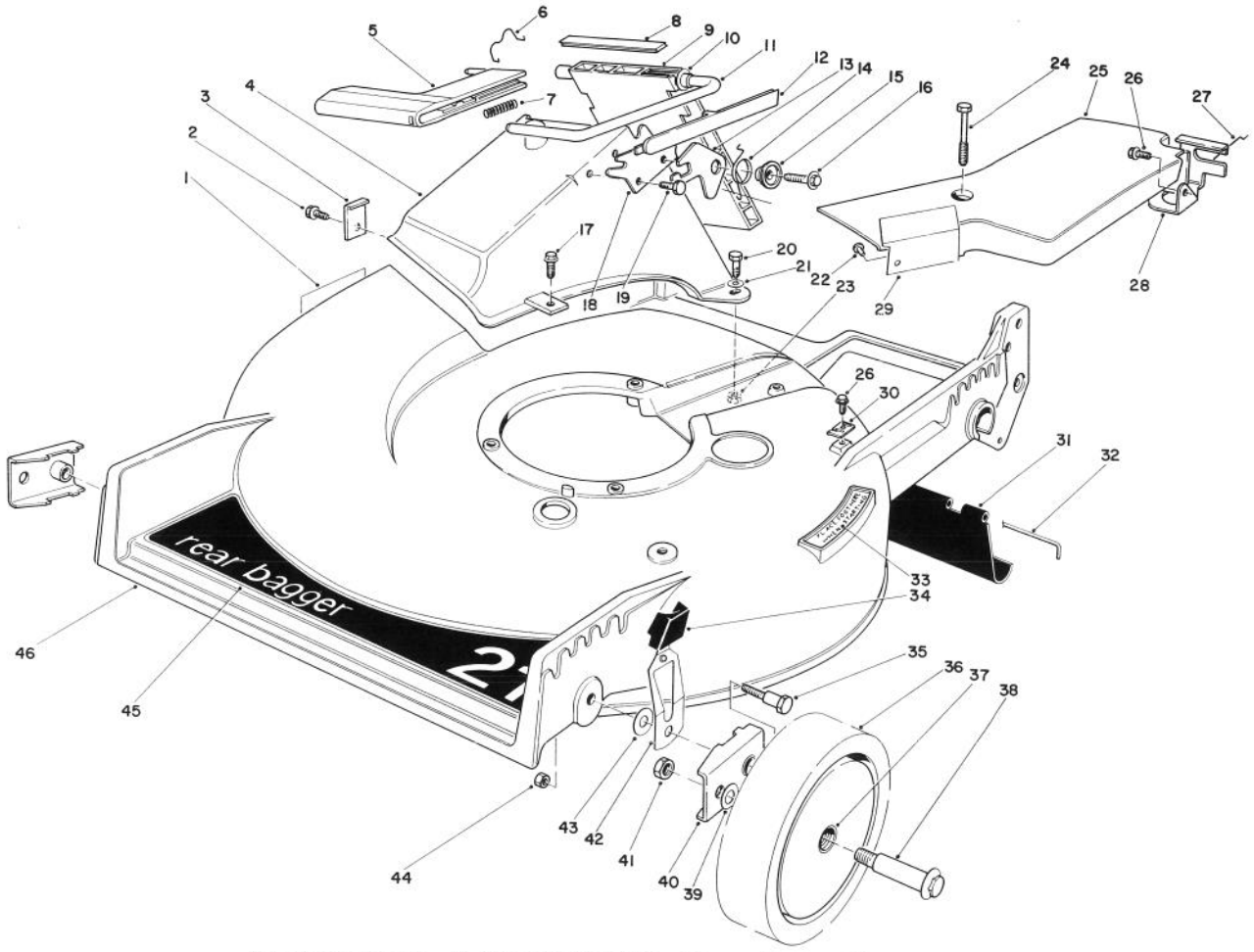

HOUSING ASSEMBLY (Continued)

Ref. No.	Part No.	Description	No. Used
27	46-7030	Retainer — Cable	1
28	46-5870	Bracket — Traction Adjustment	1
29	38-8730	Heat Shield	1
30	46-5610	Clamp Cable	1
31	44-0580	Shield — Trailing	1
32	33-3208	Rod — Shield	1
33	46-7370	Decal — Step Pad	1
34	25-7740	Knob Arm	2
35	44-5270	Screw — Pivot Hex Hd.	2
36	44-0560	Wheel & Tire Assembly (Incl. Ref. #37)	2

Ref. No.	Part No.	Description	No. Used
37	27-6250	Bushing	2
38	27-6230	Wheel Bolt	2
39	40-1940	Washer — Wheel Bolt	2
40	47-2940	Pivot Arm Assembly	2
41	32146-6	Nut — Lock	2
42	44-0990	Spring Arm Assembly	2
43	5-4460	Washer — Pivot	2
44	3296-29	Nut — Lock	2
45	44-0450	Decal — 21" Rear Bagger	1
46	11-4099	Housing (Incl. Ref. #1&33)	1

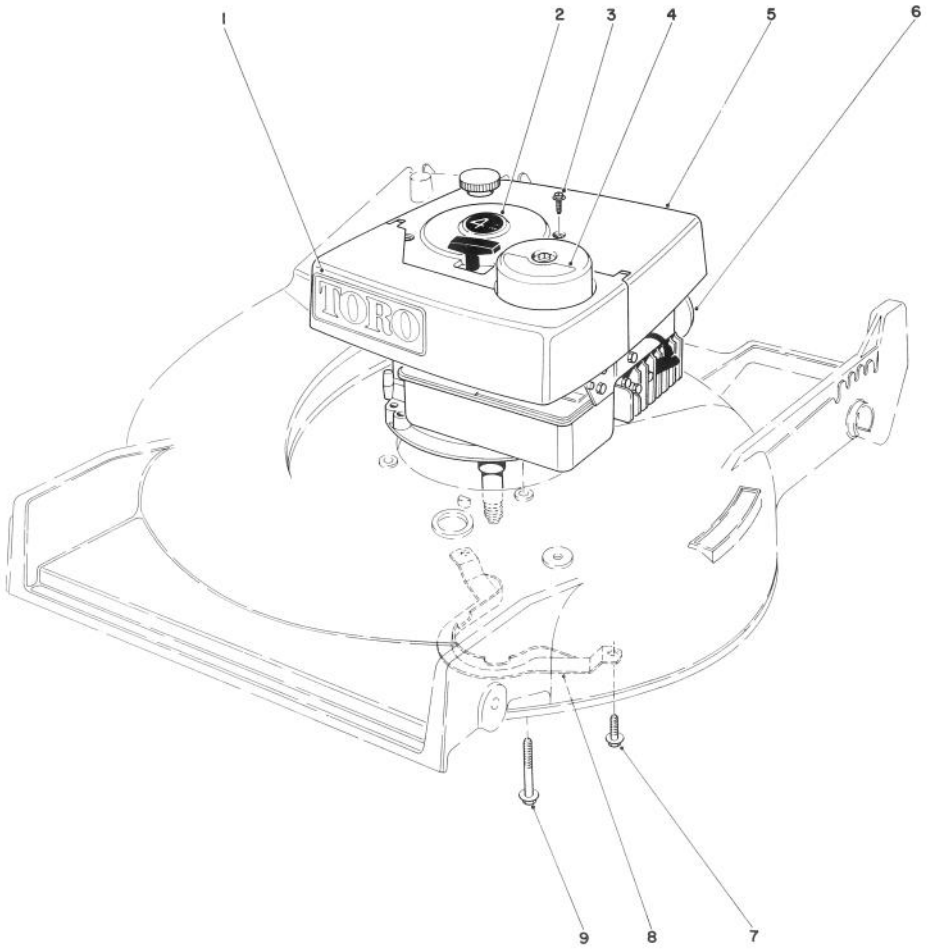

ENGINE ASSEMBLY

Ref. No.	Part No.	Description	No. Used
1	44-0510	Decal — Shroud	1
2	38-0790	Decal — 4 Cycle	1
3	32144-60	Screw — Self Tapping Slotted Hex Hd.	4
4	38-0780	Decal — Air Filter	1
5	46-3671	Shroud Assembly	1
6	221-734	Engine	1
7	11-9760	Screw — Thread Forming Hex Washer Hd.	2
8	40-5720	Guide — Belt	1
9	11-0581	Screw — Thread Forming Hex Washer Hd.	3

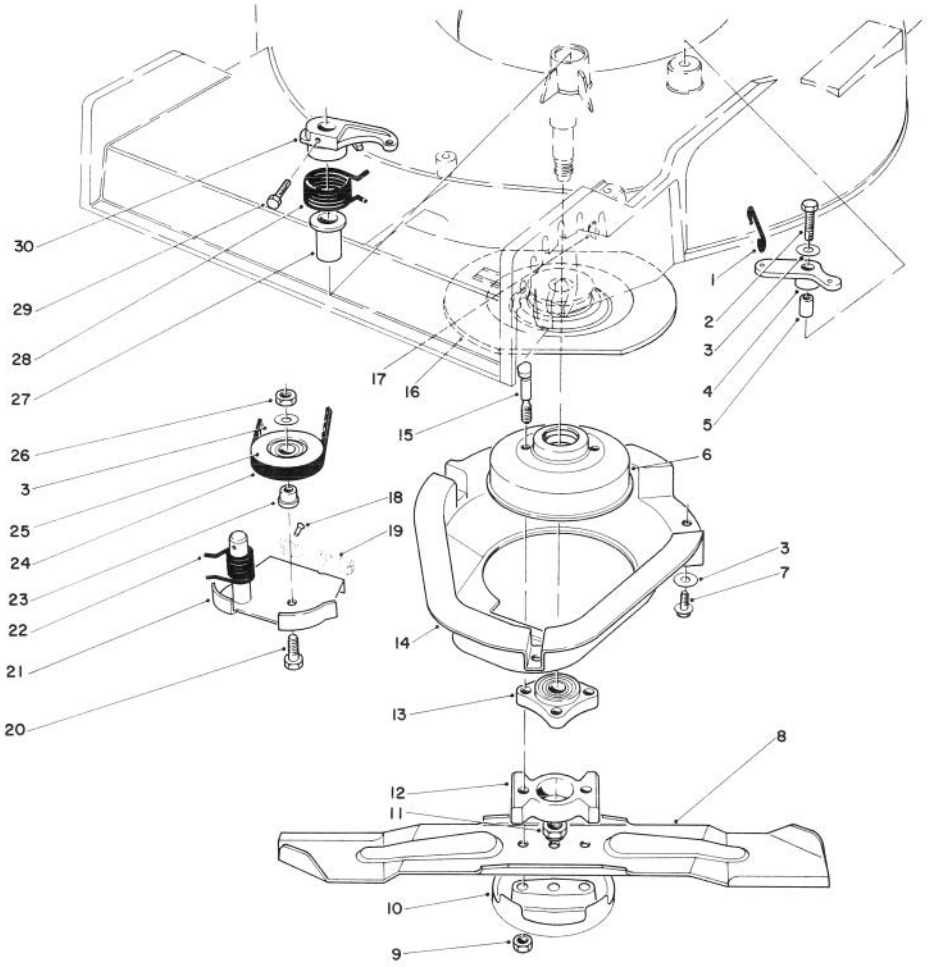

BLADE BRAKE CLUTCH ASSEMBLY

Ref. No.	Part No.	Description	No. Used
1	43-1380	Link — Control	1
2	32104-107	Screw — Self-Tapping Hex Hd.	1
3	3256-23	Washer — Plain	5
4	46-5640	Bell Crank	1
5	42-1330	Sleeve — Bell Crank	1
6	42-1020	Drum — Brake	1
7	32144-11	Screw — Thread Forming Hex Washer Hd.	3
8	42-1000	Blade 21"	1
9	32146-6	Nut — Lock	2
10	42-0910	Cup — Anti Scalp	1
11	3296-33	Nut — Lock	1
12	42-6760	Spacer — Blade	1
13	42-6890	Hub Assembly	1
14	46-5690	Shield	1
15	42-3190	Bolt — Blade	2

Ref. No.	Part No.	Description	No. Used
16	43-7720	Flywheel	1
17	3257-3	Key Woodruff	1
18	3295-23	Rivet — Semi Tubular	2
19	42-0890	Pad — Brake	1
20	322-16	Capscrew	1
21	42-0940	Brake Plate	1
22	46-5670	Spring — Torsion Lower	1
23	46-5630	Hub — Idler Pulley	1
24	42-0880	V-Belt	1
25	46-5650	Pulley Idler	1
26	3296-47	Nut — Lock	1
27	46-6680	Bushing — Flanged	1
.28	46-5660	Spring — Torsion Upper	1
29	32104-97	Screw — Self Tapping Hex Hd.	1
30	42-0950	Lever	1

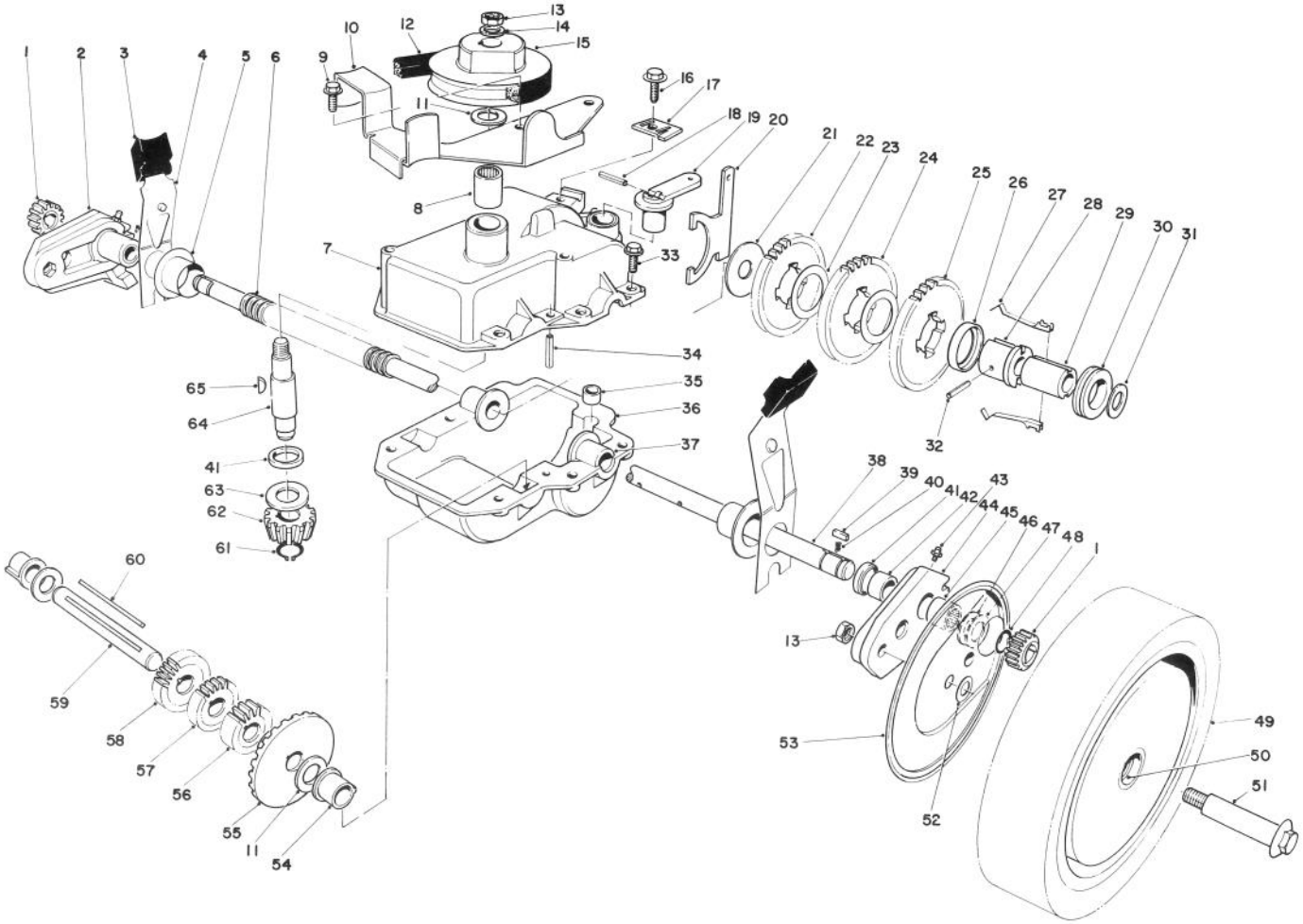

GEAR CASE ASSEMBLY

Ref. No.	Part No.	Description	No. Used
1	39-9160	Pinion	2
2	29-9590	Pivot Arm Assembly — R.H. (Incl. Ref. #41-43 & 45)	1
3	25-7740	Knob — Arm	2
4	44-1010	Spring Arm Assembly	2
5	42-3520	End Cap	2
6	24-7922	Cover — Drive Shaft	1
7	39-7282	Upper Case	1
8	47-6720	Bearing	1
9	12-3270	Screw — Special	2
10	46-3570	Bracket — Belt Guide	1
11	36-4790	Washer — Thrust	3
12	36-8070	V-Belt	1
13	32146-6	Locknut	3
14	3256-45	Washer	1
15	39-6740	Pulley	1
16	32144-11	Screw — Thread Forming	1
17	46-5610	Cable Clamp	1
18	32121-99	Coil Pin	1
19	29-9560	Lever — Shift	1
20	29-9520	Shift Yoke	1
21	29-9690	Washer	1
22	42-4740	Gear — 38T	1

Ref. No.	Part No.	Description	No. Used
23	36-4770	Spacer — Gear	2
24	29-9271	Gear — 42T	1
25	46-3560	Gear — 52T	1
26	39-7830	Key Retainer	1
27	39-6470	Key	2
28	39-6730	Sleeve Body	1
29	39-6720	Sleeve	1
30	29-9340	Shift Collar	1
31	36-4780	Washer	1
32	32121-106	Coil Pin	1
33	32144-44	Screw — Tapping	6
34	32121-100	Roll Pin	1
35	29-9570	Bushing — Yoke	1
36	29-9410	Lower Case	1
37	47-5220	Bushing — Output Shaft	2
38	44-0850	Output Shaft	1
39	39-9680	Key — Rectangular	2
40	39-9650	Spring	2
41	47-7260	Seal	3
42	47-2890	Bushing	2
43	302-56	Fitting Grease	2
44	29-9640	Pivot Arm Assembly — L.H. (Incl. Ref. #41-43 & 45)	1

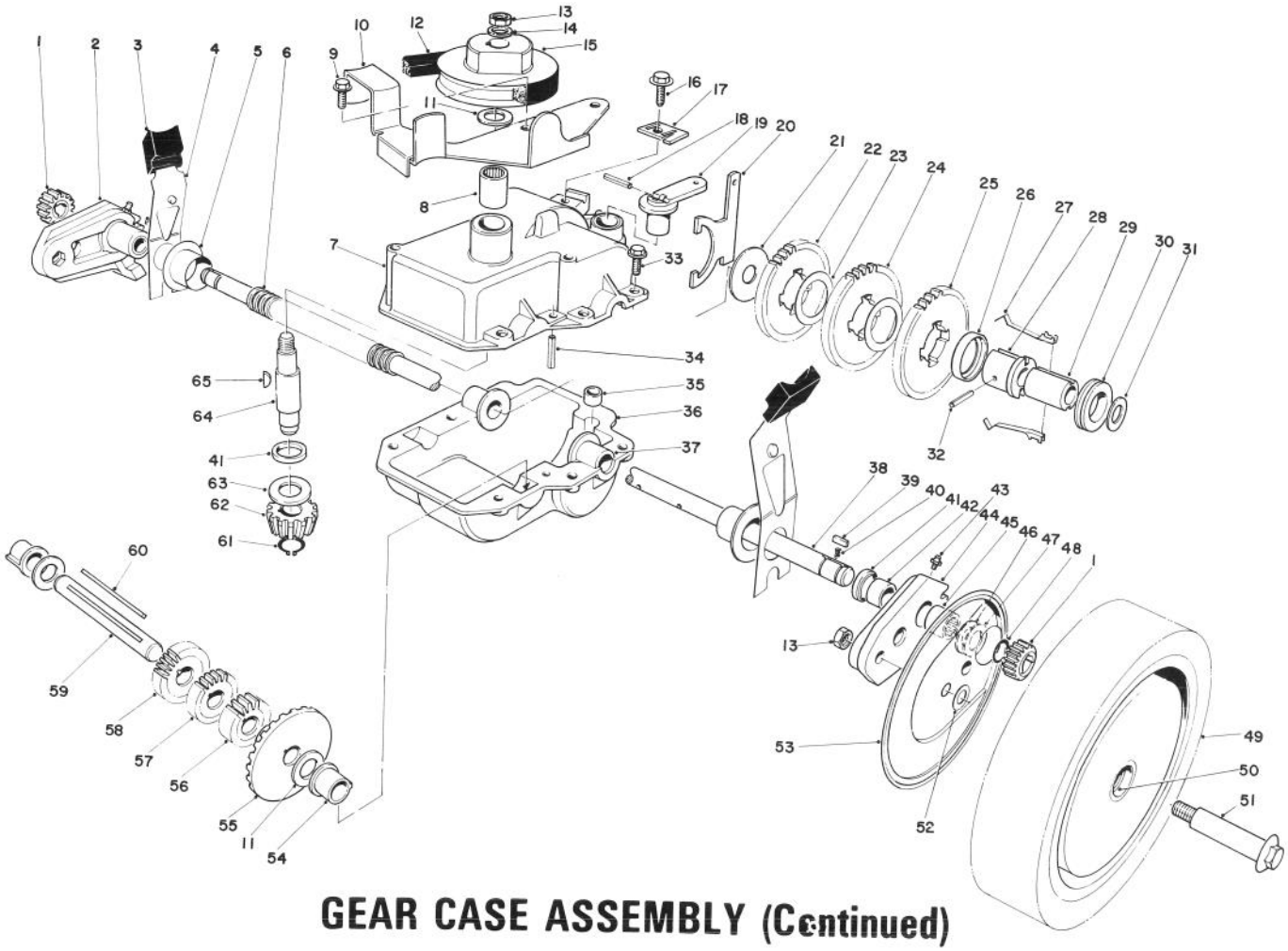

GEAR CASE ASSEMBLY (Continued)

Ref. No.	Part No.	Description	No. Used
45	48-2060	Needle Bearing	2
46	252-73	Washer — Thrust, Inner	2
47	46-2840	Washer — Thrust, Outer	2
48	32151-68	Retaining Ring	4
49	44-0570	Wheel, Tire & Gear Assembly (Incl. Ref. #50)	2
50	27-6250	Bushing — Wheel	4
51	27-6230	Wheel Bolt	2
52	40-1940	Washer — Wheel Bolt	2
53	44-0600	Cover — Wheel	2
54	47-5210	Bushing — Short Shaft	2
55	39-6670	Gear — Bevel	1

Ref. No.	Part No.	Description	No. Used
56	46-3540	Gear — 12 Tooth	1
57	46-3550	Gear — 14 Tooth	1
58	39-6650	Gear — 18 Tooth	1
59	46-9470	Shaft — Intermediate	1
60	39-7841	Key — Square	1
61	32151-57	Ring — Retaining	1
62	39-6660	Pinion — Bevel	1
63	47-2910	Washer — Thrust	1
64	39-6690	Input Shaft	1
65	3257-1	Key — Woodruff	2
*	11-4139	Gear Case Assembly Complete	1

*Not Illustrated

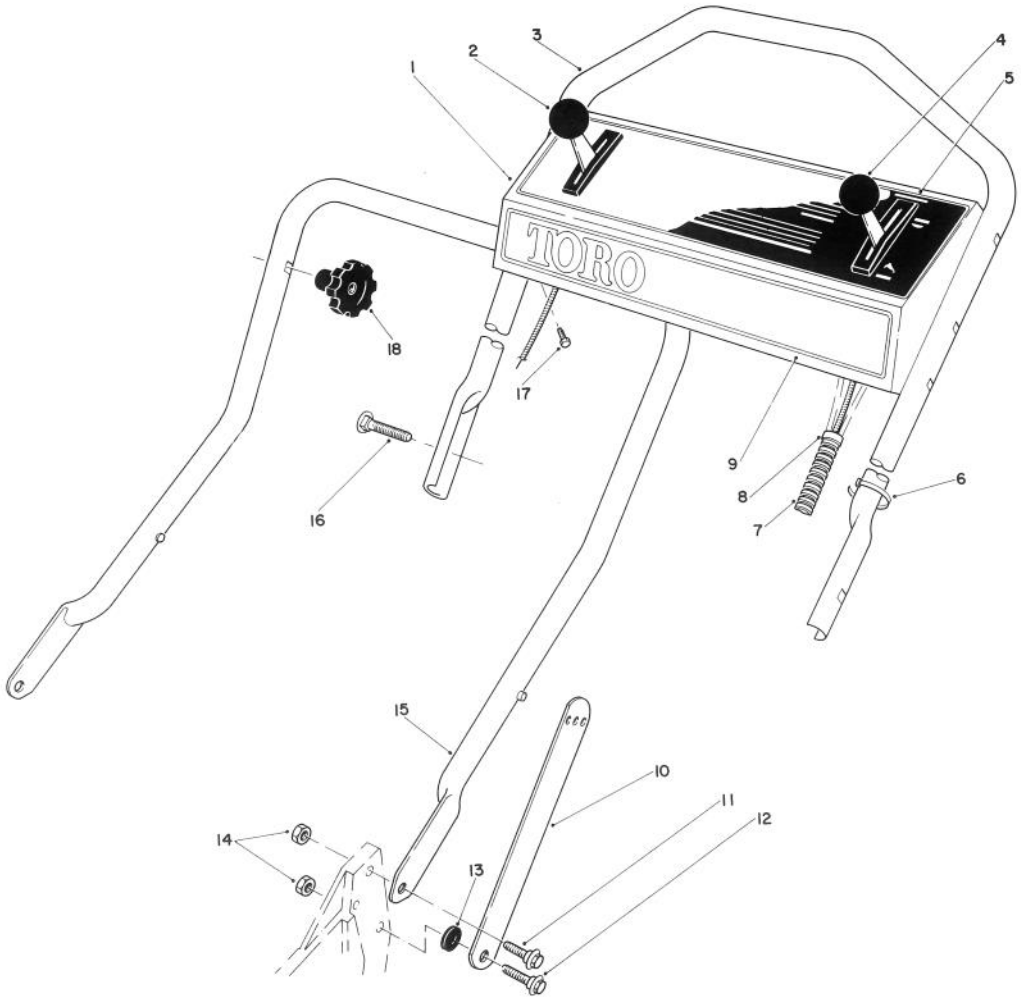

HANDLE ASSEMBLY

Ref. No.	Part No.	Description	No. Used
1	11-4159	Panel — Control (Incl. Ref. #5)	1
2	46-5430	Control — Ground Speed	1
3	46-5411	Handle — Upper	1
4	46-6010	Control — Throttle (Bend Type #1) (Sheath Lg. 53½") (Wire Lg. 2-1/16")	1
5	46-7410	Decal — Instruction Panel	1
6	3290-378	Cable Tie	3
7	46-6440	Cover Control Cables	1
8	2412-50	Clip — Convoluted Tubing	2

Ref. No.	Part No.	Description	No. Used
9	46-7380	Decal — Toro Panel	1
10	43-1370	Latch — Handle	2
11	27-7211	Screw — Shoulder	2
12	27-7210	Screw — Shoulder	2
13	3-3287	Spacer — Handle Latch	2
14	3296-47	Nut — Lock	4
15	43-1360	Lower Handle Assembly	1
16	17-9421	Screw — Handle	2
17	32104-76	Screw — Self Tapping Slotted	3
18	19-4050	Knob — Handle Release	2

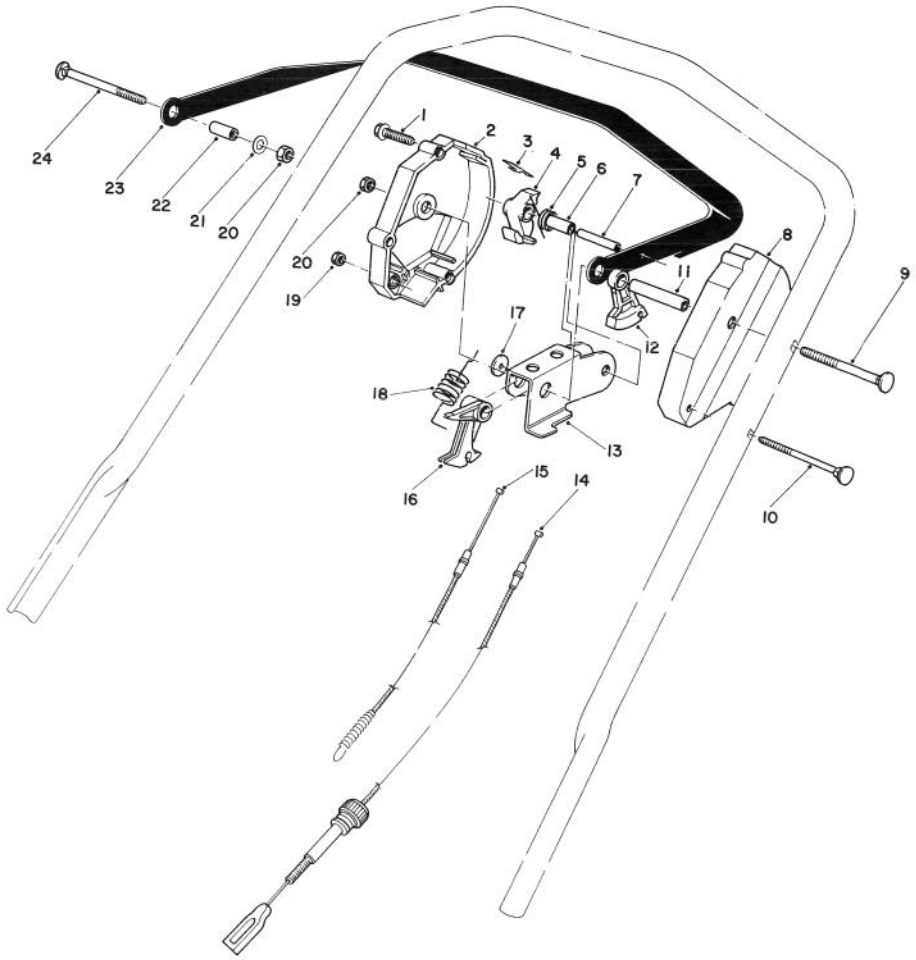

TRACTION CONTROL ASSEMBLY

Ref. No.	Part No.	Description	No. Used
1	46-7040	Screw — Thread Forming Hex Washer Hd.	3
2	46-5450	Housing Control R.H.	1
3	46-5570	Spring — Leaf	1
4	46-5530	Hook — Control	1
5	46-5510	Spring — Torsion	1
6	46-5550	Bushing B.M.	1
7	32121-9	Pin — Coil	1
8	46-5460	Housing — Control L.H.	1
9	17-9422	Screw — Handle	1
10	46-6431	Screw — Handle	1
11	46-5590	Spacer	1
12	46-5520	Lever — Traction	1

Ref. No.	Part No.	Description	No. Used
13	46-5490	Rocker	1
14	46-5480	Cable — Traction	1
15	46-5470	Cable — Clutch	1
16	46-5540	Lever Cable	1
17	46-5600	Washer — Nylon	1
18	46-5500	Spring — Extension	1
19	3296-42	Locknut	1
20	3296-47	Locknut	2
21	3256-23	Washer — Plain	1
22	46-5580	Spacer P.M.	1
23	46-5560	Control Bar Assembly	1
24	17-9421	Screw — Handle	1

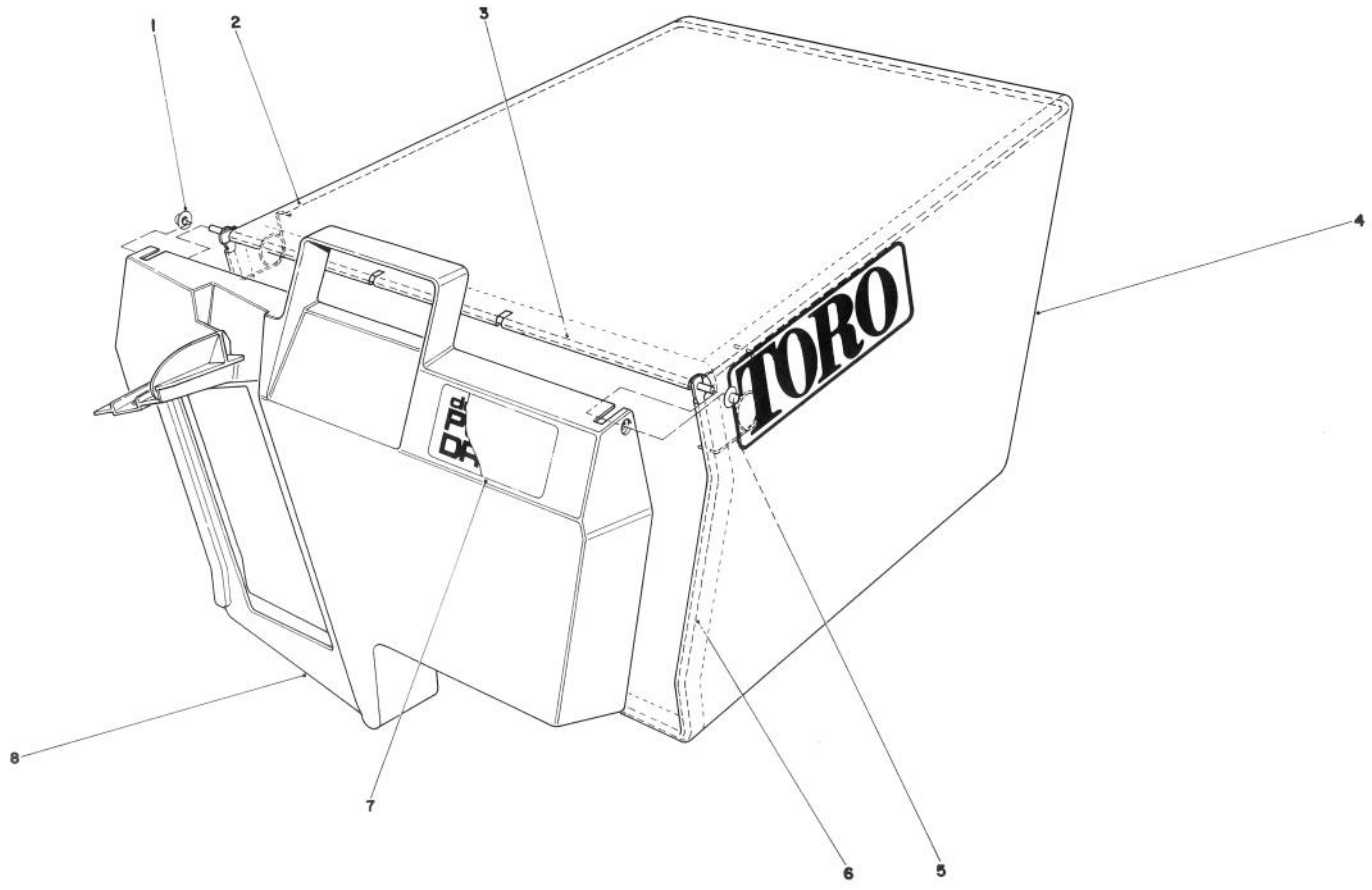

GRASS BAG ASSEMBLY NO. 11-0189

Ref. No.	Part No.	Description	No. Used
1	3290-422	Push Nut	2
2	42-4030	Bag Frame Upper	1
3	33-4820	Hinge Bag Door	1
4	8-2759	Grass Bag	1

Ref. No.	Part No.	Description	No. Used
5	36-6910	Spring	2
6	42-4020	Frame Bag	1
7	40-2240	Decal — Bag Door	1
8	37-1390	Door Grass Bag	1

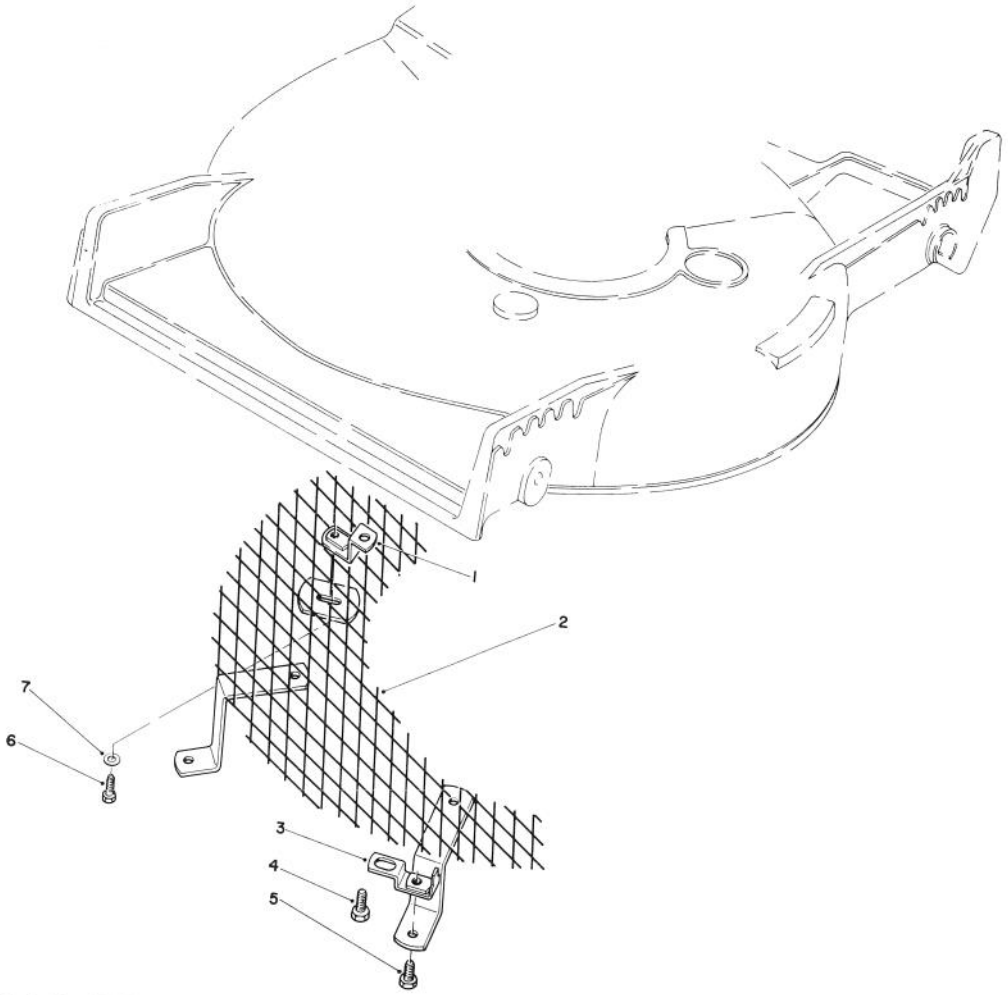

LEAF SHREDDER KIT MODEL NO. 59157 (Optional)

Ref. No.	Part No.	Description	No. Used
1	47-6260	Bracket	1
2	47-6230	Screen	1
3	46-4880	Mounting Bracket	2
4	32144-11	Screw — Self Tapping	2

Ref. No.	Part No.	Description	Ref. No.
5	321-3	Capscrew, Hex Hd.	2
6	321-5	Capscrew, Hex Hd.	1
7	3256-1	Washer	1

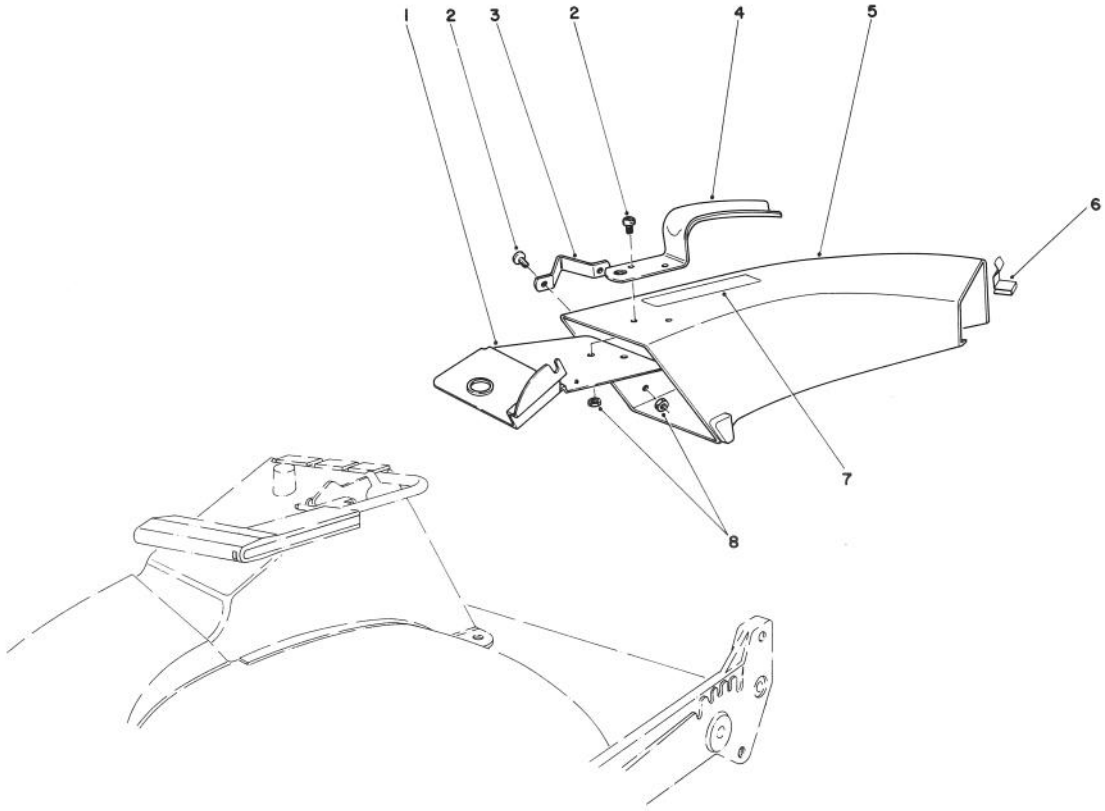

SIDE DISCHARGE CHUTE MODEL NO. 59108 (Optional)

Ref. No.	Part No.	Description	No. Used
1	44-2330	Plate — Discharge Chute	1
2	3251-3	Screw	4
3	46-6580	Bracket	1
4	42-1340	Handle — Grass Chute	1

Ref. No.	Part No.	Description	No. Used
5†		Chute Assembly	1
6	3290-439	Clip	1
7	39-9120	Decal — Caution	1
8	3296-12	Locknut	4

†Order Chute Assembly Model No. 59108.

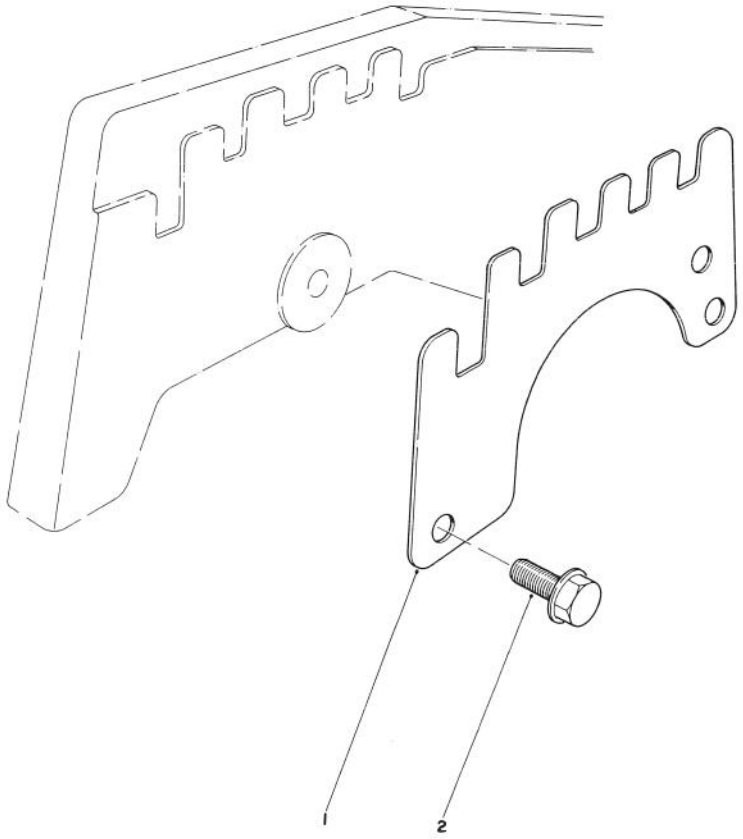

WEAR PLATE KIT NO. 44-5530 (Optional)

Ref. No.	Part No.	Description	No. Used
1	43-5050	Plate — Wear	4

Ref. No.	Part No.	Description	No. Used
2	12-3270	Screw — Thread Forming	8

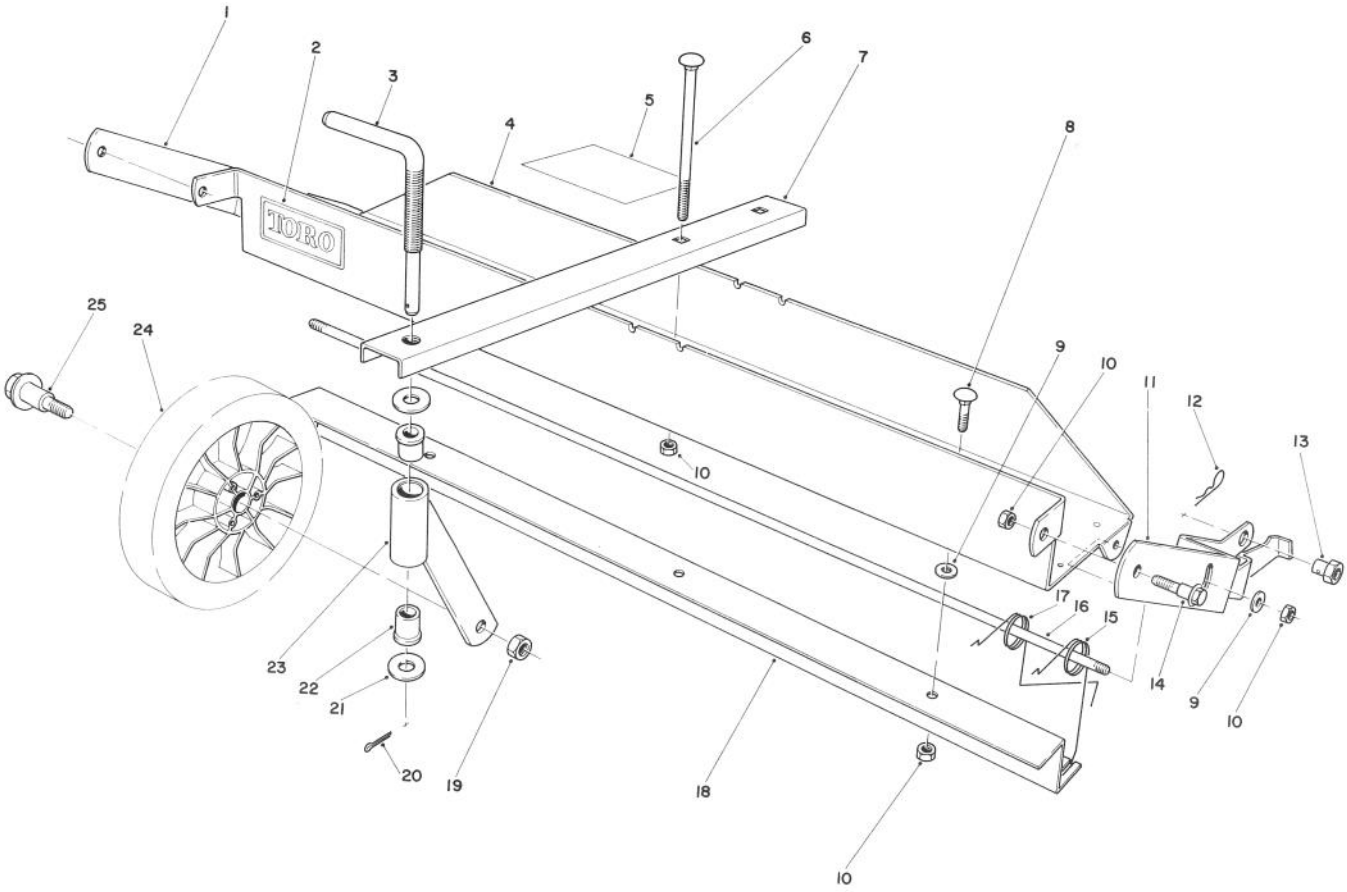

DETHATCHER KIT MODEL NO. 59126 (Optional)

Ref. No.	Part No.	Description	No. Used
1	47-6030	Frame Mount — R.H.	1
2	44-0810	Decal — Toro	1
3	47-6120	Rod — Castor Adjust	1
4	47-2390	Frame — Main (Incl. Ref. #2)	1
5	47-7500	Decal — Instruction	1
6	3230-13	Carriage Bolt	2
7	47-6090	Castor Frame	1
8	3230-1	Carriage Bolt	3
9	3256-24	Washer — Plain	5
10	32153-3	Locknut	9
11	47-6020	Frame Mount — L.H.	1
12	3290-255	Hairpin Cotter	2
13	47-6130	Pivot Nut	2

Ref. No.	Part No.	Description	No. Used
14	19-1470	Screw — Shoulder	2
15	47-6040	Spring — Dethatcher	6
16	47-6050	Rod — Spring Support	1
17	47-6041	Spring — Dethatcher	6
18	47-6010	Strap — Spring Guide	1
19	32146-6	Locknut	1
20	3272-11	Cotter Pin	1
21	3256-4	Washer	2
22	47-6110	Bushing — Flange	2
23	47-6060	Castor Tube & Support	1
24	34-0380	Wheel Assembly	1
25	27-6230	Wheel Bolt	1
*	11-5239	Loose parts	1

*Not Illustrated

ENGINE BRIGGS & STRATTON MODEL NO. 110908-1204-01

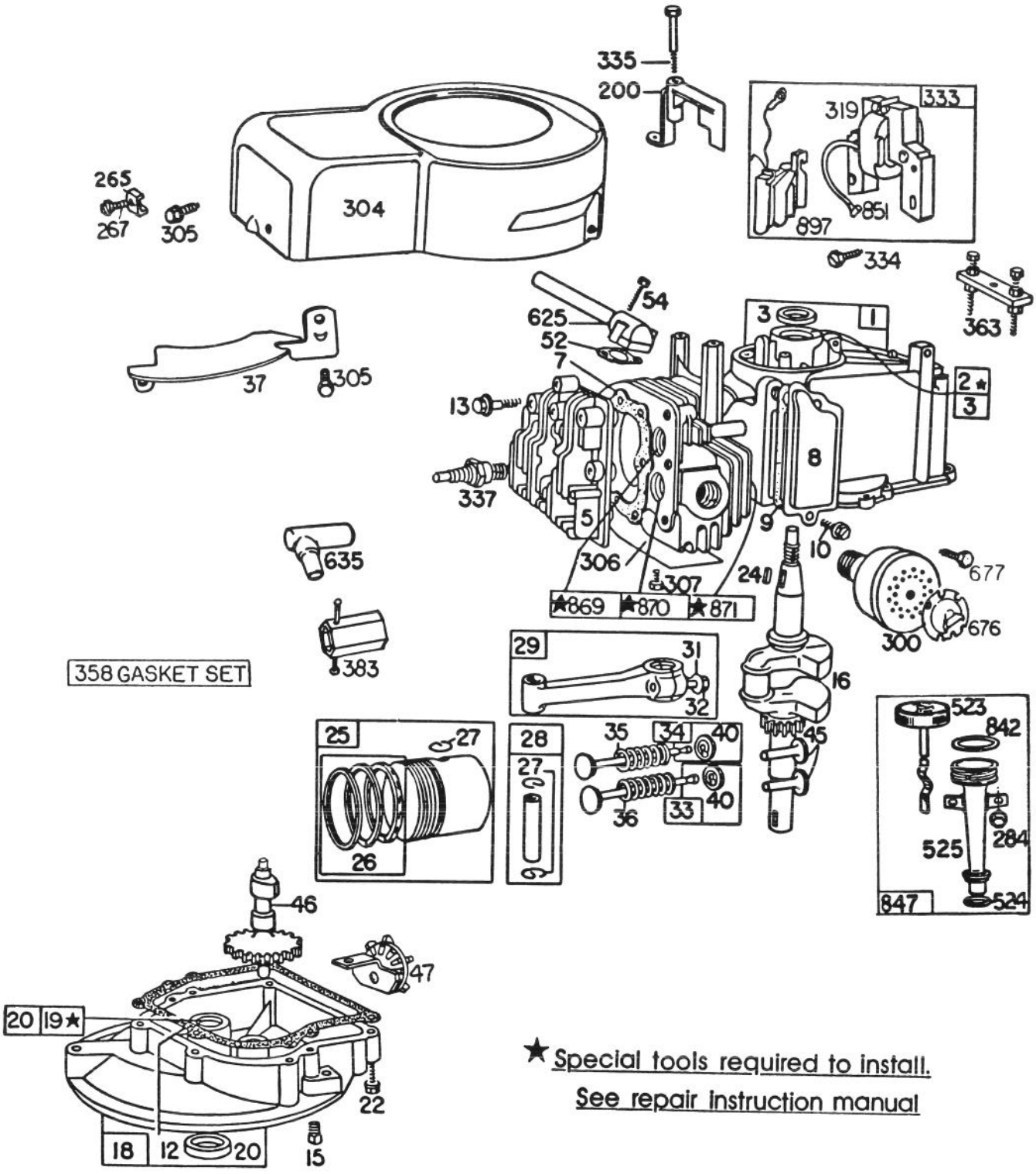

★ Special tools required to install.
See repair instruction manual

ENGINE BRIGGS & STRATTON MODEL NO. 110908-1204-01

Ref. No.	Part No.	Description	No. Used
1	395958	Cylinder Assembly	
2	293708	Bushing — Cylinder Note: Requires special tools for installation.	
3	299819	Seal — Oil	
5	211851	Head — Cylinder	
7	*270836	Gasket — Cylinder Hd.	
8	298383	Breather — Valve Chamber	
9	*270239	Gasket — Valve Cover	
10	93394	Screw — Breather	
12	*270833	Gasket — Crankcase — .015" thick (Standard)	
	*270895	Gasket — Crankcase — .005" thick	
	*270896	Gasket — Crankcase — .009" thick	
13	93111	Screw — Cylinder Hd.	
15	93418	Plug — Oil Drain	
16	261641	Crankshaft	
18	395382	Sump — Oil	
19	293709	Bushing — Oil Sump Note: Requires special tools for installation.	
20	391483	Seal — Oil	
22	93032	Screw — Sump Mtg. Sem	
24	222698	Key — Flywheel	
25	391650	Piston Assy. — Standard	
	391651	Piston Assy. — .010" O.S.	
	391652	Piston Assy. — .020" O.S.	
	391653	Piston Assy. — .030" O.S.	
		Piston Ring Sets: Note: For Chrome Piston Ring Set — standard size — order Part No. 392330.	
26	391654	Ring Set — Standard Piston	
	391656	Ring Set — .010" O.S. Piston	
	391658	Ring Set — .020" O.S. Piston	
	391660	Ring Set — .030" O.S. Piston	
27	26026	Lock — Piston Pin	
28	391649	Pin Assembly — Piston — Standard	
	394861	Pin Assembly — Piston — .005" O.S.	
29	391640	Rod Assembly — Connecting Note: For Connecting Rod with .020" undersize Crankpin Bearing — Order No. 393710.	
31	222282	Washer (one for each screw)	

Ref. No.	Part No.	Description	No. Used
32	93670	Screw — Connecting Rod	
33	212004	Valve — Exhaust	
34	261233	Valve — Intake	
35	260552	Spring — Intake Valve	
36	26478	Spring — Exhaust Valve	
37	223150	Guard — Flywheel	
40	93312	Retainer — Valve Spring	
45	261250	Tappet — Valve	
46	395856	Gear — Cam	
47	294652	Oil Slinger Gear and Bracket	
52	*270844	Gasket — Intake Elbow	
54	93485	Screw — Intake Elbow Mtg.	
200	68388	Blade — Governor	
265	22372	Clamp — Casing	
267	93469	Screw — Clamp Mtg.	
284	93984	Screw — Clamp Mtg.	
300	394569	Muffler — Exhaust	
304	396262	Housing — Blower	
305	93559	Screw — Blower Housing Mounting Sem	
306	222394	Shield — Cylinder	
307	93490	Screw — Cylinder	
319	395488	Armature Assy. (Less Trigger Coil)	
333	395489	Armature — Magneto	
334	93381	Screw — Armature Mounting Sem	
335	93435	Screw — Armature and Governor Blade	
337	298809	Plug — Spark (with gasket) 1-1/2" high — (37-42 mm.)	
358	391662	Gasket Set	
363	19069	Puller — Flywheel (Optional Accessory)	
383	89838	Wrench — Spark Plug	
523	391838	Cap with Dipstick — Oil Filler	
524	271485	Seal — Filler Tube	
525	280382	Tube — Oil Filler	
625	391377	Tube — Fuel Intake	
635	66538	Elbow — Spark Plug	
676	393756	Deflector — Muffler	
677	93705	Screw — Muffler Deflector	
842	270920	Seal — Filler Cap	
847	395869	Filler Group — Oil	
851	221798	Terminal — Ignition Cable	
869	210879	Seat — Intake Valve (Standard)	
870	211291	Seat — Exhaust Valve (Std.)	
871	63709	Guide — Exhaust Valve	
897	394970	Trigger Coil	

*Included in Gasket Set — Part No. 391662.

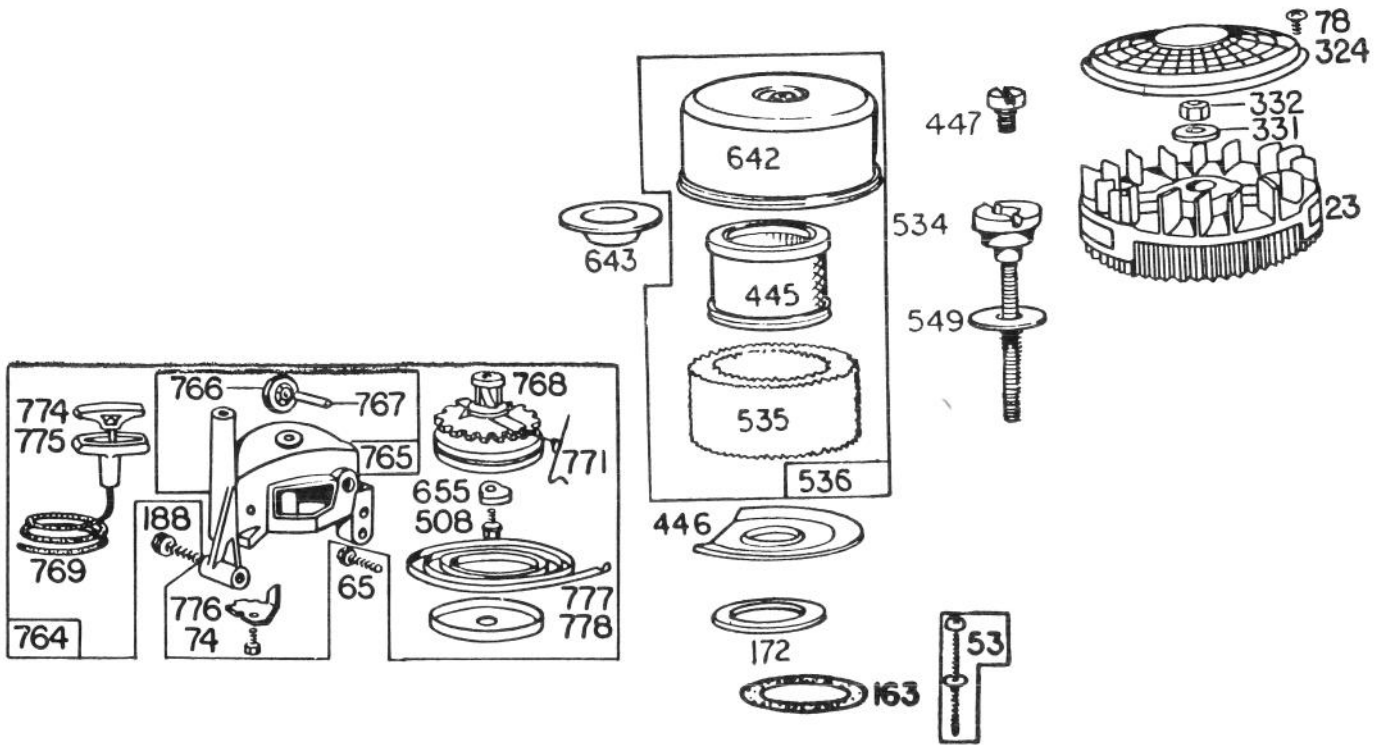

ENGINE BRIGGS & STRATTON MODEL NO. 110908-1204-01

Ref. No.	Part No.	Description	No. Used
23	391488	Flywheel — Magneto	
53	391982	Screw — Tank to Carburetor	
65	93587	Screw — Vertical Pull Starter Mounting	
74	93490	Screw — Sem	
78	93758	Screw — Screen Mtg. (4)	
163	271139	Gasket — Air Cleaner Mtg.	
172	271077	Gasket — Air Cleaner	
188	93585	Screw — Fuel Tank and Starter Mounting	
324	280140	Screen — Rotating	
331	220865	Washer — Flywheel	
332	92284	Nut — Flywheel	
445	392308	Cartridge — Air Cleaner	
446	222844	Base — Air Cleaner	
447	93913	Screw — Cover Mtg.	
508	93158	Screw — Sem	
534	94005	Screw — Air Cleaner (Internal)	
535	270979	Element — Air Cleaner	
536	392368	Cleaner Assy. — Air	

Ref. No.	Part No.	Description	No. Used
549	270978	Washer (Below Internal Screw Head)	
642	222626	Cover — Air Cleaner	
643	222594	Cup — Air Cleaner	
655	222057	Anchor — Spring	
764	396082	Starter Assembly — Vertical Pull	
765	395914	Housing — Vertical Pull Starter	
766	280022	Pulley — Rope (Small)	
767	231048	Pin — Small Rope Pulley	
768	299948	Pulley and Gear Assembly — Starter	
769	66734	Rope — Vertical Pull Starter	
771	299961	Clip — Vertical Pull	
774	280121	Insert — Starter Handle	
775	280036	Grip — Starter Rope	
776	222049	Guide — Rope	
777	390066	Spring — Vertical Pull Starter	
778	280021	Cover — Vertical Pull Starter Pulley	

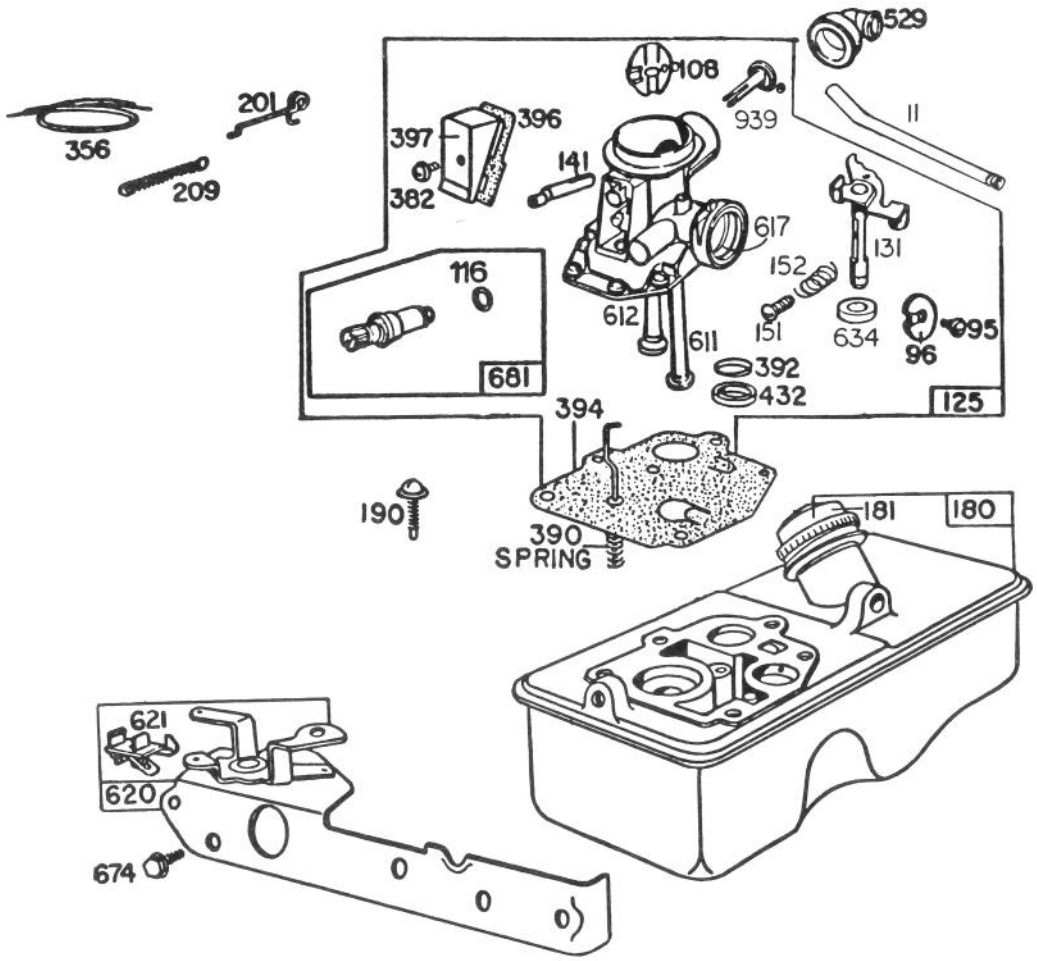

ENGINE BRIGGS & STRATTON MODEL NO. 110908-1204-01

Ref. No.	Part No.	Description	No. Used
11	231292	Tube — Breather	
95	93499	Screw — Throttle Valve Mtg.	
96	211237	Valve — Throttle	
108	280370	Valve — Choke	
116	280203	O-Ring	
125	395957	Carburetor Assembly	
131	299977	Shaft and Lever — Throttle	
141	68908	Shaft — Choke	
151	93524	Screw — Rd. Hd. — 5-40 x 1/2	
152	260746	Spring — Throttle Adj.	
180	391694	Tank Assembly — Fuel	
181	391494	Cap — Fuel Tank (Chrome)	
190	93440	Screw — Fuel Tank Mtg.	
201	261027	Link — Governor	
209	261034	Spring — Governor (For 2900 to 3100 RPM Top Speed Set — No Load)	
356	298479	Wire — Ground (Cut to 7")	

Ref. No.	Part No.	Description	No. Used
382	93545	Screw — Choke Link Cover	
390	261249	Spring — Diaphragm	
392	260455	Spring — Fuel Pump Diaphragm	
394	391643	Diaphragm — Carburetor	
396	270571	Gasket — Choke Link Cover	
397	211678	Cover — Choke Link	
432	221377	Cap — Spring	
529	280368	Grommet — Breather	
611	297219	Pipe — Fuel (long)	
612	296811	Pipe — Fuel (short)	
617	270344	Seal — Fuel Intake Tube	
620	391442	Plate — Carburetor Control	
621	297472	Switch — Stop	
634	270167	Washer — Throttle Shaft (Felt)	
674	93559	Screw — Tank to Bracket	
681	395508	Needle Valve Kit	
939	395665	Choke Shaft Assy.	

PRODUCT CHANGES

In an effort to make improvements available to TORO owners as quickly as possible, minor changes are incorporated into Toro's products from time to time that do not become immediately shown in the Parts Catalog. If such a change apparently has been made in your unit, which is not reflected in your manual, see your TORO Distributor or his Authorized TORO Service Dealer for information and part numbers.

IDENTIFICATION AND ORDERING

MODEL AND SERIAL NUMBERS

The Mower has two identification numbers: a model number and a serial number. The two numbers are stamped on a decal which is located on the mower housing between the rear wheels. In any correspondence concerning the mower, supply model and serial numbers to assure that correct information and replacement parts are obtained.

To order replacement parts from an Authorized TORO Service Dealer, supply the following information:

1. Model and serial numbers of the mower.
2. Part number, description, and quantity of part(s) desired.

Note: Do not order by reference number if a parts catalog is being used; use the PART NUMBER.

The Toro Promise

A ONE YEAR LIMITED WARRANTY

The Toro Company promises to repair your TORO Product if defective in materials or workmanship. The following time periods from the date of purchase apply:

Residential Product . . . . . 1 Year
Residential Products Used Commercially . . . 45 Days

The costs of parts and labor are included, but the customer pays the transportation costs. Just return any residential product to an Authorized TORO Service Dealer or TORO Distributor.

Should you feel your TORO Product is defective and wish to rely on The Toro Promise, the following procedure is recommended:

1. Contact any Authorized TORO Service Dealer, TORO Master Service Dealer, or TORO Distributor (the Yellow Pages of your telephone directory is a good reference source).
2. He will either instruct you to return the product to him or recommend another Authorized TORO Service outlet which might be more convenient.
3. Bring the product along with your original sales slip, or other evidence of purchase date, to the service dealer.
4. The servicing dealer will inspect the unit, advise you whether the product is defective and, if so, make all repairs necessary to correct the defect without extra charge to you.

If for any reason you are dissatisfied with the dealer's analysis of the defect or the service performed, you may contact us.

Write:

TORO Consumer Service Department
8111 Lyndale Avenue South
Minneapolis, Minnesota 55420

The above remedy of product defects through repair by an Authorized TORO Service Dealer is the purchaser's sole remedy for any defect.

THERE IS NO OTHER EXPRESS WARRANTY. ALL IMPLIED WARRANTIES OF MERCHANTABILITY AND FITNESS FOR USE ARE LIMITED TO THE DURATION OF THE EXPRESS WARRANTY.

Some states do not allow limitations on how long an implied warranty lasts, so the above limitation may not apply to you.

This warranty applies only to parts or components which are defective and does not cover repairs necessary due to normal wear, misuse, accidents, or lack of proper maintenance. Regular, routine maintenance of the unit to keep it in proper operating condition is the responsibility of the owner.

All warranty repairs reimbursable under The Toro Promise must be performed by an Authorized TORO Service Dealer using Toro approved replacement parts.

Repairs or attemped repairs by anyone other than an Authorized TORO Service Account are not reimbursable under The Toro Promise. In addition, these unauthorized repair attempts may result in additional malfunctions, the correction of which is not covered by warranty.

THE TORO COMPANY IS NOT LIABLE FOR INDIRECT, INCIDENTAL OR CONSEQUENTIAL DAMAGES IN CONNECTION WITH THE USE OF THE PRODUCT INCLUDING ANY COST OR EXPENSE OF PROVIDING SUBSTITUTE EQUIPMENT OR SERVICE DURING PERIODS OF MALFUNCTION OR NON-USE.

Some states do not allow the exclusion or limitation of incidental or consequential damages, so the above limitation or exclusion may not apply to you.

This warranty gives you specific legal rights, and you may also have other rights which vary from state to state.

COUNTRIES OTHER THAN THE UNITED STATES OR CANADA

Customers who have purchased TORO products exported from the United States or Canada should contact their TORO Distributor (Dealer) to obtain guarantee policies for your country, province or state. If for any reason you are dissatisfied with your Distributor's service or have difficulty obtaining guarantee information, contact the TORO importer. If all other remedies fail, you may contact us at The Toro Company.

Compliance with Radio Interference Regulations Certified.
Certifie Conforme au Reglement sur le Brouillage Radioelectrique.

MAINTENANCE RECORD

Date	Hours Used	Oil Change	Air Cleaner Service	Lubrication	Winter Storage	Spring Service	Spark Plug Gap

MAINTENANCE RECORD

Date	Hours Used	Oil Change	Air Cleaner Service	Lubrication	Winter Storage	Spring Service	Spark Plug Gap