FORM NO. 92-0258

TORO

MODEL NO. 41410-30001 & UP
MODEL NO. 41020-30001 & UP
MODEL NO. 41120-30001 & UP
MODEL NO. 41021-30001 & UP

SET-UP AND PARTS CATALOG

SKID SPRAYER

SAFETY INSTRUCTIONS

⚠ DANGER

TIP OVER OF TRANSPORT VEHICLE CAN CAUSE SERIOUS INJURY OR DEATH.

USE OF THIS SKID SPRAYER ON SOME TRANSPORT VEHICLES CAN CAUSE THE VEHICLE TO BECOME UNSTABLE.

USE EXTREME CAUTION ON HILLS AND SLOPES.

READ AND UNDERSTAND THE SAFETY INSTRUCTIONS BEFORE OPERATING THIS MACHINE.

- Never exceed towing or hauling vehicle's payload capacity.
- Never exceed 20 MPH towing speed. Not for use on highway.
- Place the major load forward of hauling vehicle's rear axle and centered from side to side.
- Never operate on steep slopes.
- Move up and down hills, never across the face.
- Never stop or start suddenly or make sharp turns, especially on hills.
- Never drive close to a ditch, creek or drop-off; stay alert for holes in the terrain and other hidden hazards.
- Read and understand the Operator's Manual before operating this machine.

Replacement manual available by sending complete model number to:

HAHN, INC.
1625 N. Garvin Street
Evansville, IN 47711

Refer to the illustrated Parts Catalog for the details of parts used in assembling the SKID SPRAYER.

Remove the Sprayer Skid from it's shipping skid. For ease of handling, while connecting the Hoses to the Tank, disconnect the 1" x 53" Suction Hose and the 1/2" x 45" Agitator Hose at their respective Quick Couplers. See FIG. 1.

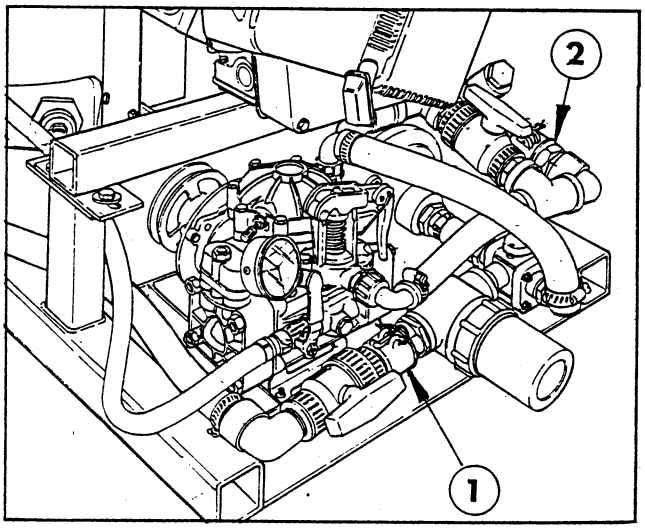

FIG. 1

1. Suction Line Quick Coupler
2. Agitator Line Quick Coupler

TANK ASSEMBLY:

1. Cut the shipping straps and remove the Spray Tank and Saddle Assembly from the shipping skid.

2. Remove the two screws holding the Heat Shield to the Tank Saddle and discard the Heat Shield.

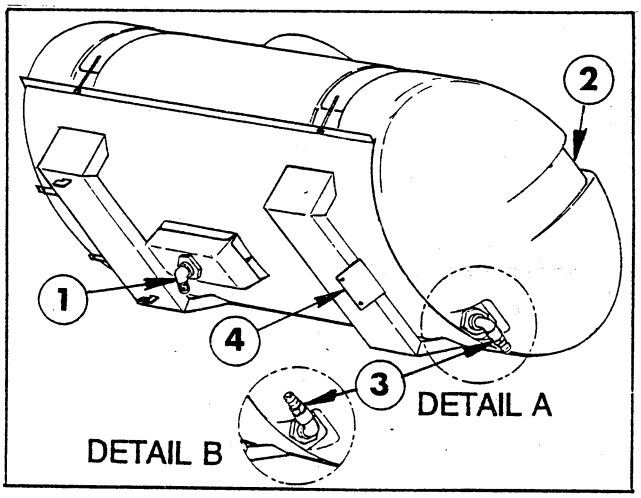

FIG. 2

1. Barbed Elbow (Suction Line)
2. Spill-way
3. Elbow & Quick Coupler (Overflow)
4. Mounting Member

©The Toro Company-1993

3. Apply thread sealer and install the 90° barbed elbow into the bottom of the Tank. See FIG. 2. **IMPORTANT!** Position the barbed elbow as shown, so that it will angle toward the High Pressure Pump, after the Tank is installed on the Skid Frame.

4. Apply thread sealer and assemble the 90° St. elbow to the male Quick Coupler. Install the elbow into the fitting at the spill-way end of the Tank, so that it angles toward the outside of the Tank as shown in FIG. 2.

NOTE: If the Skid Sprayer is to be installed on a Trailer, (as shown in FIG. 3), install the Elbow and Quick Coupler in the Tank as shown in Detail "A". If the Skid Sprayer is to be installed on a Transport Vehicle (as shown in FIG. 4), install the Elbow and Quick Coupler as shown in Detail "B".

5. Loosen the hose clamp on the Suction Hose and use it to secure the Hose to the barbed elbow at the bottom of the Tank.

6. Loosen the hose clamp on the Agitator Hose and use it to secure the Agitator Hose to the barbed elbow in the end of the Tank. (Opposite the spill-way.)

7. Mount the Tank and Saddle Assembly on the Sprayer Skid. Secure it to the Skid frame with two 5/8" x 1-1/2" hex hd cap screws and hex nuts through the mounting member of the Saddle Assembly.

8. Re-connect the Suction and Agitator Hose at their respective Quick Couplers as shown in FIG. 1, page 1.

BOOM ASSEMBLY (TRAILER PACKAGE):

If the Skid Sprayer is to be equipped with the optional Trailer Package (Model No. 41415), mount the Boom as shown in FIG. 3.

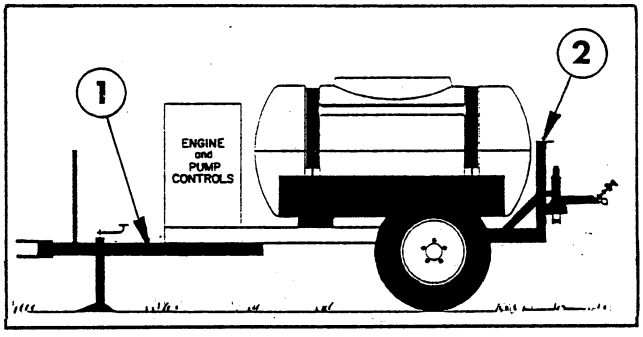

FIG. 3

1. Trailer Package
2. Boom Mount

BOOM ASSEMBLY (TRANSPORT VEHICLE):

The distance between the vehicle bed's mounting surface to the ground level, will vary with each transport vehicle.

a. If this distance is 24" or less on your vehicle, install the Boom Mounts in the **upright** position. See FIG. 4.

b. If this distance is more than 24" on your vehicle, install the Boom Mounts in the **inverted** position.

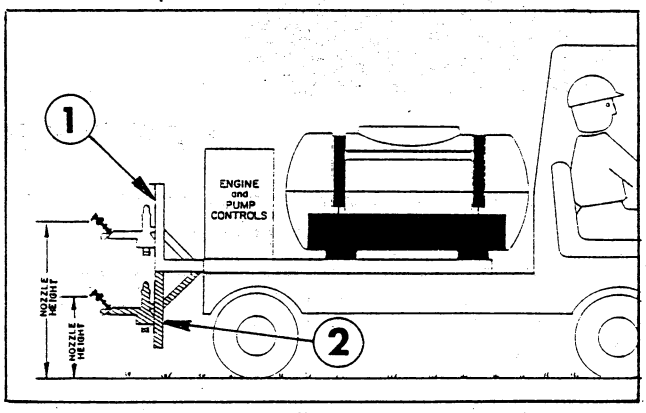

FIG. 4

1. Boom Mount (Upright)
2. Boom Mount (Inverted)

NOTE: Note the position of the angle member of the Boom Mount Assemblies, in relation to the tube member. They must be positioned as shown, for the mounting of the Cross Support Angle. See FIG. 5.

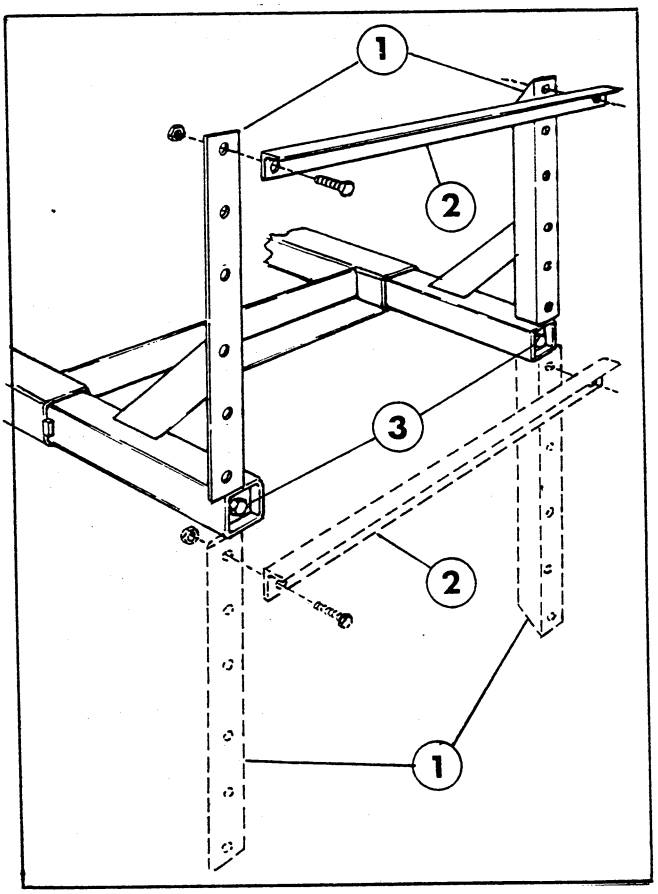

FIG. 5

1. Boom Support Assy.
2. Cross Support Angle
3. Wedge Screw

Install the Main Frame Tube so the nozzles are 22 to 32 inches above the ground.

1. Position the Cross Support Angle and attach it to the Boom Mount Assemblies with two 1/2" x 1-1/4" hex hd cap screws, and lock nuts.

2. Position the Spacer Tubes between the Boom Mount uprights and the lugs on the Main Frame Tube. Use two 1/2"x 4" hex hd cap screws and lock nuts to secure the Main Frame Tube to the uprights. See FIG. 6.

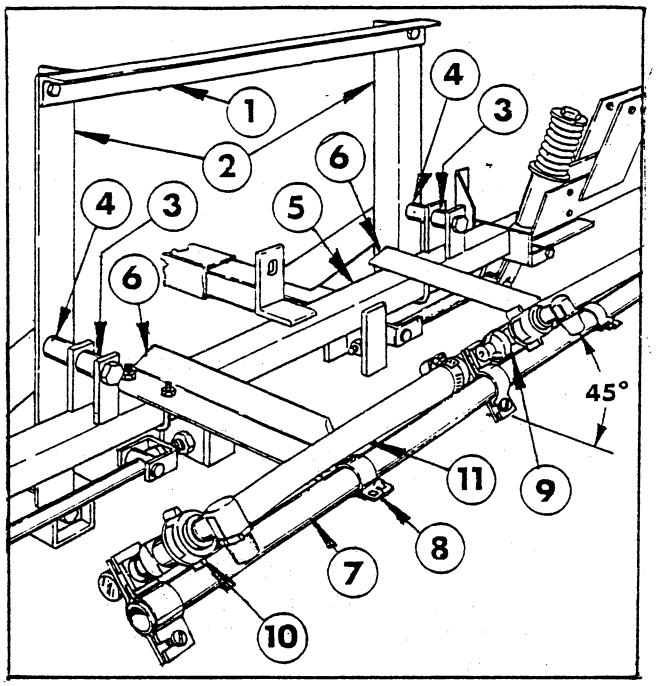

FIG. 6

1. Cross Support Angle
2. Boom Mount Assy.
3. Spacer Tube, 1" lg.
4. Spacer Tube, 1-1/4" lg.
5. Main Frame Tube
6. Center Boom Angle
7. Center Boom Pipe
8. Boom Clamp
9. Triple Barb Nozzle
10. Single Barb Nozzle
11. Jumper Hose

3. Use a torque wrench to tighten the long (1/4" x 8") wedge screws which join the Wedges to the tubes. Tighten to 50 ft. lbs.

4. Position the two Center Boom Angles on the Main Frame Tube as shown in FIG. 6 and secure them to the Frame Tube with "U"-bolts and lock nuts.

5. Center and attach the Center Boom Pipe to the Center Boom Angles with two clamps, 3/8"x 1" hex hd cap screws, washers and lock nuts.

6. Loosely attach the triple barb Nozzle Assembly in the approximate center of the Center Boom Pipe. For the most uniform spray coverage, position all Nozzle Assemblies at a 45° angle as shown in FIG. 6. Tighten clamp screw to secure the Nozzle to the Boom Pipe.

7. Loosely attach a single barb Nozzle Assembly to each end of the Center Boom Pipe. Place two hose clamps on the two 3/4" x 19" Jumper Hoses and connect the single barb Nozzles to the triple barb Nozzle. Tighten all fasteners securely.

8. Insert an Extension Boom Pipe into the Pivot Assembly and secure with four 1/4"x 1-1/4" hex hd cap screws and lock nuts. See FIG. 7. Repeat on the opposite side to assemble the other Extension Boom.

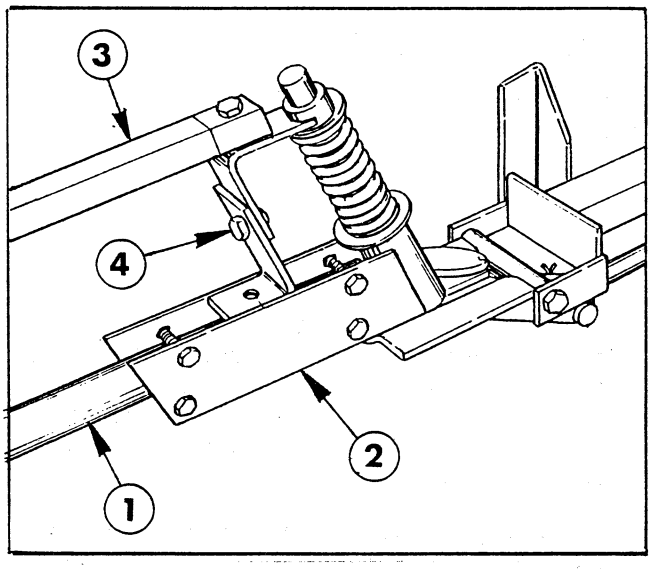

FIG. 7

1. Extension Boom Pipe
2. Pivot Assy.
3. Boom Support Assy.
4. Height Adjustment

9. Attach the Boom Support Assembly to the Hinge Assembly, using a 5/16" x 1-1/2" screw and hex nut. Secure the two plates of the Boom Support Assembly to the Extension Boom Pipe, using two U-bolts and four lock nuts.

10. Assemble the Boom Support Assembly to the other Extension Boom Pipe.

11. Attach three double barb and one single barb Nozzle Assemblies on each Extension Boom Pipe as shown in the illustrated Parts List on page 12. Nozzles are to be spaced on 20 inch centers. Connect the Nozzle Assemblies with the 3/4" x 19" Jumper Hoses. Secure with hose clamps.

CONTROL VALVE/SOLENOID ASSEMBLY:

1. Apply thread sealer and assemble all components of the Valve and Solenoid Assemblies, including the Supply and Overflow Hoses, as shown on page 12.

2. Loosely attach the Control Valve Bracket to the Cross Support with a 5/16" x 3/4" cap screw, flat washer and nut. See FIG. 8.

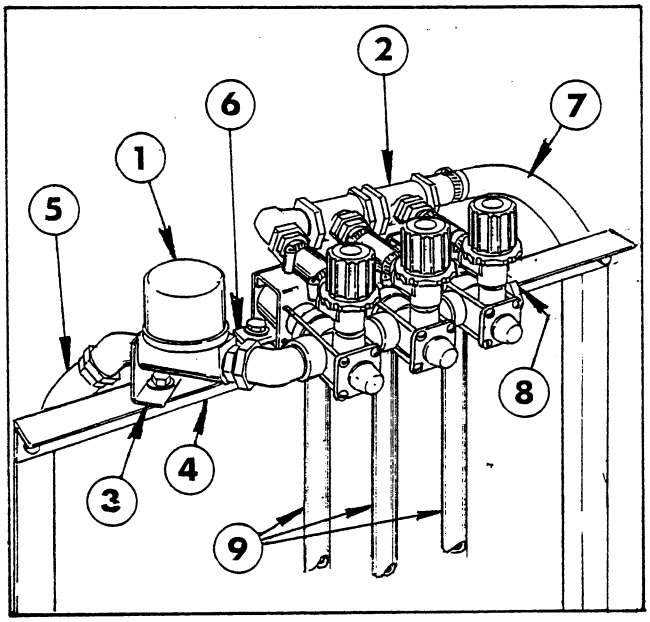

FIG. 8

1. Control Valve
2. Solenoid Assy.
3. Control Valve Brkt.
4. Cross Support Angle
5. Supply Hose
6. Solenoid Mtg. Strap
7. Overflow Hose
8. Gauge Tube Fitting
9. Boom Feeder Hose

3. Slide the Solenoid Mounting Strap into position and mount the complete Control Valve and Solenoid Assembly to the Cross Support as shown in FIG. 8. Use four 5/16" x 1" hex hd cap screws with four washers placed below the screw heads, two between the strap and the Cross Support and four below the Cross Support under the nuts.

4. Connect the Overflow Hose to the Quick Coupler in the spill-way end of the Tank.

Note: If the Boom Frame is installed at the "Tank" end of the Sprayer Skid, the 100" long Overflow Hose will have to be cut to the length required to connect it to the Quick Coupler in the spill-way end of the Tank. Measure very carefully, being sure to allow plenty of Hose for the Quick Coupler connection.

If the Boom Frame is installed at the "Pumps" end of the Sprayer Skid, the Overflow Hose will need to be the full 100" length to reach Quick Coupler in the spill-way end of the Tank.

5. Connect the Supply Hose to the male Quick-Coupler at the Centrifugal Pump.

6. Connect the Boom Feeder Hoses to the barbs in the Solenoid with hose clamps. The two 3/4" x 50" Hoses are to be attached to the left and right Solenoids. The 3/4" x 36" Hose is to be attached to the center Solenoid.

7. Place a hose clamp on the Center Boom Feeder Hose and attach it to the triple barb Nozzle on the Center Boom Pipe.

8. Place a hose clamp on the right and left Boom Feeder Hoses and attach them to the double barb Nozzles on the right and left Extension Boom Pipes.

FILL THE TANK WITH CLEAN WATER AND CHECK FOR ANY LEAKS.

CONTROLS:

1. Attach the two Magnets to the bottom of the Sprayer Control Box' Mounting Bracket with two 1/4" x 5/8" hex hd. cap screws, lock washers and hex nuts.

The Magnets used to mount the Sprayer and the Sprayer Accessory Control Boxes must be attached to a metal surface. If such a surface is not available, a metal mounting bracket will have to be fabricated.

The Sprayer Accessory Control Box is used only when the Foam Marker and/or the Electric Boom Lift Kits are added to the Skid Sprayer. Both of these accessories have their own Set-Up Instructions, which are included with the unit.

2. Determine the most convenient location for mounting the Sprayer Control Box, as that will effect the point where the red and black wires of the Wiring Harness will be connected to the power source.

If necessary, the red and black battery wires can be pulled from the split conduit to bring them closer to your Battery. Measure very carefully, being sure to allow plenty of wire for the connections, and cut off any excess wire.

3. Crimp the ring terminals to the stripped ends of the red and black wires. Connect the red wire to the Battery's positive (+) post. Connect the black wire to the negative (-) post.

4. Connect the plugs on the 12 ft. Extension Cable to the cables from the Control Box and the Control Valve. Route the Cables along the Skid Frame and secure with the plastic Sta-Straps provided.

5. Make connections to the electric solenoid valves (black wire on left solenoid, brown on middle solenoid, blue on right solenoid an a white jumper on all three solenoids. See page 23.

6. Assemble the 1/4" male fitting to the reducer bushing in the end of the Solenoid Valve and connect the Gauge Tube.

PUMP SYSTEM:

⚠ WARNING

OPERATING THE SKID SPRAYER WITHOUT SAFETY SHIELDS IN PLACE CAN CAUSE PERSONAL INJURY.

HAVE ALL SAFETY SHIELDS IN PLACE BEFORE OPERATION!

Determine which of the two Pump systems you will be using for your particular spraying operation.

FOR HIGH VOLUME SPRAYING (i.e. Boom Spraying) **use the Centrifugal Pump system.** Install the Drive Belt on the Engine and Centrifugal Pump Pulleys as shown in FIG. 9.

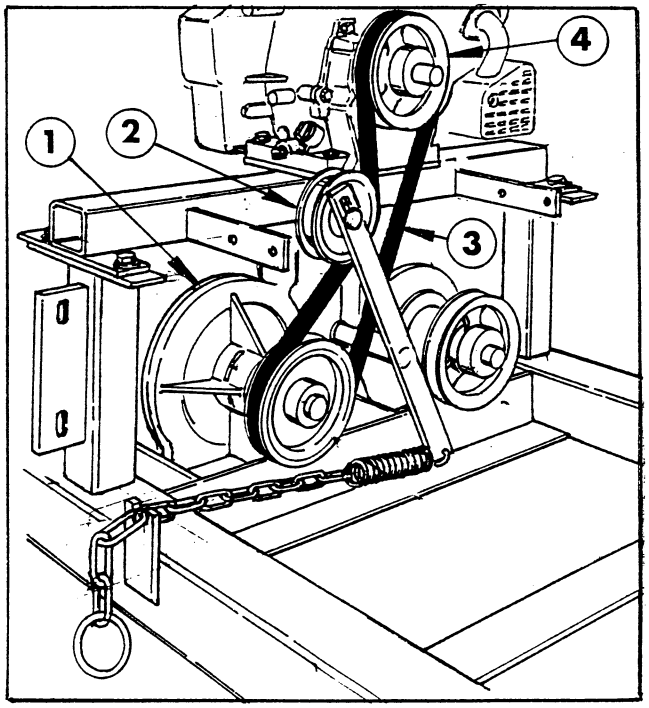

FIG. 9

1. Centrifugal Pump (High Volume)
2. Idler Pulley
3. Drive Belt
4. Engine Pulley

NOTE: For the sake of clarity, the safety shields have been removed in this illustration. **NEVER** operate the Sprayer with the Belt Cover or the Belt Shield removed!

FOR HIGH PRESSURE SPRAYING (i.e. Hand Gun Spraying) **use the Diaphragm Pump System.** Install the Drive Belt on the Engine and Diaphragm Pump Pulleys as shown in FIG. 10.

⚠ DANGER

FAILURE TO USE THE PROPER HIGH PRESSURE EQUIPMENT CAN CAUSE PERSONAL INJURY.

NEVER USE THIS DIAPHRAGM PUMP WITH A SPRAY HOSE AND/OR A SPRAY GUN THAT IS RATED AT LESS THAN 600 P.S.I.

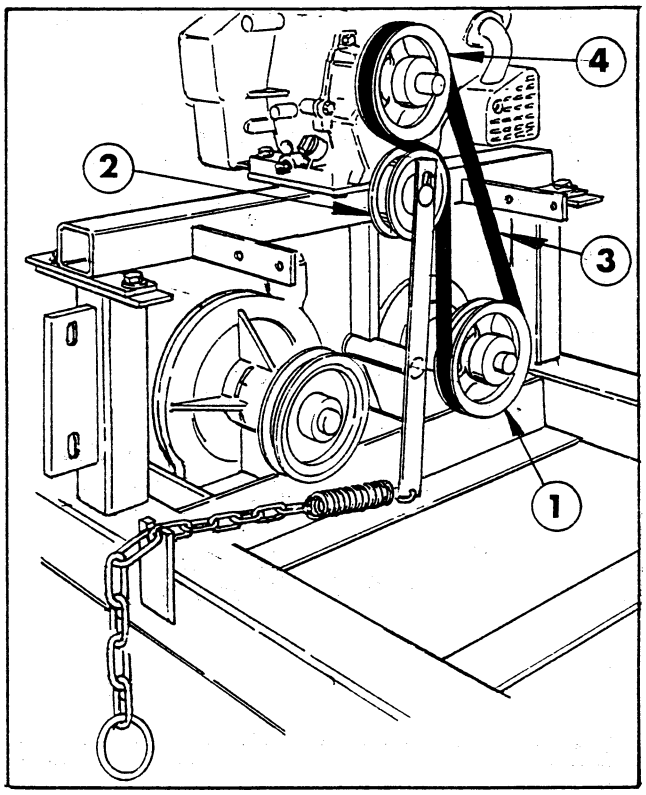

FIG. 10

1. Diaphragm Pump (High Pressure)
2. Idler Pulley
3. Drive Belt
4. Engine Pulley

NOTE: For the sake of clarity, the safety shields have been removed in this illustration. **NEVER** operate the Sprayer with the Belt Cover or the Belt Shield removed!

INSTALLING THE SKID SPRAYER ON A TRANSPORT VEHICLE:

Make sure that the weight of the Skid Sprayer and any optional equipment that may be added, is within the weight capacity of your transport vehicle. See the chart below for the weights of this unit and it's optional equipment.

Skid Sprayer (Full Tank)	1,973 lbs.
Foam Marker	30 lbs.
Electric Boom	23 lbs.
Manual Hose Reel	150 lbs.

1. Position the Skid Sprayer with it's Tank as far forward toward the operator's position as possible.

2. Make sure the weight load is centered from side to side within the vehicle bed.

3. Remove one of the bolts which hold the three square tube spacers to the Skid.

4. Using the bolt hole as a template, center punch the vehicle bed and replace the bolt. Repeat the procedure at all six hole locations. See FIG. 11.

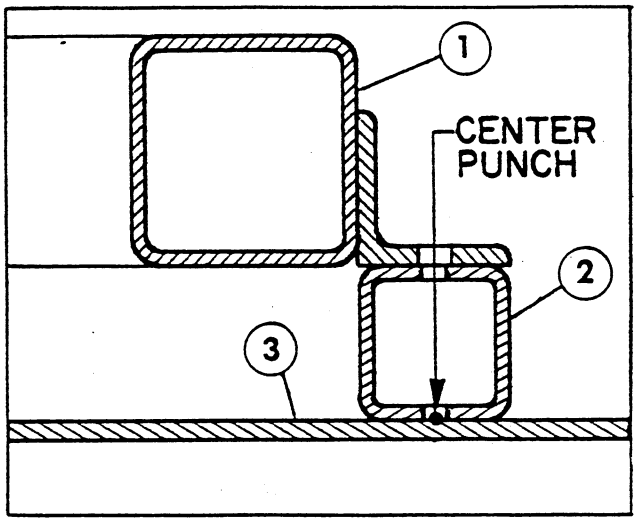

FIG. 11

1. Sprayer Skid
2. Spacer Tube
3. Transport Vehicle Bed

5. Drill six 7/16 dia. holes in the vehicle bed and secure the Skid to the vehicle bed with 3/8" NC bolts of a length determined by the material thickness of the vehicle bed.

FINDING THE CORRECT NOZZLE SIZE

G.P.M. (Per Nozzle) = $\frac{\text{G.P.A. x M.P.H. x W*}}{5940}$ *Example:* .81 GPM = $\frac{\text{80 GPA x 3 MPH x 20"}}{5940}$

*W = Nozzle spacing in inches.

TORO Part No.	Nozzle Number Color–Code	Pressure (PSIG)	Capacity 1–Nozzle (GPM)	APPLICATION RATES FOR NOZZLES 20" SPACING							
				GALLONS PER ACRE				GALLONS PER 1000 SQ. FT.			
				3 MPH	4 MPH	5 MPH	6 MPH	3 .64	4 MPH	5 MPH	6 MPH
92–3977	RA–4	20	.28	28	21	17	14	.78	.48	.39	.32
	120°	30	.35	34	26	20	17	.92	.60	.46	.39
	¼"	40	.40	40	30	24	20	.92	.69	.55	.46
	Yellow	50	.45	44	33	27	22	1.01	.76	.62	.51
43082	RA–5	20	.36	35	26	21	17.5	.80	.60	.48	.40
	120°	30	.44	42	32	26	21	.96	.73	.60	.48
	¼"	40	.50	50	37	30	25	1.15	.85	.69	.57
	Dk. Blue	50	.56	56	42	33	28	1.29	.96	.76	.64
41088	RA–6	20	.43	42	32	25	21	.96	.73	.57	.48
	120°	30	.52	52	39	31	26	1.19	.90	.71	.60
	¼"	40	.60	60	45	36	30	1.38	1.03	.83	.69
	Dk. Green	50	.67	66	50	40	33	1.52	1.15	.92	.76
42828	RA–8	20	.57	56	42	34	28	1.29	.96	.78	.64
	120°	30	.70	68	51	41	34	1.56	1.17	.94	.78
	¼"	40	.80	80	59	48	40	1.84	1.35	1.10	.92
	Red	50	.90	88	66	53	44	2.02	1.52	1.22	1.01
40444	RA–10	20	.71	70	53	42	35	1.61	1.22	.96	.80
	120°	30	.87	86	64	51	43	1.97	1.47	1.17	.99
	¼"	40	1.0	100	74	59	50	2.30	1.70	1.35	1.15
	Tan	50	1.1	110	83	66	55	2.53	1.91	1.52	1.26
92–0027	RA–15	20	1.1	106	79	63	53	2.43	1.81	1.45	1.22
	120°	30	1.3	128	96	77	64	2.94	2.20	1.77	1.47
	¼"	40	1.5	148	111	89	74	3.40	2.55	2.04	1.70
	Lt. Blue	50	1.7	166	125	100	83	3.81	2.87	2.30	1.91

CHECKING YOUR CALIBRATION

G.P.A. = $\frac{\text{5940 x G.P.M. (Per Nozzle)}}{\text{M.P.H. x W*}}$ *Example:* 79.2 GPA = $\frac{\text{5940 x .80 GPM}}{\text{3 MPH x 20"}}$

*W = Nozzle spacing in inches.

Conversion from Gallons/Acre to Gallons/1000 Sq. Ft.
GPA ÷ 43.56 = Gallons per 1000 sq. ft.

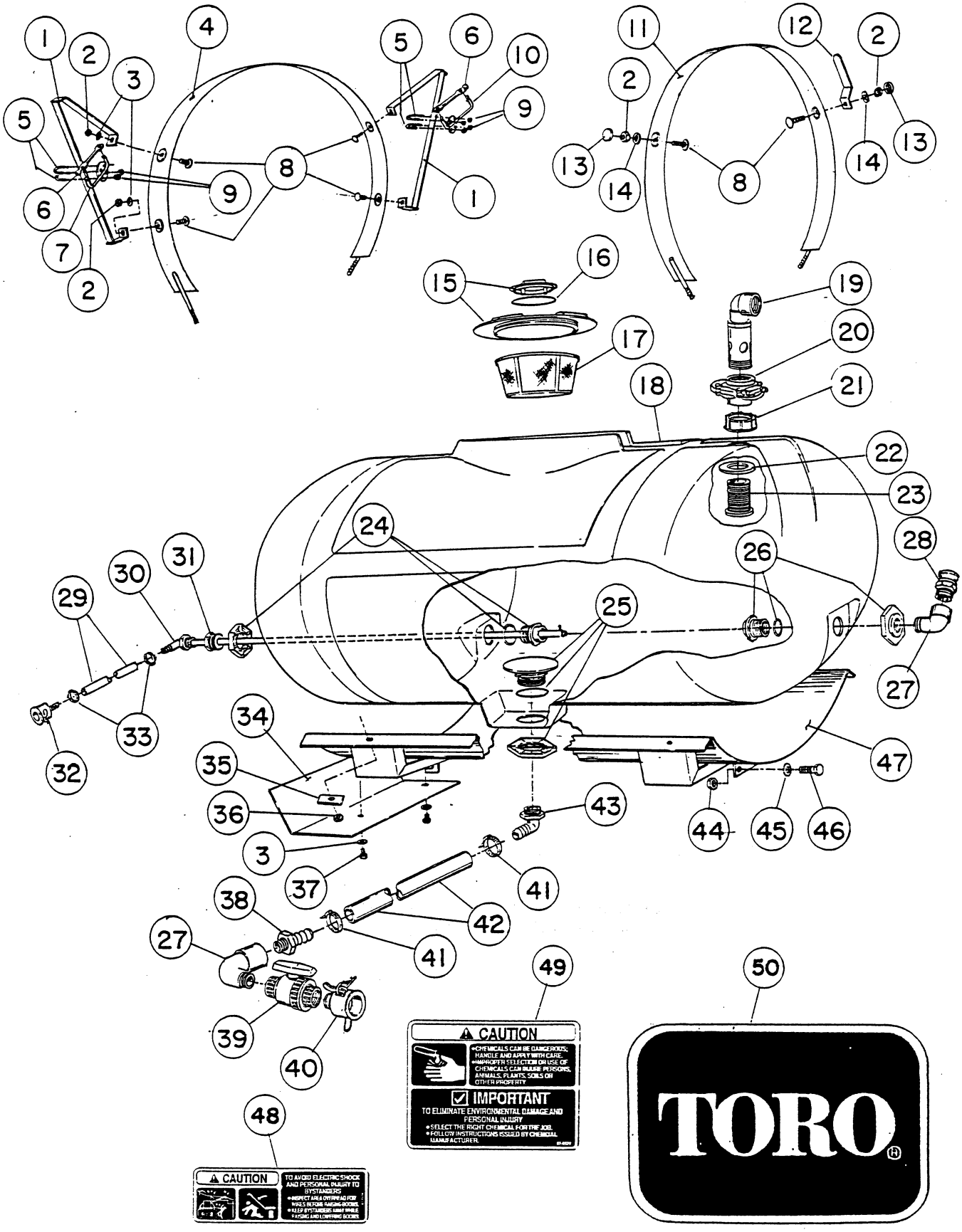
CAUTION
IMPORTANT
TO ELIMINATE ENVIRONMENTAL DAMAGE AND PERSONAL INJURY
CAUTION
TO AVOID ELECTRIC SHOCK AND PERSONAL INJURY TO BYSTANDERS
TORO

TANK

TANK

REF.	PART NO.	DESCRIPTION	QTY.
1	42983	Hold-In Brace Assy	2
2	22-12-AJD	Hex Nut, 5/16 NC	6
3	24-10-BD	Flat Washer, 5/16	8
4	42880	Mounting Band (Front)	2
5	92-0010	U-Bolt, 1/4 NC	4
6	42198	Rubber Hold Down Strap	2
7	42259	Boom Hold-In Assy - L.H.	1
8	25-25-AGD	Carriage Bolt, 5/16 NC x 3/4	6
9	22-11-AJFD	Lock Nut, 1/4 NC	8
10	42316	Boom Hold-In Assy - R.H.	1
11	43013	Mounting Band (Rear)	2
12	40153	Hose Hook	1
13	42452	Protective Cap	2
14	23-10-GD	Lock Washer, 5/16	2
15	42322	Tank Lid (f/w Tank Assy)	1
	92-3765	Vent Cap	1
16	42859	Breather Gasket (f/w Tank Assy)	1
17	42323	Filler Basket - 16" (f/w Tank Assy)	1
18	42879	Tank Assembly - 160 Gals.	1
19	43069	Stand Up Assy	1
20	43064	Knife Valve	1
21	43068	Fly Nut, 2" NPT	1
22	43067	Sealing Washer	1
23	43066	Bulk Head, 2" NPT	1
24	41801	Tank Fitting, 3/4" NPT (f/w Tank Assy)	1
25	41798	Tank Fitting, 1-1/4" NPT (f/w Tank Assy)	1
26	41800	Tank Fitting, 1" NPT (f/w Tank Assy)	1
27	41307	90 St. Elbow, 1" NPT	2
28	40479	Male Qwik Apaptor, 1" MPT	1
	41318	Dust Cap	1
29	92-0245	Agitator Hose, 1/2 I.D. x 45"	1
30	42981	Agitator Tube Assy	1
	42842	Elbow - Agitator Tube (Barbed)	1
31	41969	Reducer Bushing, 3/4" MPT x 1/2" FPT	1
32	40487	Female Qwik Coupler, 1/2" HB	1
33	96609	Hose Clamp	2
34	92-3525	Heat Shield	1
35	43014	Backing Strap	4
36	22-13-AJD	Hex Nut, 3/8 NC	4
37	20-24 AGD	HHCS, 5/16 NC x 3/4"	2
38	92-0012	Hose Barb, 1" MPT X 1" HB	1
39	40020	Ball Valve, 1" NPT	1
40	92-0238	Female Qwik Coupler, 1" MPT	1
41	21146	Hose Clamp	2
42	92-0241	Suction Hose, 1" I.D. x 53"	1
43	42057	90 Elbow, 1 1/4" MPT x 1" HB	1
44	22-15-AJD	Hex Nut, 1/2 NC	2
45	23-13-GD	Lock Washer, 1/2 Med	2
46	20-86-AGD	HHCS, 1/2 NC x 1-1/4	2
47	42878	Tank Saddle Assy	1
48	87-0570	Decal - "Electric Shock"	2
49	87-0520	Decal - "CAUTION - Chemicals"	1
50	66-1210	Decal - "TORO"	2

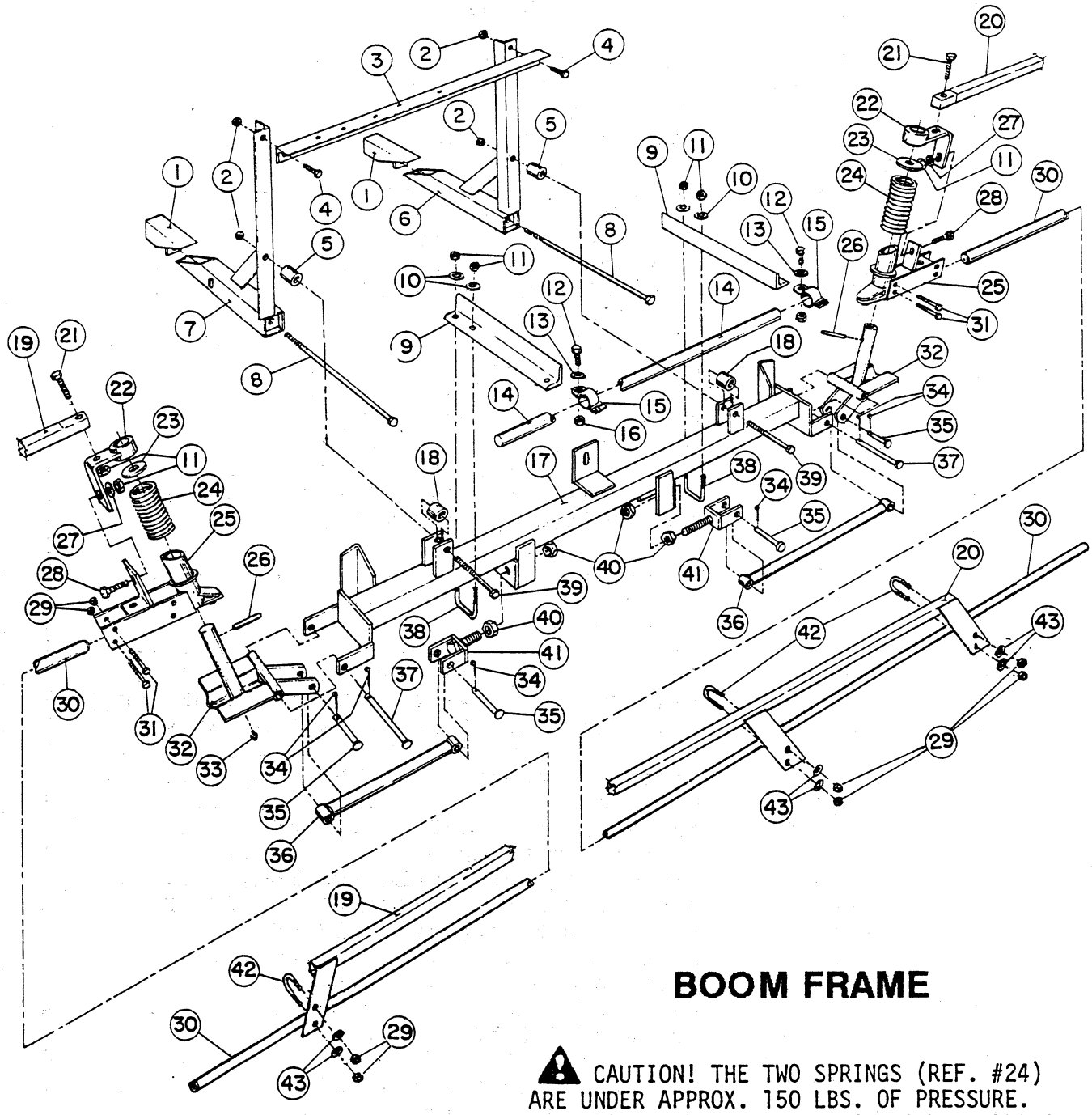

BOOM FRAME

⚠ CAUTION! THE TWO SPRINGS (REF. #24) ARE UNDER APPROX. 150 LBS. OF PRESSURE. BE VERY CAUTIOUS WHEN REMOVING THE SPRING PINS (REF. #26) FOR REMOVAL OF THE SPRINGS.

⚠ CAUTION! THE TWO BOLTS (REF. #8) MUST BE TORQUED TO 50 FT. LBS.

BOOM FRAME

REF.	PART NO.	DESCRIPTION	QTY.
1	42223	Tube Wedge Assy	2
2	22-15-AJFD	Lock Nut, 1/2 NC	4
3	42225	Cross Support Angle	1
4	20-86-AGD	HHCS, 1/2 NC x 1-1/4"	2
5	42258	Spacer Tube, 1-1/4" lg.	2
6	42222	Boom Mount Assy	1
7	42217	Boom Mount Assy	1
8	42199	HHCS, 1/2 NC x 18"	2
9	42234	Center Boom Angle	2
10	24-10-AD	Flat Washer, 5/16	4
11	22-12-AJD	Hex Nut, 5/16 NC	8
12	20-47-AGD	HHCS, 3/8 NC x 1"	2
13	24-11-AD	Flat Washer, 3/8	2
14	40493	Center Boom Pipe	1
15	40494	Clamp Assy	2
16	22-13-AJFD	Lock Nut, 3/8 NC	2
17	42227	Main Frame Tube-Welded Assy	1
18	42257	Spacer Tube, 1" Long	2
19	42711	Boom Support Assy - LH	1
20	42710	Boom Support Assy - RH	1
21	20-28-AGD	HHCS, 5/16 NC x 1-1/2"	2
22	42707	Support Bracket Assy	2
23*	24-18-BD	Flat Washer, 1" S.A.E.	2
24*	42196	Compression Spring	2
25*	42706	Breakaway Pivot Assy	2
26*	29-199-C	Spring Pin, 1/4 x 2"	2
27	24-10-BD	Flat Washer, 5/16 S.A.E.	2
28	25-25-AGD	Carriage Bolt, 5/16 NC x 3/4	2
29	22-11-AJFD	Lock Nut, 1/4 NC	16
30	42282	Extension Boom Pipe Assy	2
31	20-8-AGD	HHCS, 1/4 NC x 1-3/4"	8
32*	42243	Hinge Assy	2
33*	361011	Grease Fitting	2
34	28-18-D	Cotter Pin, 1/8 x 1"	6
35	42195	Clevis Pin, 1/2 x 2"	4
36	42240	Strut Assy	2
37	42194	Clevis Pin, 1/2 x 4-1/2"	2
38	301950	U-Bolt, 5/16 NC	2
39	20-97-AGD	HHCS, 1/2 NC x 4"	2
40	22-17-AJD	Hex Nut, 5/8 NC	4
41	42237	Adjustable Clevis Assy	2
42	92-0010	U-Bolt, 1/4 NC	4
43	24-9-AD	Flat Washer, 1/4	8

* Denotes parts that are available in an assembled unit.
Order #42840 Breakaway Assembly

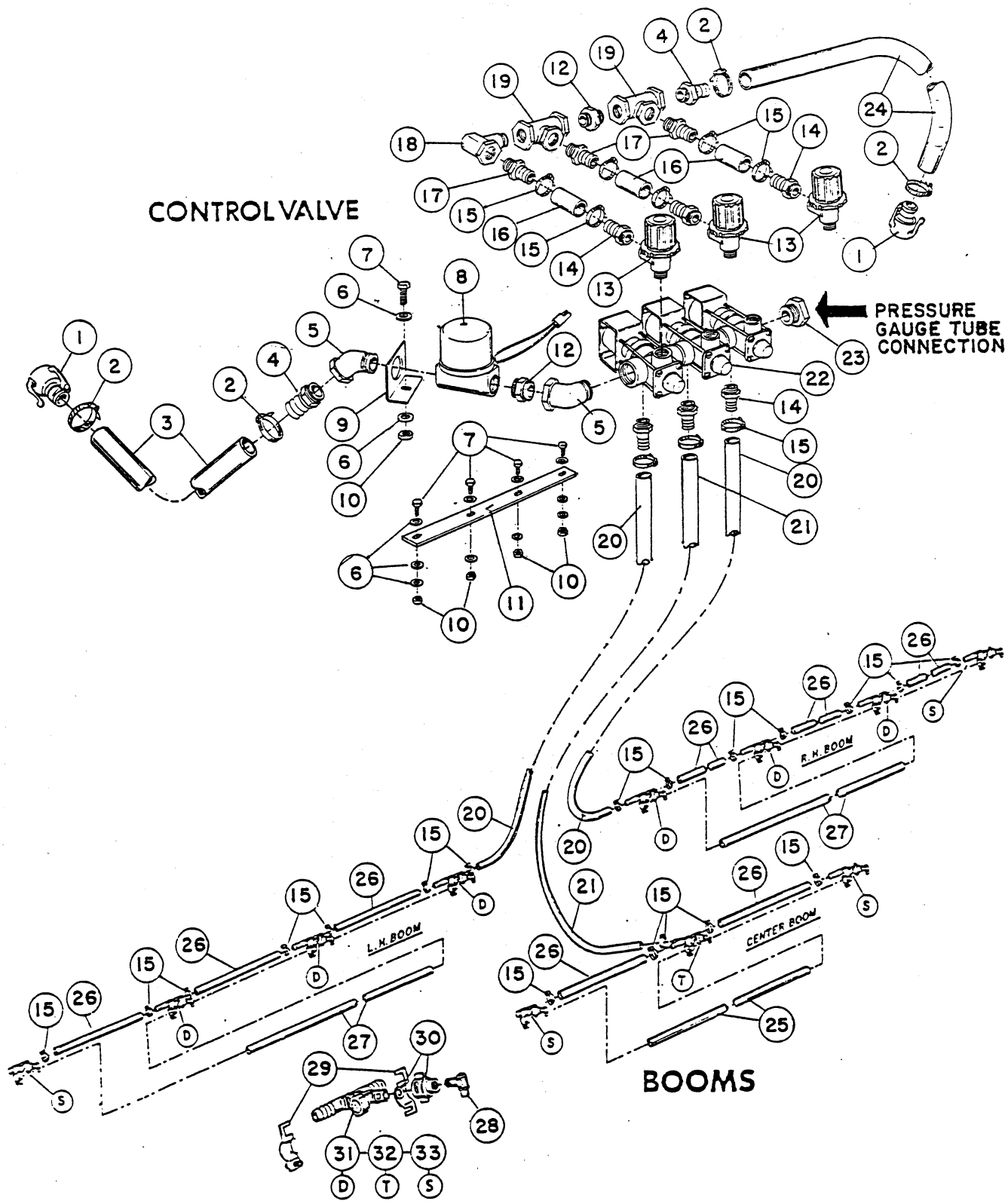
CONTROL VALVE
PRESSURE GAUGE TUBE CONNECTION
L.H. BOOM
R.H. BOOM
CENTER BOOM
BOOMS

CONTROL VALVE & BOOMS

REF.	PART NO.	DESCRIPTION	QTY.
1	40480	Qwik Adapter x 1" HB	2
2	21146	Hose Clamp	4
3	92-0244	Supply Hose, 1" I.D. x 80"	1
4	41730	Hose Barb, 3/4" MPT x 1" H.B.	2
5	42939	45 St. Elbow, 3/4" NPT	2
6	24-10-BD	Flat Washer, 5/16 S.A.E.	12
7	20-26-AGD	HHCS 5/16 NC x 3/4	5
8	42936	Control Valve	1
9	42938	Control Valve Mounting Brkt	1
10	22-12-AJD	Hex Nut, 5/16 NC	5
11	41325	Solenoid Valve Mounting Strap	1
12	41294	Close Nipple, 3/4" NPT	2
13	42872	Throttling Valve	3
14	41313	Hose Barb, 1/2" MPT x 3/4" HB	6
15	92-0045	Hose Clamp	9
16	42944	Connector Hose, 3/4" I.D. x 2-1/2"	3
17	41257	Hose Barb, 3/4" MPT x 3/4" HB	3
18	42940	St. Elbow, 3/4" NPT	1
19	42941	Tee, 3/4 NPT	2
20	41340	Boom Hose, Right & Left	2
21	42274	Boom Hose, Center	1
22	42870	Solenoid By-Pass Valve	1
	42871	Single Solenoid	AR
	42942	Seal Kit for Solenoid	AR
23	41310	Reducer Bushing, 3/4" MPT x 1/4" FPT	1
24	92-3707	Overflow Hose, 1" I.D. x 100"	1
25	40493	Center Boom Pipe Assy	1
26	40506	Jumper Hose, 3/4 x 19"	8
27	42282	Extension Boom Pipe Assy	2
28	40444	RA-10 Raindrop Nozzle (Std.)	11
	40223	RA-15 Raindrop Nozzle (Optional)	11
	41088	RA-6 Raindrop Nozzle (Optional)	11
	42828	Ra-8 Raindrop Nozzle (Optional)	11
	92-3977	Ra-4 Raindrop Nozzle (Optional)	11
29	40999	Clamp Assy	11
30	40997	Adaptor Cap & Seat Gasket Assy	11
	40998	Seat Gasket (f/w 40997)	AR
31	41001	Nozzle Body & Check Valve (Double Barb)	6
32	41002	Nozzle Body & Check Valve (Triple Barb)	1
33	41000	Nozzle Body & Check Valve (Single Barb)	4
	41003	Diaphragm (f/w 41000, 41001, & 41002)	AR

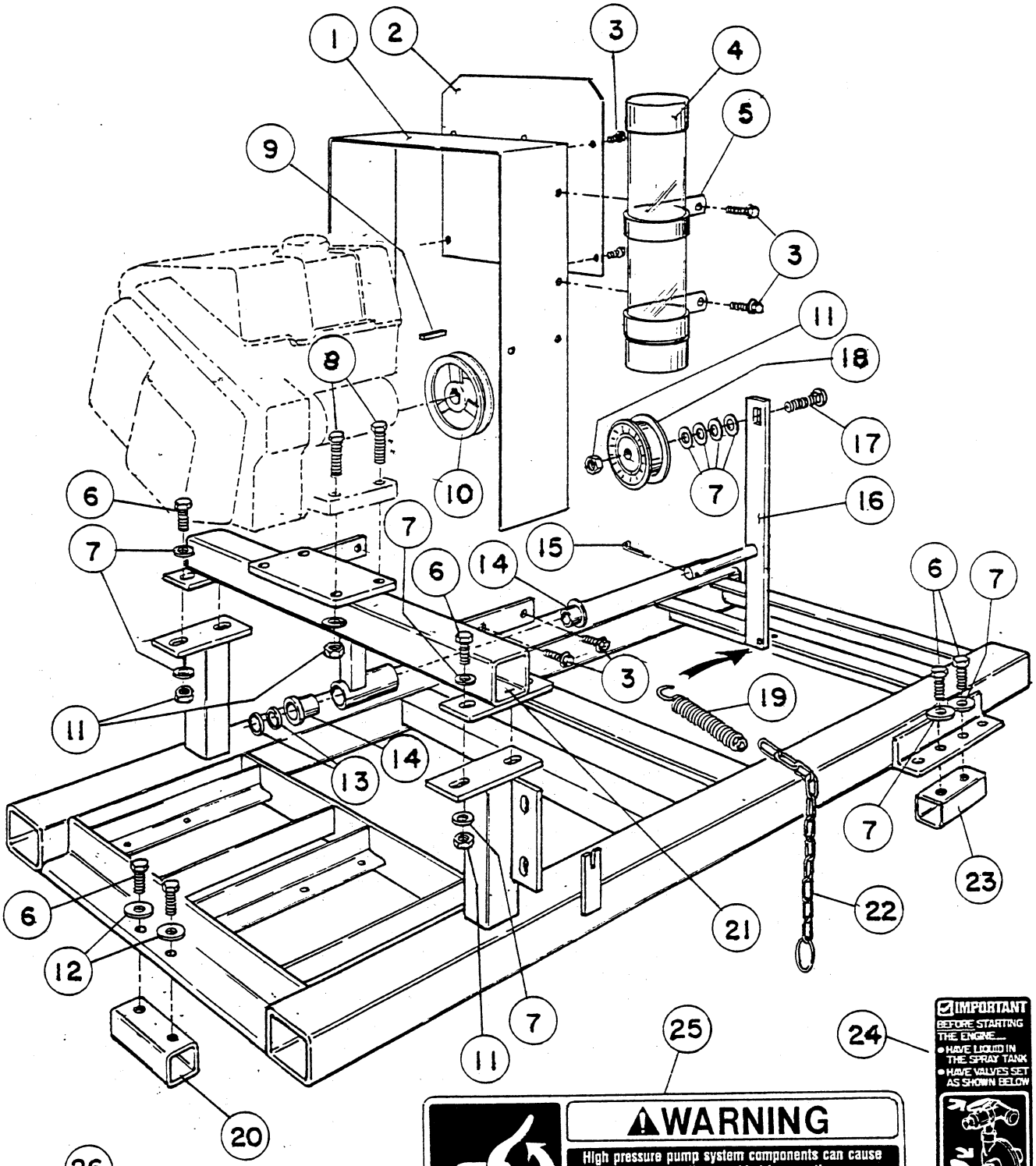

IMPORTANT
BEFORE STARTING THE ENGINE...
- HAVE LIQUID IN THE SPRAY TANK
- HAVE VALVES SET AS SHOWN BELOW

FOR CENTRIFUGAL PUMP OPERATION

FOR DIAPHRAGM PUMP OPERATION

⚠ WARNING

High pressure pump system components can cause personal injury if disassembled incorrectly.

- Shut engine off and release pressure at pump before disconnecting any high pressure components. To release pressure, lift relief valve lever at pump.
- See operator's manual for complete safety and operating procedures.

92-3709

READ YOUR OPERATOR'S MANUAL FOR OPERATING AND SAFETY INSTRUCTIONS. TO GET A REPLACEMENT MANUAL, SEND MODEL AND SERIAL NUMBERS TO: THE TORO CO., 8111 LYNDALE AVE. S., MPLS., MN 55420 — 65-3090

⚠ DANGER

USE EXTREME CAUTION ON HILLS AND SLOPES

TIP OVER CAN CAUSE SERIOUS INJURY OR DEATH

- Never exceed towing or loading vehicle's payload capacity.
- Never exceed 20 MPH towing speed, not for use on highways.
- Place load forward of loading vehicle's rear axle.
- Never operate on steep slopes.
- Move up and down hills, never across the face.
- Never stop or start suddenly on a slope or sharp turns, especially on hills.
- Never drive close to a ditch, creek or drop-off. Stay alert for holes in the terrain and other hidden hazards.
- Read and understand the operator's manual before operating this machine.
- Replacement manuals available by sending complete model number to:

THE TORO COMPANY
8111 Lyndale Avenue
Minneapolis, MN 55420

92-3518

⚠ CAUTION

- TO AVOID PERSONAL INJURY KEEP ALL SHIELDS IN PLACE.
- DISENGAGE AND SHUT OFF ENGINE BEFORE SERVICING OR UNCLOGGING MACHINE.
- KEEP HANDS, FEET AND CLOTHING AWAY FROM POWER-DRIVEN PARTS.

87-0450

SKID FRAME

REF.	PART NO.	DESCRIPTION	QTY.
1	92-0213	Belt Guard Assy	1
2	92-0218	Belt Shield	1
3	34-140 AMVD	Hex Washer Hd Self-Tap Screw, 1/4 NC x 5/8"	11
4	42559	Manual Storage Tube	1
5	42560	Storage Tube Bracket	2
6	20-47-AGD	HHCs, 3/8 NC x 1"	10
7	24-11-AD	Flat Washer, 3/8	16
8	20-50-AD	HHCS, 3/8 NC x 1-3/4"	4
9	92-0049	Square Key, 3/16 x 1-1/4"	1
10	41390	Engine Pulley	1
11	22-13-AJD	Hex Nut, 3/8 NC	9
12	356308	Special Washer	2
13	358042	Special Washer	2
14	41347	Flange Bearing (f/w Engine Frame Assy)	2
15	28-19-D	Cotter Pin, 1/8 x 1-1/4"	1
16	92-0208	Idler Arm Assy	1
17	25-49-AGD	Carriage Bolt, 3/8 NC x 1-3/4"	1
18	41353	Idler Pulley	1
19	41721	Spring	1
20	92-0216	Spacer - Front	1
21	92-0200	Engine Frame Assy	1
22	92-0211	Chain Assy	1
23	92-0217	Spacer - Rear	2
24	92-0239	Decal - "Before Starting the Engine"	1
25	92-3709	Decal - "High Pressure Pump Systems",etc...	1
26	65-3090	Decal - "Read Your Operator's Manual",etc..	1
27	92-3518	Decal - "DANGER"	1
28	87-0450	Decal - "To Avoid Personal Injury",etc	1

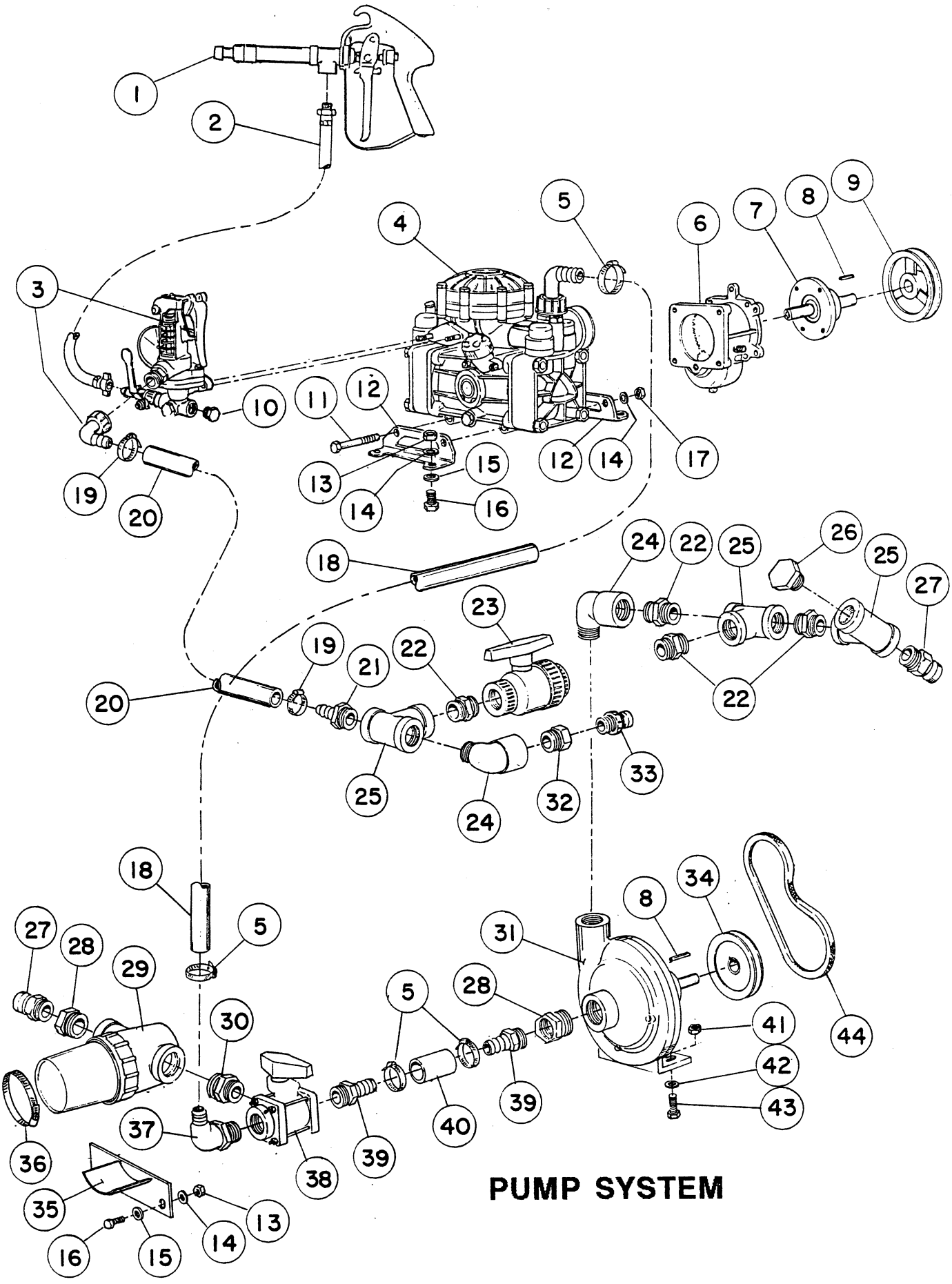
1
2
3
4
5
6
7
8
9
10
11
12
13
14
15
16
17
18
19
20
21
22
23
24
25
26
27
28
29
30
31
32
33
34
35
36
37
38
39
40
41
42
43
44

PUMP SYSTEM

PUMP SYSTEM

REF.	PART NO.	DESCRIPTION	QTY.
1	92-0337	Hand Gun - High Pressure	1
2	92-0353	Hose Assy - Hand Gun (25 Ft Hi-PSI)	1
3	92-0230	Pump Control Unit	1
4	92-0220	Diaphragm Pump	1
5	21146	Hose Clamp, 1" Hose	4
6	92-0229	Gear Reduction Unit	1
7	92-0223	Extension Flange Ass'y.	1
	92-0228	Flange Bearing (f/w 92-0223 Assy)	1
8	92-0049	Sq. Key, 3/16 x 1-1/4"	3
9	41390	Pump Pulley - Diaphragm	1
10	92-0314	Pipe Plug	1
11	92-0231	Bolt - Metric	2
12	92-0221	Pump Base Bracket	2
13	22-12-AJD	Hex Nut, 5/16 NC	6
14	23-10-GD	Lock Washer, 5/16	8
15	24-10-BD	Flat Washer, 5/16 S.A.E.	6
16	20-26-AGD	HHCS, 5/16 NC x 1"	6
17	92-0232	Hex Nut - Metric	2
18	92-0242	Suction Jumper Hose, 1" I.D. x 17"	1
19	92-0045	Hose Clamp, 3/4" Hose	2
20	92-0243	Overflow Jumper Hose, 3/4 I.D. x 9 1/2"	1
21	92-0236	Hose Barb, 1" MPT x 3/4 HB	1
22	41304	Close Nipple, 1" MPT	4
23	40020	Ball Valve, 1" NPT	1
24	41307	90 St. Elbow, 1" NPT	2
25	41305	Tee, 1" NPT	3
26	41315	Hex Plug, 1" MPT	1
27	40479	Male Qwik Adaptor, 1" MPT	2
	41318	Dust Cap	2
28	92-0052	Reducer Bushing, 1 1/4 MPT x 1" FPT	2
29	42701	Suction Strainer	1
	42702	Strainer Screen (f/w 42701)	AR
	42703	Strainer Gasket (f/w 42701)	AR
30	42992	Reducer Nipple, 1 1/4" MPT x 1" MPT	1
31	97802	Centrifugal Pump	1
32	41306	Reducer Bushing, 1" MPT x 1/2" FPT	1
33	40486	Male Qwik Adapter, 1/2" MPT	1
	41317	Dust Cap	1
34	40198	Pump Pulley - Centrifugal	1
35	92-0233	Strainer Bracket Assy.	1
36	92-0054	Hose Clamp	1
37	41140	90 Elbow, 1" MPT x 1" HB	1
38	92-0237	2-Way Ball Valve, 1" NPT	1
39	92-0012	Hose Barb, 1" MPT x 1" HB	2
40	92-0240	Suction Jumper Hose, 1" I.D. x 3"	1
41	22-13-AJD	Hex Nut, 3/8 NC	2
42	23-11-GD	Lock Washer, 3/8	2
43	20-48-AD	HHCS, 3/8 NC x 1-1/4"	2
44	41711	Drive Belt	1

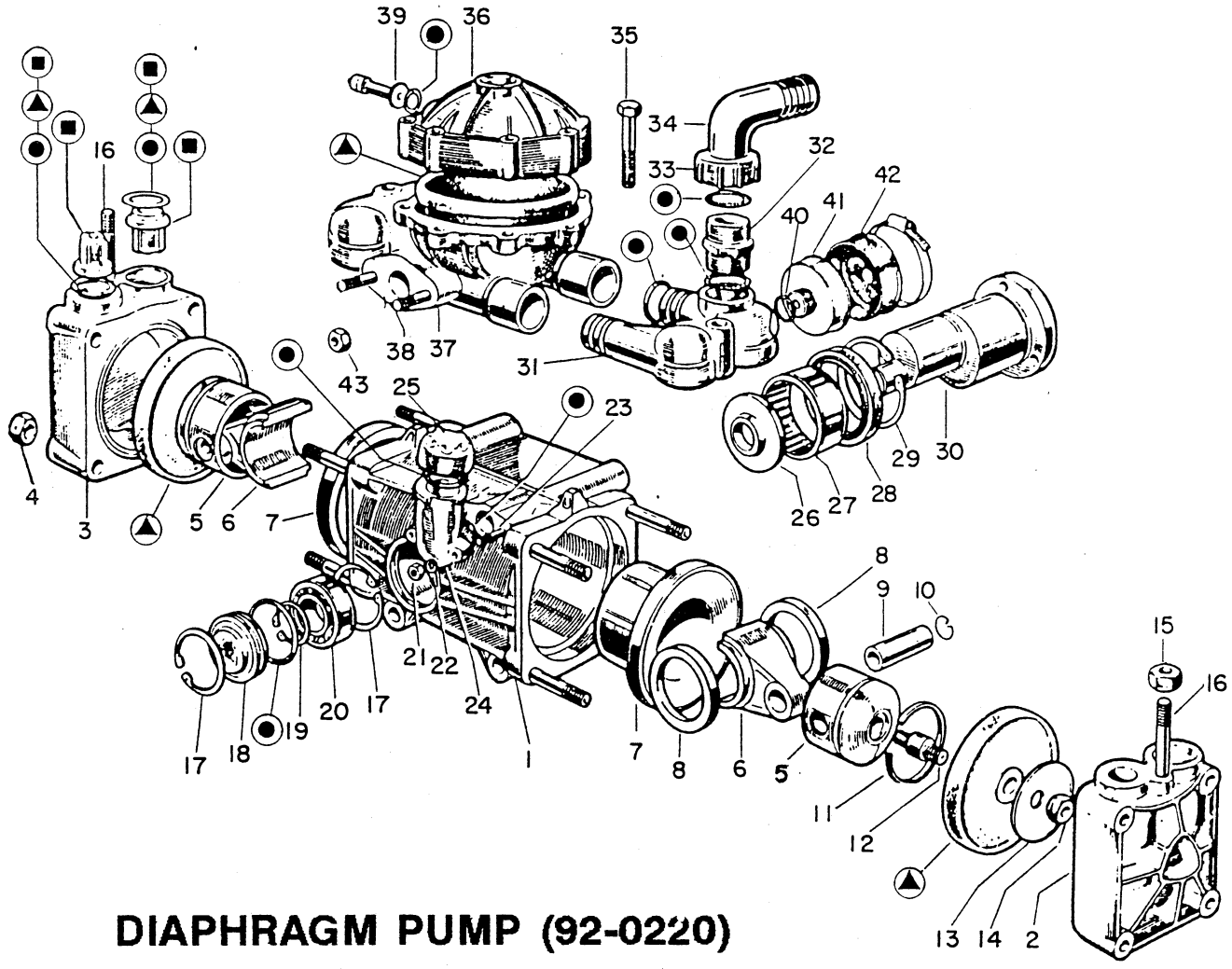

DIAPHRAGM PUMP (92-0220)

DIAPHRAGM PUMP (92-0220)

REF.	PART NO.	DESCRIPTION	QTY.
1	92-3531	Pump Body	1
2	92-3532	Head Assy (Right Hand)	1
3	92-3533	Head Assy (Left Hand)	1
4	92-3534	Nut (12 MA)	8
5	92-3535	Piston	2
6	92-3536	Connecting Rod	1
7	92-3537	Piston Sleeve	2
8	92-3538	Retainer Ring	2
9	92-3539	Connecting Rod Pin	2
10	92-3540	Retaining Ring	4
11	92-3541	Piston Ring	2
12	92-3542	Retaining Belt	2
13	92-3543	Retaining Washer	2
14	92-3544	Lock Nut	2
15	92-3545	Nut (10 MA)	2
16	92-3546	Stud	2
17	92-3547	Retainer Ring	1
18	92-3548	Oil Sealing Cap	1
19	92-3549	Retaining Ring	1
20	92-3550	Ball Bearing	2
21	92-3551	Nut	2
22	92-3552	Washer	2
23	92-3553	Stud	1
24	92-3554	Oil Sight Glass	1
25	92-3555	Cap for Oil Sight Glass	1
26	92-3556	Spacer Washer	1
27	92-3557	Roller Bearing	1
28	92-3558	Seal	1
29	92-3559	Retainer Ring	1
30	92-3560	Crankshaft	1
31	92-3561	Manifold	1
32	92-3562	Threaded Adapter	1
33	92-3563	Barb Nut	1
34	92-3564	Hose Barb	1
35	92-3565	Bolt (8 MA x 40)	8
36	92-3566	Accumulator Head	1
37	92-3567	Accumulator Manifold	1
38	92-3568	Stud	2
39	92-3569	Air Valve	1
40	92-3570	Damper Body	1
41	92-3571	Damper Diaphragm	1
42	92-3572	Clamp	1
43	92-3573	Nut	2

Repair and Maintenance Kits

● Denotes Parts Included in #92-3611 O-Ring Kit

▲ Denotes Parts Included in #92-3612 Diaphragm Parts Kit

■ Denotes Parts Included in #92-3613 Valve Parts Kit

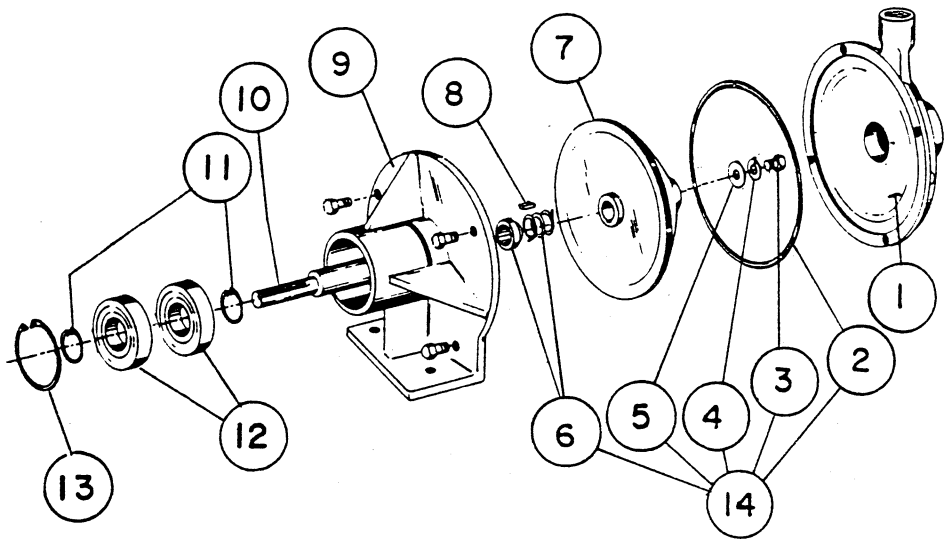

CENTRIFUGAL PUMP (97802)

REF.	PART NO.	DESCRIPTION	QTY.
1	27475	Volute	1
2	27489	O-Ring	1
3	27484	Cap Screw, 5/16 x 1/2 Stnl. Steel	1
4	27485	Lock Washer, 5/16 Stainless Steel	1
5	27487	Flat Washer, 5/16 Stainless Steel	1
6	27478	Shaft Seal	1
	41740	Optional Heavy-Duty Seal	1
7	27482	Impeller	1
8	27486	Square Key, 3/16 x 1/2 Stnl. Steel ...	1
9	27476	Frame	1
10	27477	Shaft, Stainless Steel	1
11	27483	Lock Ring	1
12	27479	Bearing	2
13	27480	Lock Ring	1
14	27490	Repair Kit	AR

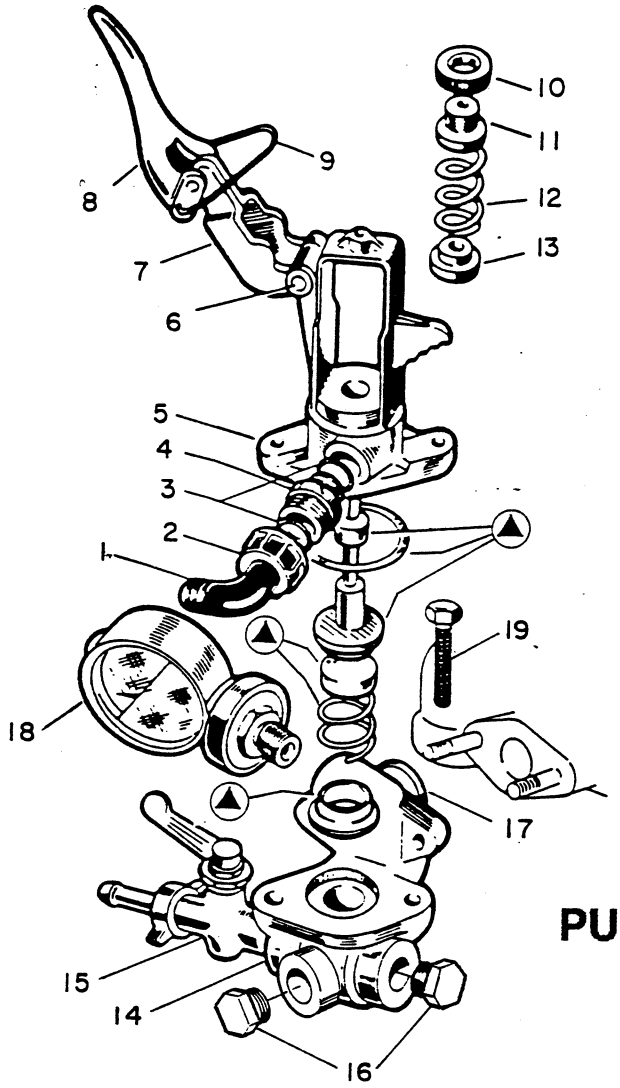

PUMP CONTROL (92-0230)

REF.	PART NO.	DESCRIPTION	QTY.
1	92-3574	Hose Barb	1
2	92-3575	Barb Nut	1
3	92-3576	O-Ring	2
4	92-3577	Threaded Adapter	1
5	92-3578	Tension Spring Housing	1
6	92-3579	Pin	2
7	92-3580	Lever Guide	1
8	92-3581	Relief Valve Lever	1
9	92-3582	Locking Clip	1
10	92-3583	Pressure Adjustment Nut	1
11	92-3584	Threaded Guide	1
12	92-3585	Tension Spring	1
13	92-3586	Tension Spring Retainer	1
14	92-3587	Relief Valve Body	1
15	92-0339	Ball Valve	1
16	92-3589	Plug	1
17	92-3590	O-Ring	1
18	92-3591	Pressure Gauge (Oil Filled)	1
19	92-3597	Hex Hd Bolt (8 MA x 25)	1

Repair and Maintenance Kit

▲ Denotes Parts Included in #92-3614 Control Unit Parts Kit

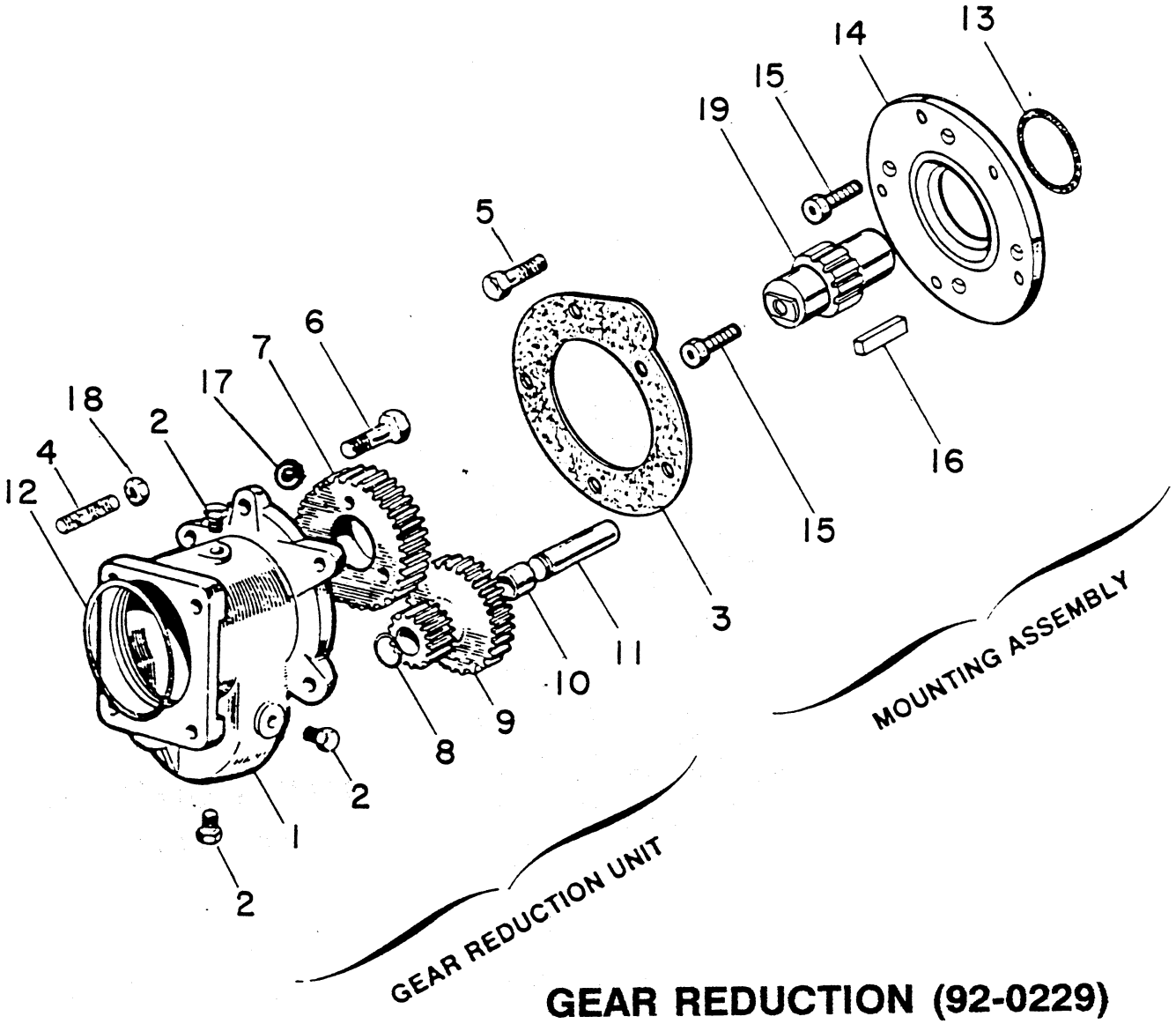

GEAR REDUCTION (92-0229)

REF.	PART NO.	DESCRIPTION	QTY.
1	92-3593	Gear Case	1
2	92-3594	Plug	4
3	92-3595	Gasket	1
4	92-3596	Stud	4
5	92-3597	Hex Hd Bolt (8 MA x 25)	5
6	92-3598	Bolt for Driven Gear	3
7	92-3599	Driven Gear	1
8	92-3600	O-Ring	1
9	92-3601	Idler Gear	1
10	92-3602	3-Piece Bearing Assy	1
11	92-3603	Shaft	1
12	92-3604	O-Ring	1
13	92-3605	O-Ring (for Mounting Flange)	1
14	92-3606	Mounting Flange	1
15	92-3607	Allen Hd Bolt	5
16	92-3608	Engine Shaft Key	1
17	92-3609	Lock Washer	3
18	92-3610	Nut	4
19	92-0229	Drive Gear Assy	1

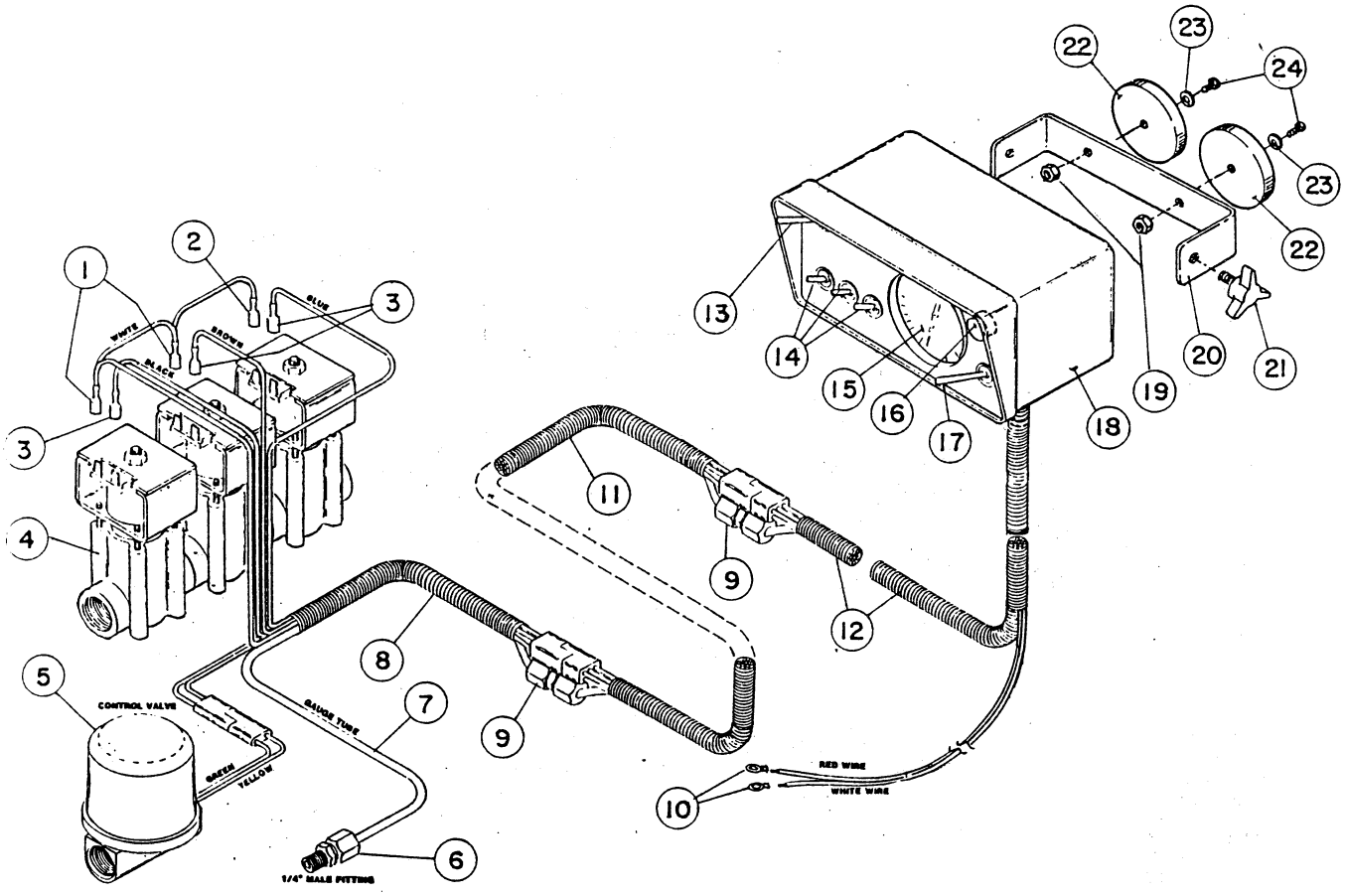

SPRAYER CONTROL

REF.	PART NO.	DESCRIPTION	QTY.
1	42933	12-10 AWG Female Terminal	2
2	42934	16-14 AWG Female Terminal	1
3	42932	Insulated Female Terminal	3
4	42870	Solenoid Valve	1
5	42936	Control Valve	1
6	42931	Male Fitting	1
7	42930	Tubing	1
8	42935	72" Cable Assy (Solenoid Hook-Up)	1
9	42929	Union Fitting	2
10	42313	Ring Terminal, 3/8	2
11	92-0257	144" Extension Cable Assy	1
12	42928	96" Cable Assy (Enclosure Hook-Up) ...	1
13	42923	Master Switch	1
14	42921	Boom Switch	3
15	42924	Pressure Gauge (PSI)	1
16	42925	Fuse Holder	1
	42926	15-AMP Fuse	1
17	42927	Pressure Adjust Switch	1
18	42937	Console	1
19	22-11-AJD	HEX NUT, 1/4 NC	2
20	42920	Mounting Bracket	1
21	42922	Knob	2
22	92-0256	Magnet	2
23	23-9-GD	Lock Washer, 1/4	2
24	20-2-AGD	HHCS, 1/4 NC x 5/8"	2

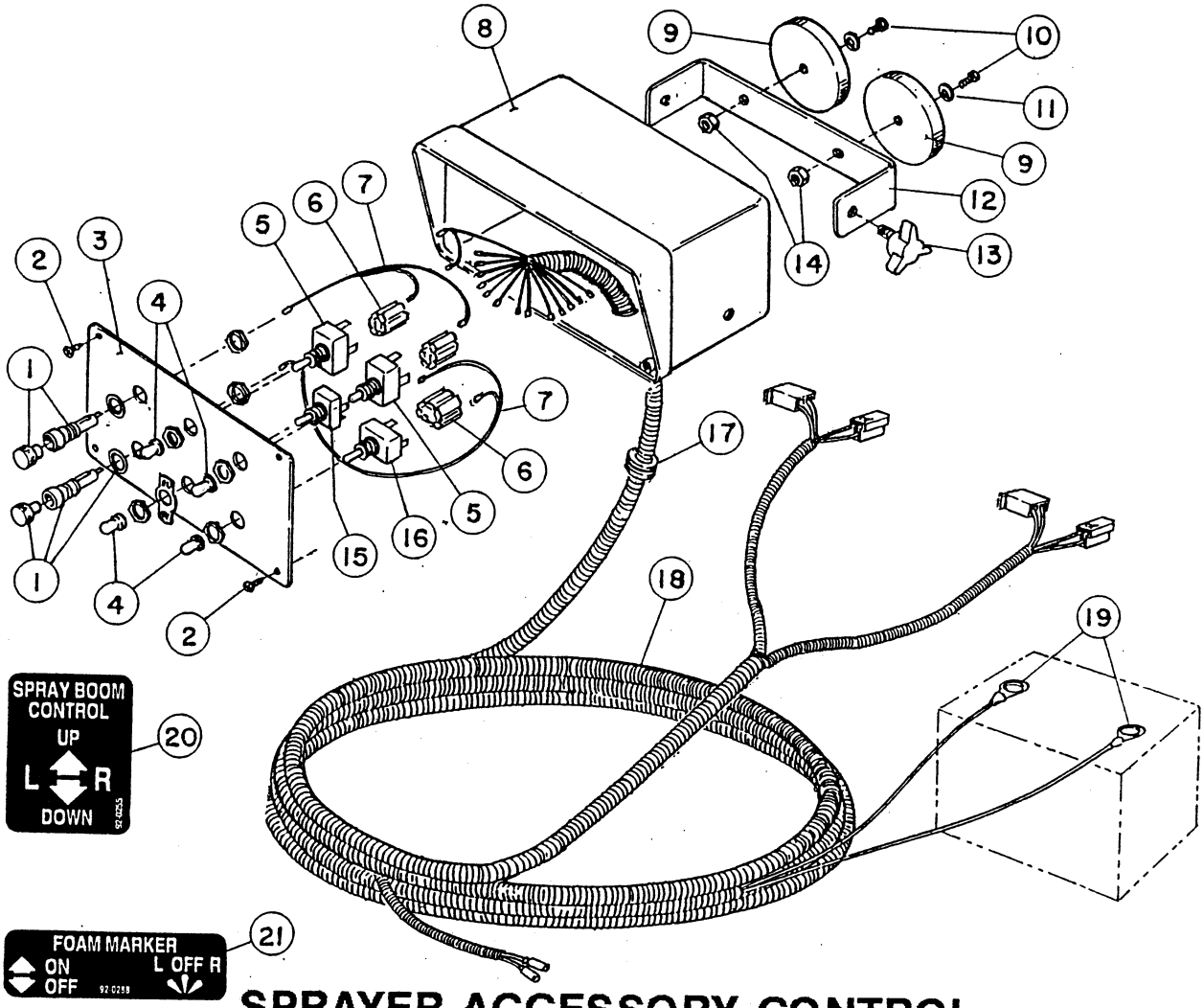

SPRAYER ACCESSORY CONTROL

REF.	PART NO.	DESCRIPTION	QTY.
1	92-0251	Fuse Holder	2
	92-0289	30-Amp Fuse (Upper)	1
	92-0290	10-Amp Fuse (Lower)	1
2	34-74-EOD	Self-Tap Screw, #8 x 3/8"	4
3	92-0249	Front Panel	1
4	30955	Rubber Boot	4
5	30954	Relief Valve Switch (Actuator)	2
6	92-0253	Switch Connector	3
7	92-0352	Jumper Wire	2
8	92-0248	Console Enclosure	1
9	92-0256	Magnet	2
10	20-2-AGD	HHCS, 1/4 NC x 5/8	2
11	23-9-GD	Lock Washer, 1/4	2
12	42920	Mounting Bracket	1
13	42922	Knob	2
14	22-11-AJD	Hex Nut, 1/4 NC	2
15	30953	Valve Switch (Foamer Compressor)	1
16	92-0250	Toggle Switch (Foamer Solenoid)	1
17	92-0254	Wire Loom Clip	1
18	92-0252	Wiring Harness Assy	1
19	42313	Ring Terminal, 3/8" I.D.	2
20	92-0255	Decal - Boom Controls	1
21	92-0288	Decal - Foam Marker	1