FORM NO. 92-0343

TORO

MODEL NO. 41013-30101 & UP

SET-UP AND PARTS LIST

DIGITAL SPEEDOMETER KIT

FOR USE ON THE MULTI-PRO 1100 & 5200 VEHICLES

The Operator Instructions furnished with the SPEED-O-METER in this Kit are the generalized instructions for the installation of the SPEED-O-METER. The paper parts bag included with this kit provides the extra parts necessary to install the SPEED-O-METER on the MULTI-PRO Vehicles. The specific instructions for installation are as follows:

FOR USE ON THE MULTI-PRO 5200 VEHICLE

MOUNTING THE DISPLAY CONSOLE:

- Remove the mounting bracket from the console by unscrewing knobs at each side. Set the rubber washers and knobs aside.
- Mount the bracket in the two holes provided in the dash panel, using two 1/4" bolts as shown in FIG. 1.
- Put rubber washers back in place on console. Insert console into bracket so that bracket ends are outside the rubber washers. Screw in knobs and adjust to angle desired.
- Feed the power, speed sensor and RPM cables and frame ground wire into the grommet (in parts bag) and insert the grommet into the large hole provided in the dash panel.
- Route the power cable toward the coolant temperature gauge and the speed sensor cable toward the Vehicle's left-front wheel.

NOTE: The RPM sensor cable is NOT USED on the MULTI-PRO installation.

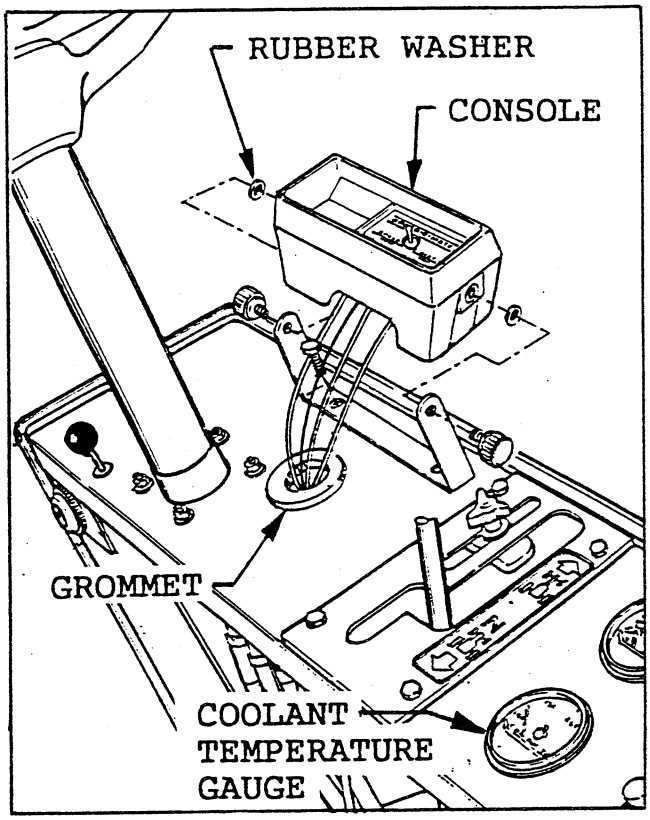

FIG. 1

ELECTRICAL INSTALLATION:

- Connect the power cable's RED wire to the "I" terminal on the coolant temperature gauge. See FIG. 2.
- Connect the power cable's BLACK wire to the the "GND" terminal on the coolant temperature gauge.

CAUTION! Do not allow the power cable's RED and BLACK wires to make contact with one another!

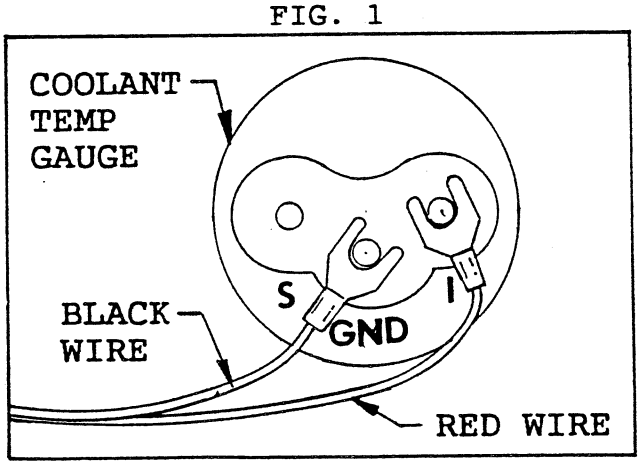

FIG. 2

©The Toro Company-1993

MOUNTING THE MAGNETIC SENSOR:

The magnet clip (in parts bag) has been modified for use on the MULTI-PRO Vehicle. See FIG. 3.

■ Place the magnet against the stop at the end of the clip (longest dimension of magnet should be turned in the direction of turning wheel.

■ Attach the magnet to the clip using epoxy or similar high quality adhesive. Use a cable tie to further secure the magnet to the clip and help prevent the magnet from being dislodged by field debris.

■ Mount the magnet clip to the inside of the Vehicle's left-front wheel. Use the 7/16" bolt, lock washer and nut (in parts bag) to secure the clip to one of the square holes in the wheel rim. See FIG. 4.

MOUNTING SPEED SENSOR BRACKET:

■ Turn one 3/8" locking nut onto the sensor and insert the sensor into the large hole in the mounting bracket as shown in FIG. 4. and turn on remaining lock nut. Adjust nuts until the tip of the sensor extends a minimum of 1/4 inch beyond the locking nut.

■ Position the mounting bracket so that as the wheel rotates, the magnet passes across the tip of the speed sensor and there is a 1/4 to 1/2 inch space between them.

■ Secure the mounting bracket to the yoke arm, using a 1/4" bolt,flat washer, lock washer and nut, as shown in FIG. 5.

■ If necessary, adjust the extension of the speed sensor to maintain the 1/4" to 1/2" space between the sensor tip and the magnet.

■ When distance is set, turn both lock nuts tight to hold sensor in place. The tip of the speed sensor must be directly over the magnet, but does not have to be exactly perpendicular.

■ Secure sensor cable to the vehicle frame with cable ties. Place first tie as close to sensor assembly as possible.

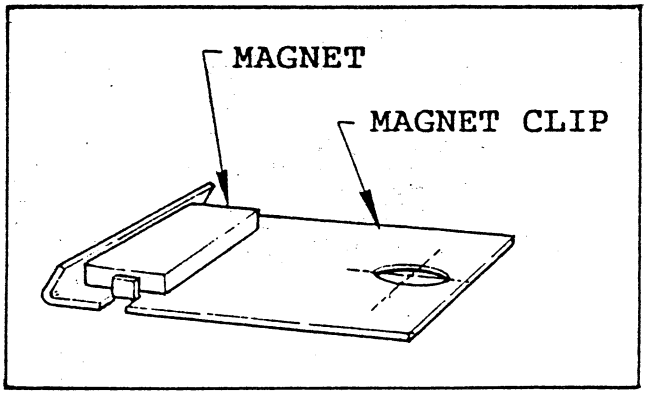

FIG. 3

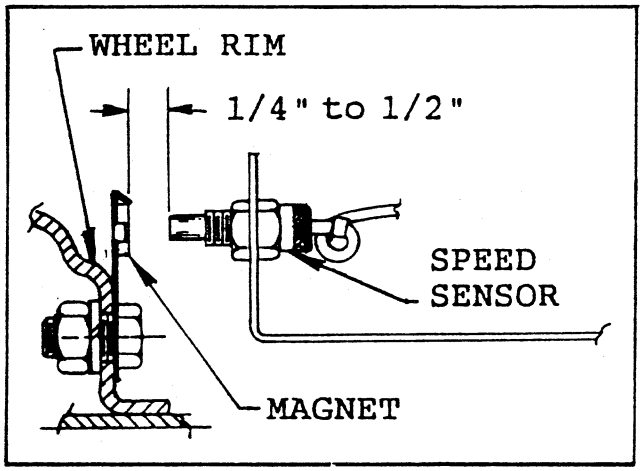

FIG. 4

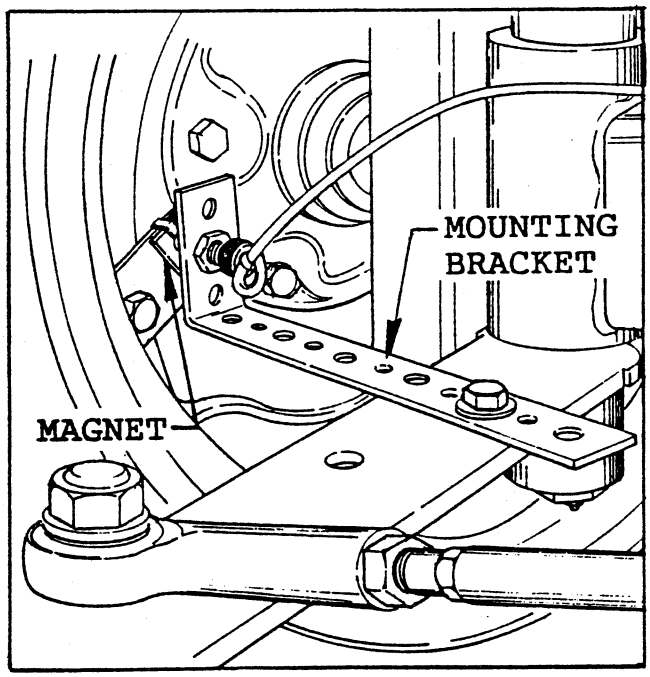

FIG. 5

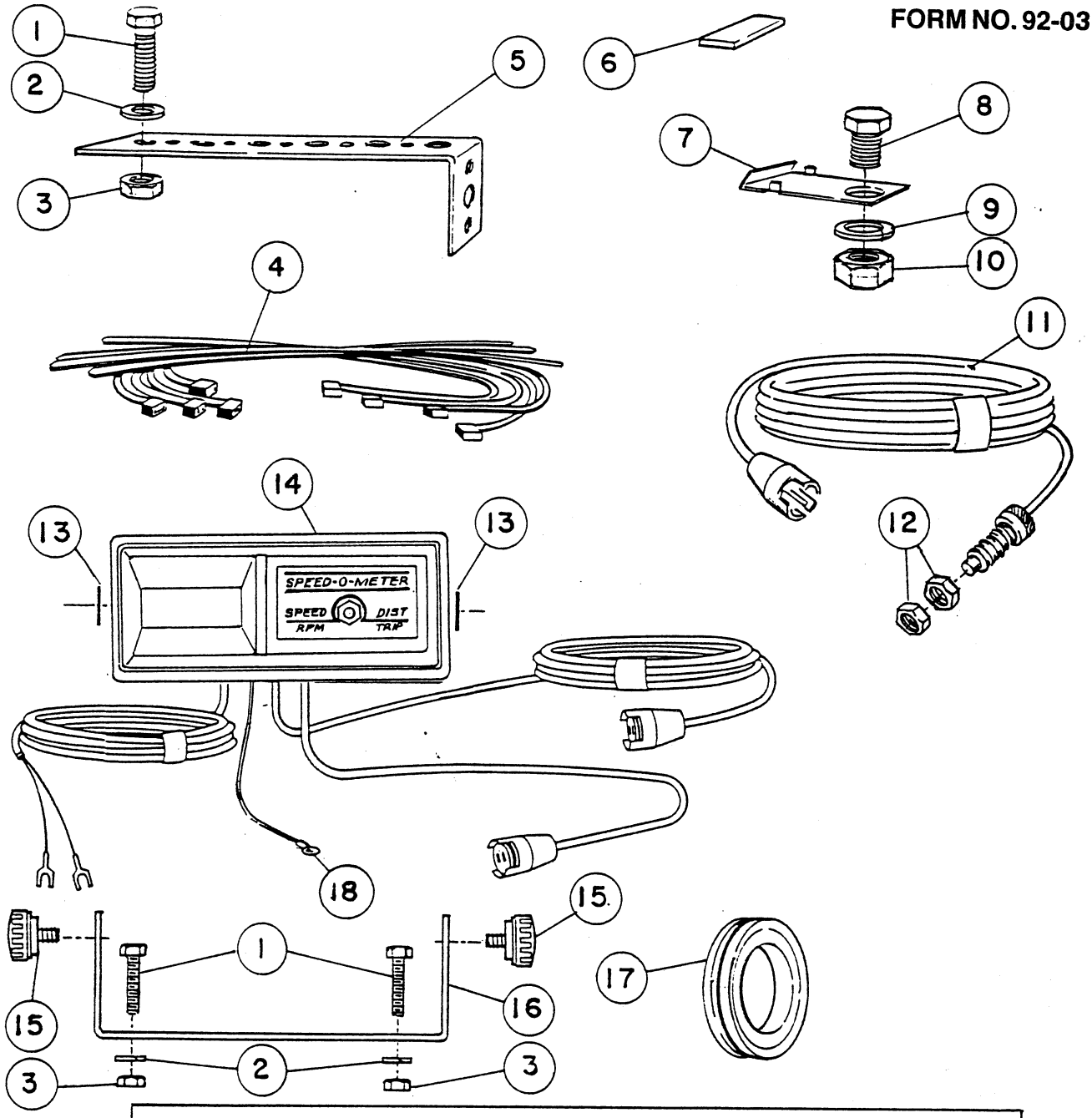

REF	PART NO.	DESCRIPTION	QTY
1	20-5-AD	HHCS, 1/4 NC x 1"	3
2	23-9-GD	Lock Washer, 1/4"	3
3	22-11-AJD	Hex Nut, 1/4" NC	3
4	95672	Cable Tie	AR
5	92-0120	Speed Sensor Mounting Bracket	1
6	92-0122	Magnet	1
7	92-0121	Magnet Clip	1
8	20-64-AD	HHCS, 7/16 NC x 3/4"	1
9	23-12-GD	Lock Washer, 7/16"	1
10	22-14-AJD	Hex Nut, 7/16 NC	1
11	92-0119	Speed Sensor Cable w/ Sensor & Connector	1
12	22-13-AJKD	Hex Nut, 3/8 NC	2
13	92-0118	Rubber Washer	2
14	ORDER MODEL NO. 41013 DIGITAL SPEEDOMETER KIT-COMPLETE		1
15	92-0117	Console Knob	2
16	92-0116	Console Mounting Bracket	1
17	40764	Grommet	1
18	92-3530	Ring Terminal, 5/16"	1

FOR USE ON THE MULTI-PRO 1100 VEHICLE

MOUNTING THE DISPLAY CONSOLE:

■ Remove the mounting bracket from the console by unscrewing knobs at each side. Set the rubber washers and knobs aside.

■ Mount the bracket in the two holes provided in the console, using two 1/4" bolts, and lock washers as shown in FIG. 6.

■ Put rubber washers back in place on console. Insert console into bracket so that bracket ends are outside the rubber washers. Screw in knobs and adjust to angle desired.

■ Feed the power, speed sensor and RPM sensor cables and the frame ground wire into the grommet (in parts bag) and insert the grommet into the large hole provided in the front of the Vehicle console.

NOTE: The RPM sensor cable is NOT USED in the MULTI-PRO installation.

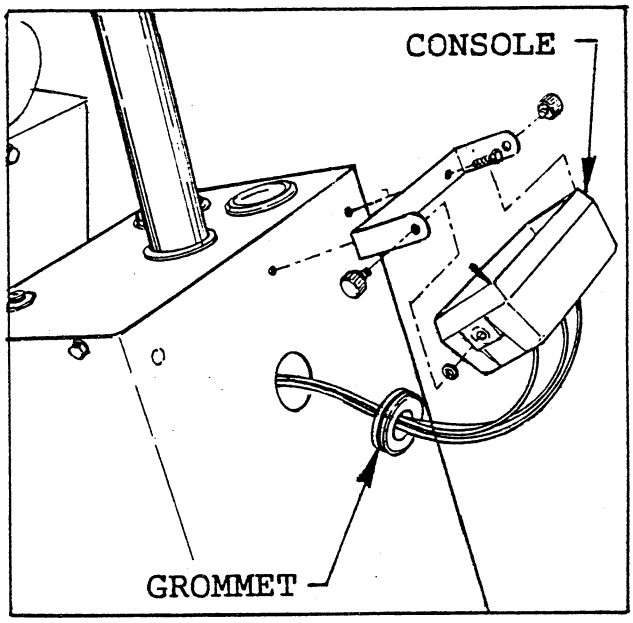

FIG. 6

ELECTRICAL INSTALLATION:

■ Remove the back panel of the Vehicle console and route the power cable to the inside of the console. Note the Vehicle wiring harness shown in FIG. 7.

■ Remove approx. 1/4" of the insulation and crimp the ring terminal to the blue frame ground wire.

■ Remove the nut securing the Vehicle's ground wire. Attach the BLUE ground wire and the power cable's BLACK wire as shown in FIG. 7. Replace the nut.

■ Place the GREEN wire of the Vehicle's wiring harness into the splice tap (in parts bag) as shown in FIG. 8.

■ Cut the spade terminal from the end of the power cable's RED wire and insert it into the splice tap until it bottoms in the closed end of the tap.

■ Use a pair of pliers to squeeze down the metal insert and snap the cover in place.

■ Route the speed sensor cable to the inside of the Vehicle console, through the hole in the floor board, to the left-rear wheel.

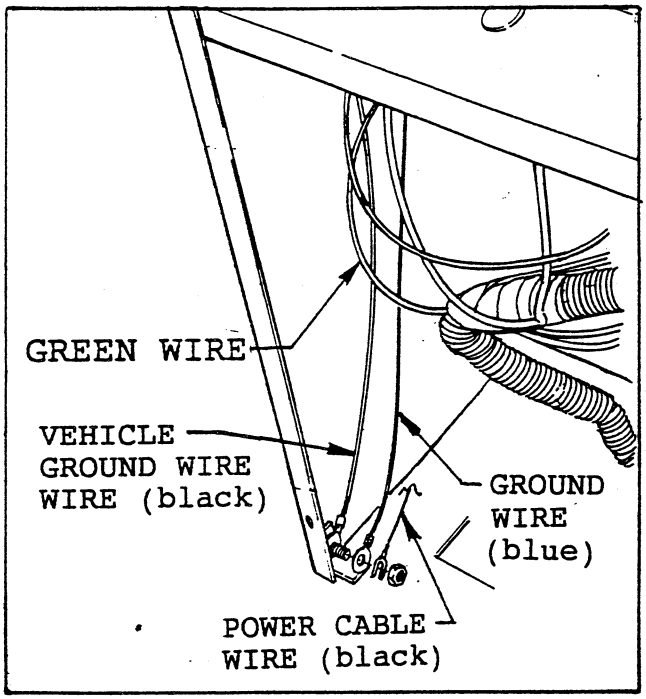

FIG. 7

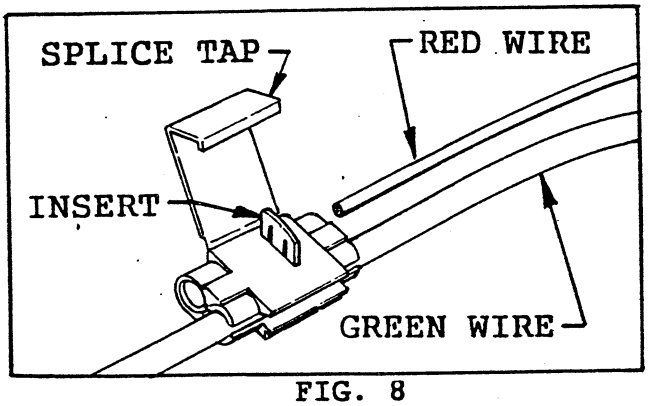

FIG. 8

MOUNTING THE MAGNETIC SENSOR:

The magnet clip (in parts bag) has been modified for use on the MULTI-PRO Vehicle. See FIG. 9.

■ Place the magnet against the stop at the end of the clip (longest dimension of magnet should be turned in the direction of turning wheel).

■ Attach the magnet to the clip, using epoxy or similar high quality adhesive. Use a cable tie to further secure the magnet to the clip, to help prevent the magnet from being dislodged by field debris.

■ Mount the magnet clip to the inside of the Vehicle's left-rear wheel. Use the 7/16" bolt, lock washer and nut (in. parts bag) to secure the clip to one of the square holes in the wheel rim. See FIG. 10.

MOUNTING THE SPEED SENSOR BRACKET:

■ Turn one 3/8" locking nut onto the sensor and insert the sensor into the large hole in the mounting bracket as shown in FIG. 10 and turn on remaining lock nut. Adjust nuts until the tip of the sensor extends a minimum of 1/4 inch beyond the locking nut.

■ Position the mounting bracket so that as the wheel rotates, the magnet passes across the tip of the speed sensor and there is a 1/4 to 1/2 inch space between them.

■ Secure the mounting bracket to the lug on the Vehicle frame with a 1/4" bolt, flat washer, lock washer and nut as shown in FIG. 11.

If necessary, adjust the extension of the speed sensor to maintain the 1/4" to 1/2" space between the sensor tip and the magnet

■ When distance is set, turn both lock nuts tight to hold sensor in place. The tip of the speed sensor must be directly over the magnet, but does not have to be exactly perpendicular.

■ Secure sensor cable to the vehicle frame with cable ties. Place first tie as close to sensor assembly as possible.

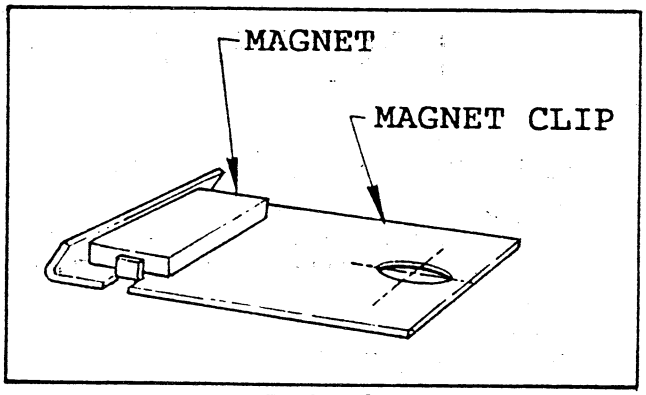

FIG. 9

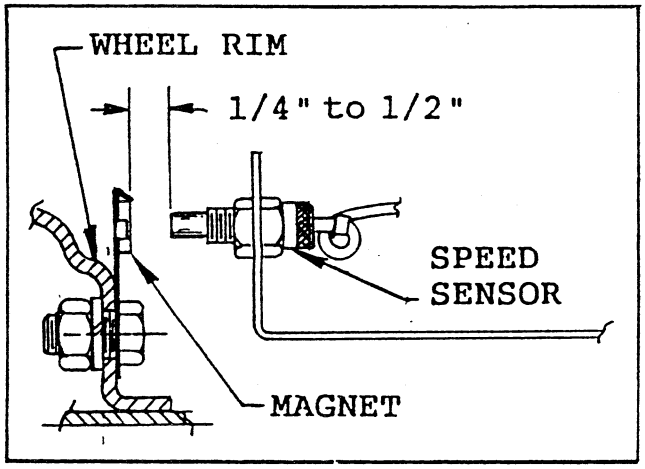

FIG. 10

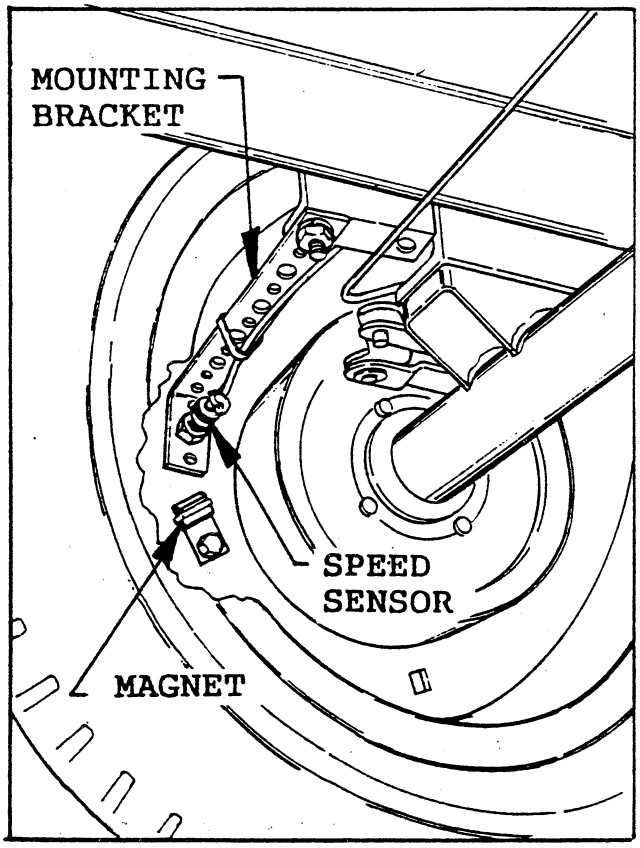

FIG. 11